Lecture 23
Phasors – 9 of 9

design examples

Example: Find C so maximize the magnitude of $i(t)$. What is the current?

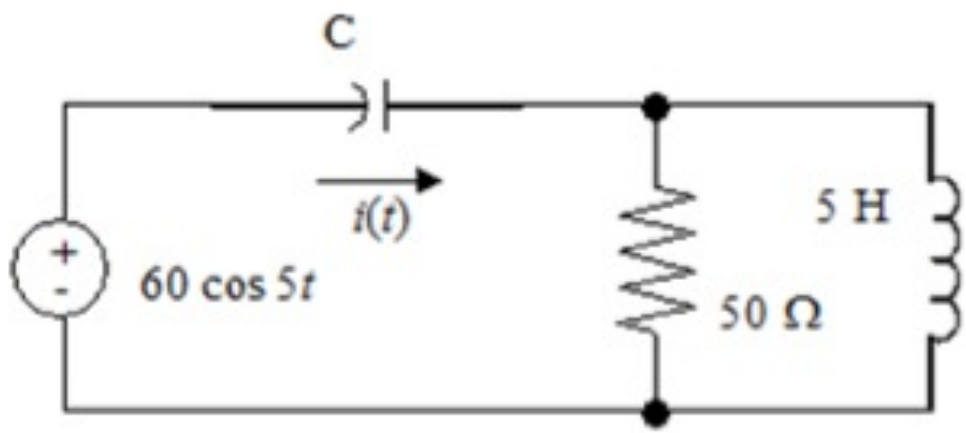

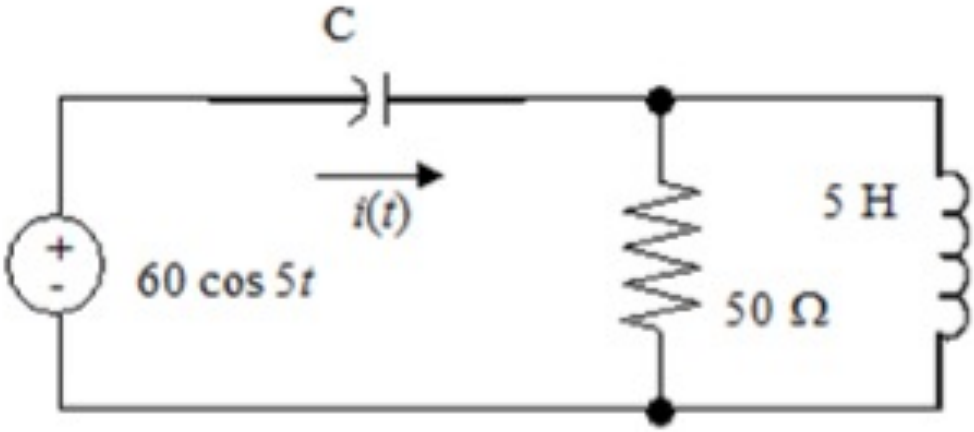

$0.01\ F; 6\cos 5t\ \ A$

Example: Find the resistor R* so that the magnitude of the current $i(t)$ is 1 A.

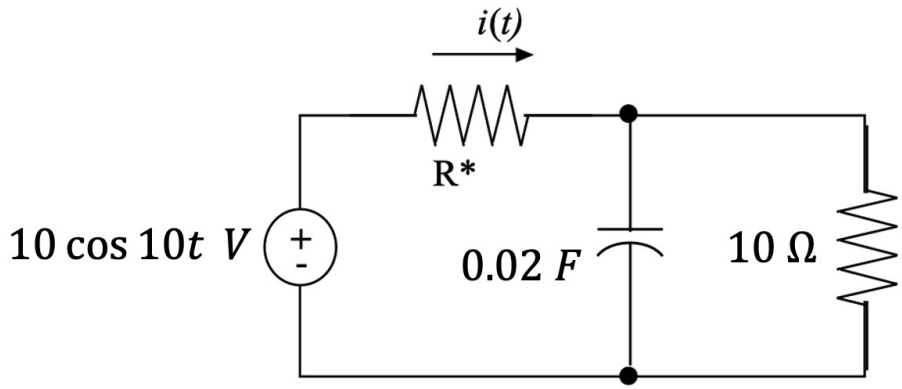

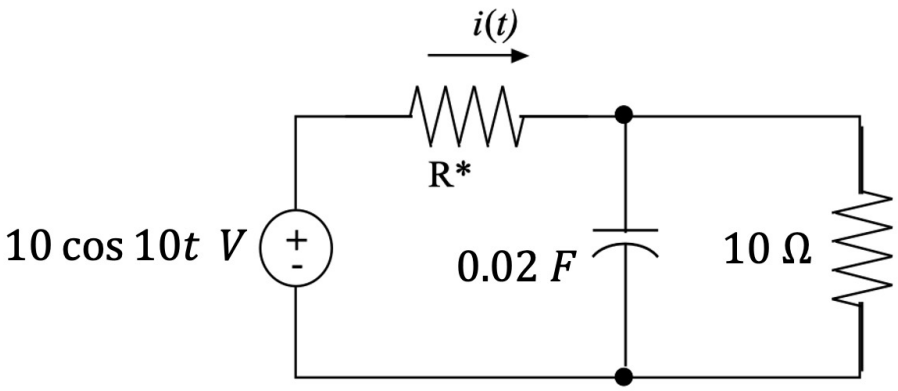

7.17 Ω

Example: Find the inductor value to maximize the magnitude of the voltage appearing across the capacitor. What is that magnitude?

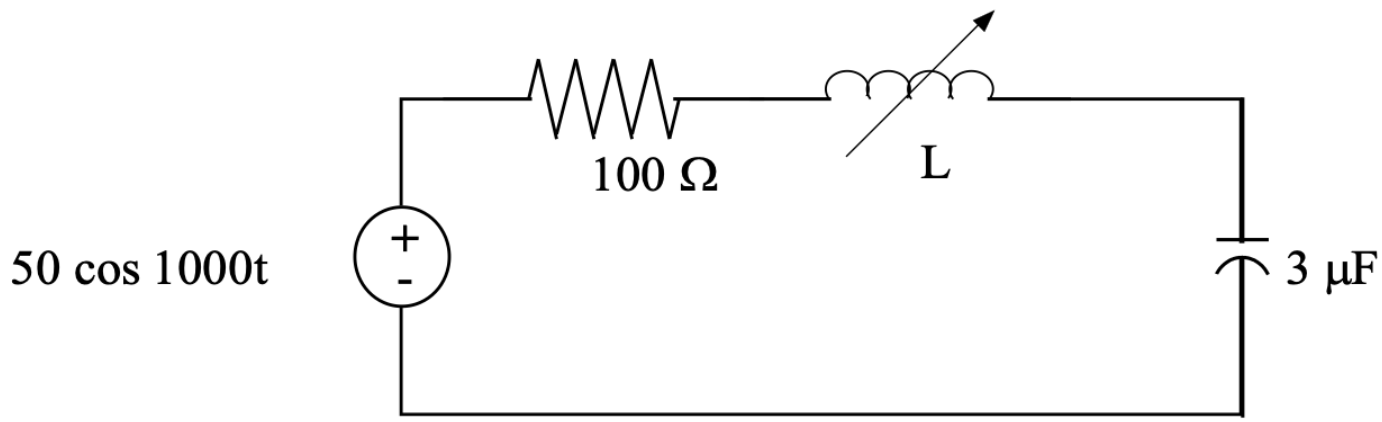

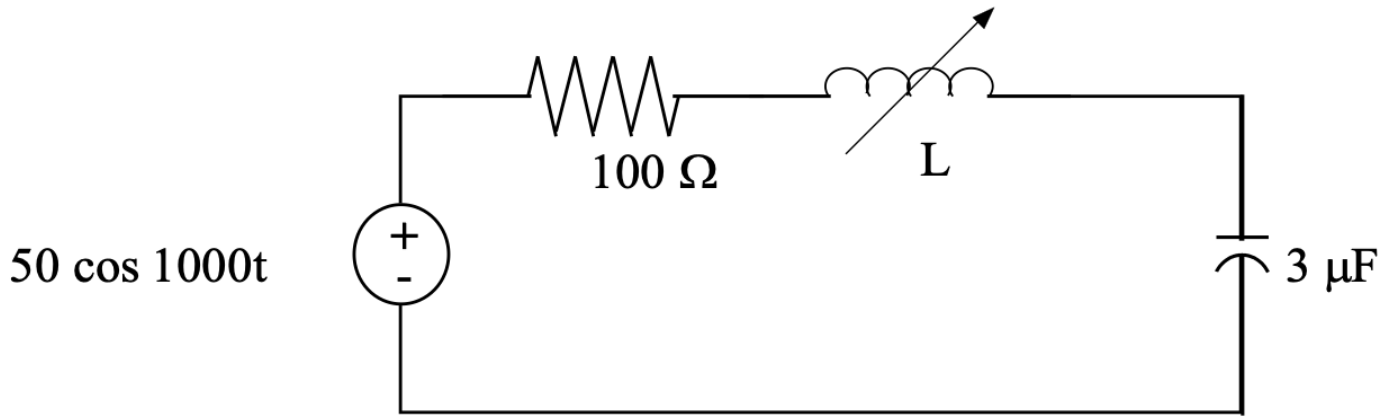

$\frac{1}{3}H, 167$ V

Example: what value for resistor R_1 results in the two currents, i_1 and i_2, having the same <u>magnitude</u> (but might be different phase angles)? What is that magnitude?

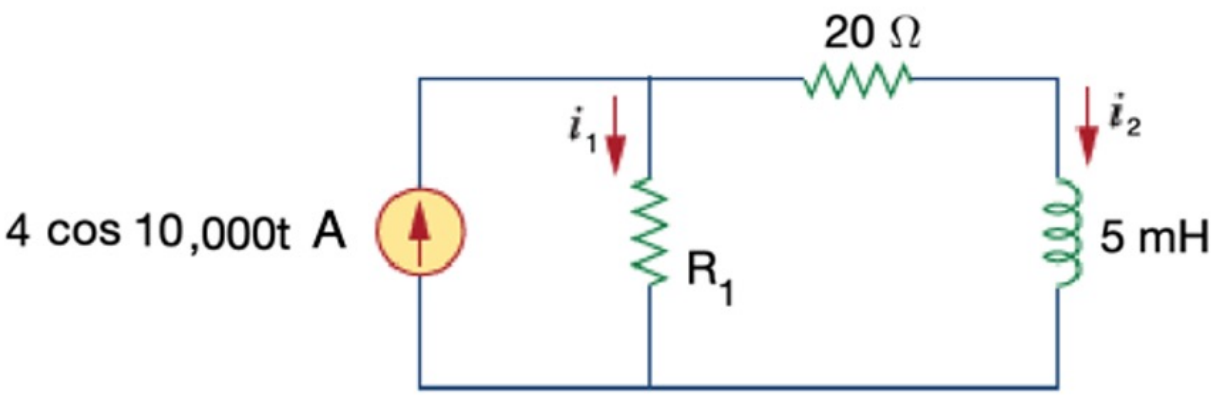

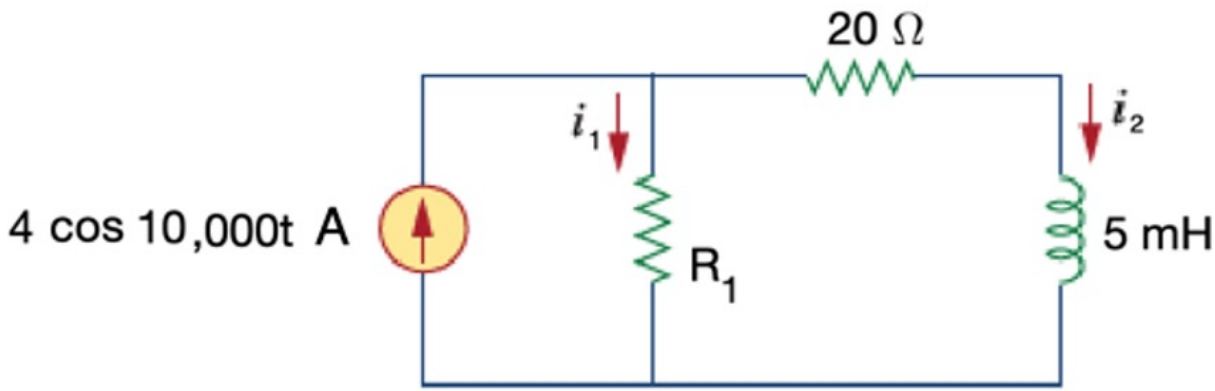

53.9 Ω; 2.42 A

Practice problem: find the inductor value so that the current i is "in phase" with the voltage source. What is $i(t)$?

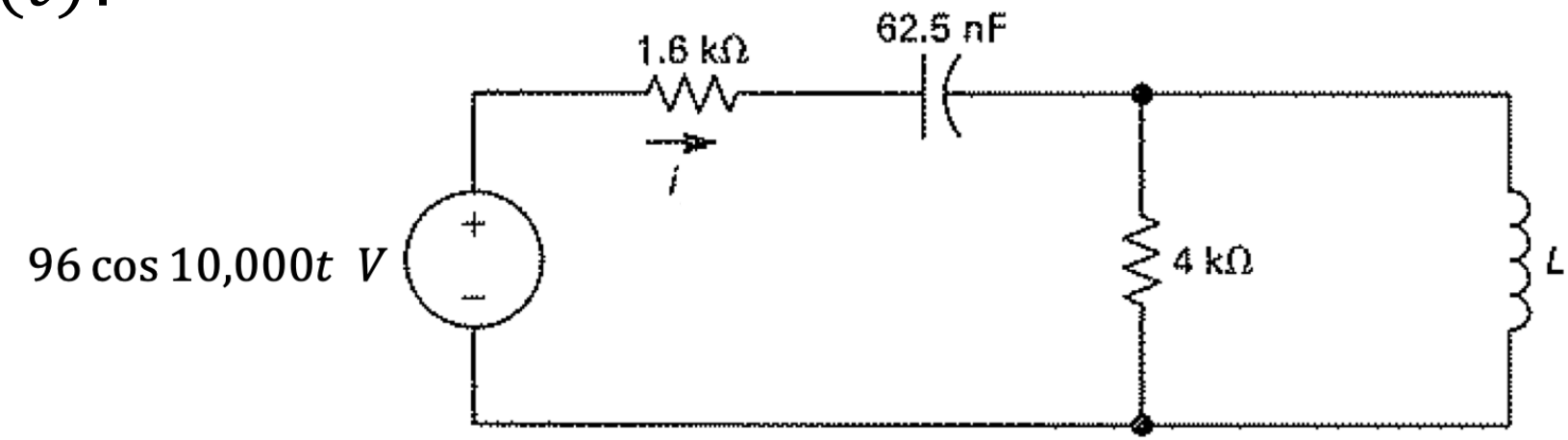

$0.8\ H, 20\cos(10{,}000t)\ mA;\ 0.2\ H, 405\cos(10{,}000t)\ mA$

Practice problem: find the capacitor value to maximize the magnitude of the voltage appearing across the capacitor. What is that magnitude?

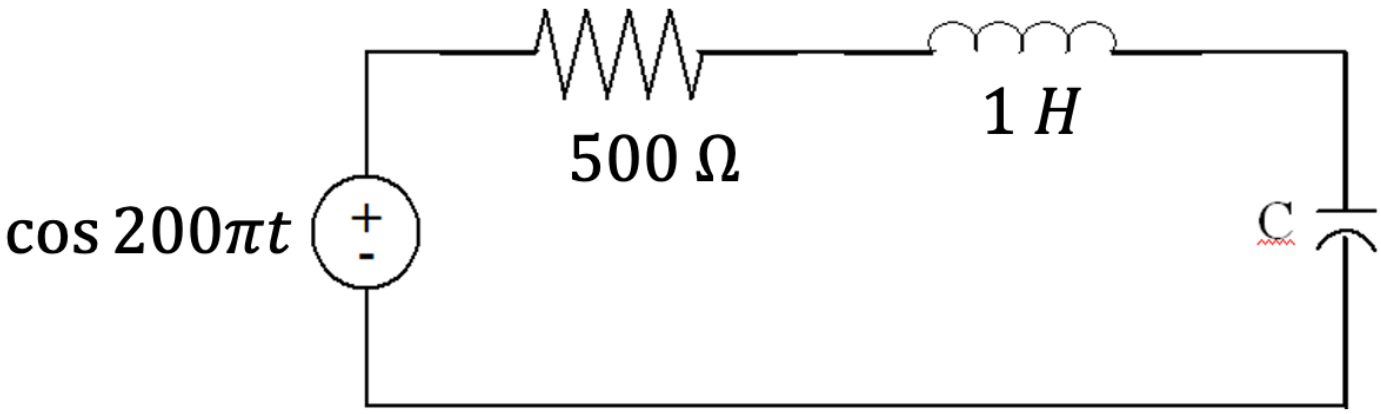

$1.55\ \mu F, 1.61\ V$