Lecture 23
Phasors – 9 of 9

design examples

Example: Find C so maximize the magnitude of $i(t)$. What is the current?

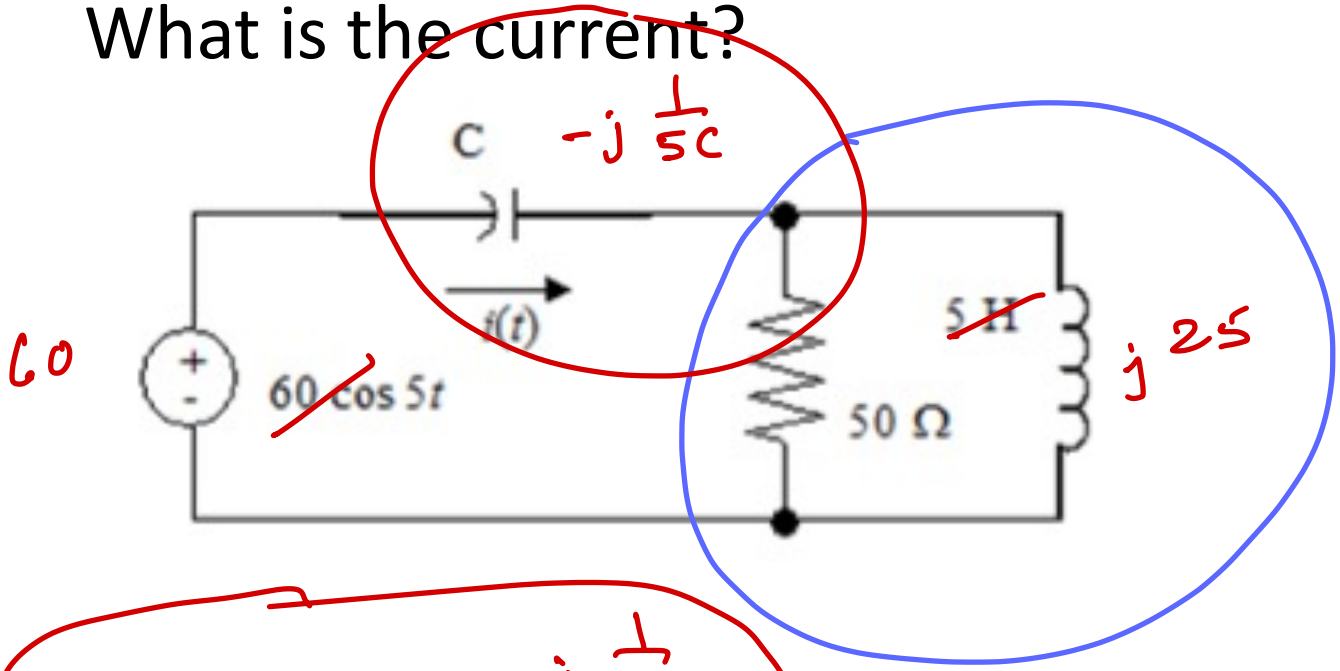

$$\frac{50 \cdot j25}{50 + j25} = \frac{j50}{\cancel{25j}} \frac{(2-j)}{\cancel{(2-j)}}$$

$$= j10(2-j)$$

$$= 10 + j20$$

$$Z = 10 + j20 - j\frac{1}{5C}$$

$$I = \frac{60}{Z}$$

$$|I| = \frac{60}{|Z|}$$

minimize $|Z|$

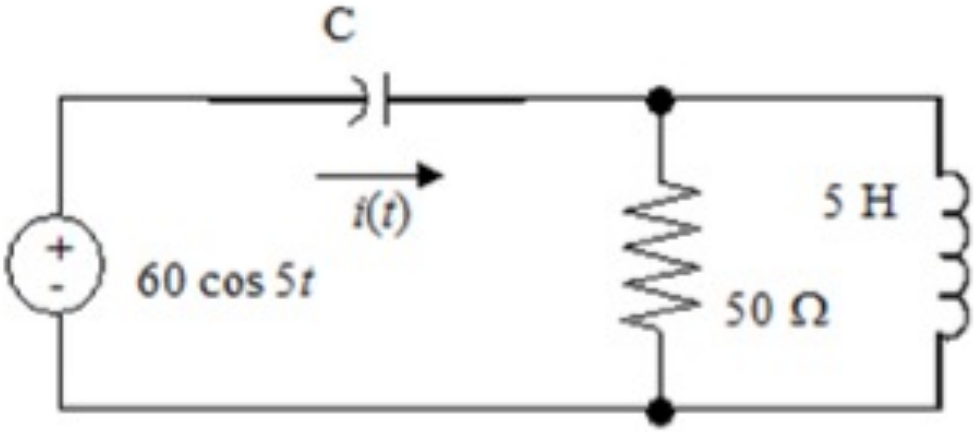

$$Z = 10 + j20 - j\frac{1}{5C}$$

$$|Z| = \sqrt{100 + \left(20 - \frac{1}{5C}\right)^2}$$

$$\min_{C} \quad 100 + \left(20 - \frac{1}{5C}\right)^2$$

$$20 = \frac{1}{5C}$$

$$\boxed{C = \frac{1}{100}\ F}$$

$$I_{max} = 6\ A$$

$0.01\ F;\ 6\cos 5t\ \ A$

Example: Find the resistor R* so that the magnitude of the current $i(t)$ is 1 A.

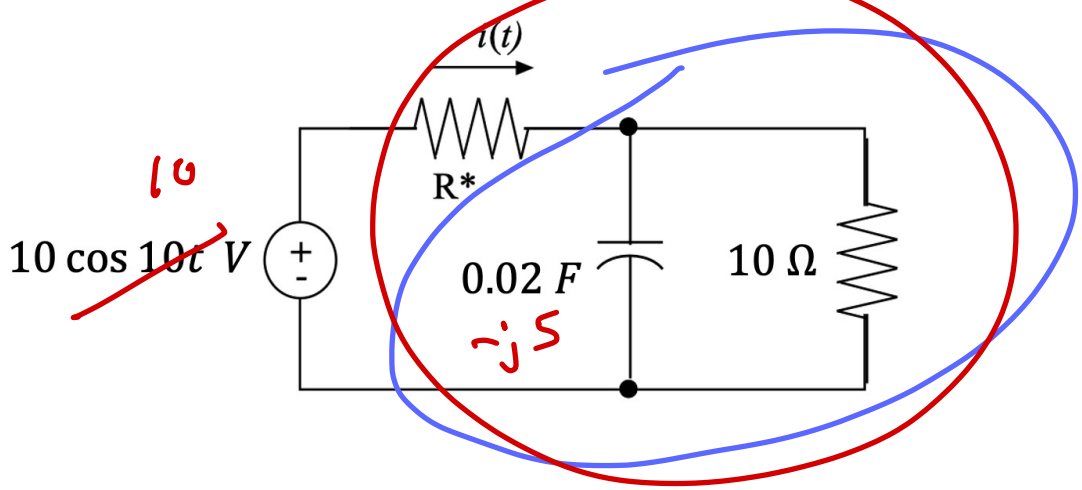

$$\frac{(10)(-j5)}{10-j5} = \frac{-j10}{2-j}\,\frac{(2+j)}{(2+j)} = -j2(2+j) = 2-j4$$

$$Z = R^* + 2 - j4$$

$$I = \frac{10}{R^* + 2 - j4}$$

$$|I| = \frac{10}{\sqrt{(R^*+2)^2 + 16}} = 1$$

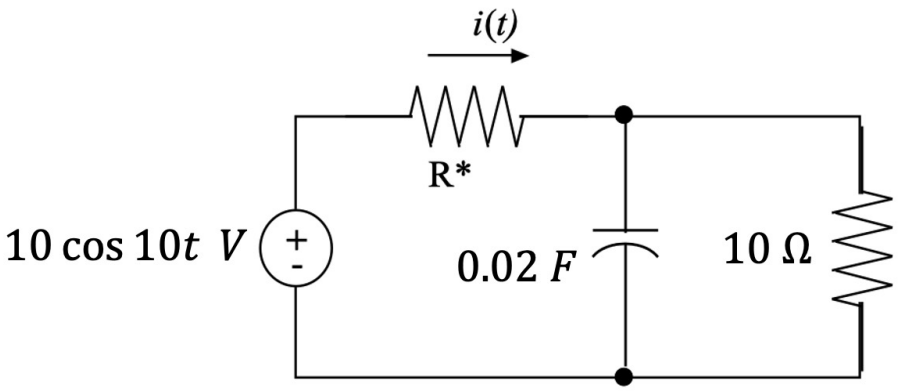

$$\frac{10}{\sqrt{(R^*+2)^2+16}} = 1$$

$$\sqrt{(R^*+2)^2+16} = 10$$

$$(R^*+2)^2+16 = 100$$

$$(R^*+2)^2 = 84$$

$$R^*+2 = \pm\sqrt{84}$$

$$R^* = \pm\sqrt{84} - 2$$

$$\pm 9.17 - 2$$

$$R^* = 9.17 - 2$$

7.17 Ω

Example: Find the inductor value to maximize the magnitude of the voltage appearing across the capacitor. What is that magnitude?

$-j\,\dfrac{10^4}{3\cdot 1000}$

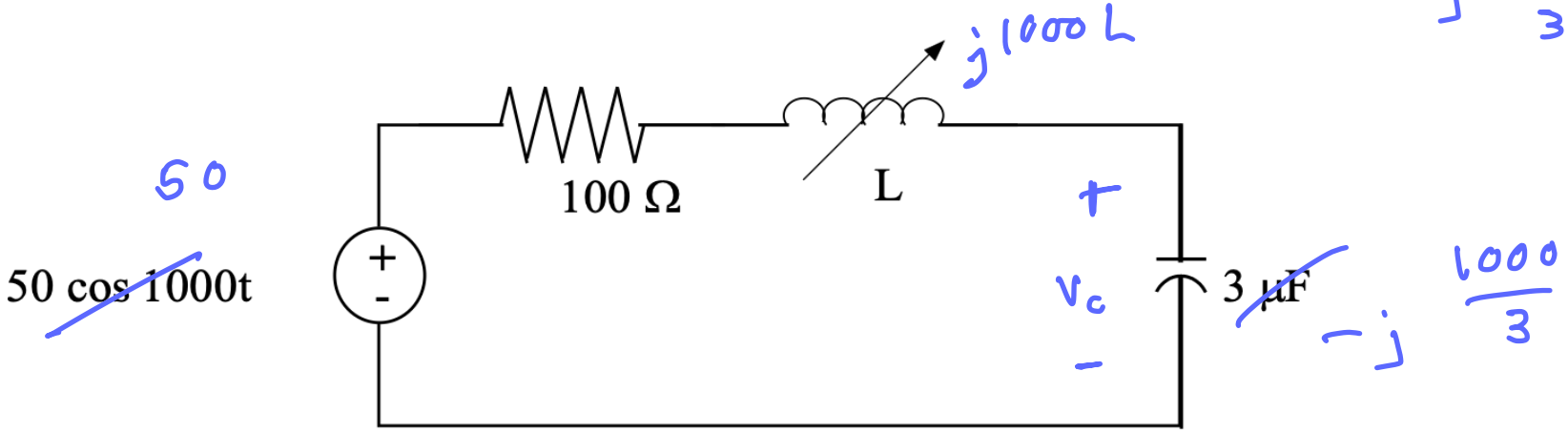

$$V_c = 50\cdot\frac{-j\,1000/3}{-j\,1000/3 + j1000L + 100}$$

$$V_c = \frac{-j\,50{,}000}{300 + j(3000L - 1000)}$$

50 cos 1000t

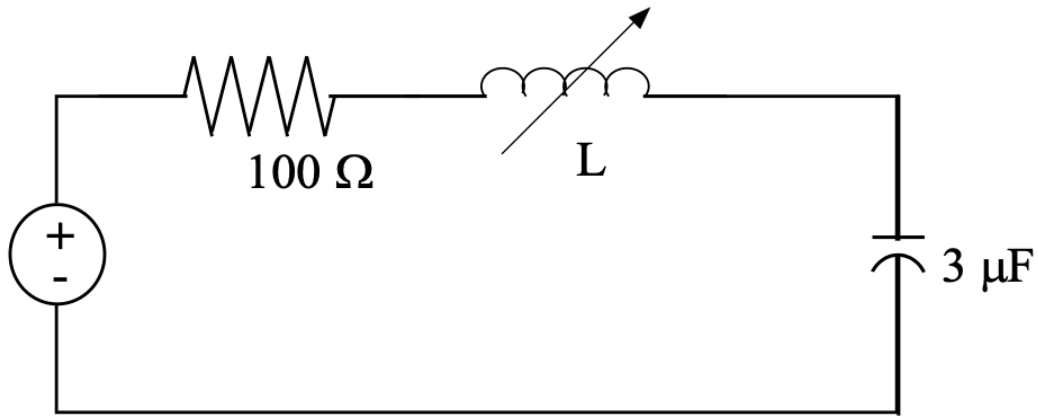

$$|V_c| = \left| \frac{-j\,50{,}000}{300 + j(3000L - 1000)} \right| = \frac{50{,}000}{\sqrt{300^2 + (3000L - 1000)^2}}$$

$L = 1/3$

$$\max_L = \frac{50{,}000}{300} = \frac{500}{3}$$

$\frac{1}{3}H, 167$ V

Example: what value for resistor R_1 results in the two currents, i_1 and i_2, having the same magnitude (but might be different phase angles)? What is that magnitude?

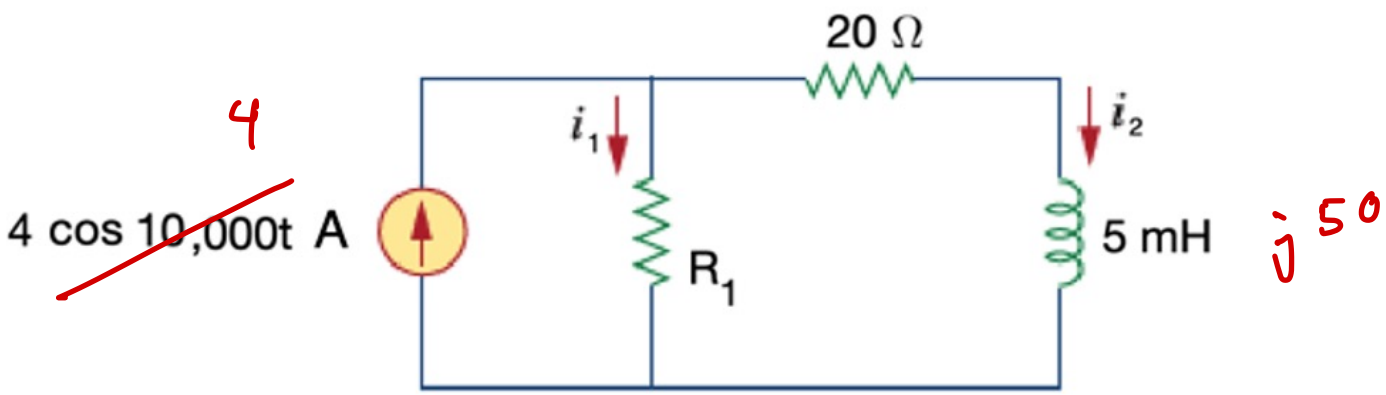

$$I_1 = 4 \cdot \frac{20 + j50}{R_1 + 20 + j50} \qquad I_2 = 4 \cdot \frac{R_1}{R_1 + 20 + j50}$$

$$|I_1| = 4 \cdot \frac{\sqrt{400 + 2500}}{\sqrt{(R_1 + 20)^2 + 2500}} \qquad |I_2| = 4 \cdot \frac{R_1}{\sqrt{(R_1 + 20)^2 + 2500}}$$

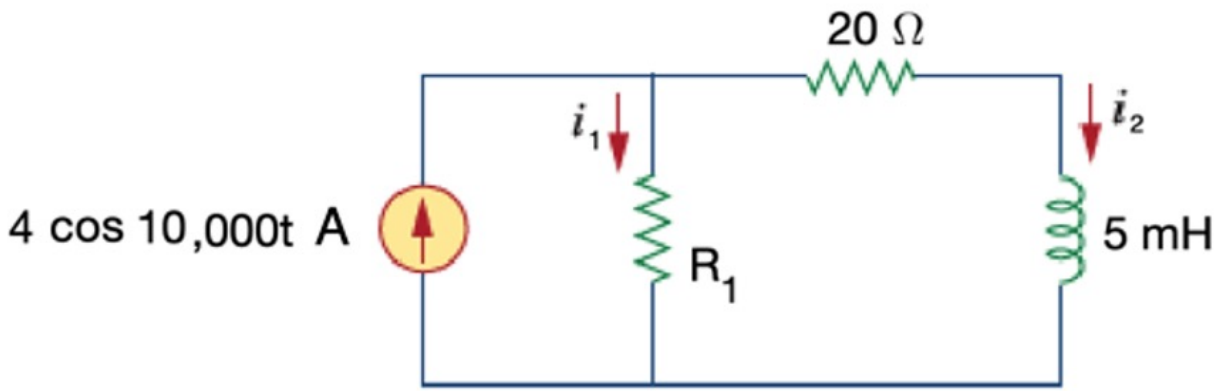

$$\cancel{4}\cdot\frac{\sqrt{400+2500}}{\sqrt{\cancel{(R_1+20)^2}+2500}} = \cancel{4}\cdot\frac{R_1}{\sqrt{\cancel{(R_1+20)^2}+2500}}$$

$$R_1 = \sqrt{400+2500} = \sqrt{2900}$$

53.9 Ω; 2.42 A

Practice problem: find the inductor value so that the current i is "in phase" with the voltage source. What is $i(t)$?

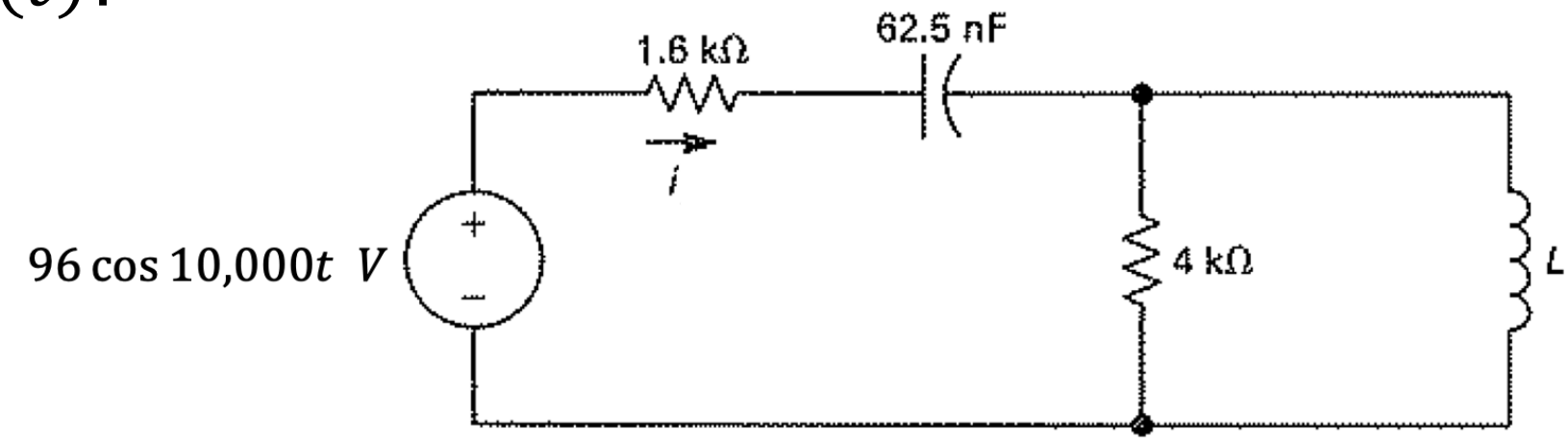

$0.8\ H, 20\cos(10{,}000t)\ mA;\ 0.2\ H, 405\cos(10{,}000t)\ mA$

Practice problem: find the capacitor value to maximize the magnitude of the voltage appearing across the capacitor. What is that magnitude?

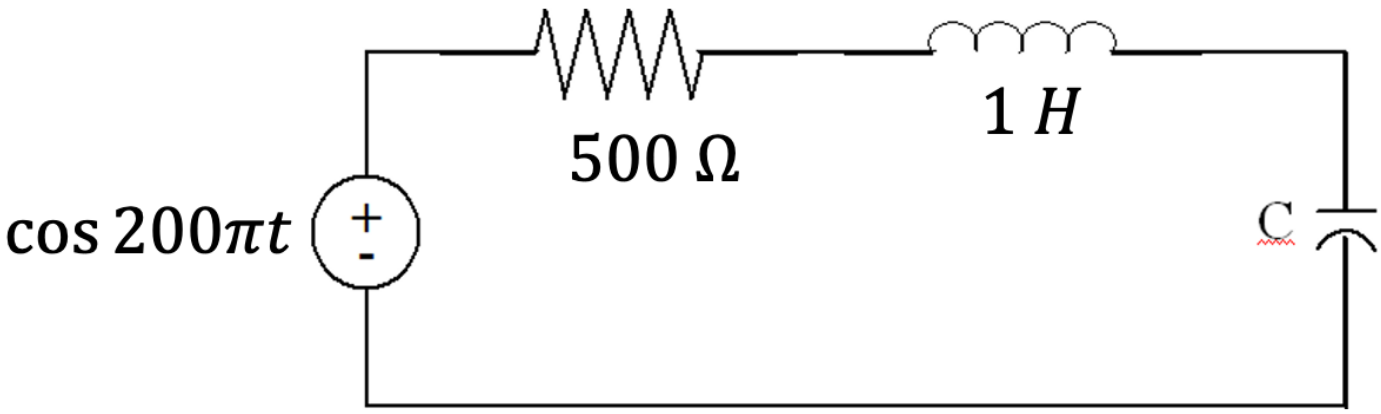

$1.55\ \mu F, 1.61\ V$