Lecture 24
Theorems – 1 of 6

linearity & superposition;
transformations

Linearity & Superposition

- <u>Linearity</u>: we have already seen that for a single "input" (voltage or current), the "output" (voltage or current) is proportional to that input

$$v_o = k\, v_s$$

- e.g.

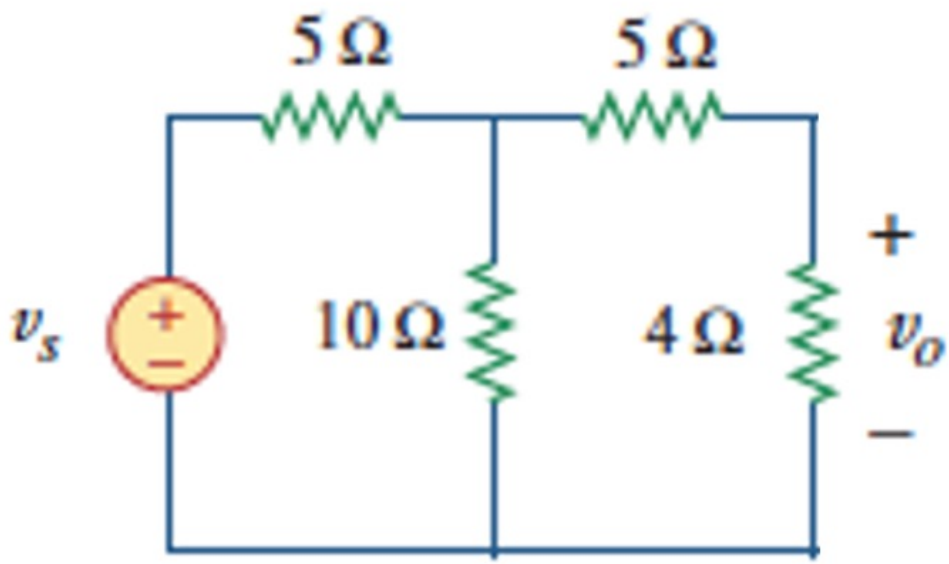

- What about multiple “input” sources?

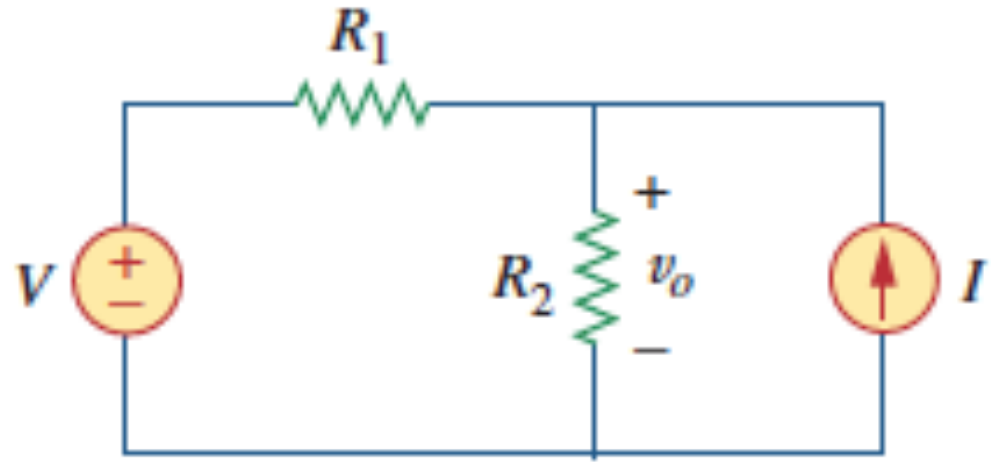

- Analyzing

$$\frac{v_o - V}{R_1} + \frac{v_o}{R_2} - I = 0$$

or

$$v_o = \frac{R_1 R_2}{R_1 + R_2} I + \frac{R_2}{R_1 + R_2} V$$

- Linearity extends to multiple “input” sources

$$v_o = k_1 v_{s1} + k_2\, v_{s2} + k_3\, i_{s3} + \cdots$$

“Superposition”

- We can exploit this idea to decompose problems

$$v_o(I, V) = \frac{R_1 R_2}{R_1 + R_2} I + \frac{R_2}{R_1 + R_2} V$$

$$= v_o(I, 0) + v_o(0, V)$$

- Example:

$$v_o(I,V) = v_o(I,0) + v_o(0,V)$$

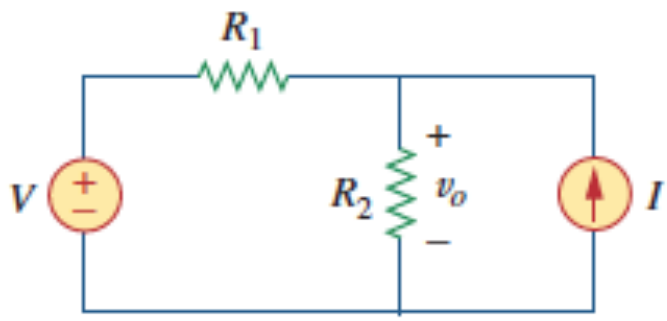

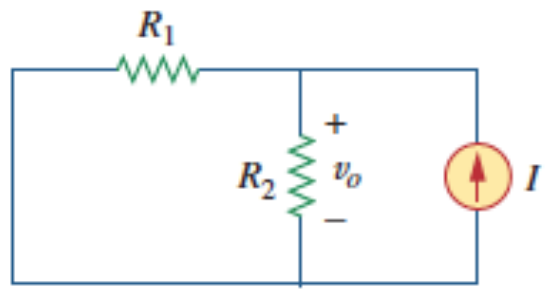

$$v_o(I,0) = \frac{R_1 R_2}{R_1 + R_2} I$$

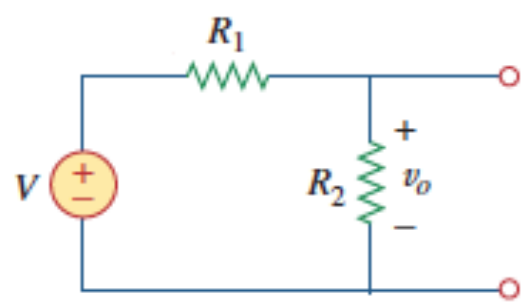

$$v_o(0,V) = \frac{R_2}{R_1 + R_2} V$$

Example: find i

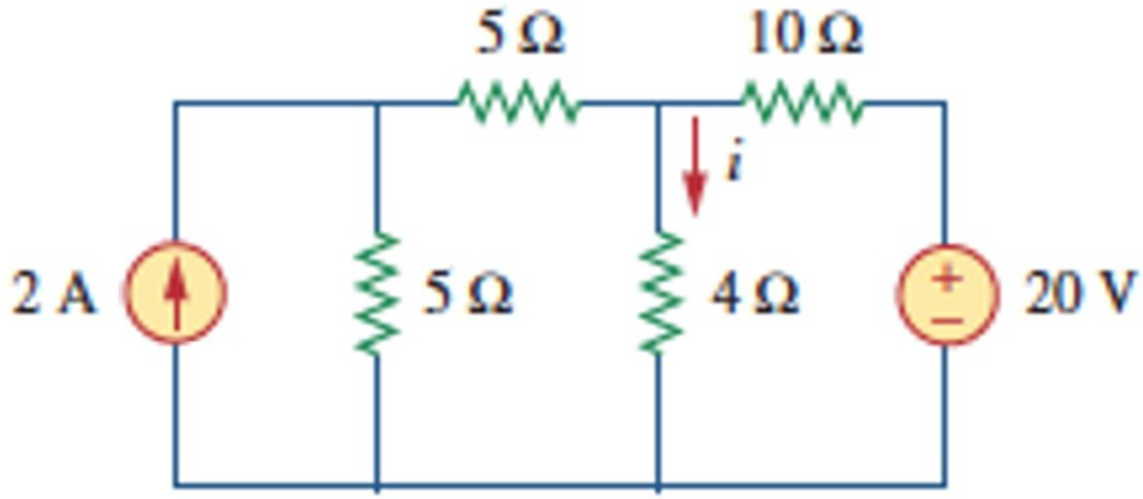

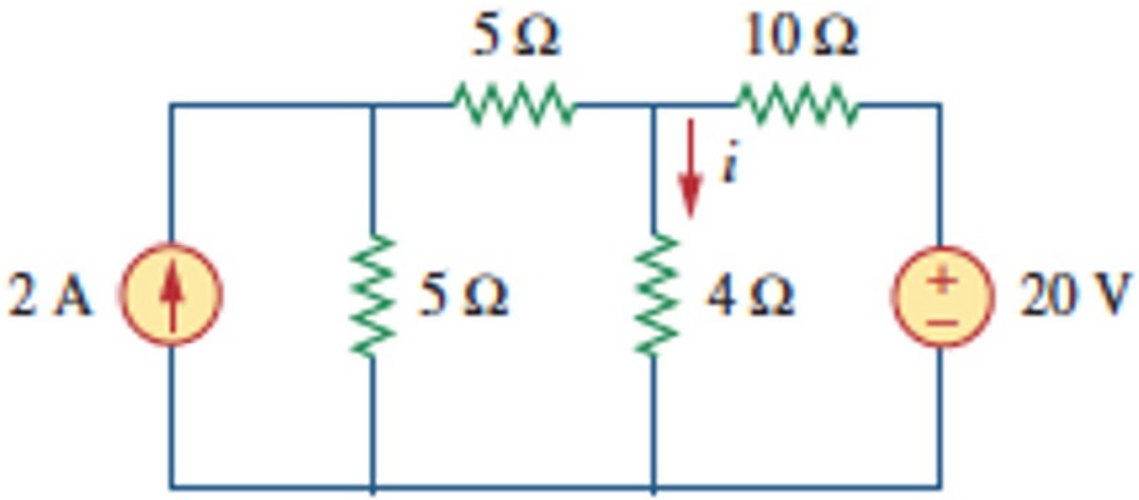

$i = 1.67\ A$

Phasor example: note different frequencies

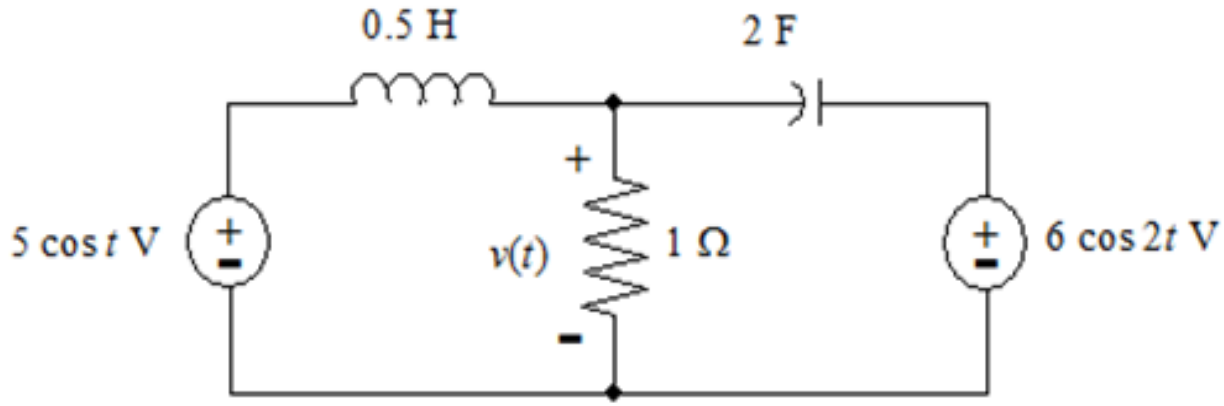

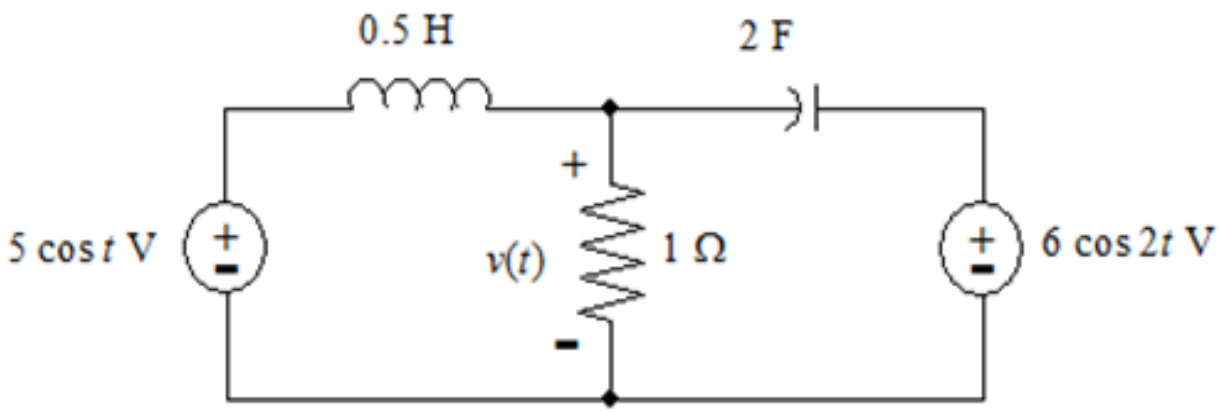

$$v(t) = 10\cos(t - 90°) + 17.59\cos(2t + 18.4°)\ V$$

Source Transformations

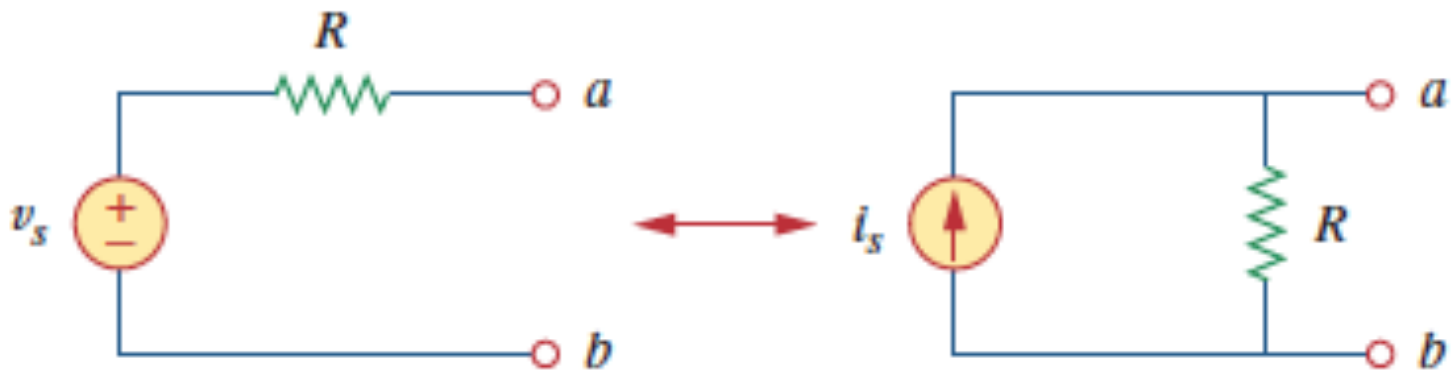

– These two sub-circuits are equivalent *at the terminals* a, b

iff $v_s = R\, I_s$

– Utility: simplify circuit for quick analysis

- Example:

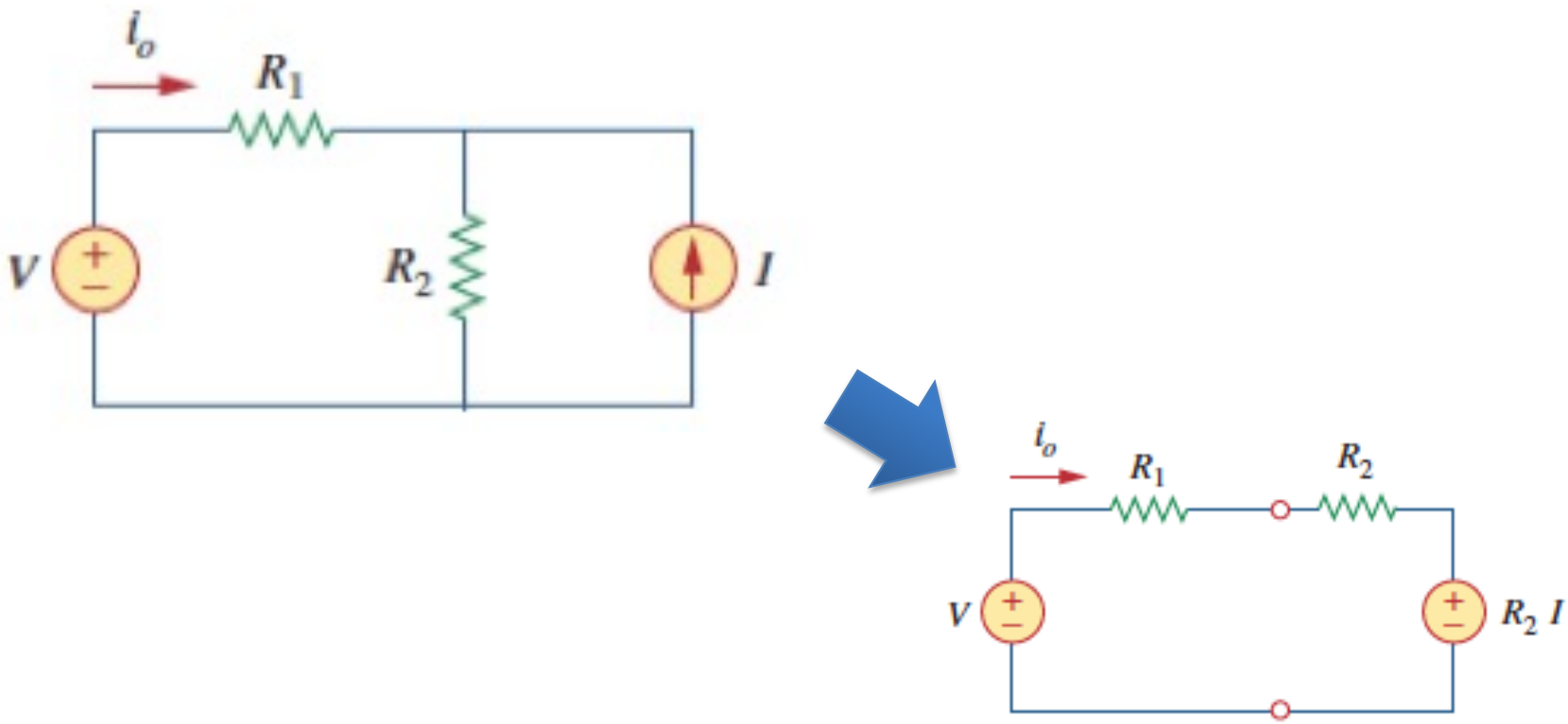

$$i_0 = \frac{V - R_2 I}{R_1 + R_2}$$

Example: find i

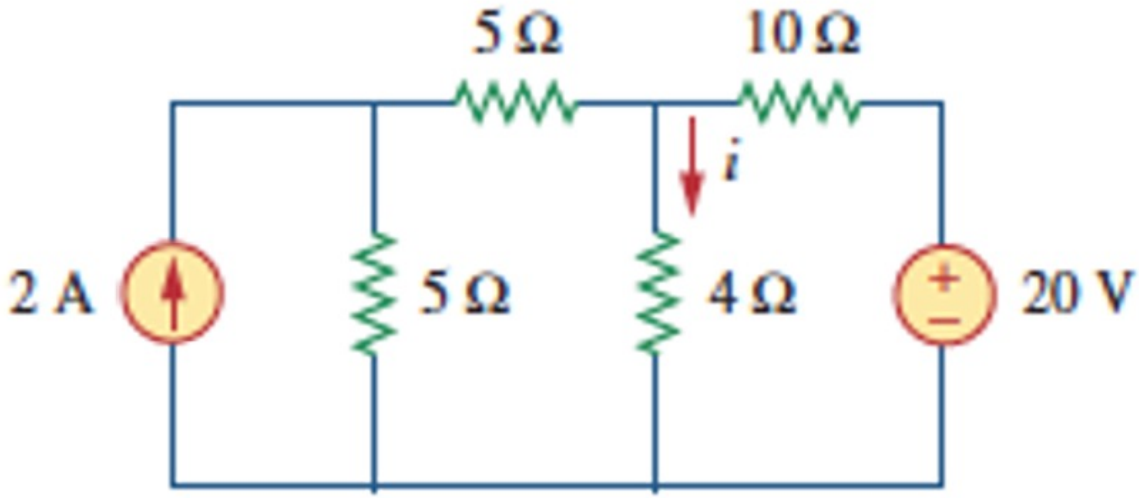

$1.67\ A$

Example: find $i_x(t)$

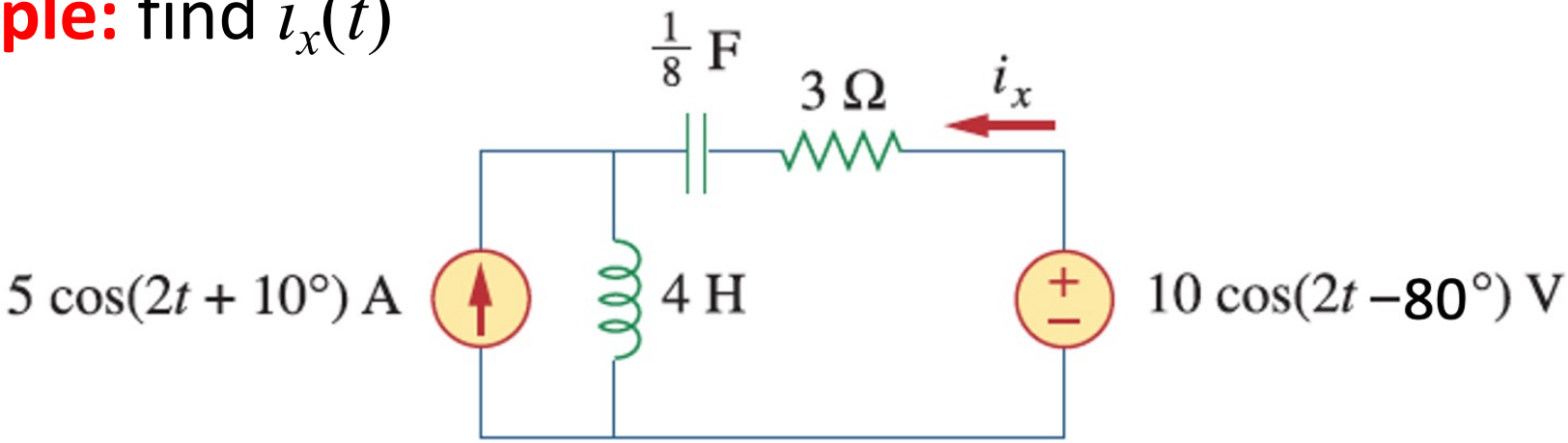

$$i_x(t) = 10\cos(2t + 174°)\ V$$

- Application: recall repetitive use of series/parallel R:

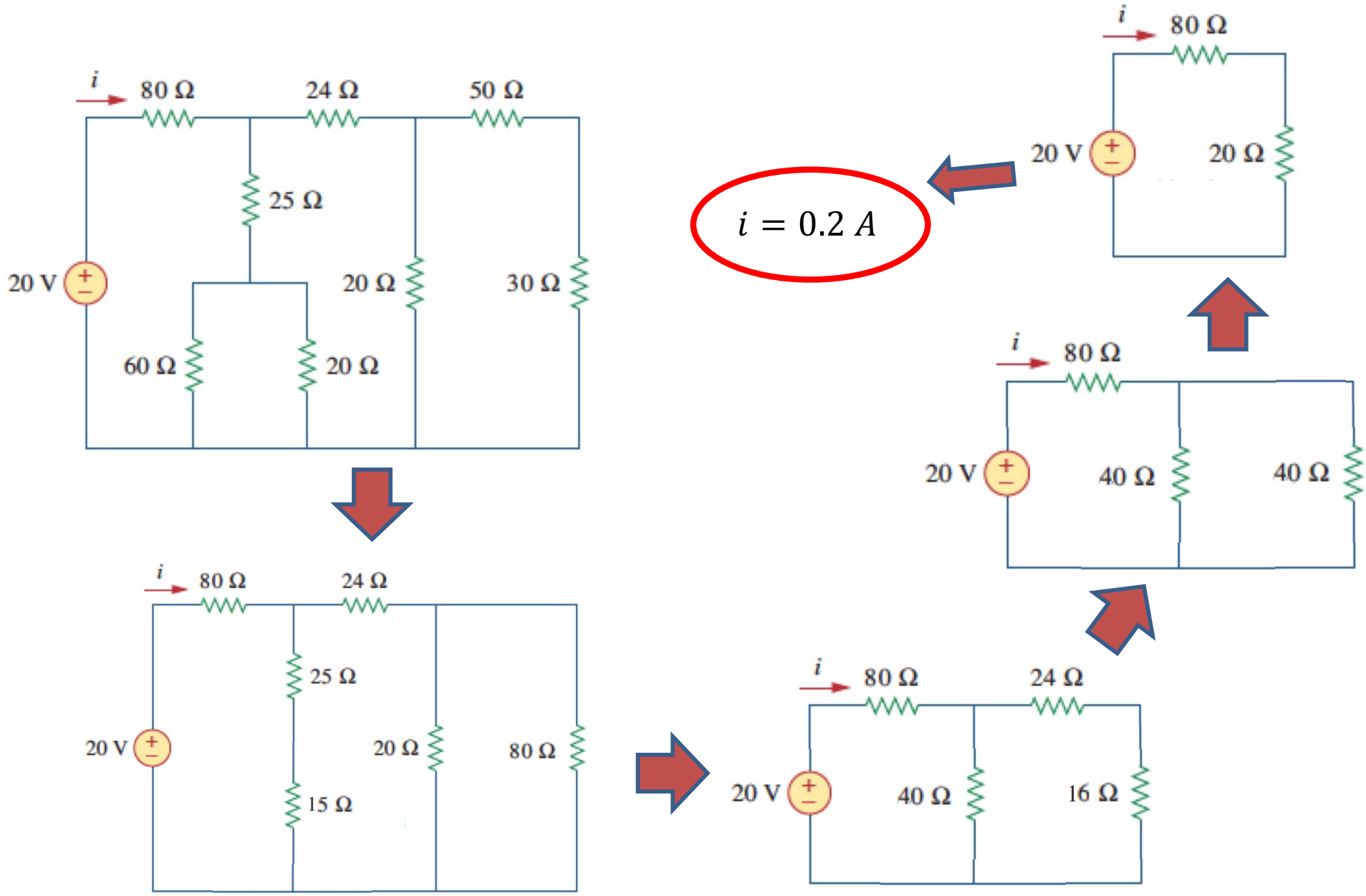

- Can do something similar if a source is present

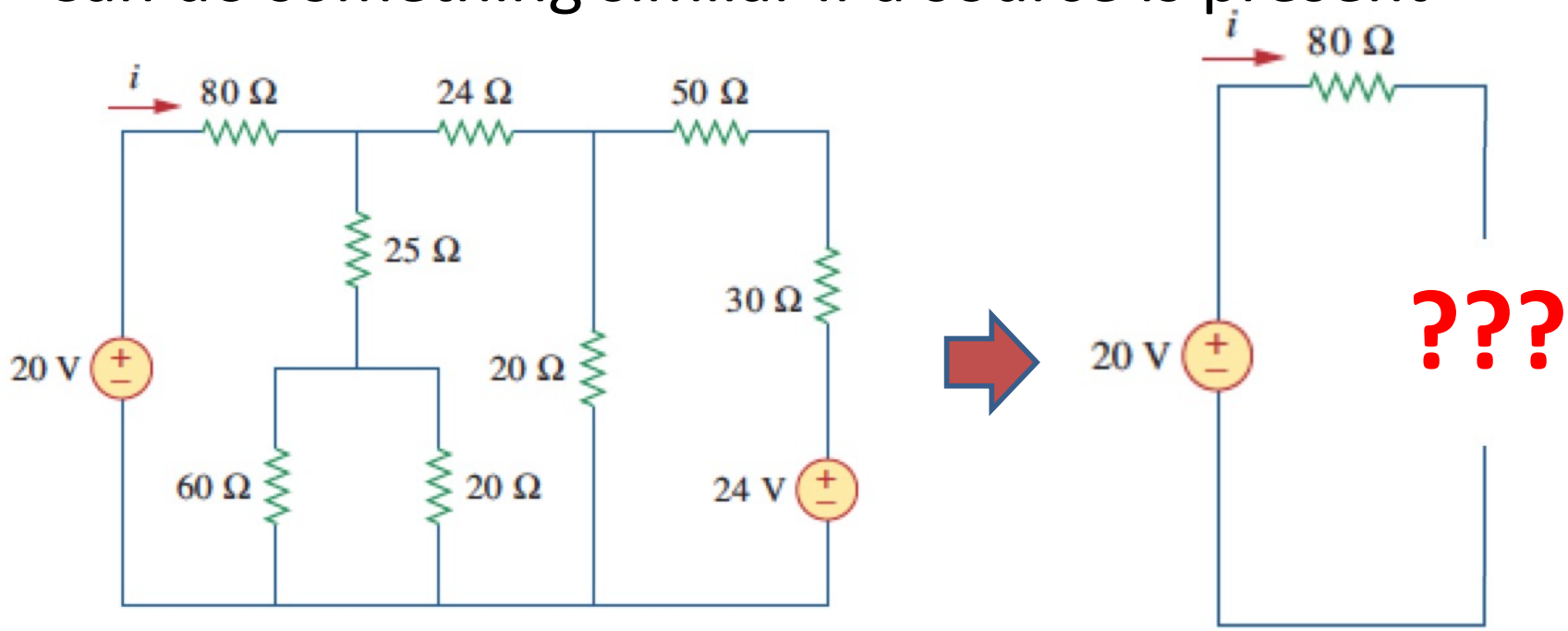

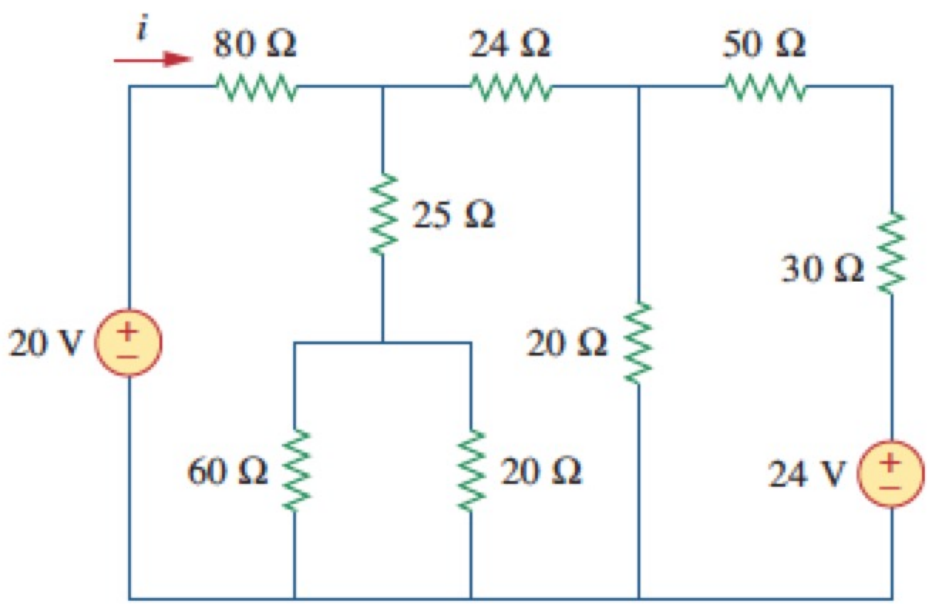
i
80 Ω
24 Ω
50 Ω
25 Ω
30 Ω
20 V
20 Ω
60 Ω
20 Ω
24 V

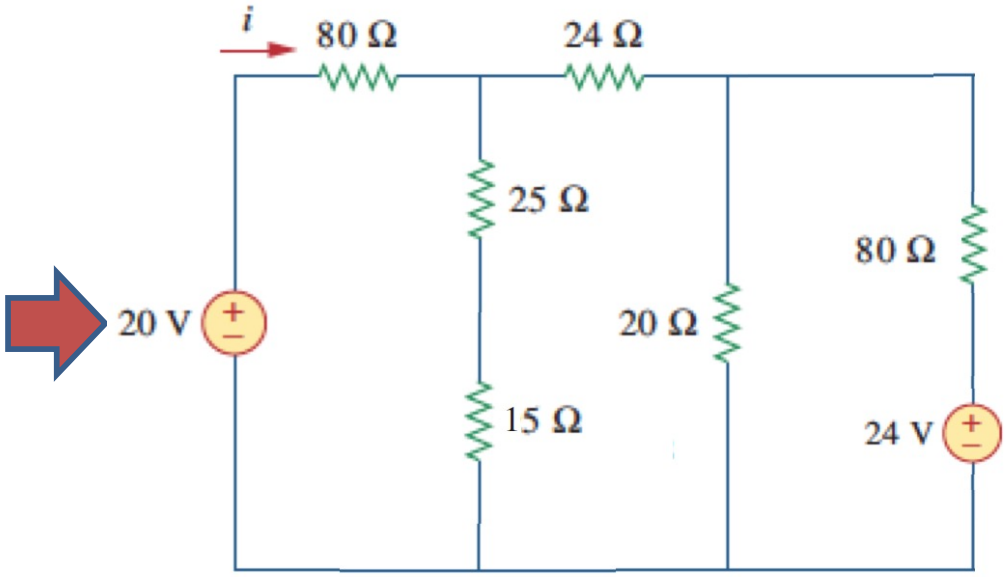
i
80 Ω
24 Ω
25 Ω
80 Ω
20 V
20 Ω
15 Ω
24 V

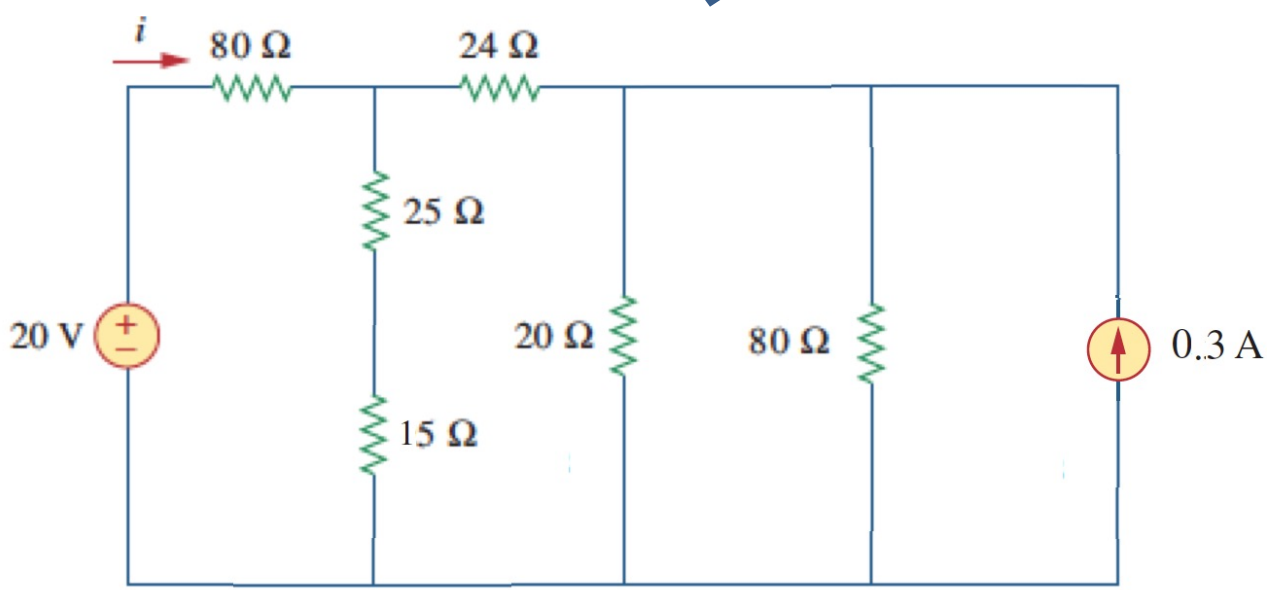
i
80 Ω
24 Ω
25 Ω
20 V
20 Ω
80 Ω
0.3 A
15 Ω

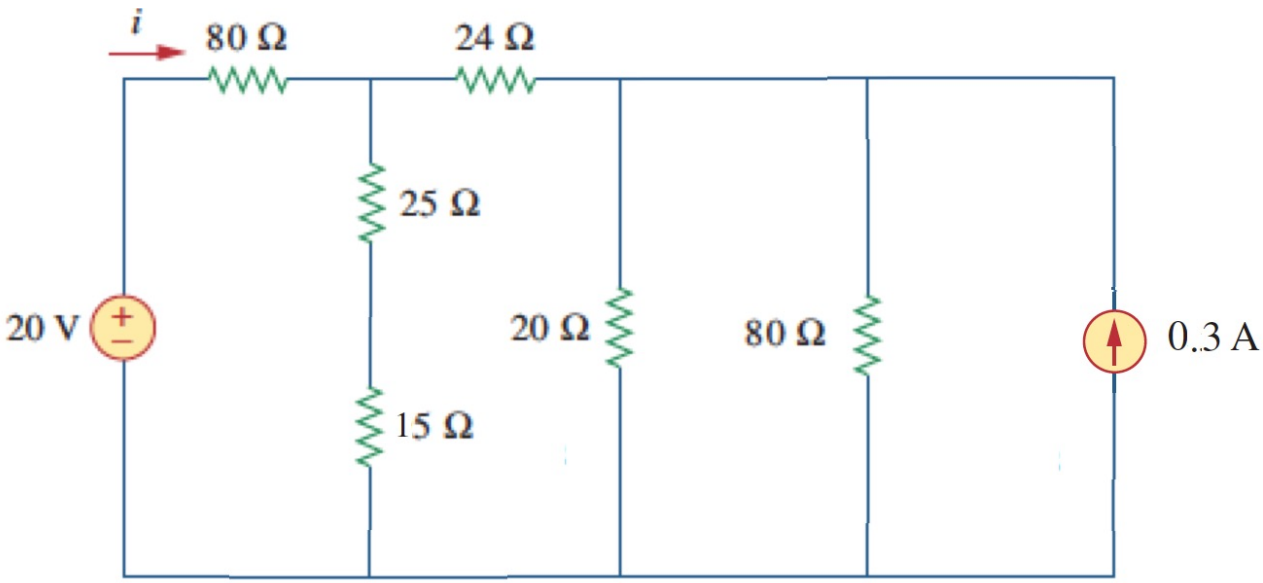
i
80 Ω
24 Ω
25 Ω
20 V
20 Ω
80 Ω
0.3 A
15 Ω

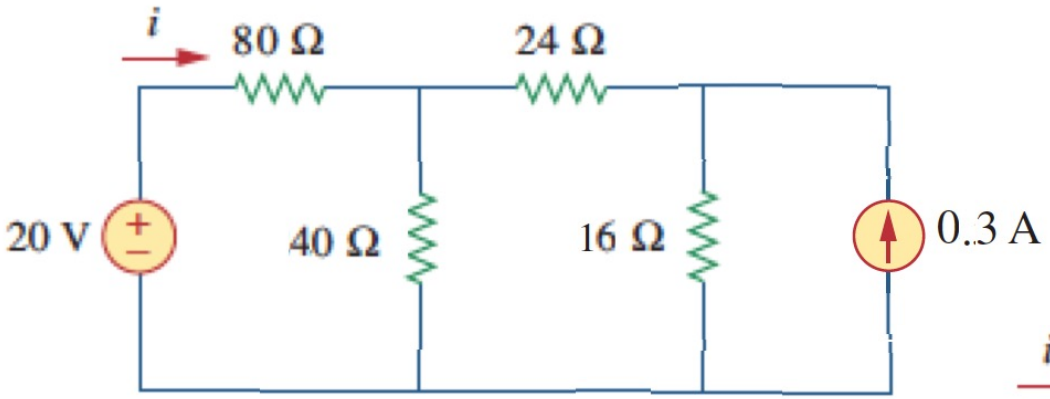
i
80 Ω
24 Ω
20 V
40 Ω
16 Ω
0.3 A

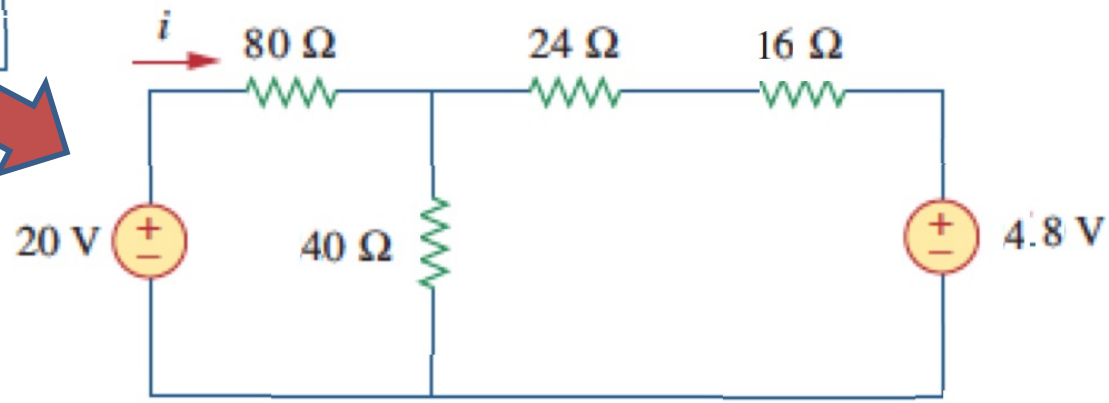
i
80 Ω
24 Ω
16 Ω
20 V
40 Ω
4.8 V

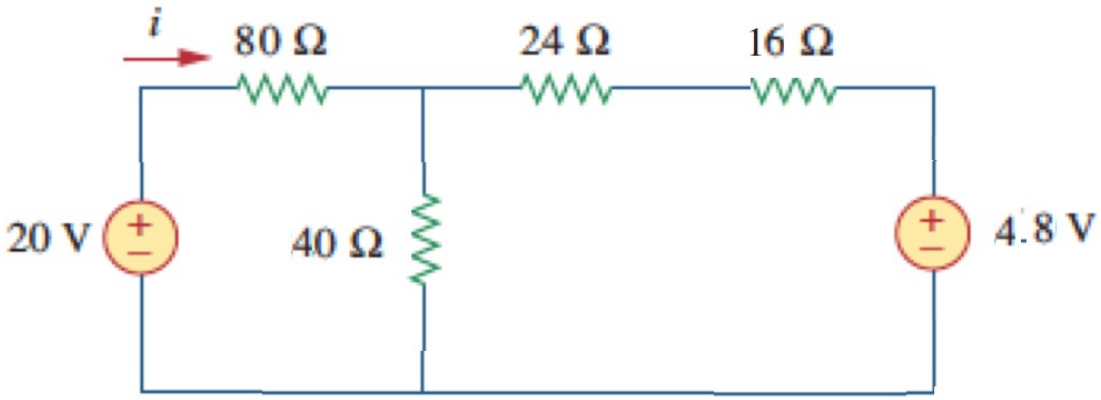
i
80 Ω
24 Ω
16 Ω
20 V
40 Ω
4.8 V

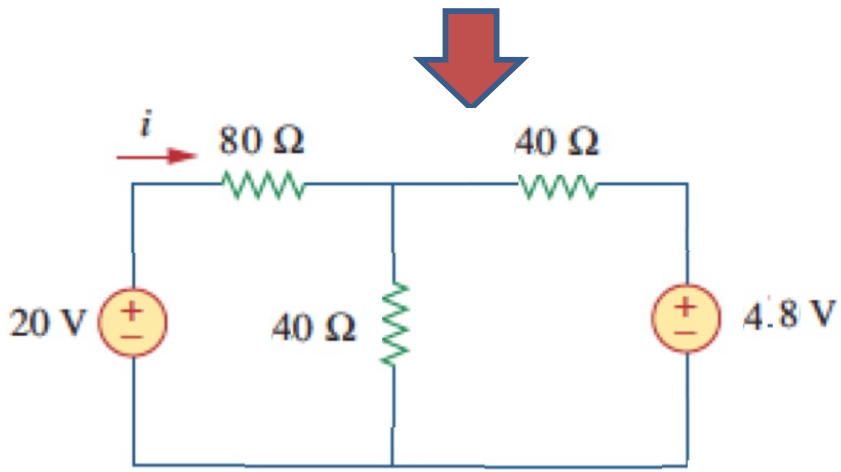
i
80 Ω
40 Ω
20 V
40 Ω
4.8 V

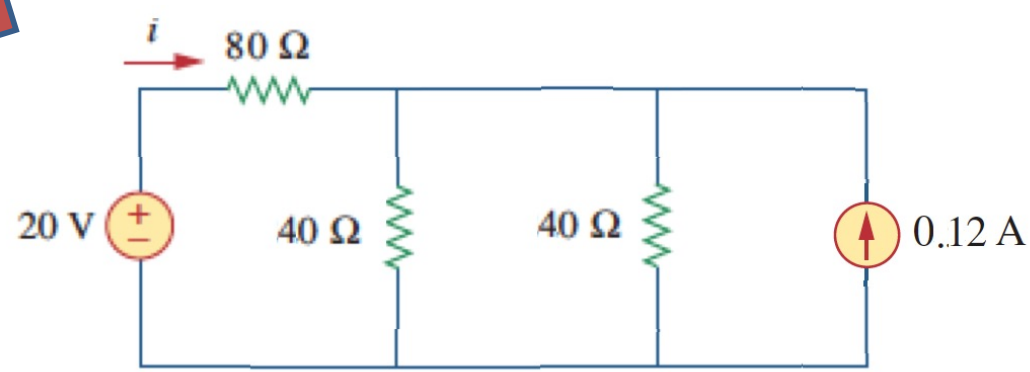
i
80 Ω
20 V
40 Ω
40 Ω
0.12 A

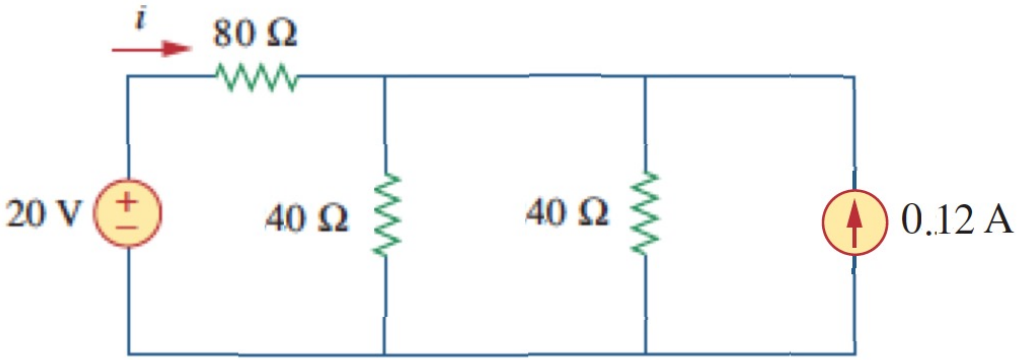

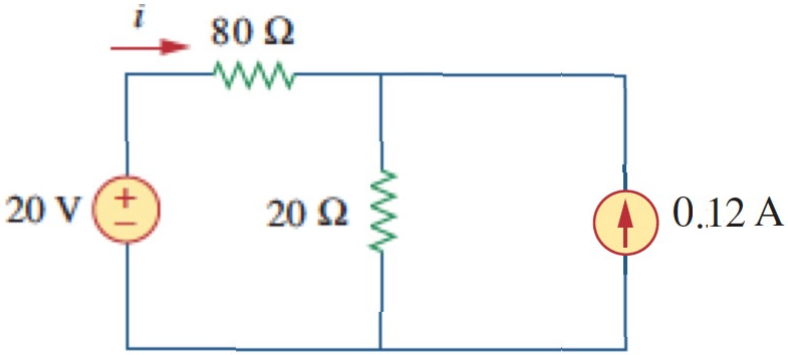

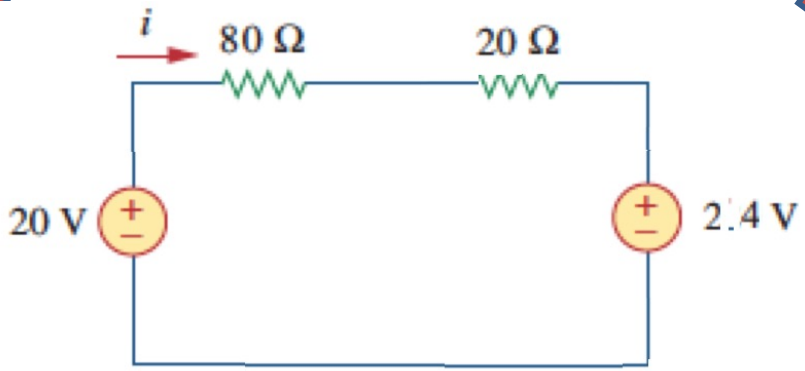

$i = 0.176\ A$

Example: find i

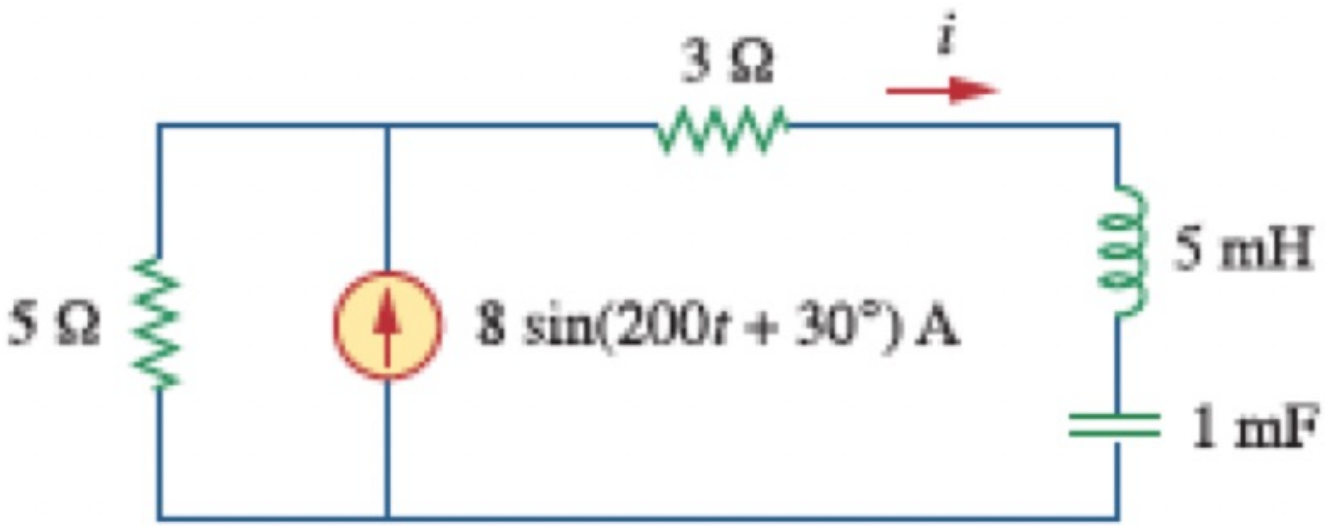

$$i(t) = 8.94\cos(200t + 56.6°)\ A$$

Example: find i_Δ

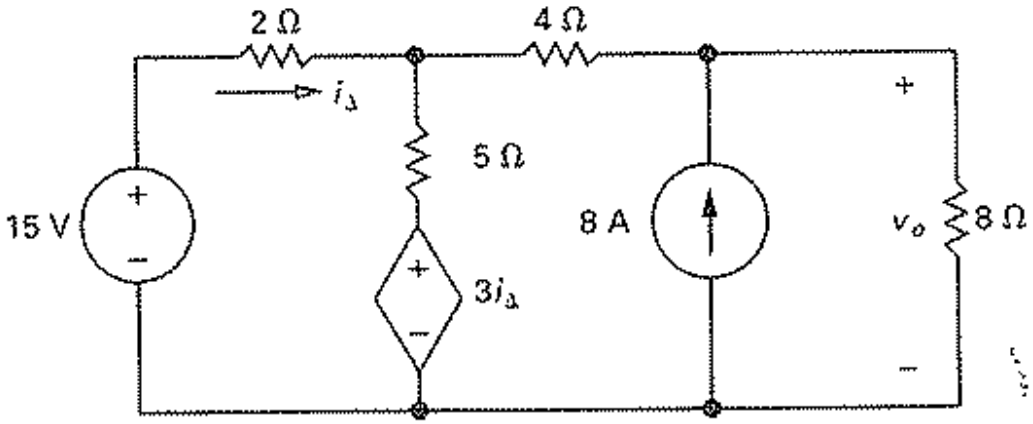

$$i_{\Delta} = \frac{223}{130}\ A$$

Practice problem: find v_o and i_o

$v_o = 8\ V, \qquad i_o = \frac{2}{3}\ A$

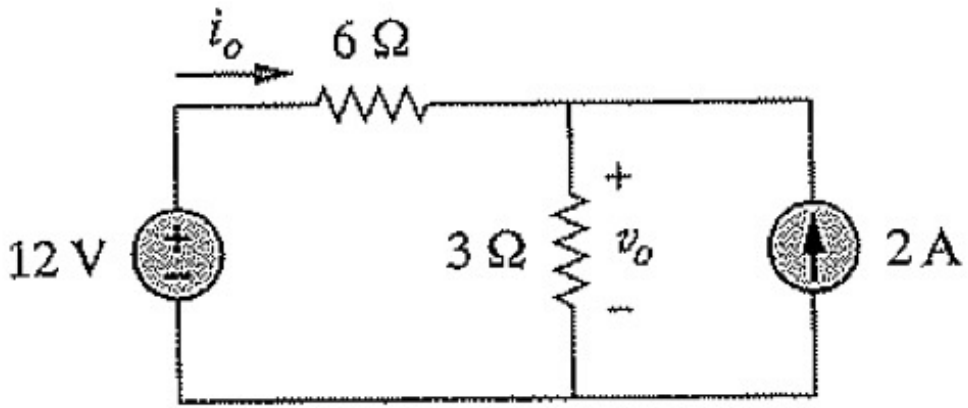

Practice problem: find i_o

$$i_o = \frac{14}{3} A$$

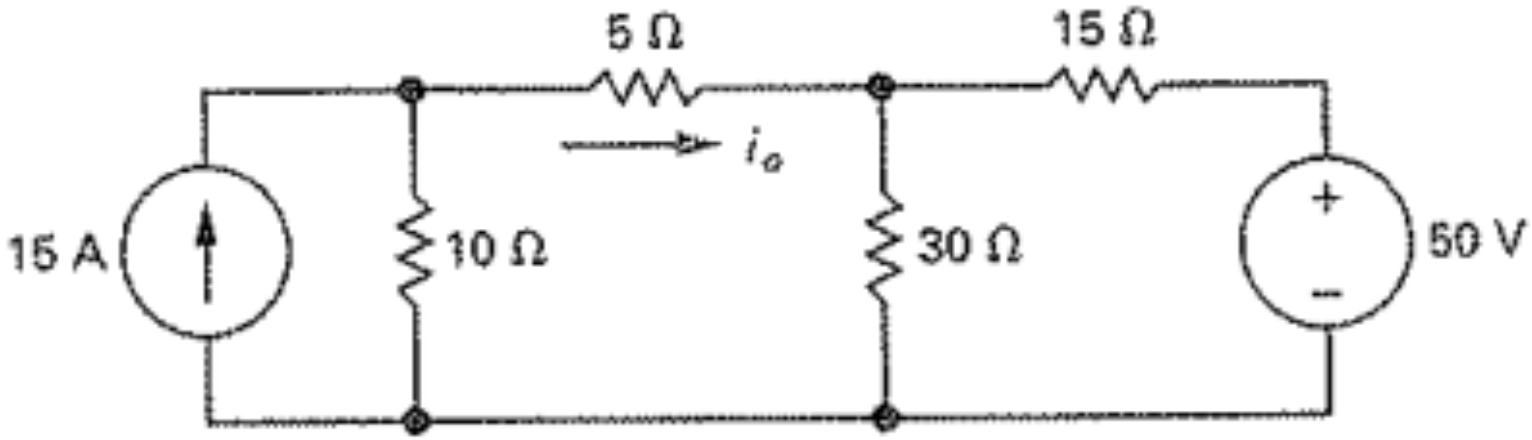

$i_o = 1.79\ A$

Practice problem: find i_o

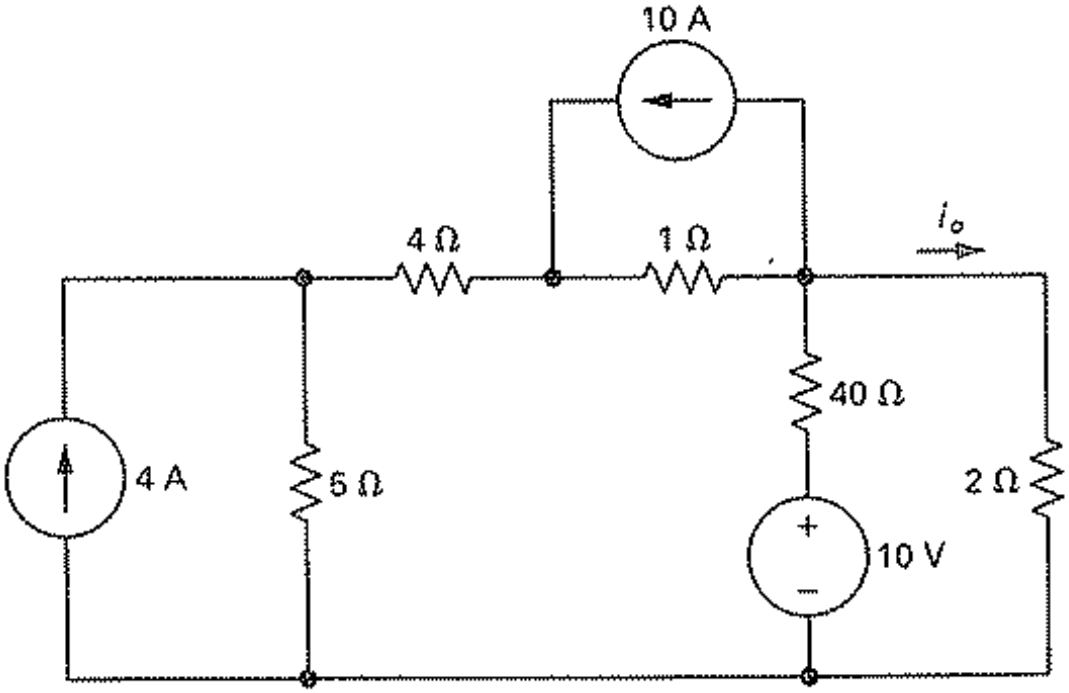

Practice problem: find v_o

$v_o = -11\ V$

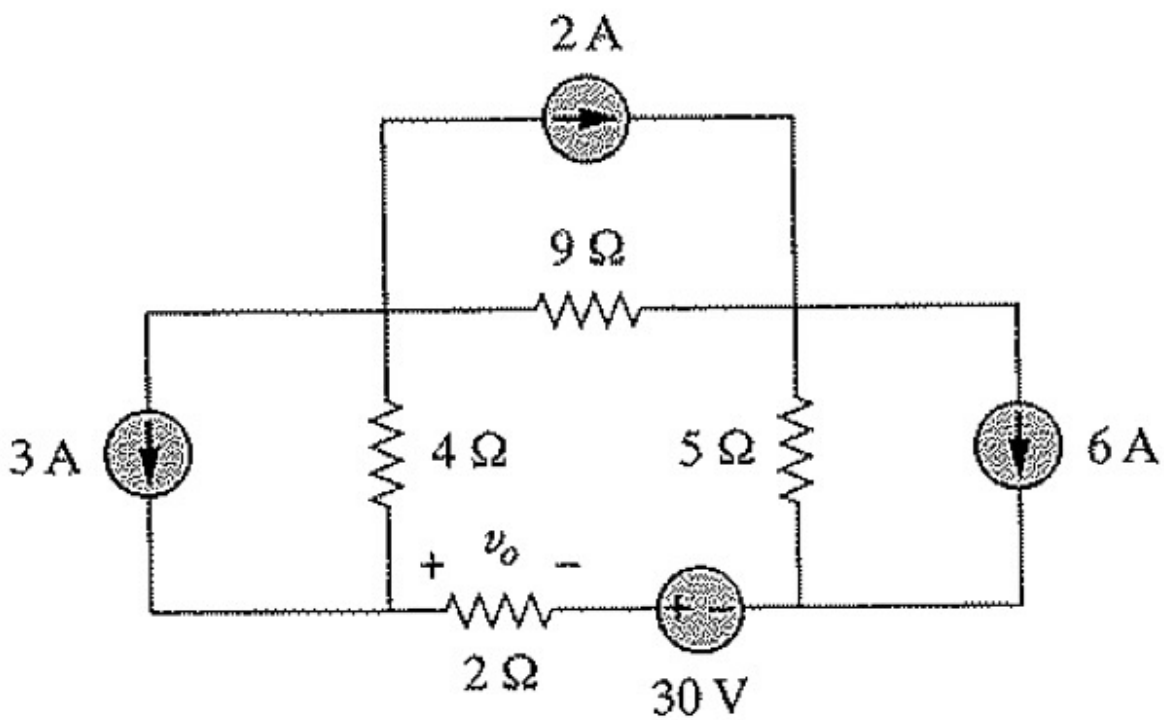

Practice problem: find v_x if

$= v_s\ (t) = 50\cos(2t + 90°)$ V

and $i_s(t) = 12\,cos(2t + 10°)$ A
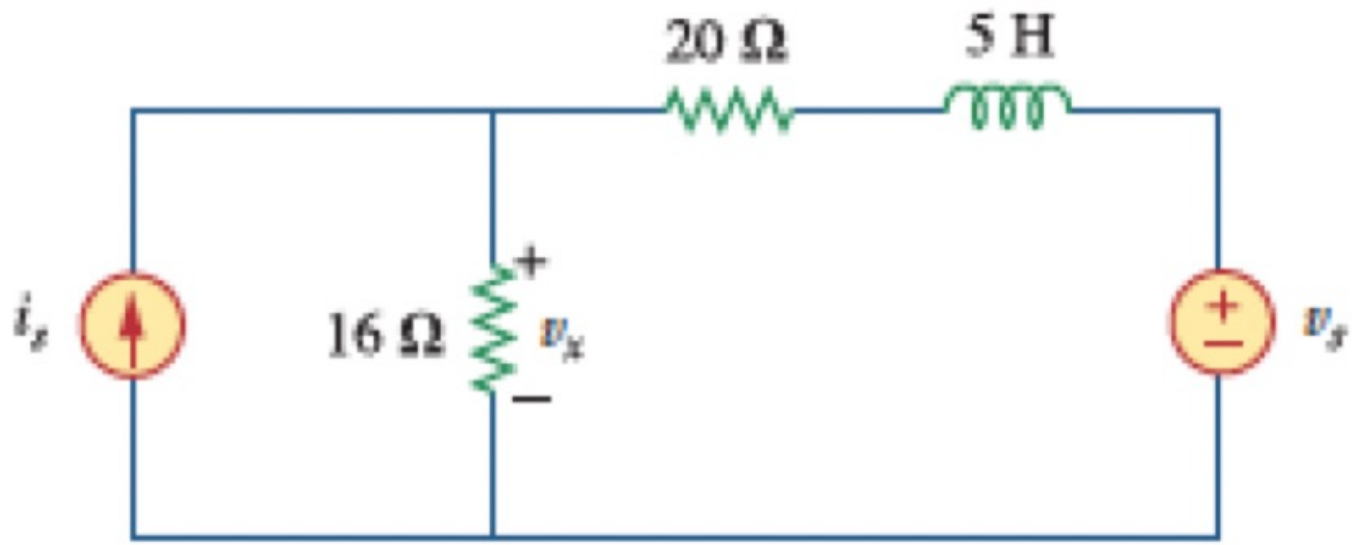
$v_x(t) = 129\cos(2t + 28.76°)\,V$