Lecture 25
Theorems – 2 of 6

Thévenin

Thévenin Models

- Application – recall combining transformations and series/parallel methods from the last class:

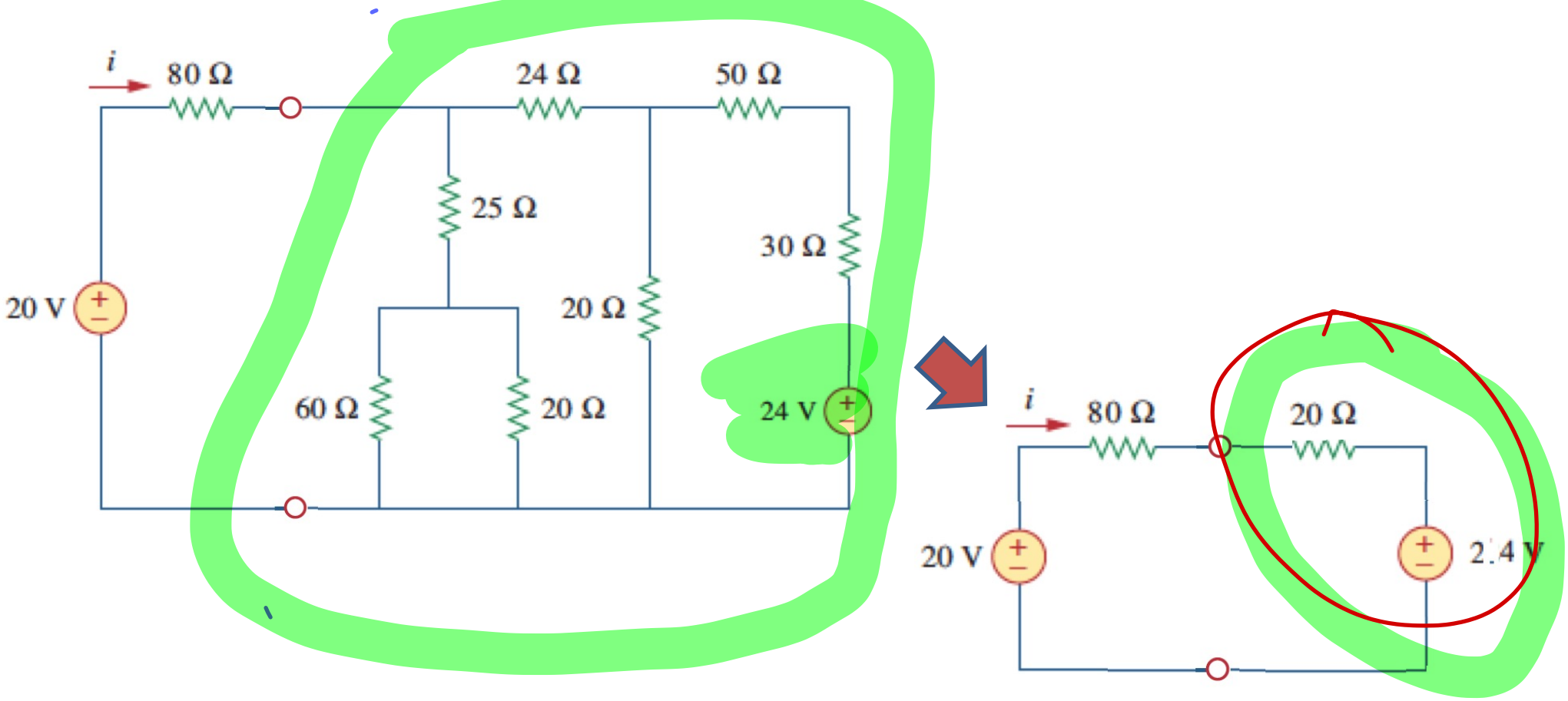

Thévenin equivalent circuit ≡ electrical equivalence at any pair of terminals

- 2 parameters:
  - V_{Th}
  - R_{Th}

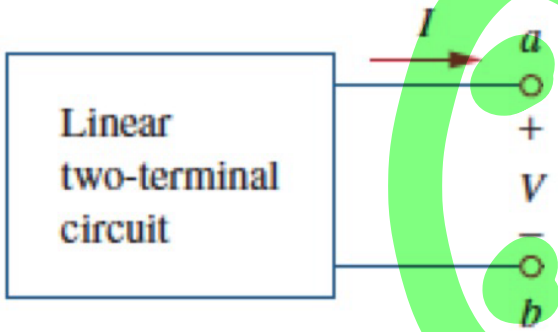

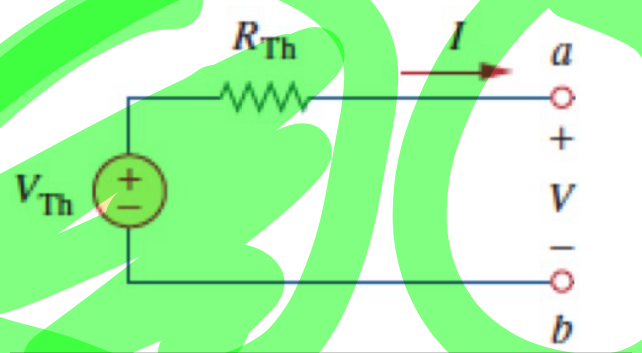

- Example:

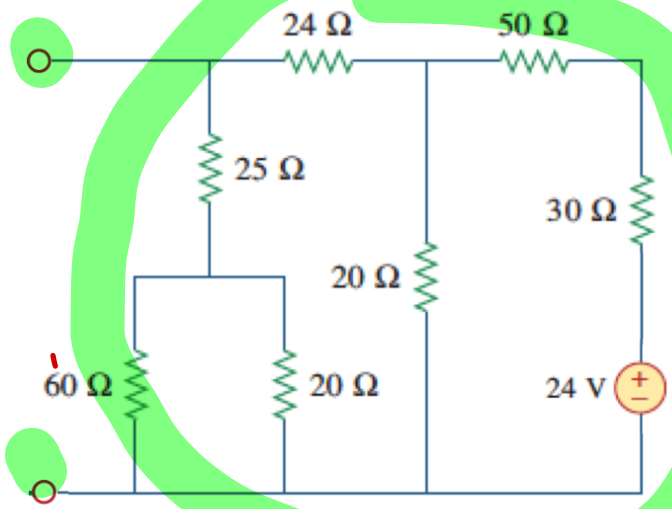

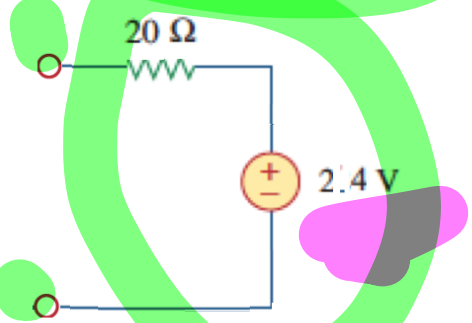

How to find V_{Th} and R_{Th} ?

- Concept: both the circuit <u>and</u> the model should behave the same way **no matter what** is connected at a-b

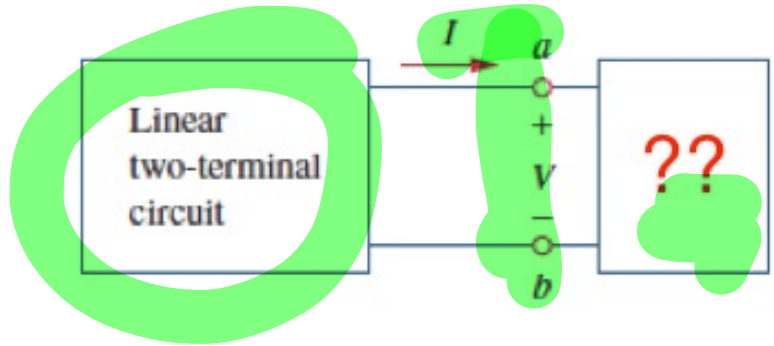

  - With only 2 variables in the model, we need only check **2** load situations

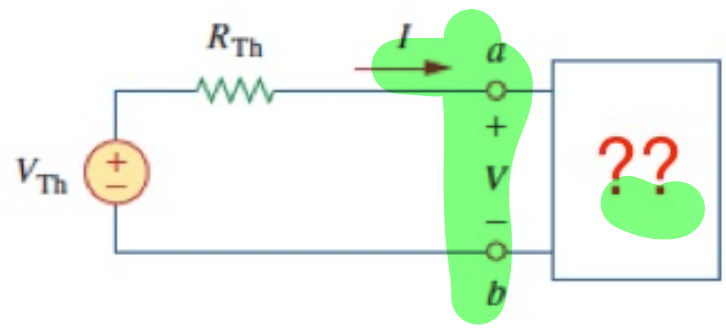

  - Need only match one of the V or I variables in each

Thévenin: the most common approach

- Connect nothing – "open circuit" test
  - Just need a voltmeter

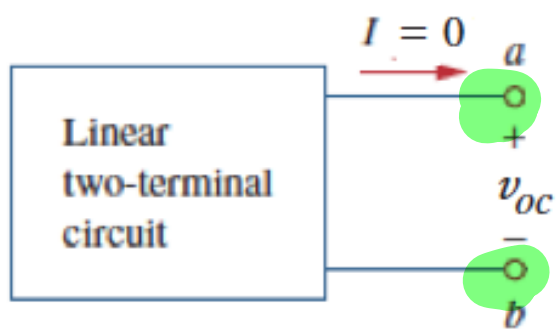

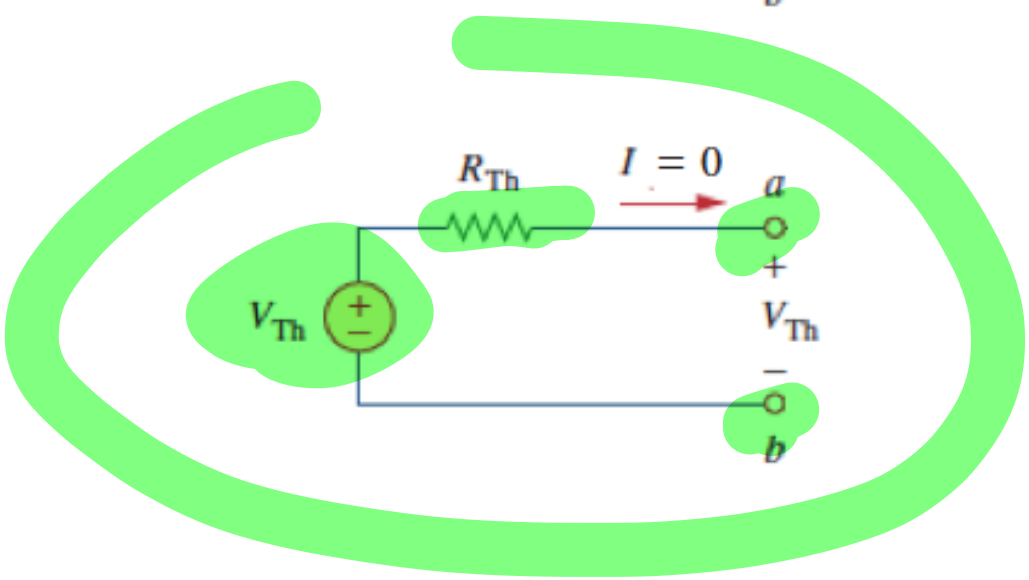

Clearly

$$V_{Th} = V_{OC}$$

Another popular approach

- Connect a wire – "short circuit" test
  - Popular for paper analysis

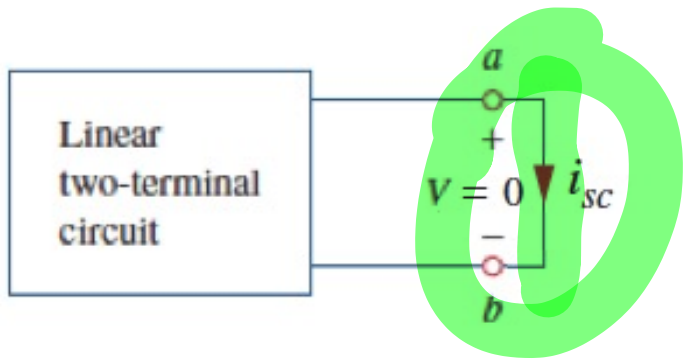

$$i_{SC} = \frac{V_{Th}}{R_{Th}}$$

So

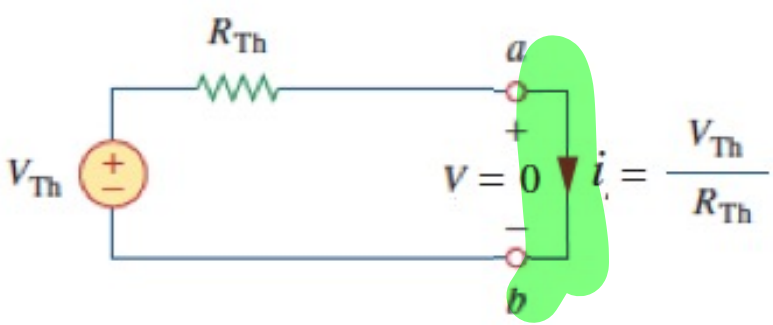

$$R_{Th} = \frac{V_{Th}}{i_{SC}} = \frac{V_{OC}}{i_{SC}}$$

Example:

V_{oc} :

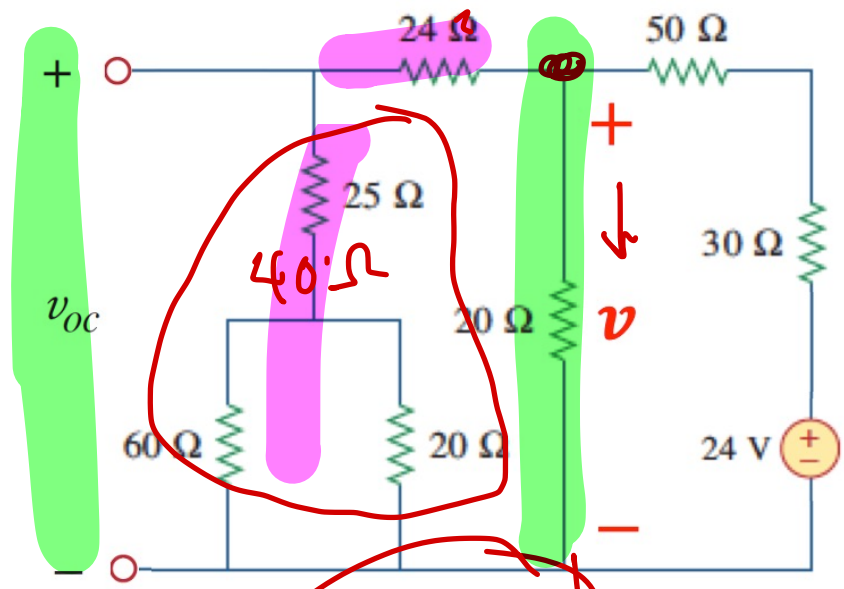

- Use node analysis:

$$\frac{v}{20} + \frac{v-24}{80} + \frac{v}{64} = 0 \quad \Rightarrow \quad v = \frac{96}{25}$$

- Then voltage division:

$$v_{OC} = \frac{40}{64} v \quad \Rightarrow \quad V_{Th} = v_{OC} = 2.4 \text{ volts}$$

Note how the short changes the circuit

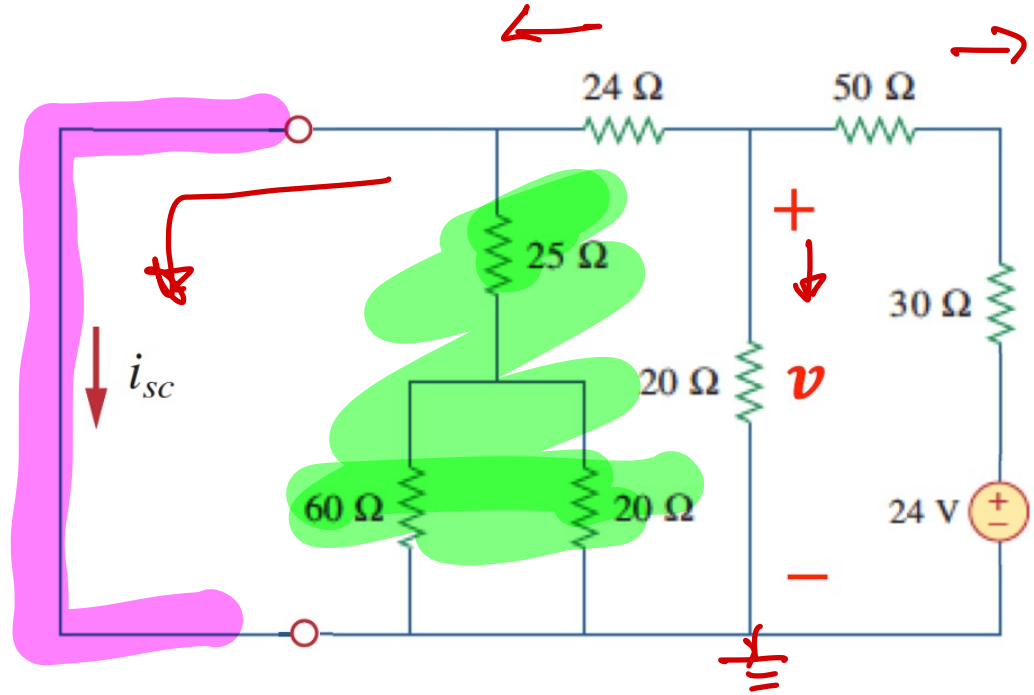

- Use node analysis:

$$\frac{v}{20} + \frac{v-24}{80} + \frac{v}{24} = 0 \quad \Rightarrow \quad v = \frac{72}{25}$$

- Then Ohm's Law:

$$i_{SC} = \frac{v}{24} = 0.12 \quad \Rightarrow \quad R_{Th} = \frac{v_{OC}}{i_{SC}} = \frac{2.4}{0.12} = 20\ \Omega$$

So $V_{Th} = 2.4$ volts and $R_{Th} = 20\ \Omega$

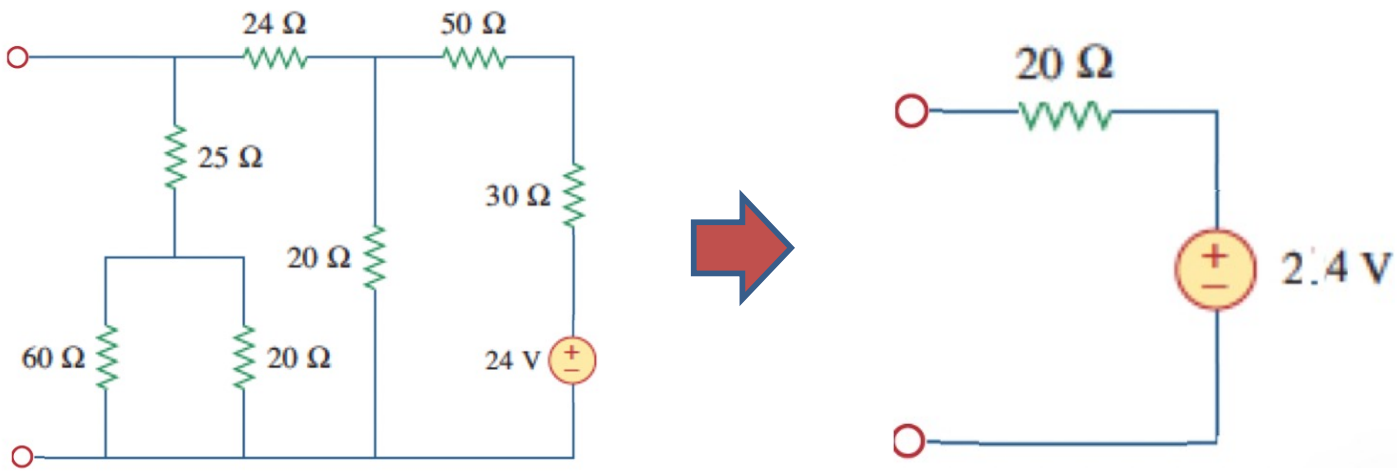

and

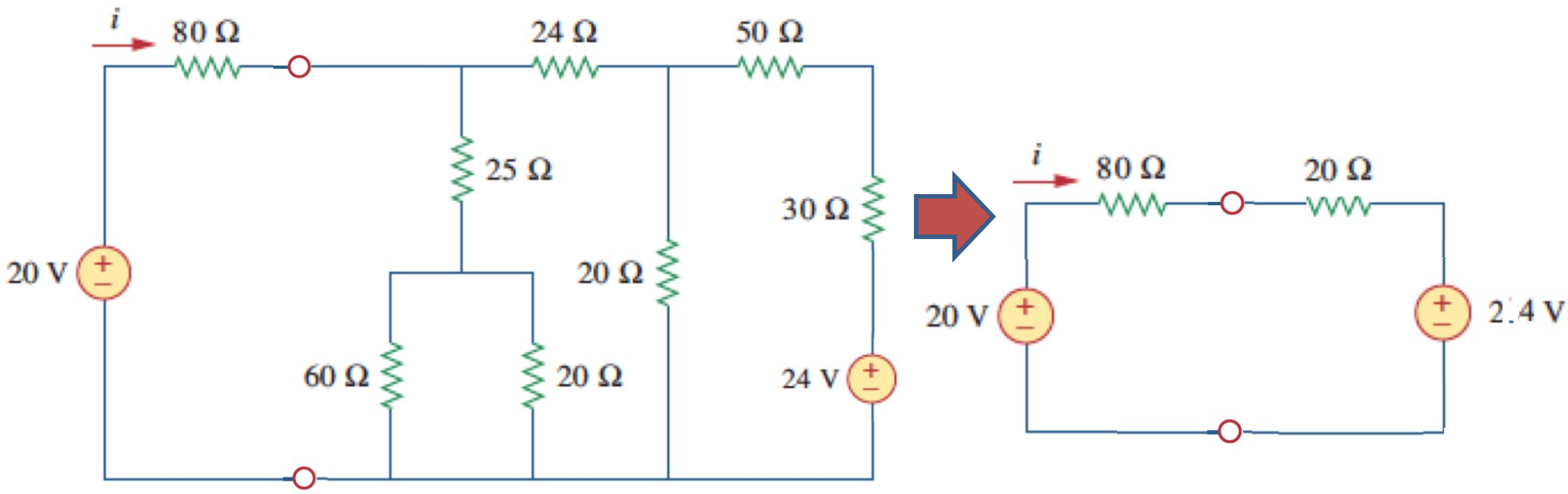

Example: find V_{th} and R_{Th}

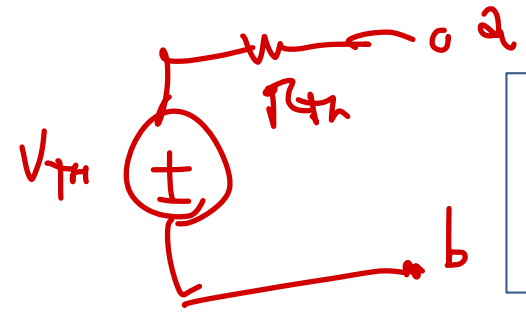

$$V_{Th} = v_{OC}$$
$$R_{Th} = \frac{v_{OC}}{i_{SC}}$$

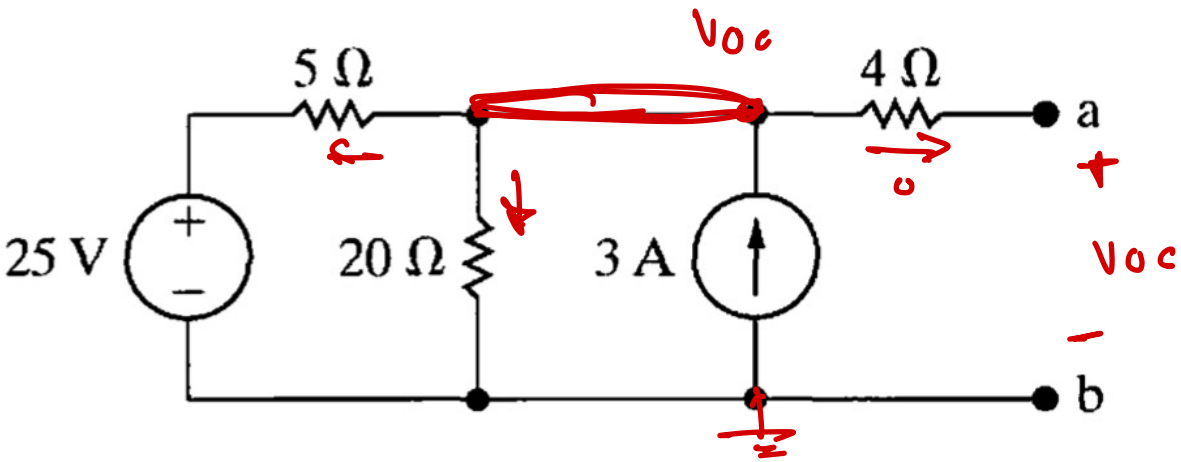

$$V_{Th} = 32\,V$$

$$\left(\frac{V_{oc}}{20} + \frac{V_{oc} - 25}{5} - 3 = 0\right) 20$$

$$V_{oc} + 4V_{oc} - 100 - 60 = 0$$

$$5V_{oc} = 160$$

$$V_{oc} = 32\,V$$

sc test

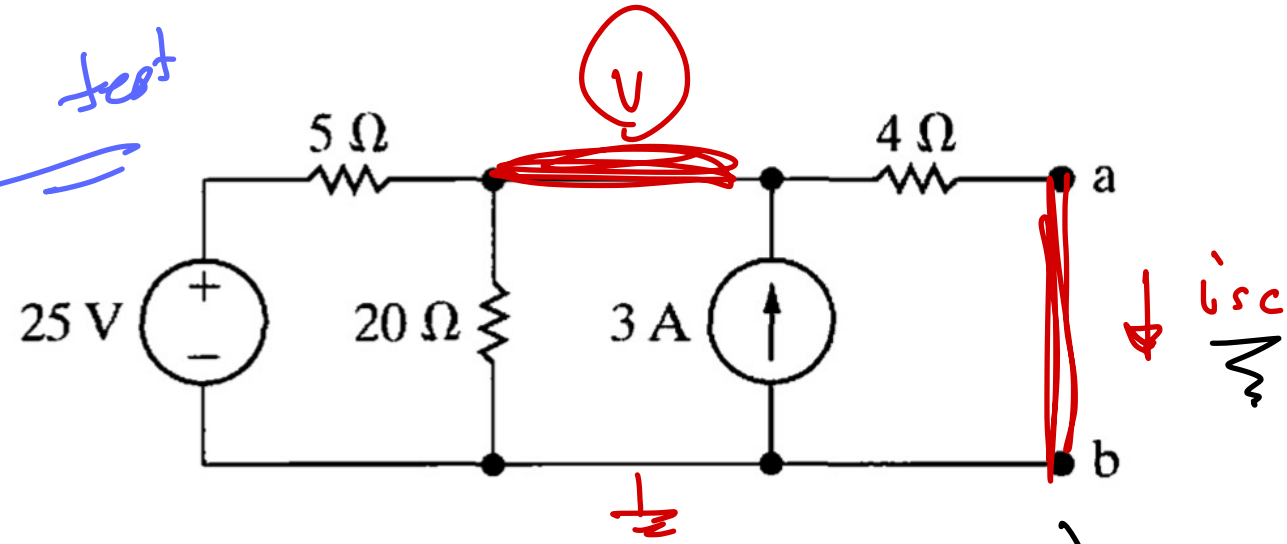

32 V, 8 Ω

$$\left(\frac{v}{20} + \frac{v-25}{5} - 3 + \frac{v}{4} = 0\right) 20$$

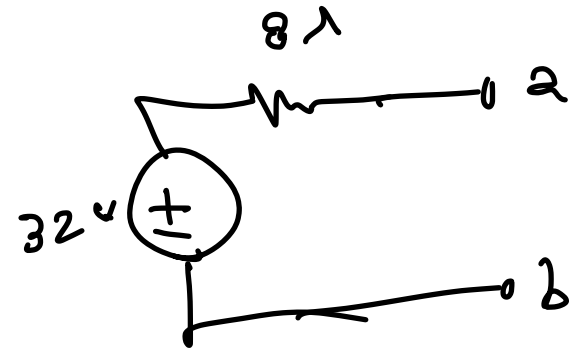

$$v + 4v - 100 - 60 + 5v = 0$$

$$10v = 160$$

$$v = 16\ V$$

$$R_{th} = \frac{v_{oc}}{i_{sc}} = \frac{32\ V}{4\ A} = 8\ \Omega$$

$$i_{sc} = \frac{v}{4} = \frac{16}{4} = 4\ A$$

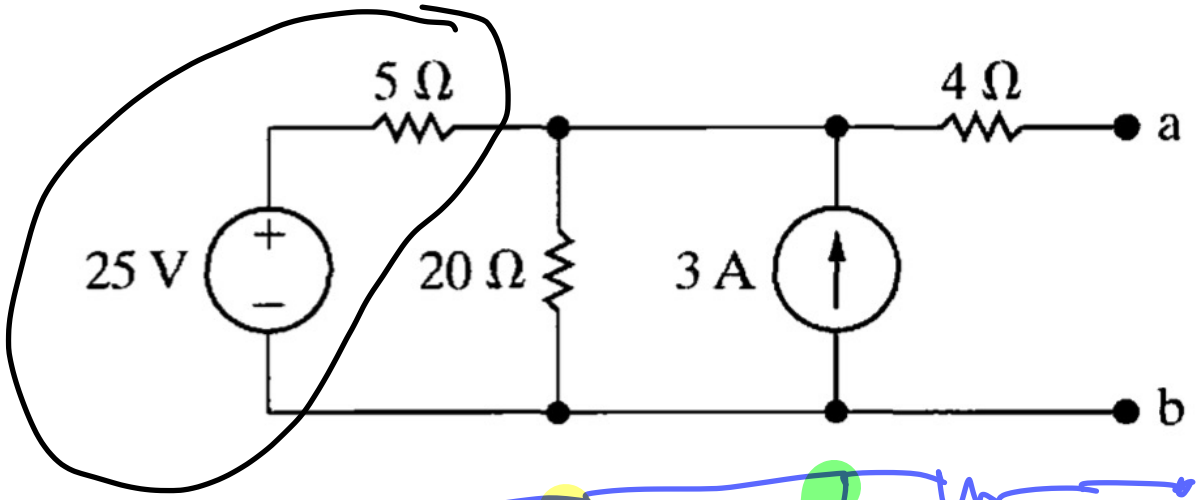

$32\ V, 8\ \Omega$

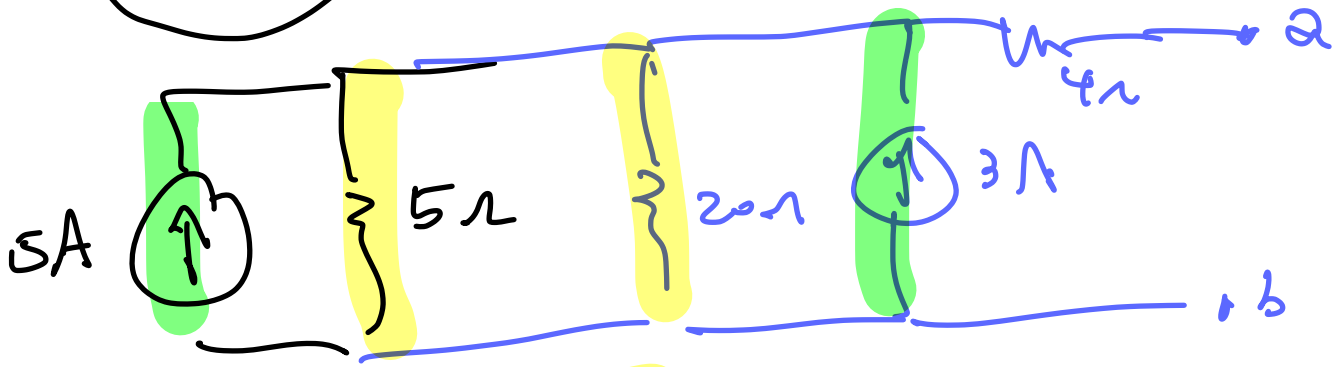

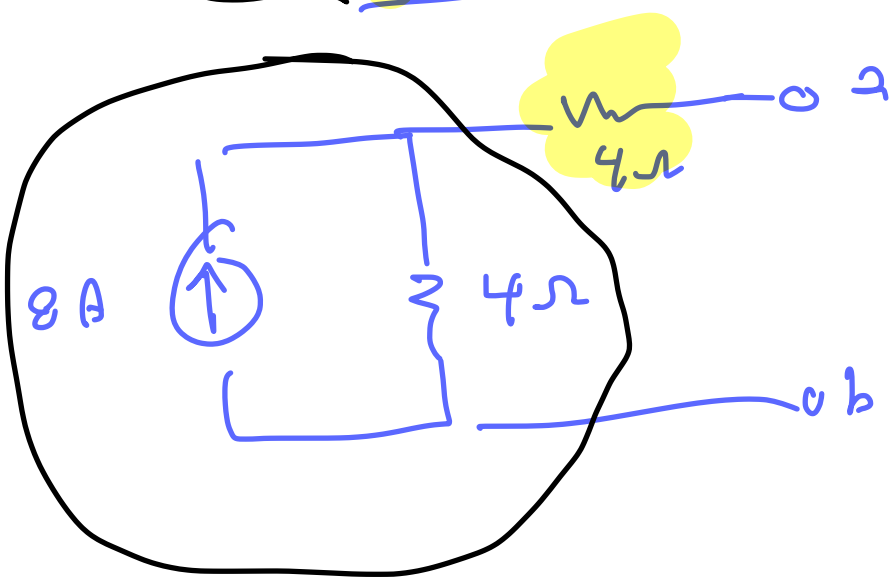

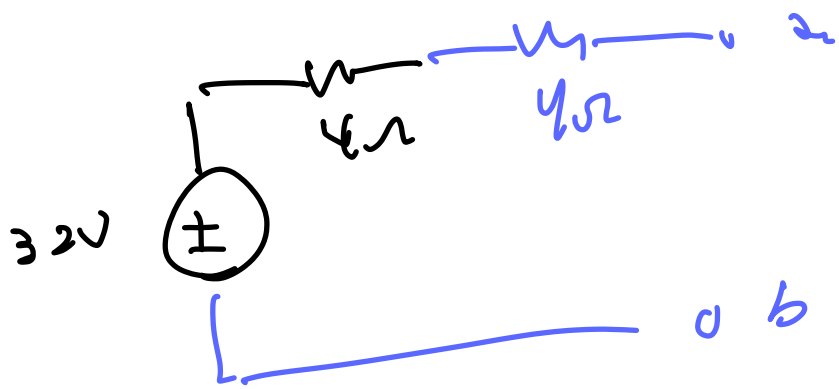

oc test

Example: find V_{th} and R_{Th}

$$V_{Th} = v_{OC}$$
$$R_{Th} = \frac{v_{OC}}{i_{SC}}$$

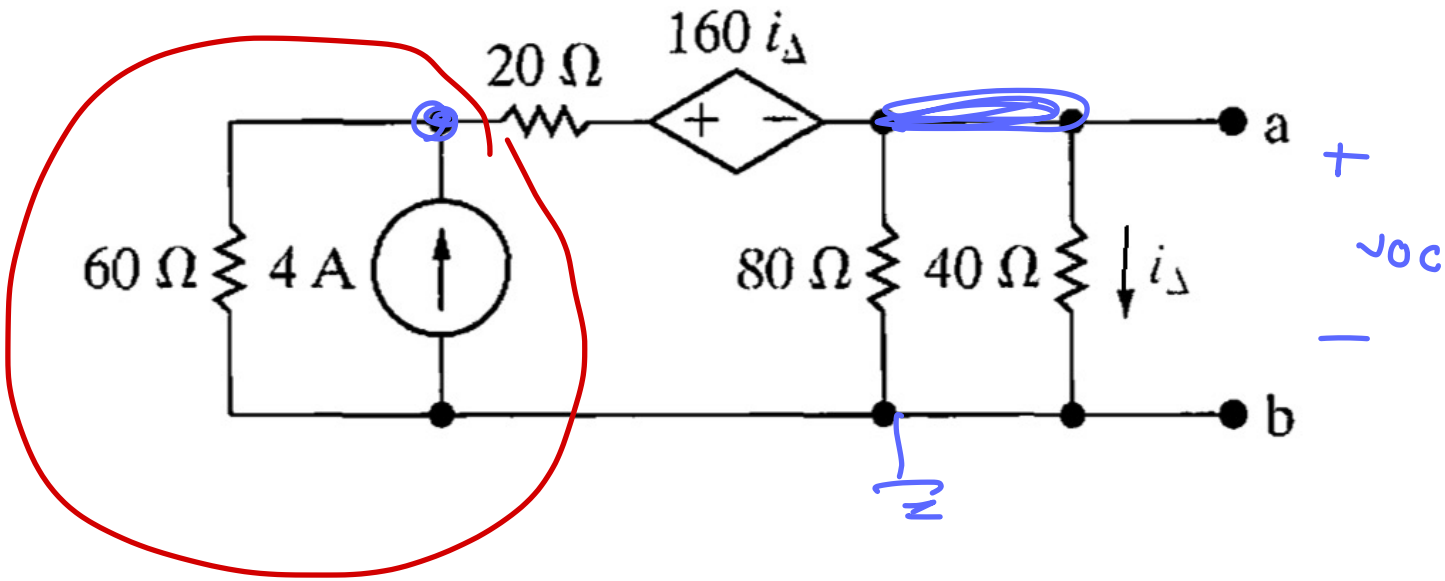

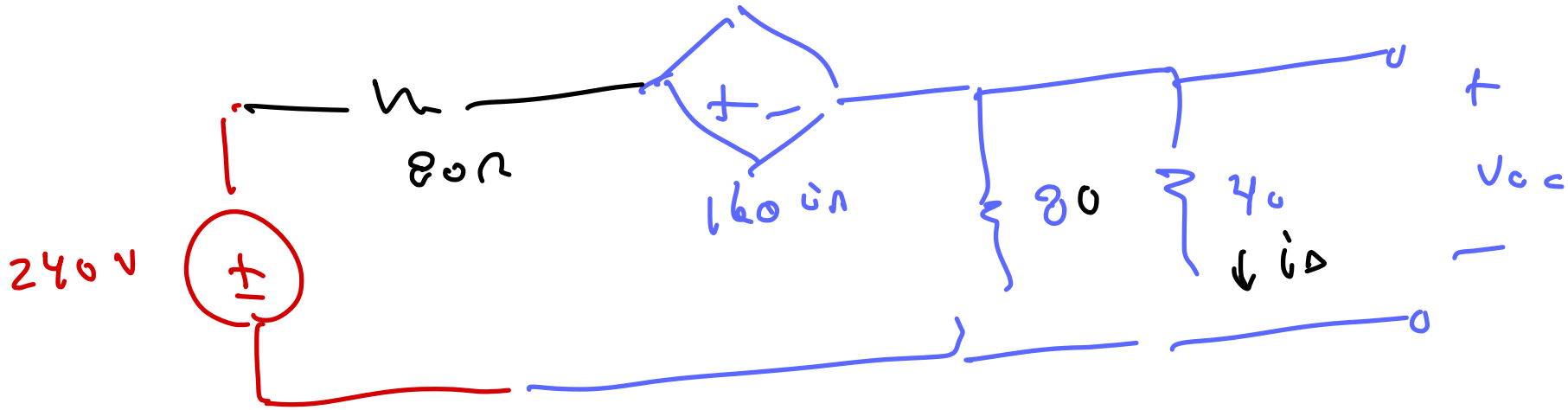

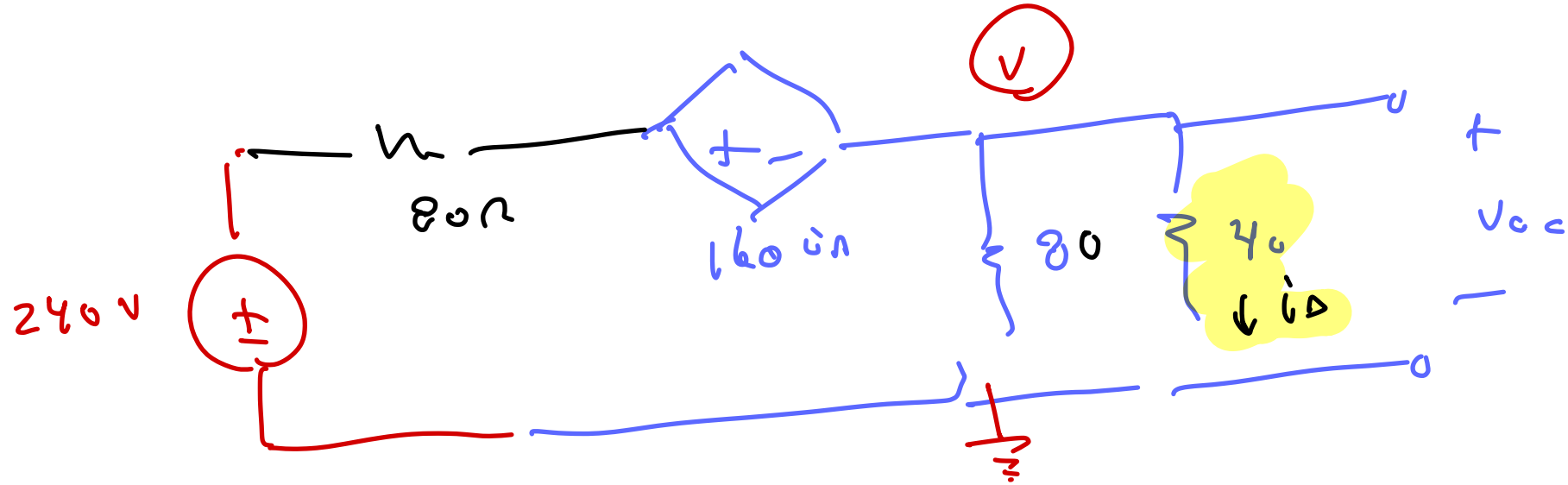

$$80\left(\frac{V}{80}+\frac{V}{40}+\frac{V+160\,i_\Omega-240}{80}=0\right)$$

$$i_\Omega=\frac{V}{40}$$

$$160\,i_\Omega=4V$$

$$V+2V+V+4V-240=0$$

$$8V=240$$

$$V=30\ V$$

$$\boxed{V_{TH}=30\ V}$$

$$V_{oc}$$

SC test

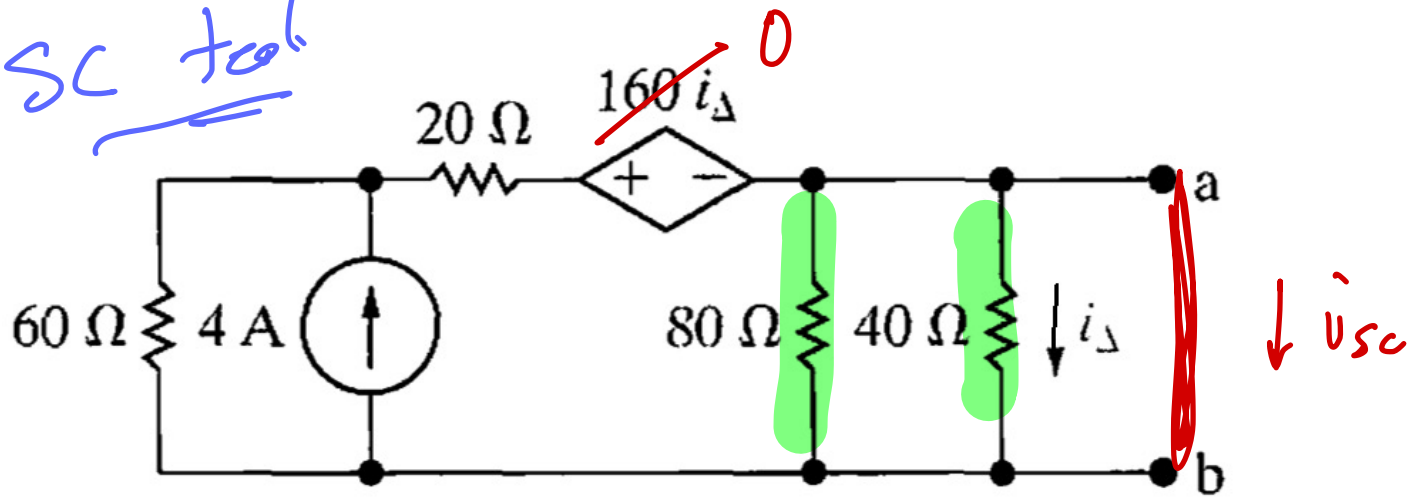

30 V, 10 Ω

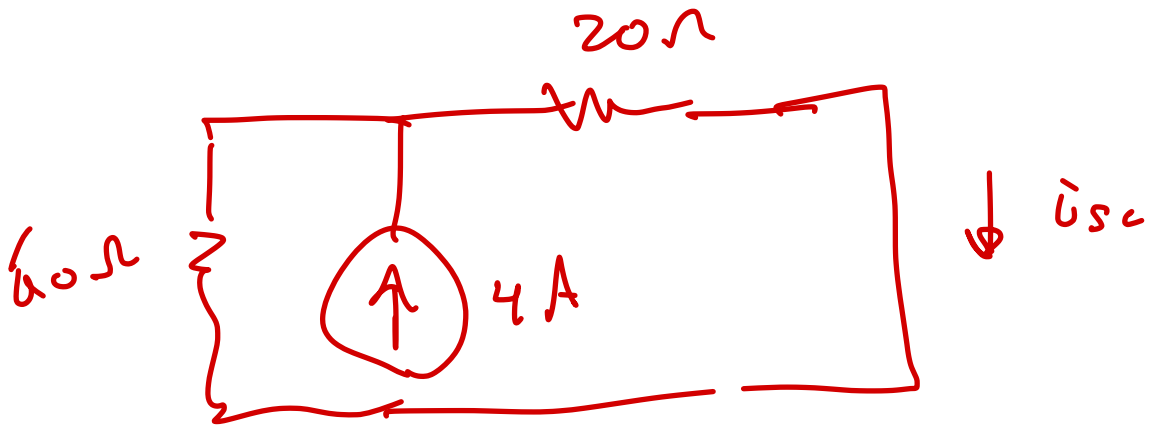

$$R_{TH} = \frac{v_{oc}}{i_{sc}} = \frac{30V}{3A}$$

$$= 10\,\Omega$$

$$i_{sc} = 4 \cdot \frac{60}{80} = 3A$$

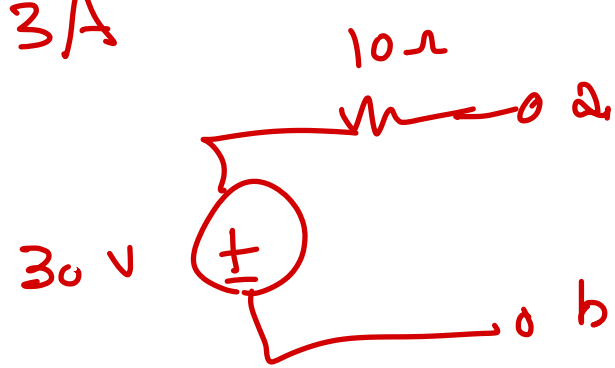

$\frac{9}{4}\ V, 30\ \Omega$

Practice problem: find V_{th} and R_{Th}

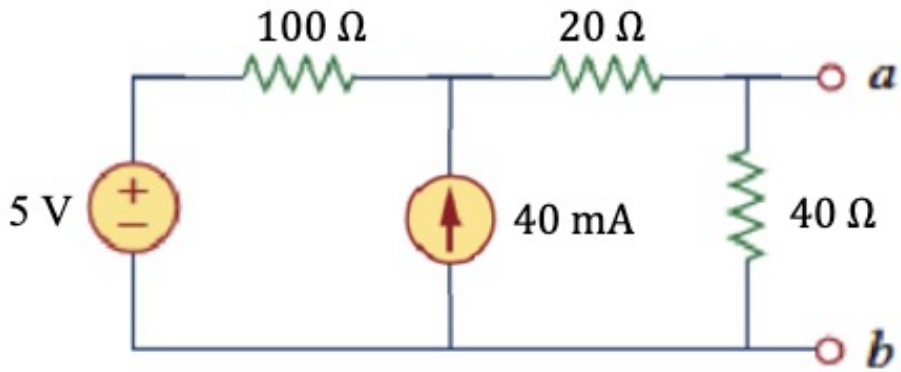

Practice problem: find V_{th} and R_{Th}

$23.0\ V, 44.6\ \Omega$

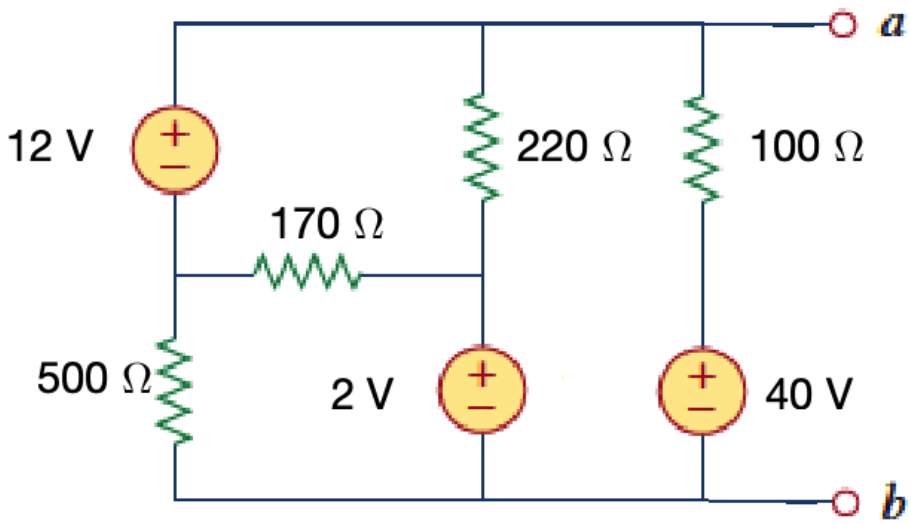

Practice problem: find V_{th} and R_{Th}

$200\ V, 14{,}3\ k\ \Omega$

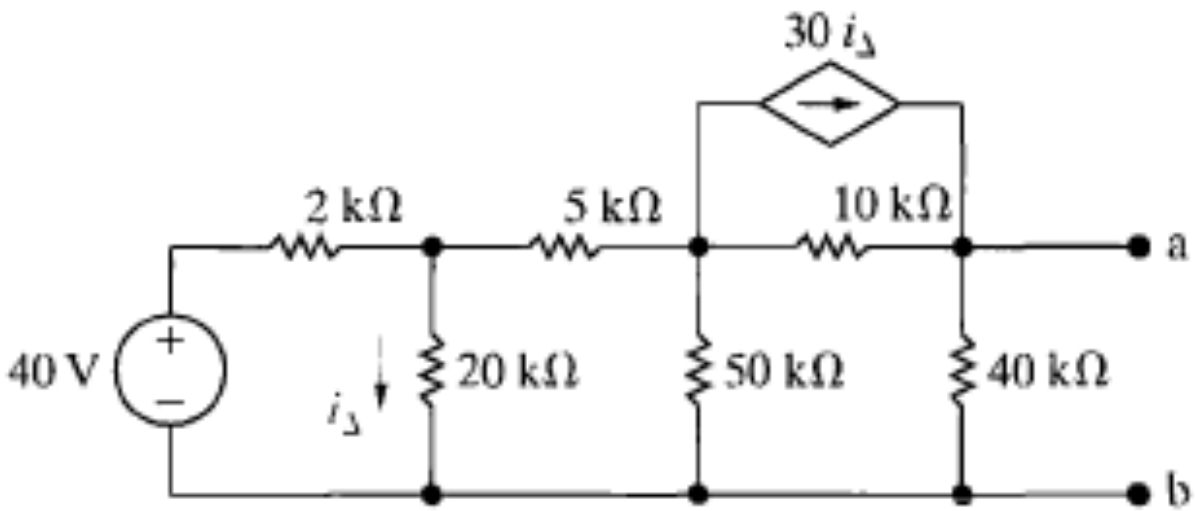

Practice problem: find V_{th} and R_{Th}
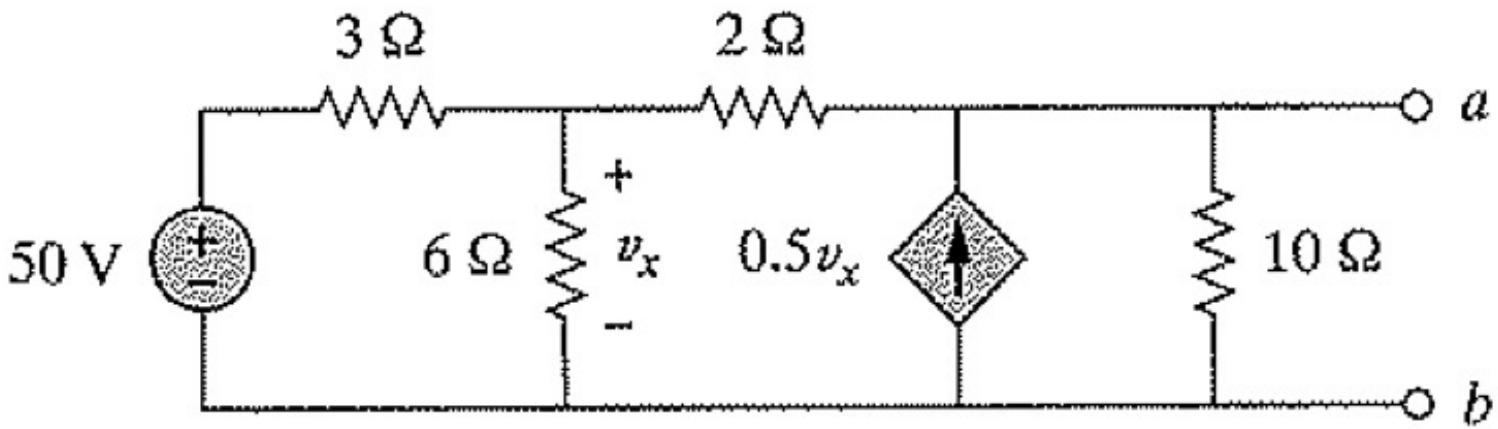
$\frac{500}{3}\ V, 10\ \Omega$