# Lecture 23
# Phasors – 9 of 9

design examples

# Lecture 23
# Phasors – 9 of 9

design examples

**Example:** Find C to maximize the magnitude of $i(t)$. What is the current?

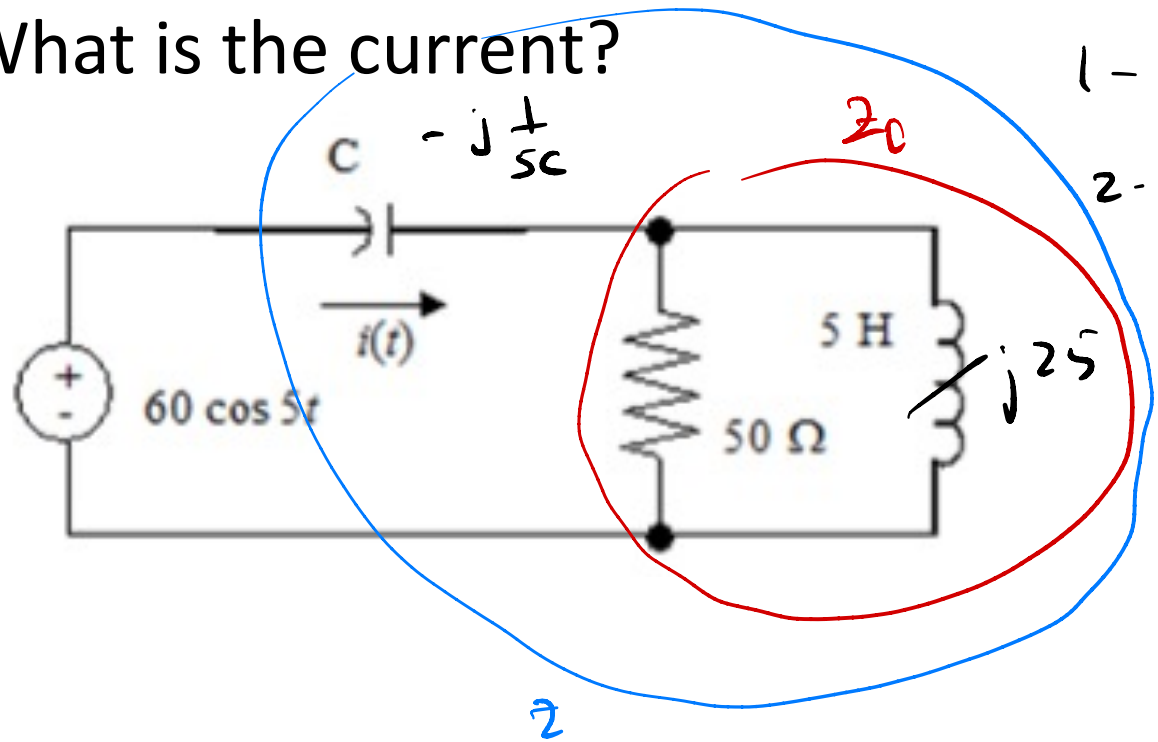


1- phasor - cmt

2- series/parallel cmb.

$$Z_p = \frac{(50)(j25)}{50+j25}$$

$$= \frac{j50}{2+j}\,\frac{(2-j)}{(2-j)}$$

$$= \frac{(j50)(2-j)}{5}$$

$$= 10+j20$$

$$Z = 10+j20-j\frac{1}{5C}$$

3- find current

$$I = \frac{60}{10+j\left(20-\frac{1}{5C}\right)}$$

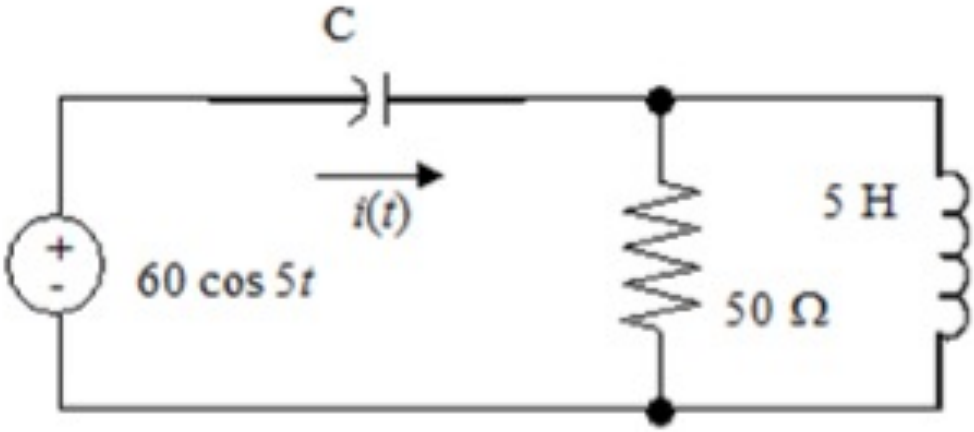


$$I = \frac{60}{10 + j\left(20 - \frac{1}{5C}\right)}$$

$$|I| = \frac{60}{\sqrt{10^2 + \left(20 - \frac{1}{5C}\right)^2}}$$

$$\text{ці} - \max |I| \Rightarrow \min \sqrt{\quad \cdots}$$

$$20 - \frac{1}{5C} = 0$$

$0.01\ F; 6 \cos 5t\ \ A$

**Example:** Find the resistor R* so that the magnitude of the current $i(t)$ is 1 A.

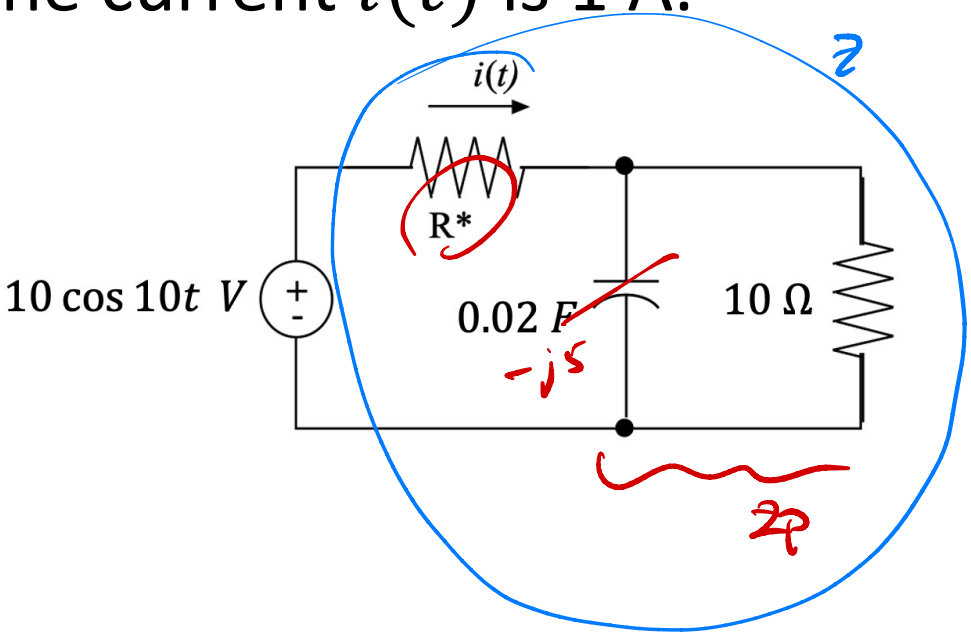


1- current

$$-j\frac{1}{10\cdot(.02)} = -j5$$

2- parallel

$$Z_p = \frac{(10)(-j5)}{10-j5}$$

$$= \frac{-j10}{2-j}\frac{(2+j)}{(2+j)}$$

$$= \frac{10-j20}{5}$$

$$= 2-j4$$

3- series

$$Z = R^* + 2-j4$$

4- find I

$$I = \frac{10}{R^* + 2-j4}$$

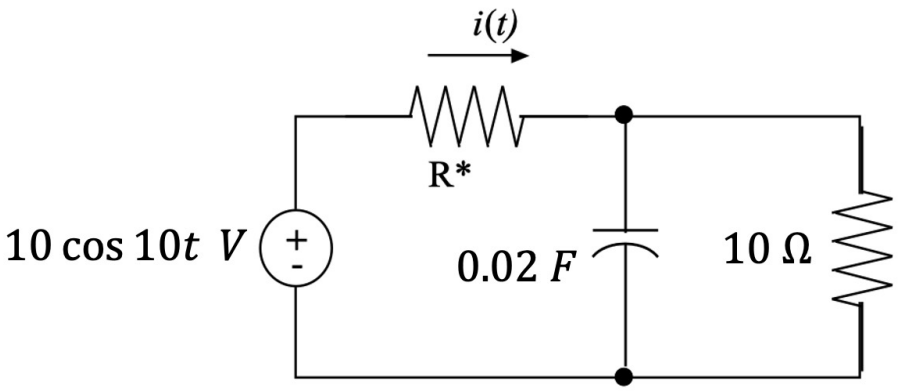


$|I| = \frac{10}{|Z|}$

$Z = R^* + 2 - j4$

need $|Z| = 10$

$|Z| = \sqrt{(R^*+2)^2 + 16} = 10$

$(R^*+2)^2 + 16 = 100$

$(R^*+2)^2 = 84$

$R^* = \sqrt{84} - 2$

7.17 Ω

**Example:** Find the inductor value to maximize the magnitude of the voltage appearing across the capacitor. What is that magnitude?

1 - current

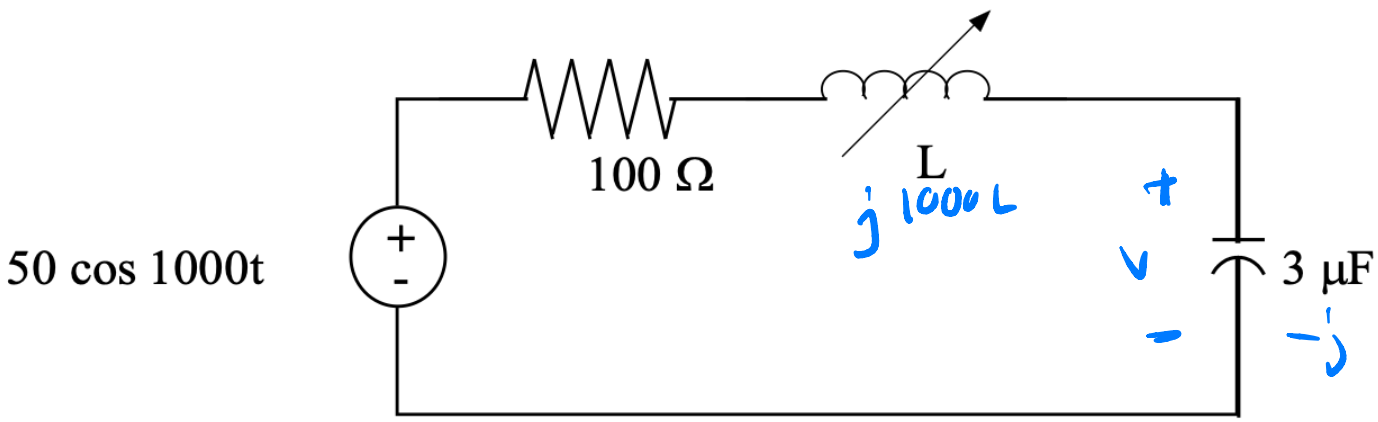


$-j\frac{10^6}{1000\,3} = -j\frac{1000}{3}$

2- volt. div

$$v = 50 \cdot \frac{-j\,1000/3}{100 + j\left(\underbrace{1000L - \frac{1000}{3}}_{=0}\right)}$$

$1000L = \frac{1000}{3}$

$L = 1/3$ H

50 cos 1000t

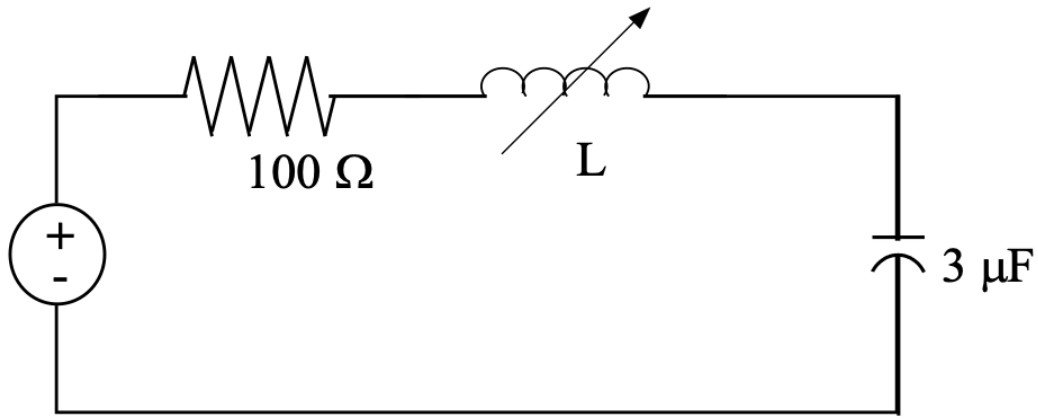


$\frac{1}{3}$ H, 167 V

**Example:** what value for resistor $R_1$ results in the two currents, $i_1$ and $i_2$, having the same <u>magnitude</u> (but might be different phase angles)? What is that magnitude?

1- current

2- series ckt

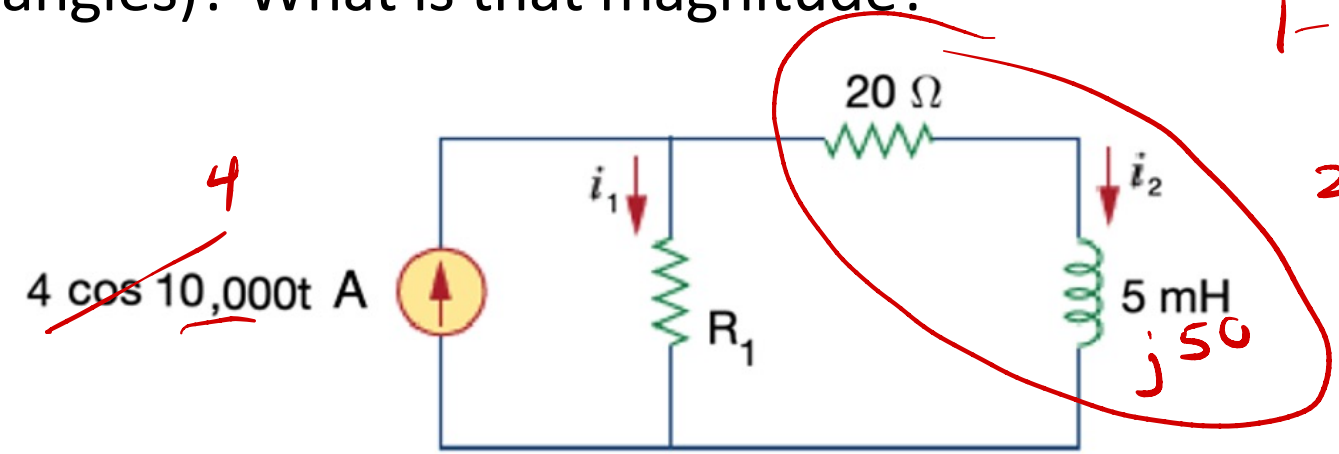


20+j50

$$I_1 = 4\,\frac{20+j50}{R_1+20+j50} \qquad I_2 = 4\cdot\frac{R_1}{R_1+20+j50}$$

$$|I_1| = 4\cdot\frac{\sqrt{20^2+50^2}}{\sqrt{(R_1+20)^2+50^2}} \qquad |I_2| = 4\cdot\frac{R_1}{\sqrt{(R_1+20)^2+50^2}}$$

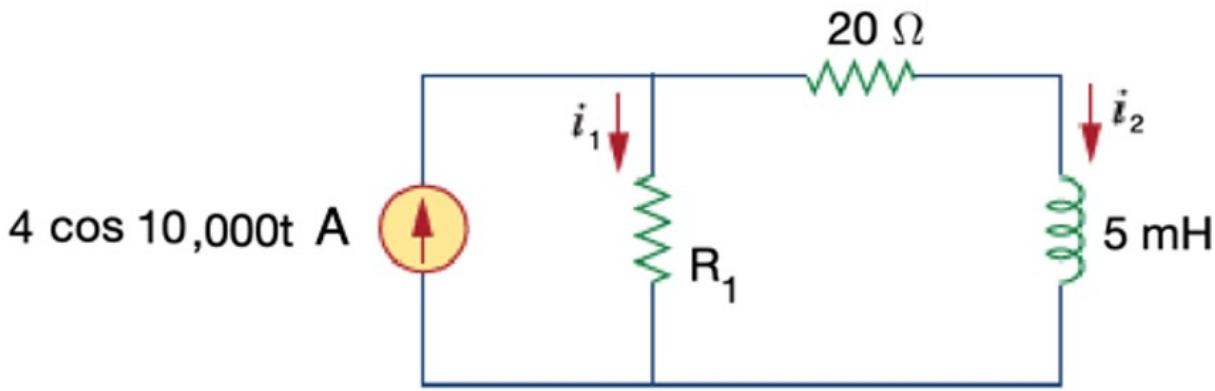


$$\cancel{4} \cdot \frac{\sqrt{20^2+50^2}}{\cancel{\sqrt{(R_1+20)^2+50^2}}} = \cancel{4} \cdot \frac{R_1}{\cancel{\sqrt{(R_1+20)^2+50^2}}}$$

$$R_1 = \sqrt{20^2+50^2}$$

53.9 Ω; 2.42 $A$

**Practice problem:** find the inductor value so that the current $i$ is "in phase" with the voltage source. What is $i(t)$?

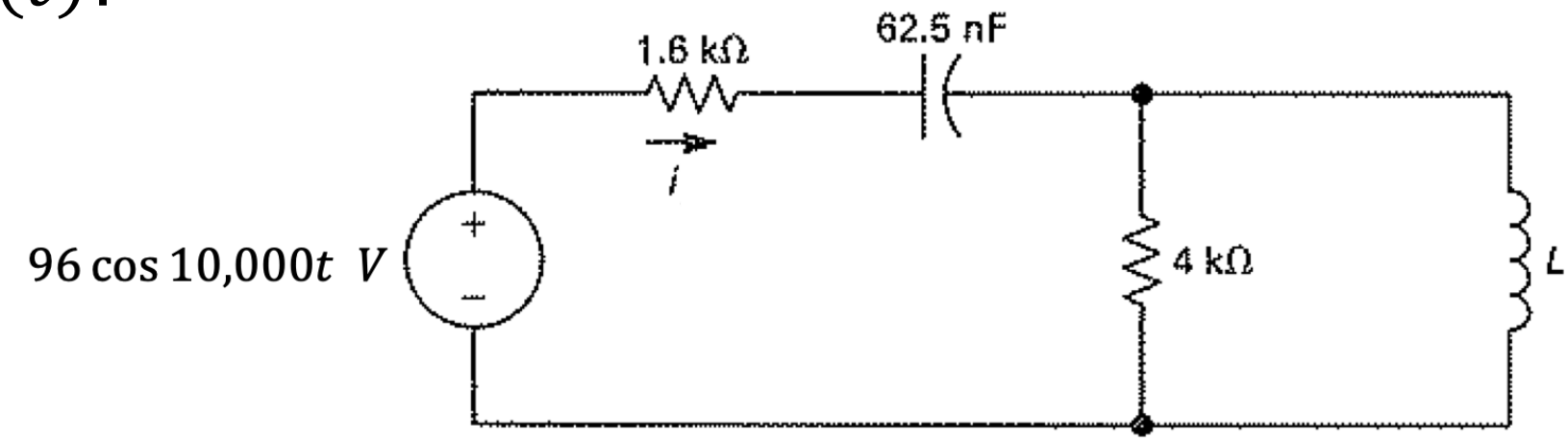


$0.8\ H, 20\cos(10{,}000t)\ mA;\ 0.2\ H, 405\cos(10{,}000t)\ mA$

**Practice problem: f**ind the capacitor value to maximize the magnitude of the voltage appearing across the capacitor. What is that magnitude?

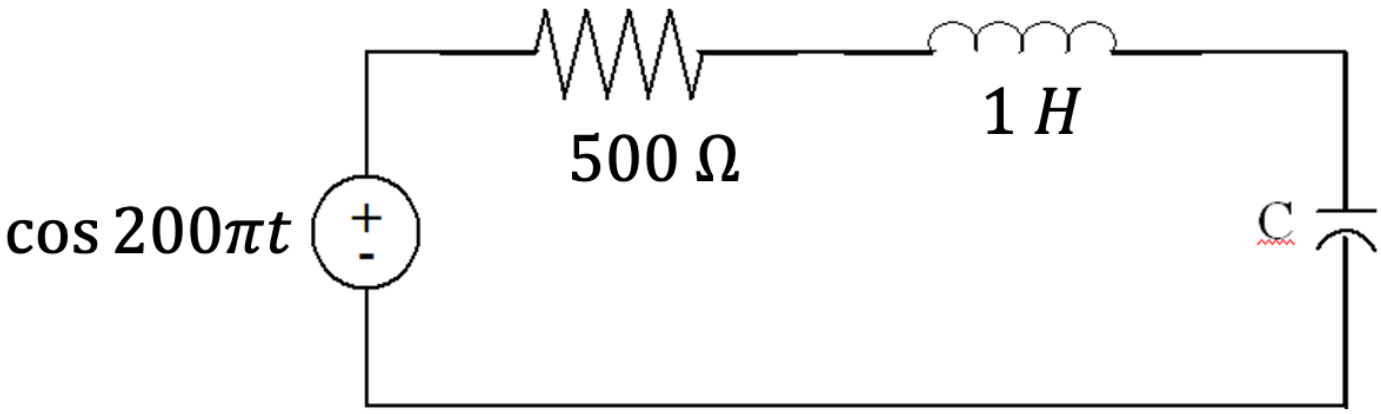


$1.55\ \mu F, 1.61\ V$