Lecture 27
Theorems – 4 of 6

maximum power transfer

Power Transfer

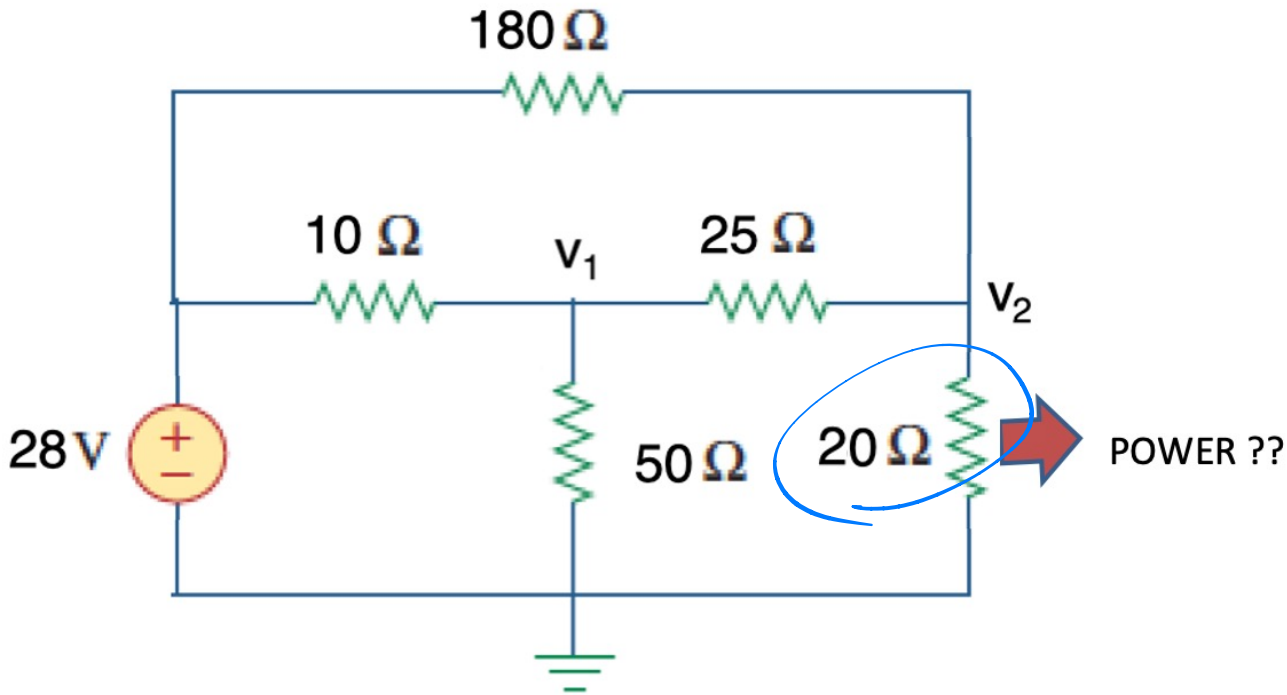

- How much power is dissipated in the 20 Ω resistor?
  - Method: node analysis → $v_2 = 10$ V
  - Power calculation $P = \frac{{v_2}^2}{20} = \frac{10^2}{20} = 5$ W

- Question – if the resistance was larger/smaller than $20\ \Omega$ could it take more power from the circuit?

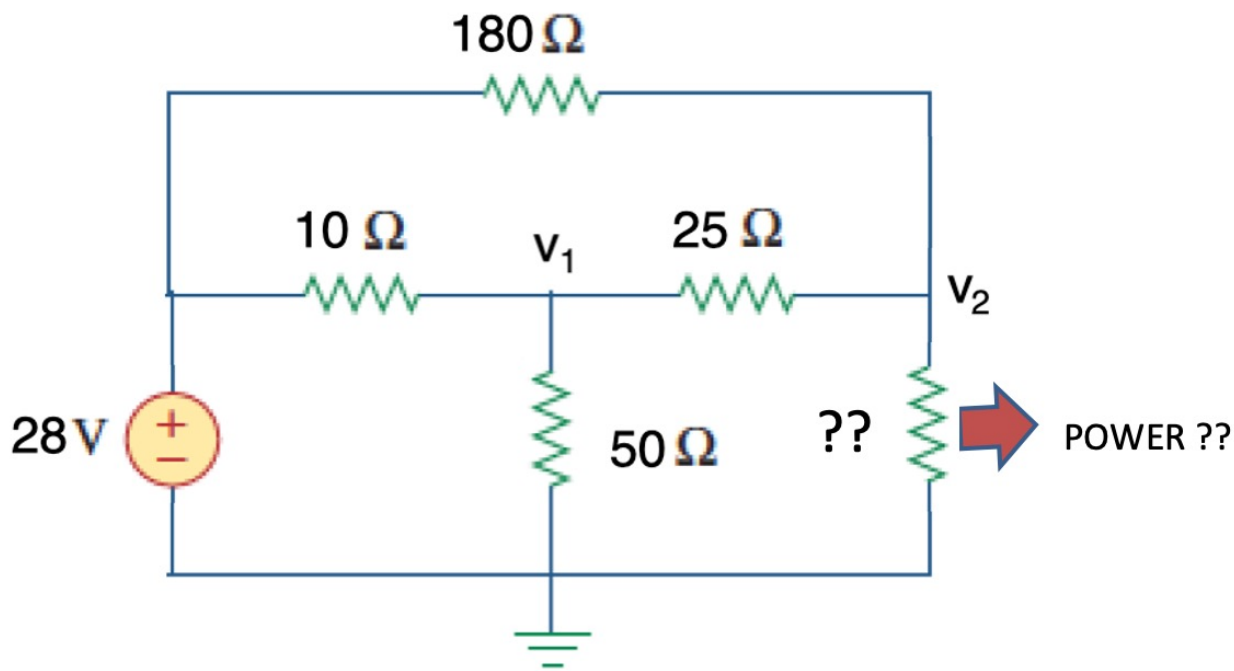

- Approach 1 – solve for power in terms of R
  - MatLab symbolic tools:

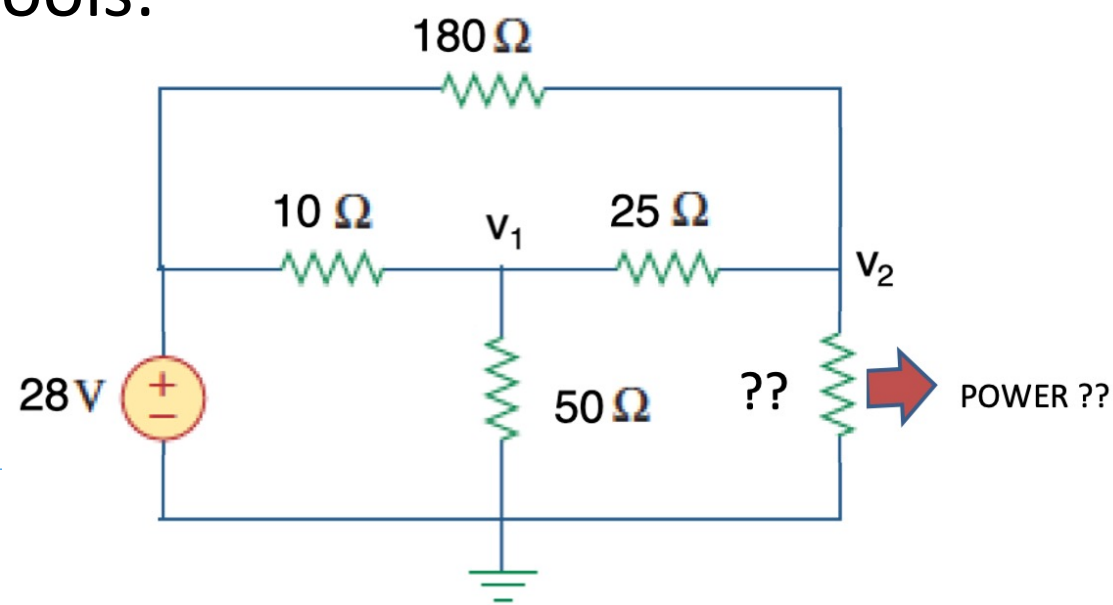


```
%% setup problem
syms v1 v2 R
[s1,s2] = solve( v1/50+(v1-28)/10+(v1-v2)/25==0, ...
    v2/R+(v2-v1)/25+(v2-28)/180==0,v1,v2)
pow = s2^2/R;
%% check for R = 20 ohms
subs(s2,R,20)
subs(pow,R,20)
```

```
ans =
10
ans =
5
```

- Optimize

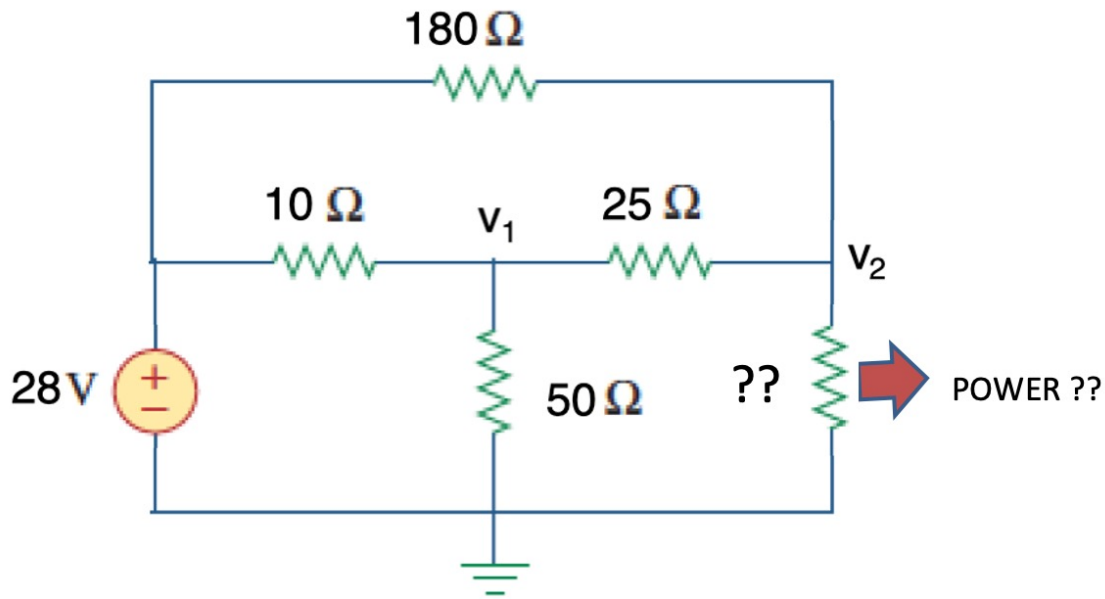


```
% optimize over R
dpow = diff(pow,R);
Rstar = solve(dpow)
eval( subs(pow,R,Rstar) )
```

```
Rstar =
225/8
ans =
  5.1467e+00
```

$$R^* = \frac{225}{8} = 28.1\ \Omega \qquad P_{max} = 5.15\ W$$

- What's going on?

$$P = \frac{148225\,R}{4\,(8R + 225)^2}$$

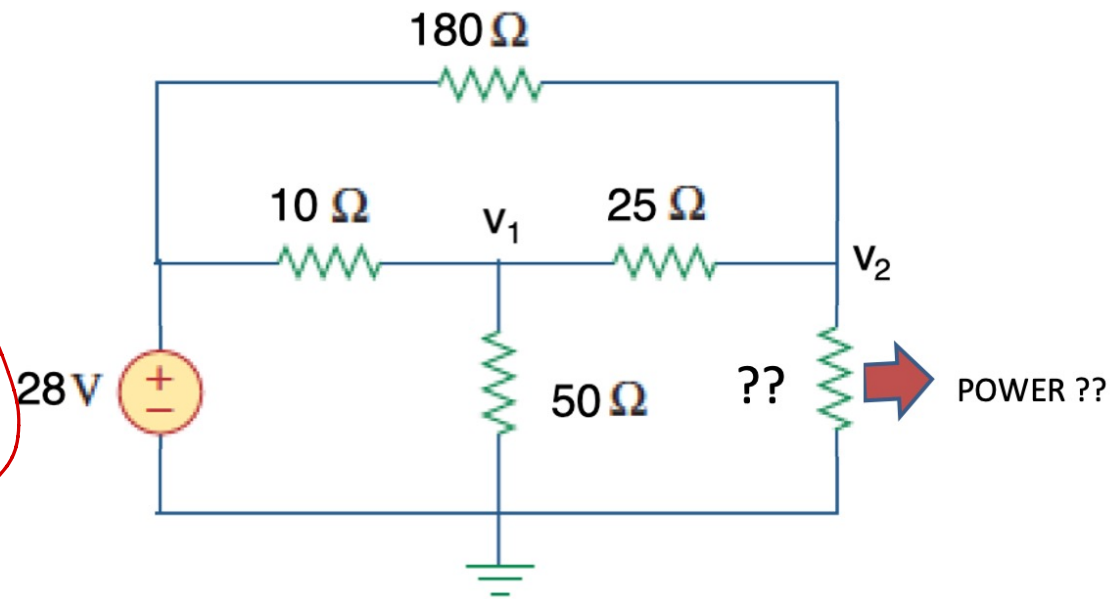

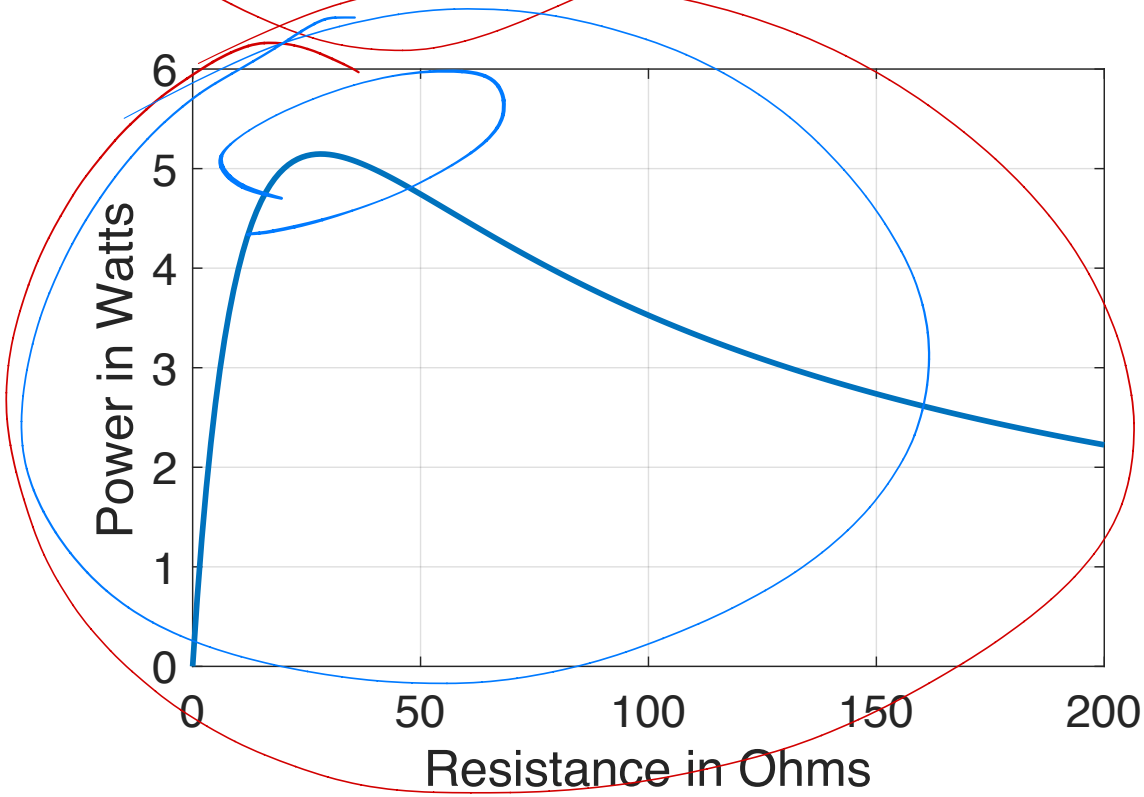


```
Rv = 0:200;
Pv = subs(pow,Rv);
plot(Rv,Pv)
```

Maximum Power Transfer

- Consider connecting a "load" resistance, R_L, across two points of a circuit
- What happens as it varies?
  - Current
  - Voltage
  - Power

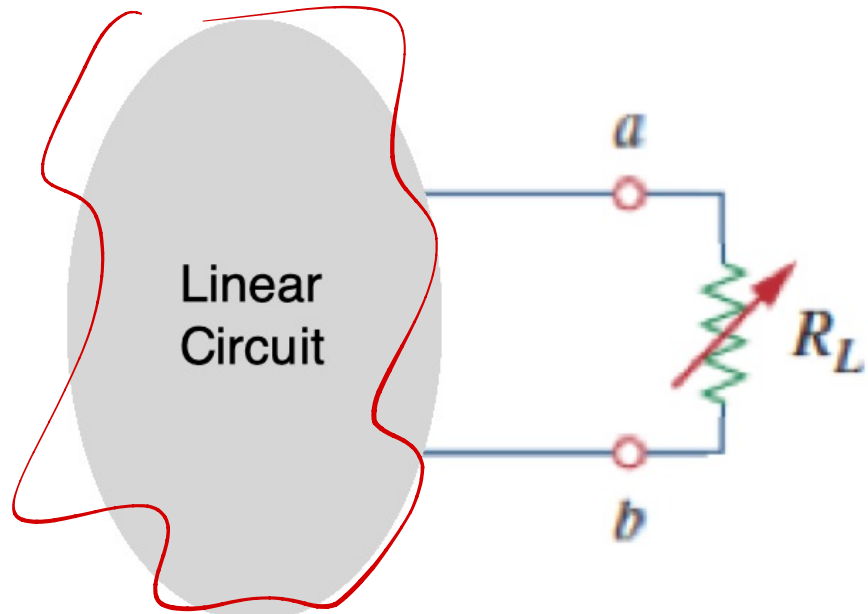

- Use the Thevenin model

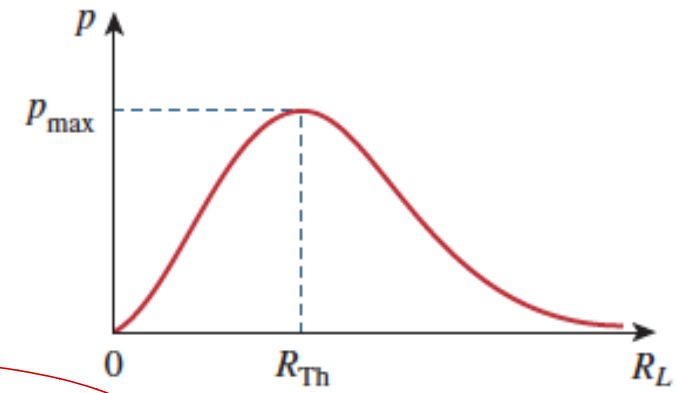

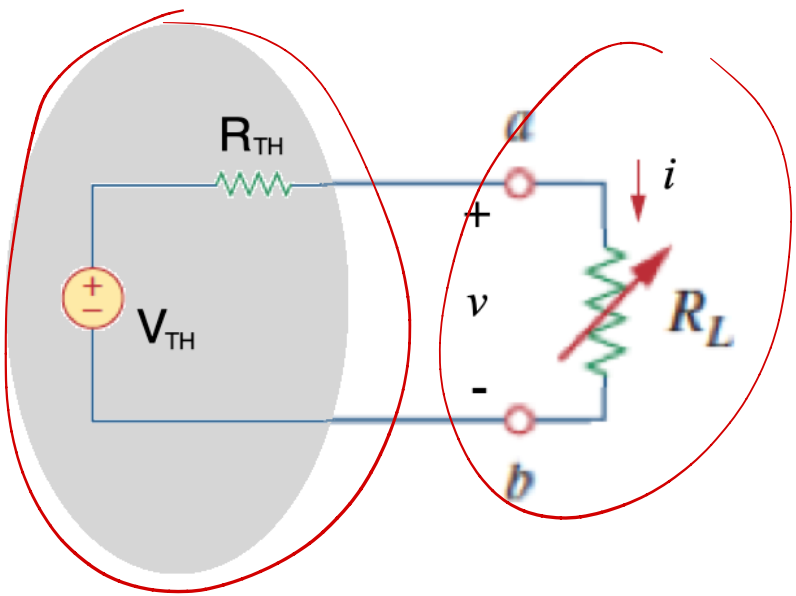

$$v = \frac{R_L}{R_L + R_{th}} v_{th}$$

$$p = \frac{v^2}{R_L} = \frac{R_L}{(R_L + R_{th})^2} v_{th}^2$$

- $\frac{\partial p}{\partial R_L} = 0$ yields a max of $P_{max} = \frac{V_{th}^2}{4R_{th}}$ when $R_L = R_{th}$

Example: find a load resistance to dissipate maximum power

$20\ \Omega, 20\ W$

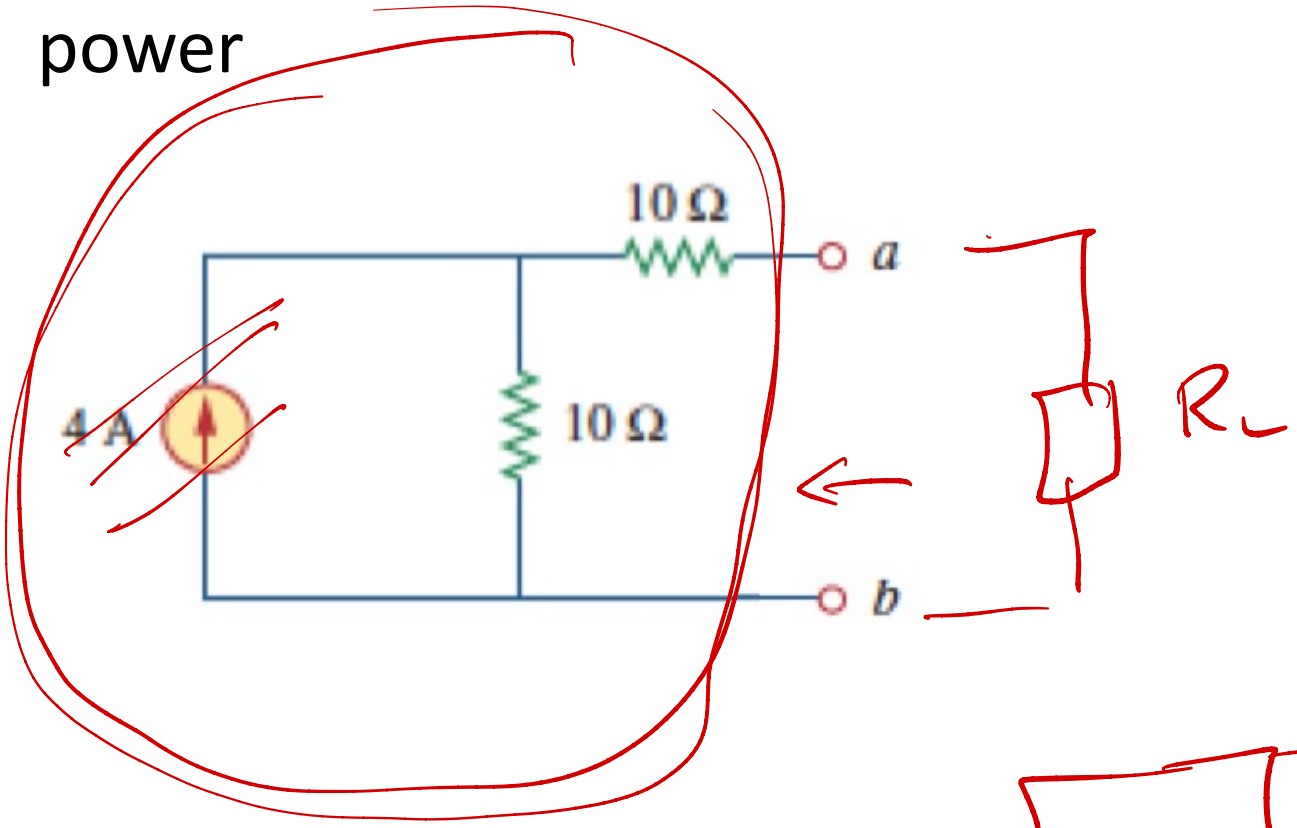

$R_{TH} = 20\ \Omega$

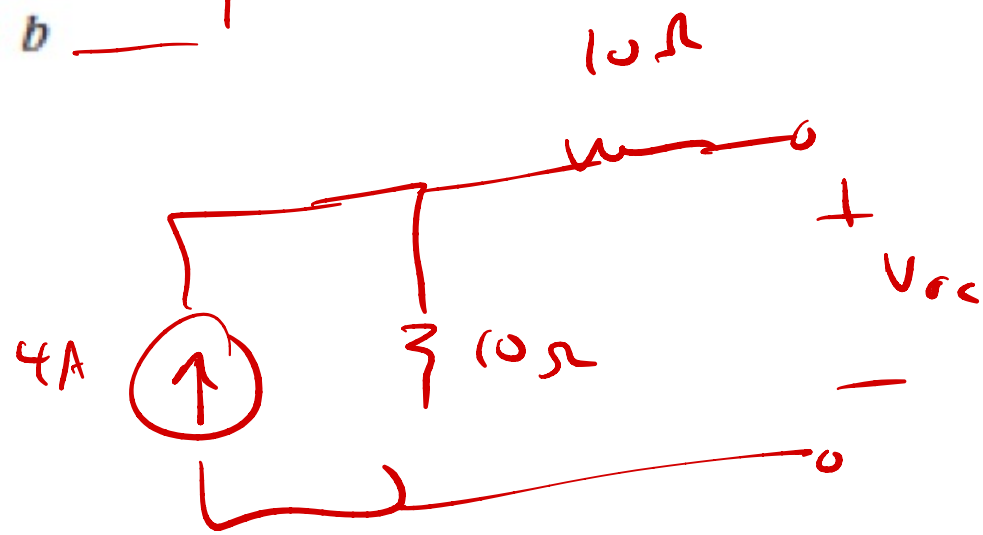

$V_{TH} = V_{oc} =$

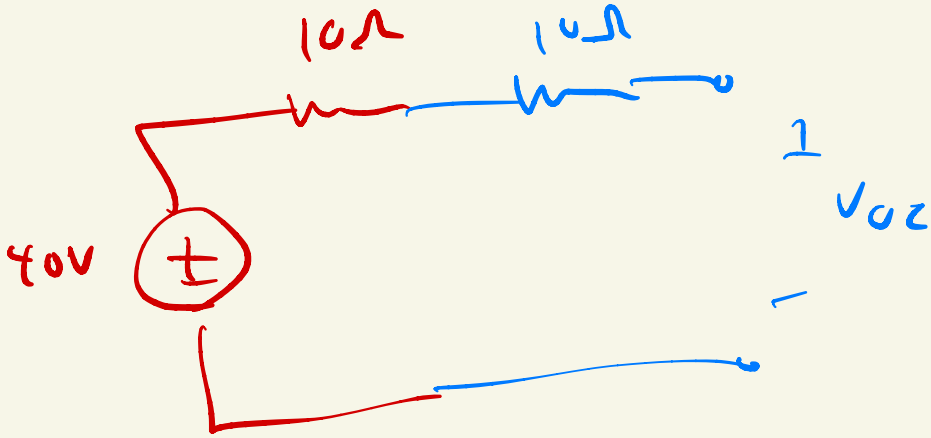

$V_{oc} = 40$

$$P = \frac{V_{th}^2}{4R_{th}} = \frac{40^2}{4 \cdot 20}$$

$=$

Example: find the load that dissipates maximum power

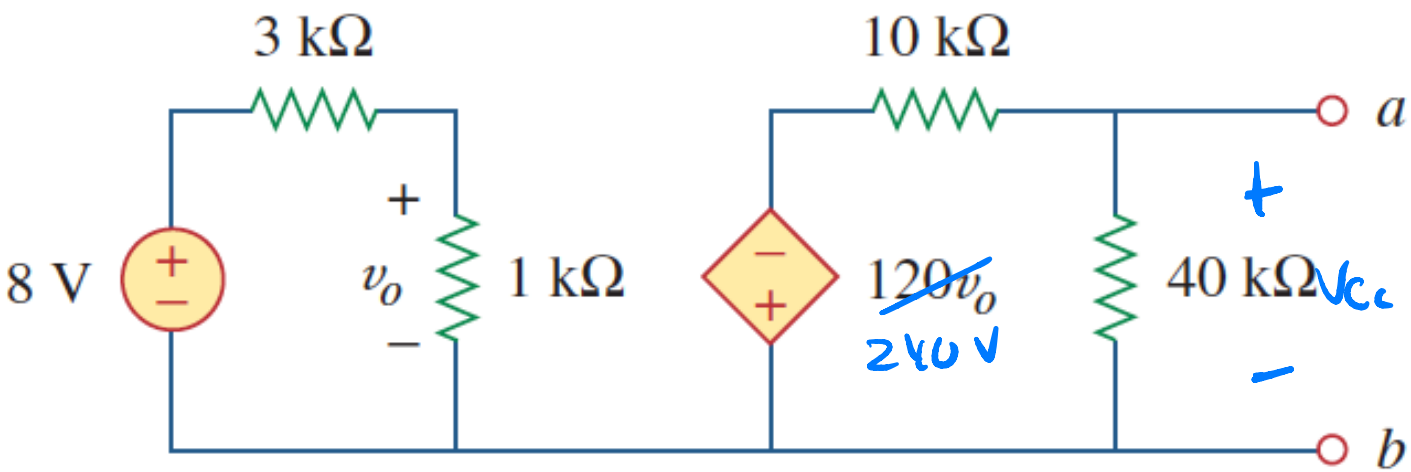

V_{oc} : volt div

$v_1 = \frac{1}{4} \cdot 8 = 2\,V$

$V_{oc} = \frac{40}{50}(-240) = -196\,V = V_{TH}$

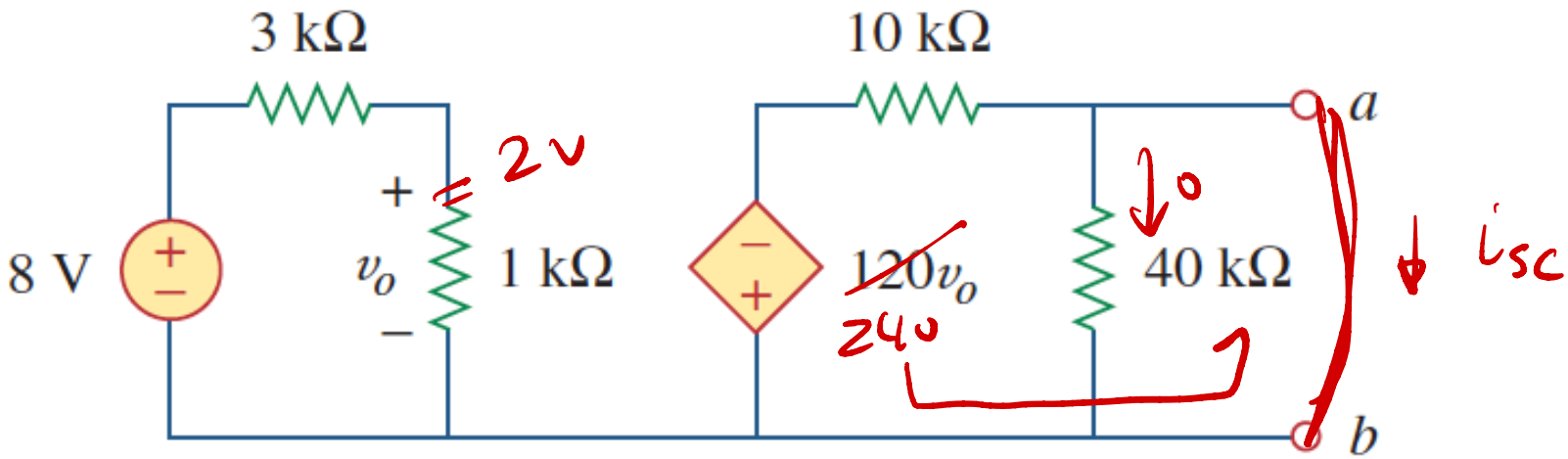

I_{sc}

$$i_{sc} = -\frac{240}{10k} = -24 \text{ mA}$$

$$R_{th} = \frac{V_{th}}{I_{sc}} = \frac{-192}{-.024} =$$

$$P = \frac{V_{th}^2}{4R_{th}} = \frac{(-192)^2}{4 \cdot 8000}$$

8 kΩ

Example (trick): find R to maximum the power delivered to the 10 ohm resistor

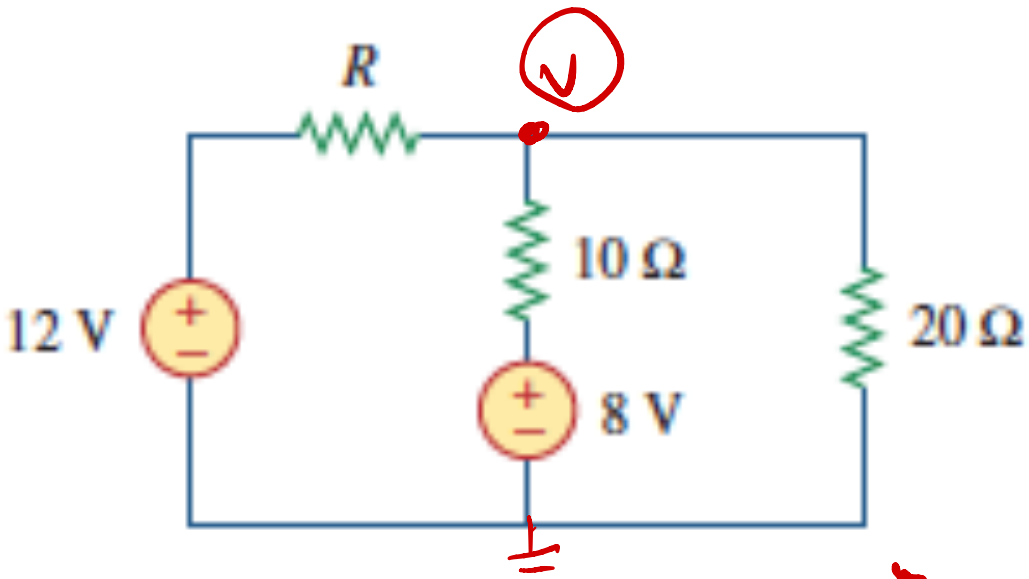

Note - not the right form for max power method

- try analysis

1 - use KCL to find v

2 - $P_{10} = \frac{(v-8)^2}{10}$

Example (trick): find R to maximum the power delivered to the 10 ohm resistor

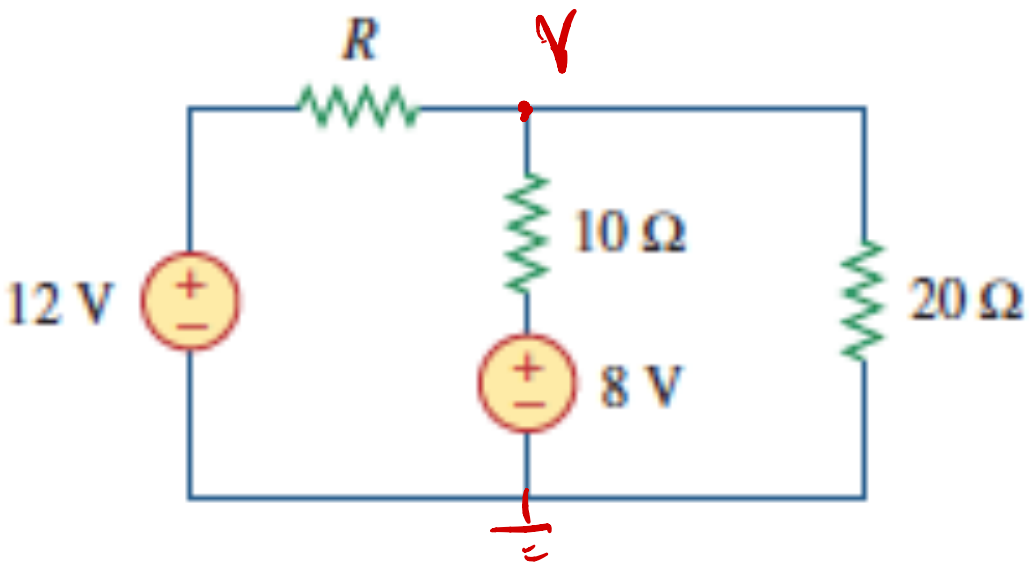

1 – Use KCL

$$\left(\frac{V-12}{R} + \frac{V-8}{10} + \frac{V}{20} = 0\right) 20R$$

$$20V - 240 + 2RV - 16R + RV = 0$$

$$V(20+3R) = 240+16R$$

$$\boxed{V = \frac{16R+240}{3R+20}}$$

Example (trick): find R to maximum the power delivered to the 10 ohm resistor

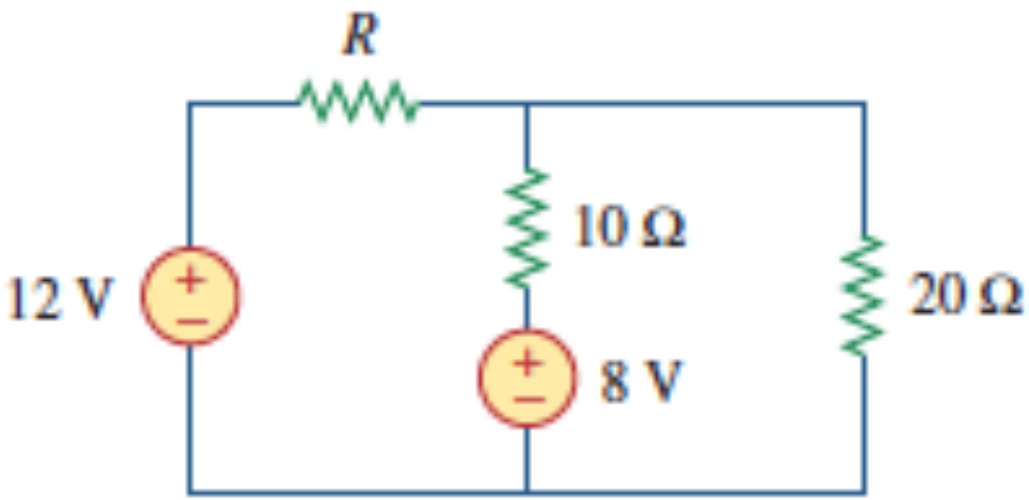

$$P_{10} = \frac{(v-8)^2}{10}$$

max P at max $(v-8)^2$

$$(v-8)^2 = \left(\frac{16R+240}{3R+20} - 8\right)^2 = \frac{(-8R+80)^2}{(3R+20)^2}$$

max over R by $\frac{d}{dR} = 0$

$$\frac{d}{dR} = \frac{(3R+20)^2\, 2(-8R+80)(-8) - (-8R+80)^2\, 2(3R+20)(3)}{(3R+20)^4}$$

set numerator to 0

$$N = (3R+20)(-8R+80)\left[-16(3R+20) - 3(-8R+80)\right]$$

$$= \underbrace{(3R+20)}_{\neq 0}\underbrace{(-8R+80)}_{\substack{=0 \\ \text{at } R=10}}\underbrace{(-72R-80)}_{\neq 0}$$

analysis

$R = 10$ then $V = \frac{400}{50} = 8$

and $P = 0$

i.e. a minimum

try $0, \infty$

$R = 0$ then $V = 12$, $P = 1.6$

$R = \infty$ then $V = \frac{16}{3}$ $P = .77$

$\Rightarrow \boxed{R = 0}$

$1.6\ \Omega, \frac{5}{8}\ W$

Practice problem: maximize the power to R

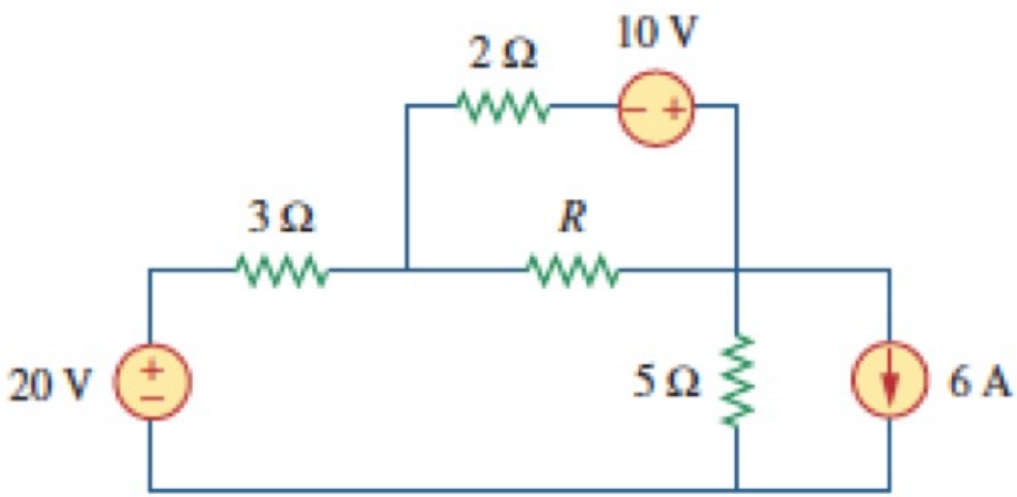

$3\ k\Omega, 468\ mW$

Practice problem: maximize the power to R_o

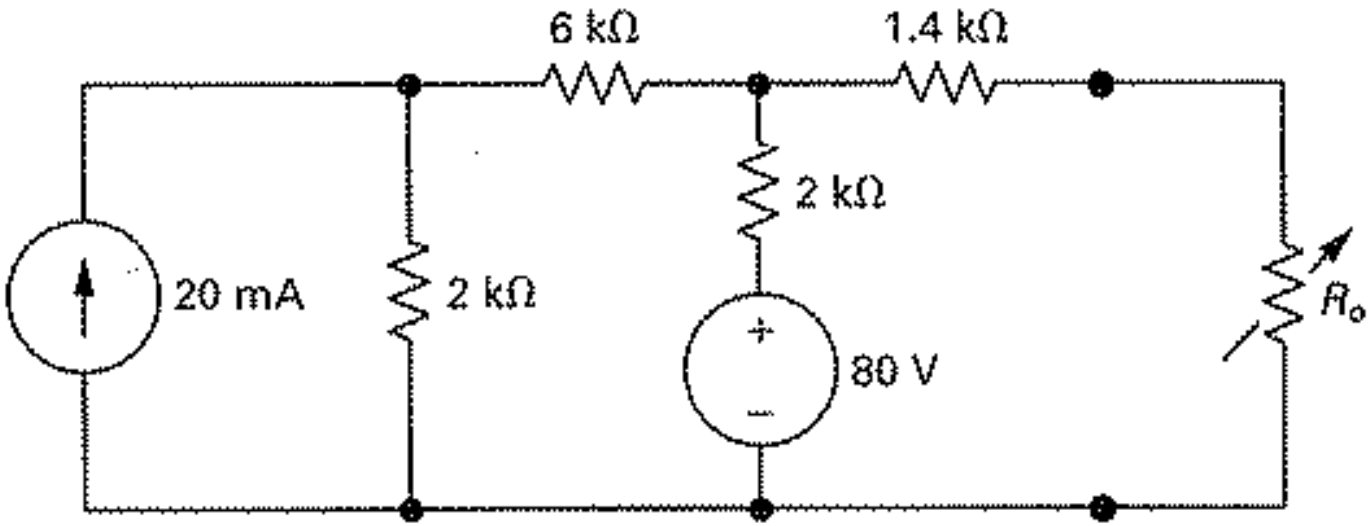

$7.5\ \Omega, 333\ W$

Practice problem: maximize the power to R_o

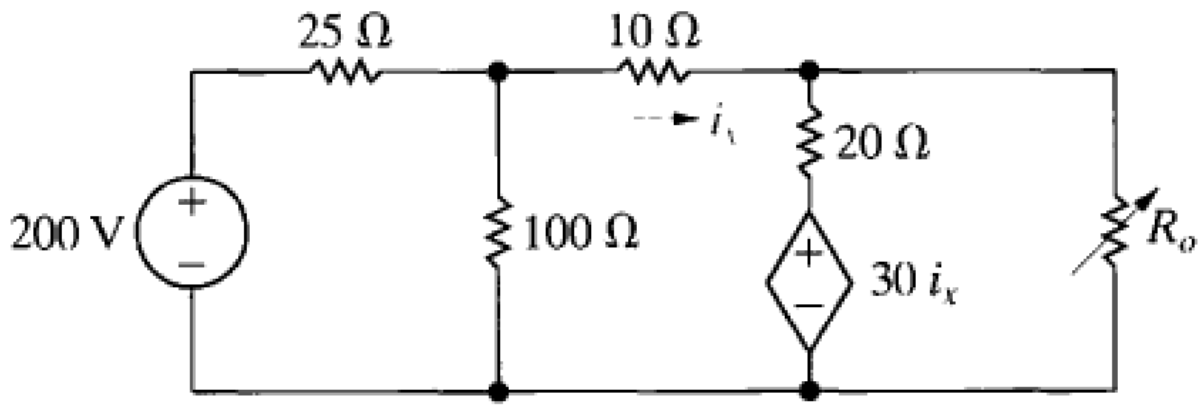

$3\ \Omega, 1.2\ kW$

Practice problem: maximize the power to R

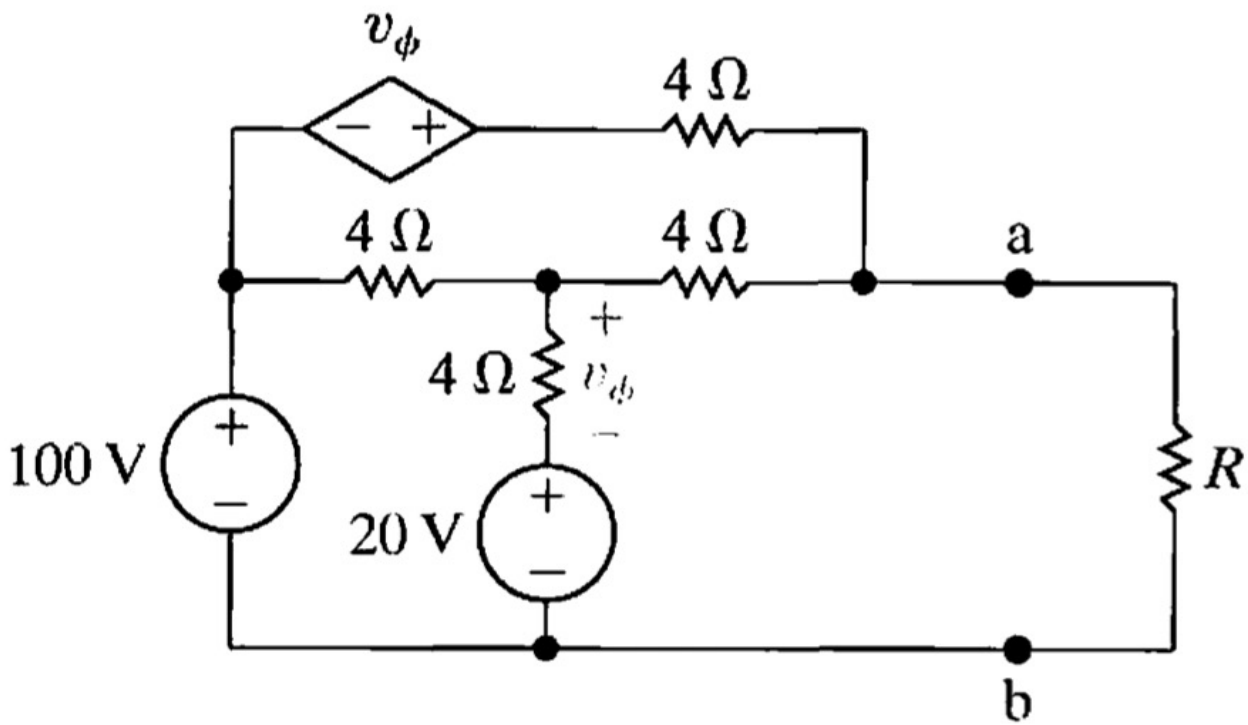

$4\ k\Omega, 9\ mW$
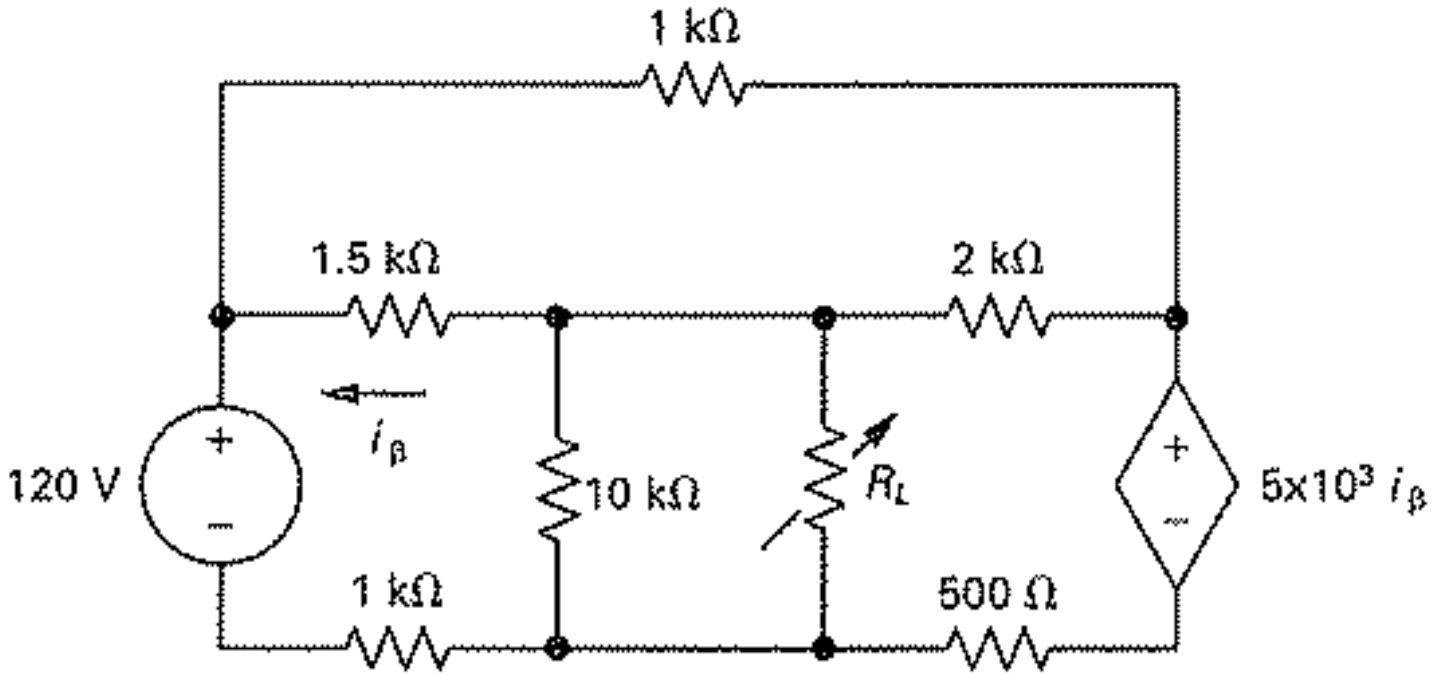
Practice problem: maximize the power to R_L