Lecture 30
1st Order Transients – 1 of 5

concepts

Where are we?

- Resistive circuits:
  - Simple elements; Kirchhoff's and Ohm's Laws
  - Nodal analysis
- Inductors and capacitors
  - Steady state (phasor) analysis
- Op amps
- Circuit theorems:
  - Thevenin/Norton, maximum power
- **Transients:**
  - **1st order circuits**
  - **2nd order circuits**
- Mesh analysis

Recall the 1st Phasor Circuit

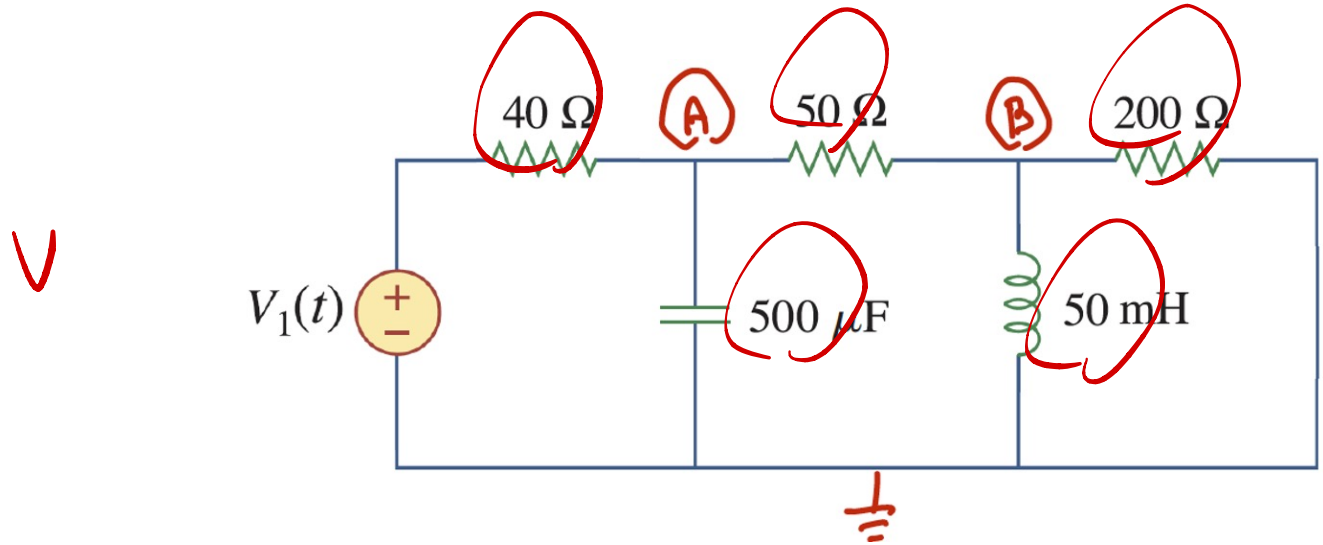

- Characterized by the 2nd order differential equations

$$\frac{d^2A(t)}{dt^2} + 858\,\frac{dA(t)}{dt} + 72{,}000\,A(t) = 50\,\frac{dV_1(t)}{dt} + 40{,}000\;V_1(t)$$

$$\frac{d^2B(t)}{dt^2} + 858\,\frac{dB(t)}{dt} + 72{,}000\,B(t) = 40\,\frac{dV_1(t)}{dt}$$

$$\frac{d^2A(t)}{dt^2} + 858\ \frac{dA(t)}{dt} + 72{,}000\ A(t) = 50\ \frac{dV_1(t)}{dt} + 40{,}000\ V_1(t)$$

$$\frac{d^2B(t)}{dt^2} + 858\ \frac{dB(t)}{dt} + 72{,}000\ B(t) = 40\ \frac{dV_1(t)}{dt}$$

- Homogeneous solutions are exponentials

$$A_{homogeneous}(t) = a_1 e^{-94.3t} + a_2 e^{-764t}$$

$$B_{homogeneous}(t) = b_1 e^{-94.3t} + b_2 e^{-764t}$$

$$\frac{d^2A(t)}{dt^2} + 858\ \frac{dA(t)}{dt} + 72{,}000\ A(t) = 50\ \frac{dV_1(t)}{dt} + 40{,}000\ V_1(t)$$

$$\frac{d^2B(t)}{dt^2} + 858\ \frac{dB(t)}{dt} + 72{,}000\ B(t) = 40\ \frac{dV_1(t)}{dt}$$

- Now, imagine that $V_1(t) = V_1$ is a constant (DC) voltage source; then the particular solutions are both constants

$$A_{steady-state}(t) = a_0\left(= \frac{5\ V_1}{9}\right)$$

$$B_{steady-state}(t) = b_0(= 0)$$

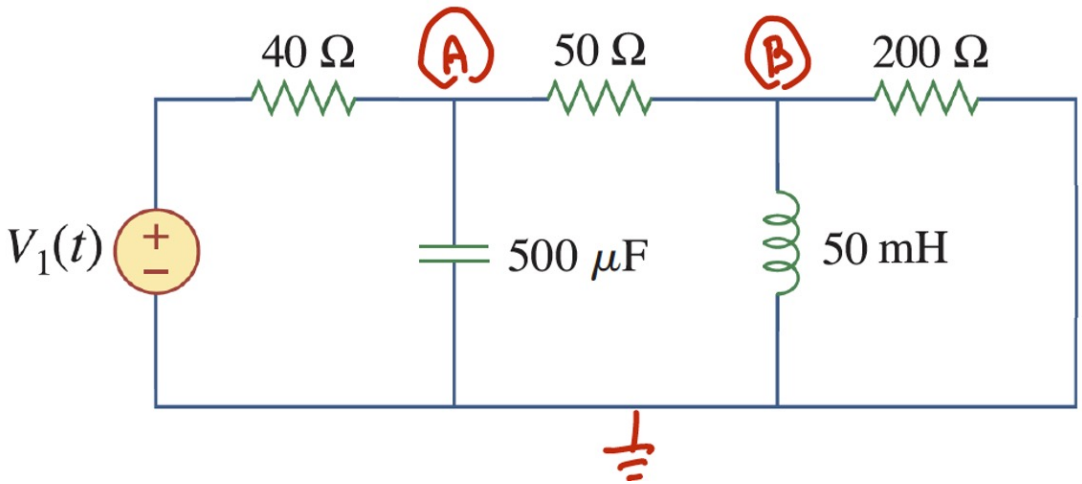

- So, combining

$$A(t) = \frac{5\,V_1}{9} + a_1 e^{-94.3t} + a_2 e^{-764t}$$

$$B(t) = b_1 e^{-94.3t} + b_2 e^{-764t}$$

- Still has unknown constants

Transient Analysis

- Short-term response of a circuit to "change", typically a switching event:
  - An actual switch or sources turning on/off
  - Interest is after the switching event

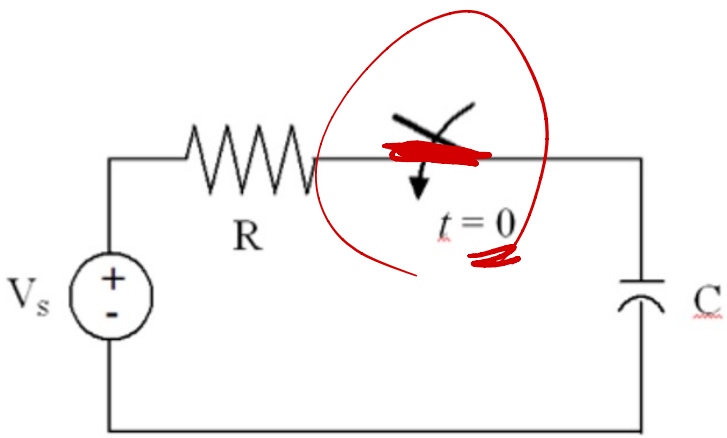

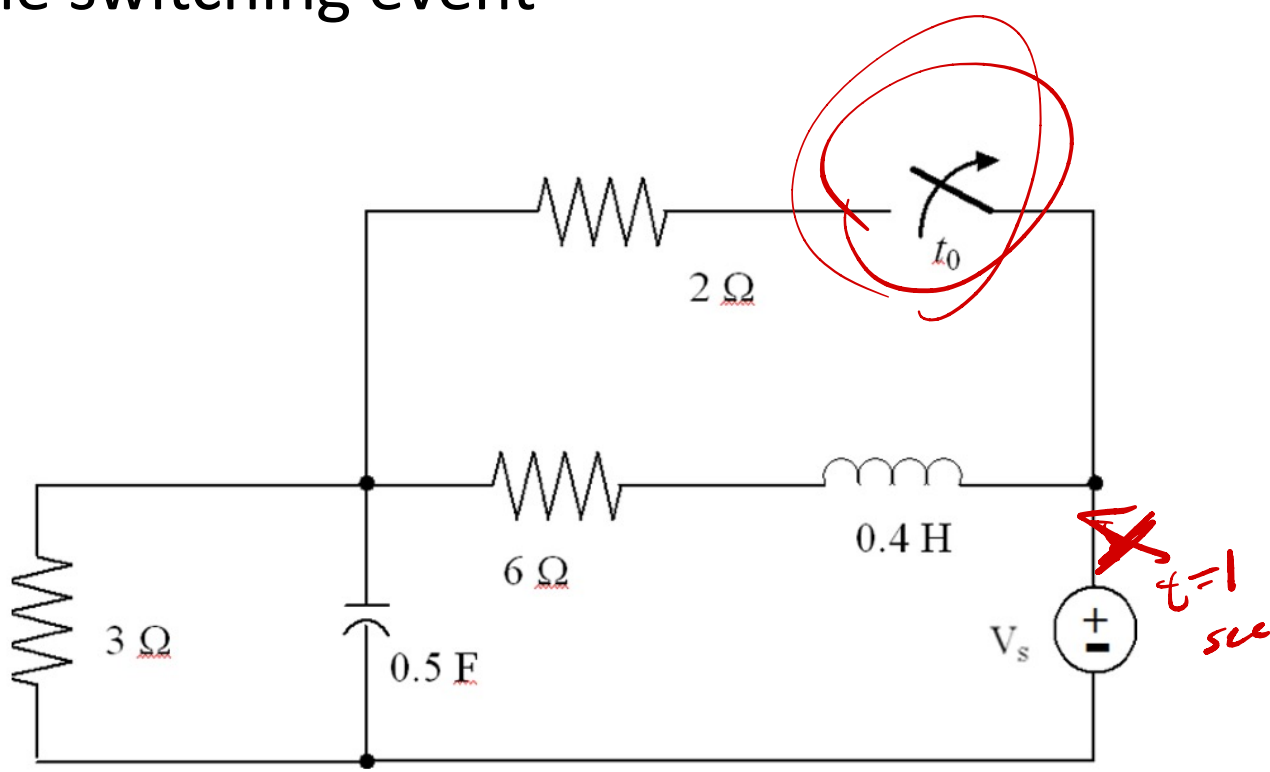

– We consider the DC source case so that the forced portion is a constant; specifically, in steady state, all voltages/currents are constants, so

$$v_L = L\frac{di_L(t)}{dt} = 0 \quad \rightarrow$$ inductors act as short circuits

$$i_C = C\frac{dv_C(t)}{dt} = 0 \quad \rightarrow$$ capacitors act as open circuits

As an example:

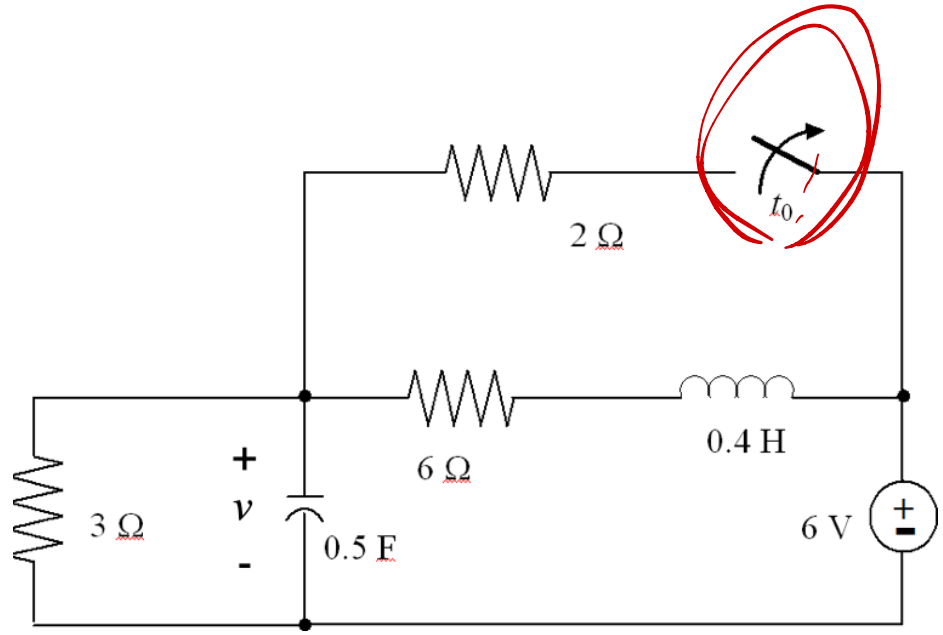

Before time t_0, assuming steady state:

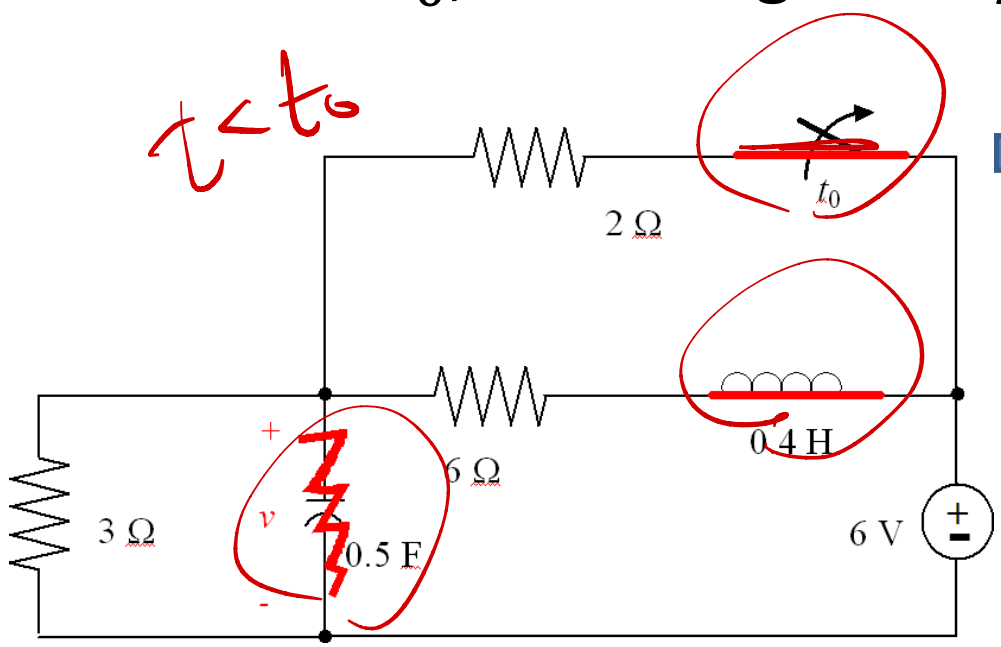

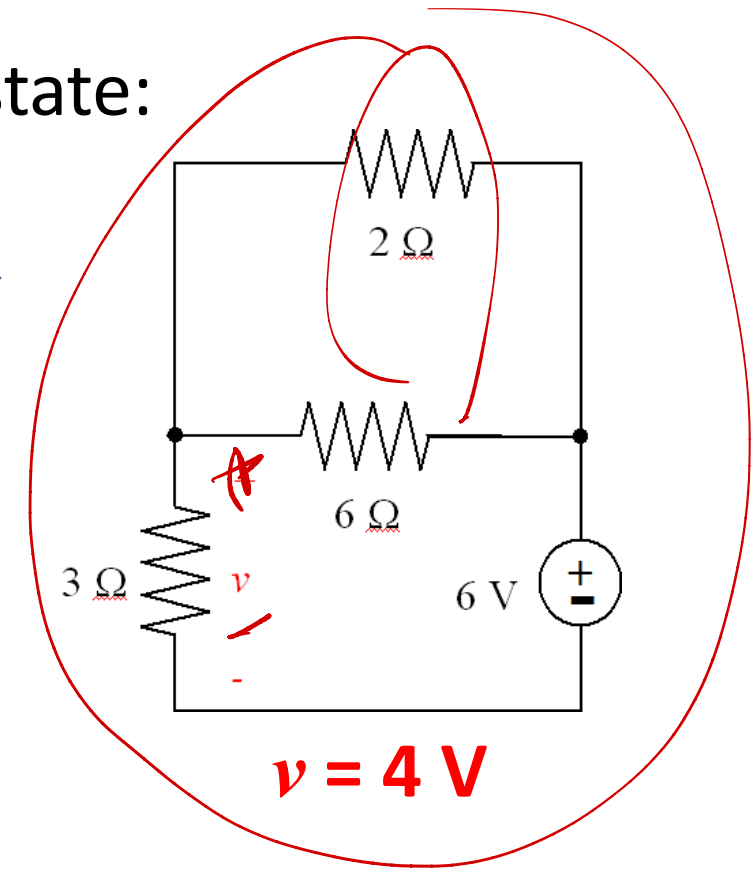

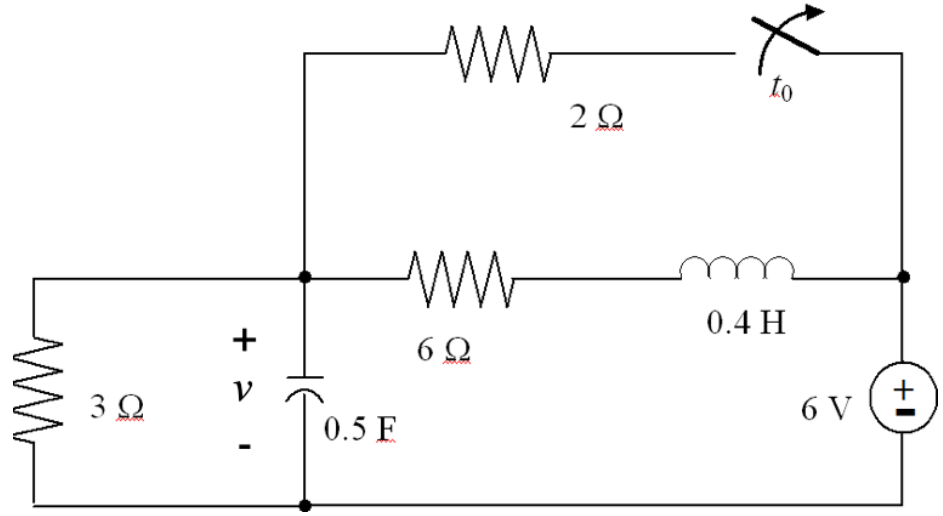

And a long time after time t_0, steady state again:

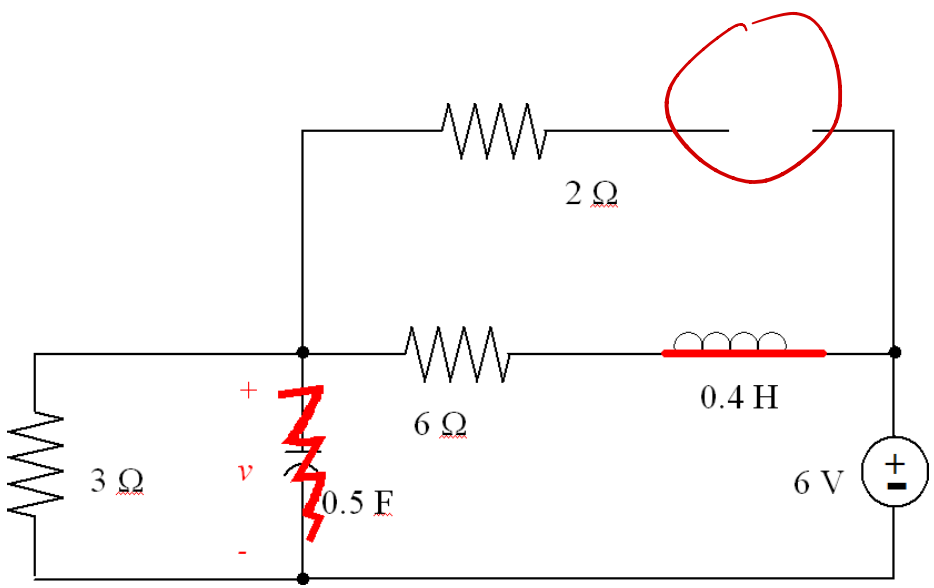

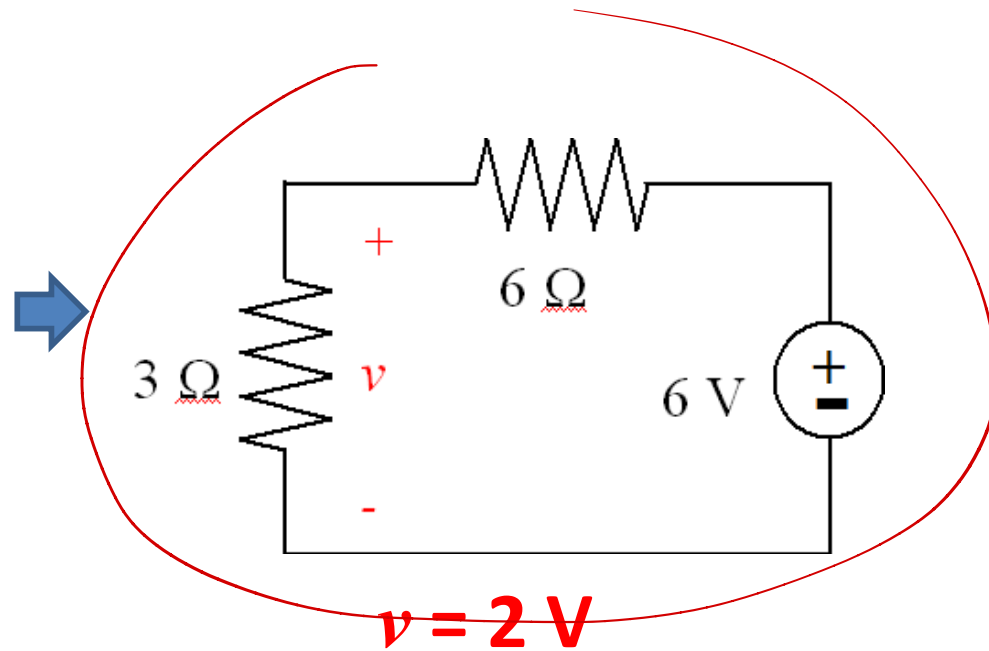

The transient is what happens in between these

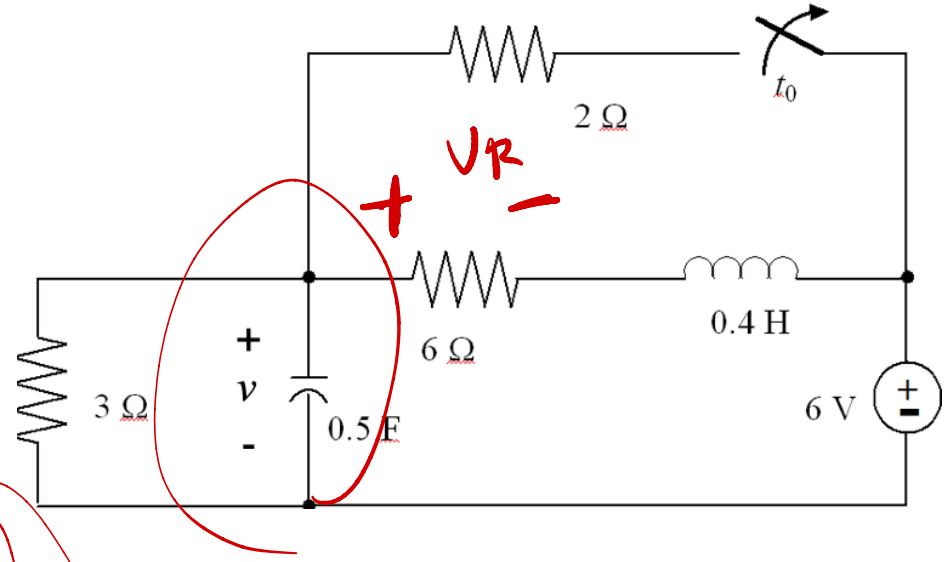

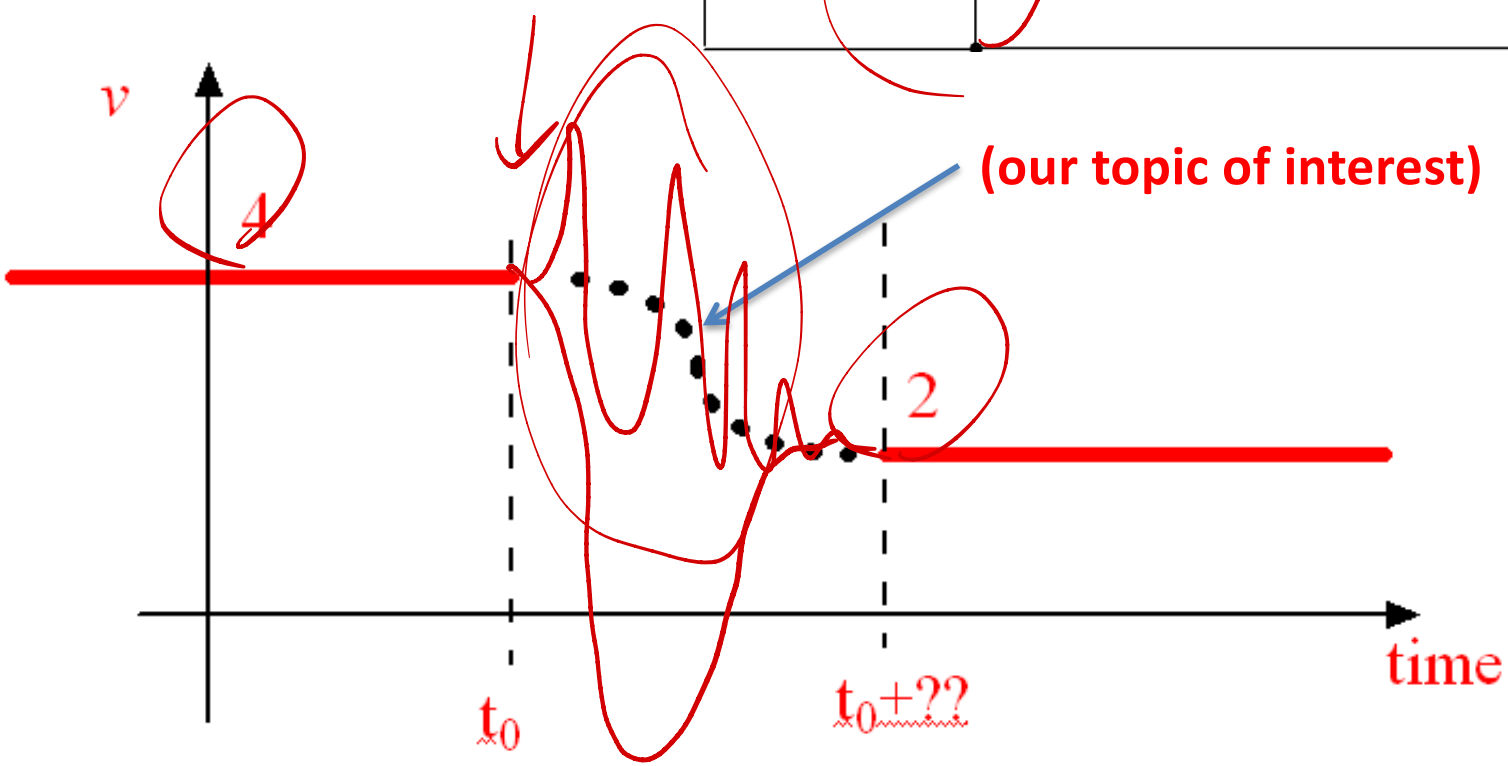

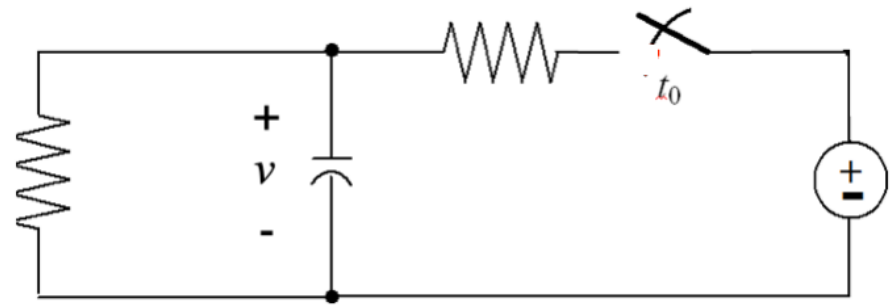

- Terminology used:
  - Natural response: circuit with no sources, initial conditions only; usually all variables go to zero
  - Step response: circuit with DC sources, zero initial conditions
  - Combined response = sum of both

- Useful facts:
  - Inductor: a short for DC; current cannot jump (is a continuous function)
  - Capacitor: an open for DC; voltage cannot jump (is a continuous function)

First Order RC Case

- Simple circuit
- DC source
- initial capacitor voltage is v_0

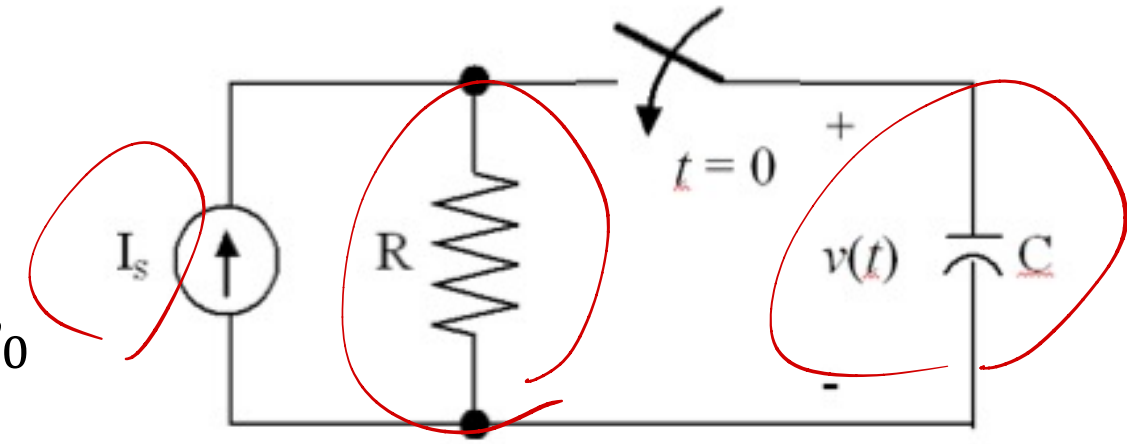

- Node equation after $t = 0$: $\frac{dv(t)}{dt} + \frac{1}{RC}v(t) = \frac{1}{C}I_s$
- Solution is: $v(t) = A\,e^{-\frac{1}{RC}t} + B$
- Need to solve for A and B

$$v(t) = A\, e^{-\,t/RC} + B$$

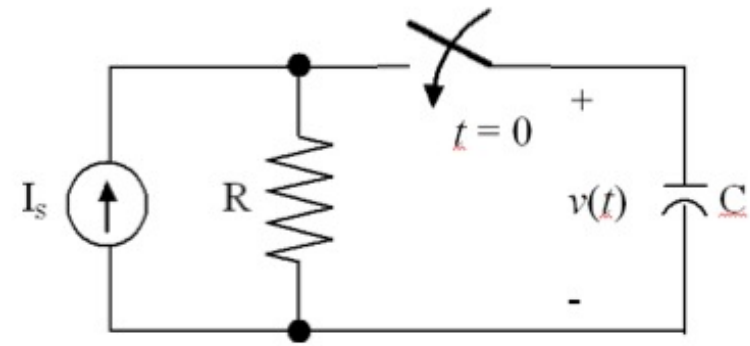

– Initial and final conditions: from the math

$$v(0) = A + B \qquad v(\infty) = B$$

– So, solving

$$v(t) = \big(v(0) - v(\infty)\big)e^{-\,t/RC} + v(\infty)$$

- Final value
  - Exploit the fact that in steady state the capacitor acts like an open

$$v(\infty) = I_s R$$

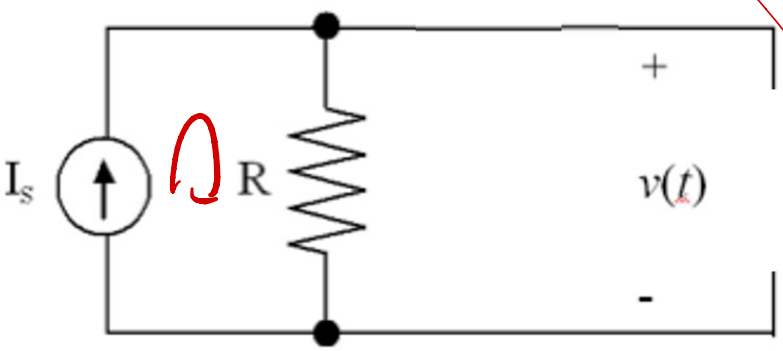

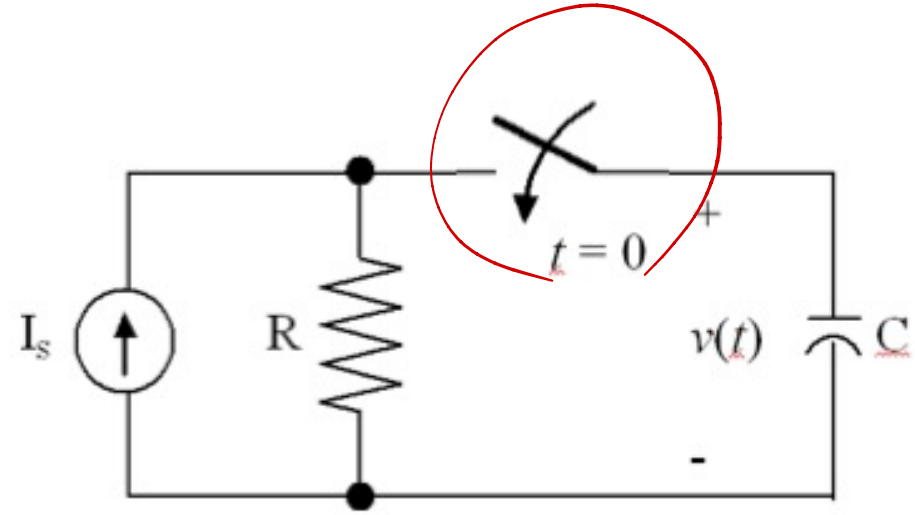

- Initial condition
  - Exploit the fact that the capacitor voltage cannot take a jump

$$v(0) = v_0$$

So

$$v(t) = (v_0 - I_s R)e^{-t/RC} + I_s R$$

$t \geq 0$

- Consider a transformation:

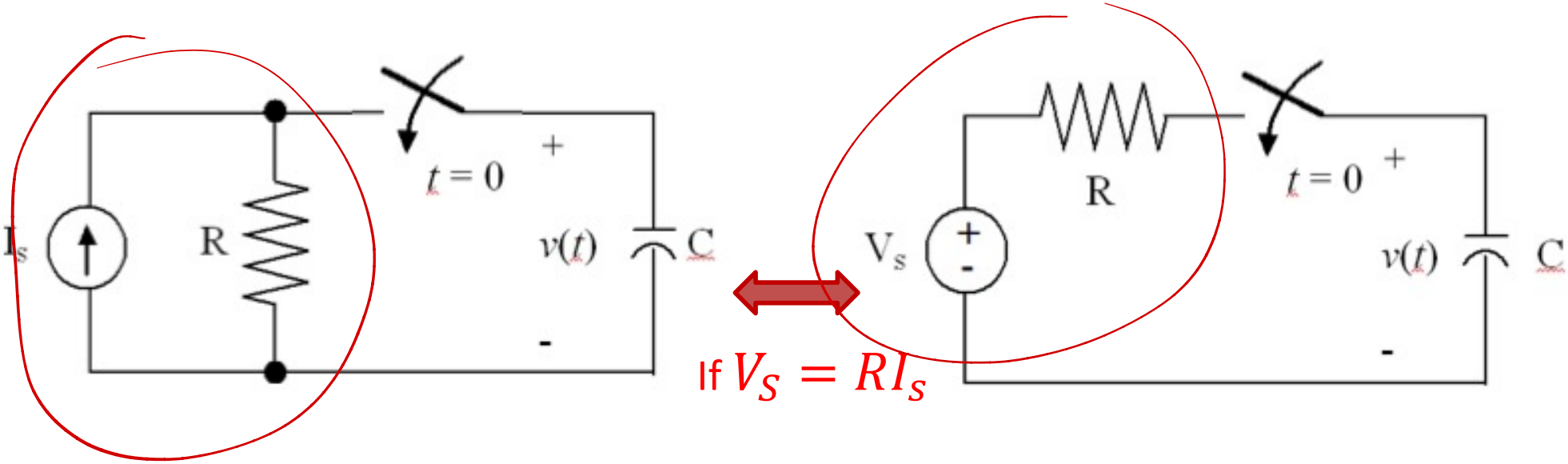

If $V_S = RI_s$

- With result

$$v(t) = (v_0 - I_s R)e^{-t/RC} + I_s R$$

$$= (v_0 - V_s)e^{-t/RC} + V_s$$