Lecture 29
Theorems – 6 of 6

max power with phasors

Maximum AC Power

- Given a phasor Thevenin model, how do we get maximum power to Z_L?

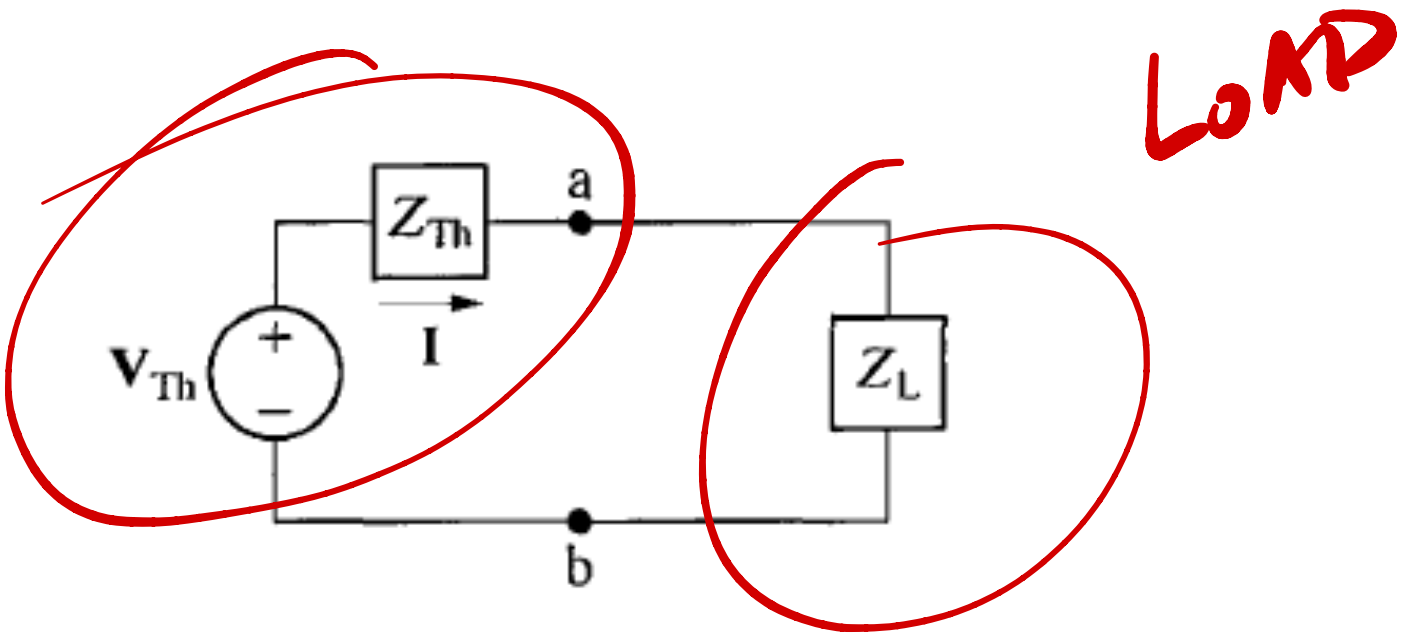

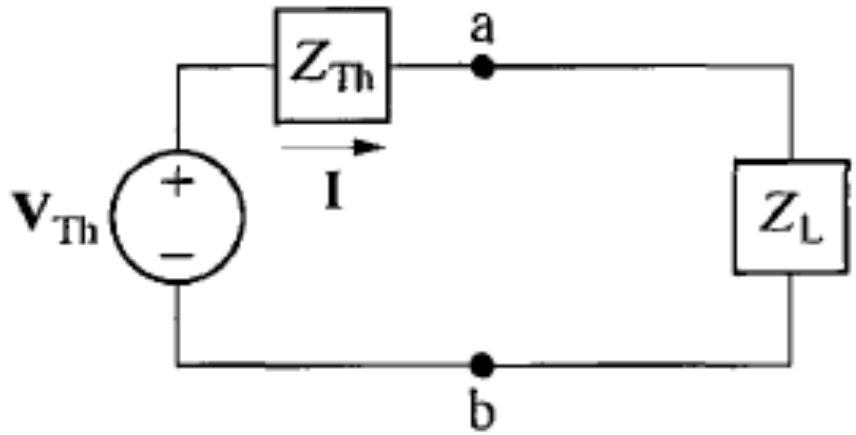

- As previously seen (lecture 21), for sinusoidal sources and RLC circuits, power is

Complex power $$S = \frac{|\mathbf{I}|^2}{2} Z_L$$

Real power $$P = \frac{|\mathbf{I}|^2}{2} R_L$$

$Z_{Th} = R_{Th} + jX_{Th}$

$Z_L = R_L + jX_L$

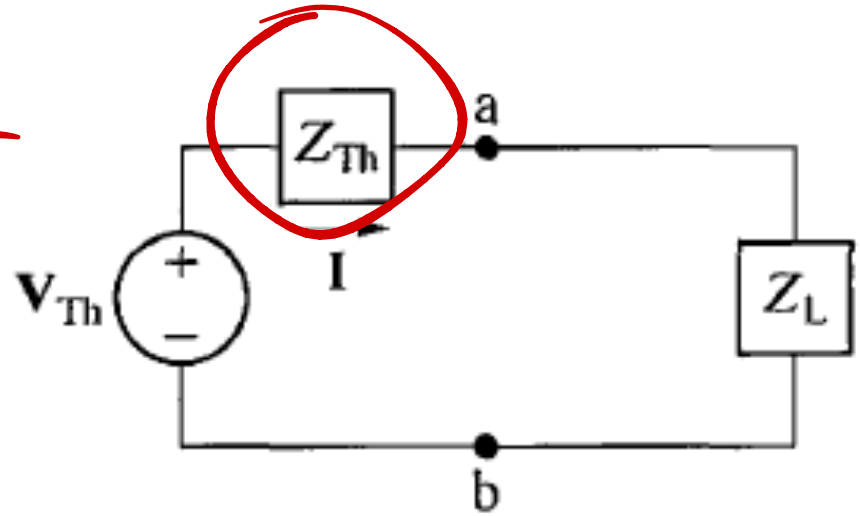

- For our problem

$$\mathbf{I} = \frac{\mathbf{V}_{Th}}{Z_{Th} + Z_L} = \frac{\mathbf{V}_{Th}}{(R_{Th} + R_L) + j(X_{Th} + X_L)}$$

- So

$$P = \frac{|\mathbf{I}|^2}{2} R_L = \frac{1}{2} \frac{|\mathbf{V}_{Th}|^2 R_L}{(R_{Th} + R_L)^2 + (X_{Th} + X_L)^2}$$

$$P = \frac{1}{2}\frac{|\mathbf{V}_{\mathrm{Th}}|^2 \mathrm{R}_{\mathrm{L}}}{(\mathrm{R}_{\mathrm{Th}} + \mathrm{R}_{\mathrm{L}})^2 + (\mathrm{X}_{\mathrm{Th}} + \mathrm{X}_{\mathrm{L}})^2}$$

- We can optimize this using calculus
- How depends upon which parameters we can change

$$P = \frac{1}{2}\frac{|\mathbf{V}_{\mathrm{Th}}|^2 \mathrm{R_L}}{(\mathrm{R_{Th}} + \mathrm{R_L})^2 + (\mathrm{X_{Th}} + \mathrm{X_L})^2}$$

- Case 1 (unusual): both R_L and X_L are free to choose

$$\frac{\partial P}{\partial X_L} = 0 \qquad \frac{\partial P}{\partial R_L} = 0$$

$$Z_L = Z_{\mathrm{Th}}{}^*$$

$$P_{max} = \frac{|\mathbf{V}_{\mathrm{Th}}|^2}{8R_{Th}}$$

$$P = \frac{1}{2}\frac{|\mathbf{V}_{\mathrm{Th}}|^2 \mathrm{R_L}}{(\mathrm{R_{Th}} + \mathrm{R_L})^2 + (\mathrm{X_{Th}} + \mathrm{X_L})^2}$$

- Case 2: X_L is fixed, but R_L is free to choose

$$\frac{\partial P}{\partial R_L} = 0$$

$$\mathrm{R_L} = \sqrt{\mathrm{R_{Th}}^2 + (\mathrm{X_{Th}} + \mathrm{X_L})^2}$$

$$P_{max} = \cdots$$

$$P = \frac{1}{2}\frac{|\mathbf{V}_{\mathrm{Th}}|^2 \mathrm{R_L}}{(\mathrm{R_{Th}} + \mathrm{R_L})^2 + (\mathrm{X_{Th}} + \mathrm{X_L})^2}$$

- Case 3: R_L is fixed, but X_L is free to choose

$$\frac{\partial P}{\partial X_L} = 0$$

$$\mathrm{X_L} = -\mathrm{X_{Th}}$$

$$P_{max} = \ldots$$

$$P = \frac{1}{2}\frac{|\mathbf{V}_{\mathrm{Th}}|^2 \mathrm{R_L}}{(\mathrm{R_{Th}} + \mathrm{R_L})^2 + (\mathrm{X_{Th}} + \mathrm{X_L})^2}$$

- Case 4: X_L is 0, but R_L is free to choose

$$\frac{\partial P}{\partial R_L} = 0$$

$$\mathrm{R_L} = \sqrt{\mathrm{R_{Th}}^2 + \mathrm{X_{Th}}^2}$$

$$P_{max} = \cdots$$

$$P = \frac{1}{2}\frac{|\mathbf{V}_{\mathrm{Th}}|^2 \mathrm{R}_{\mathrm{L}}}{(\mathrm{R}_{\mathrm{Th}} + \mathrm{R}_{\mathrm{L}})^2 + (\mathrm{X}_{\mathrm{Th}} + \mathrm{X}_{\mathrm{L}})^2}$$

- Other scenarios:
  - Fixed angle on Z_L
  - Limits on R_{L} and X_{L}

Example: find Z_L to maximize the power transfer

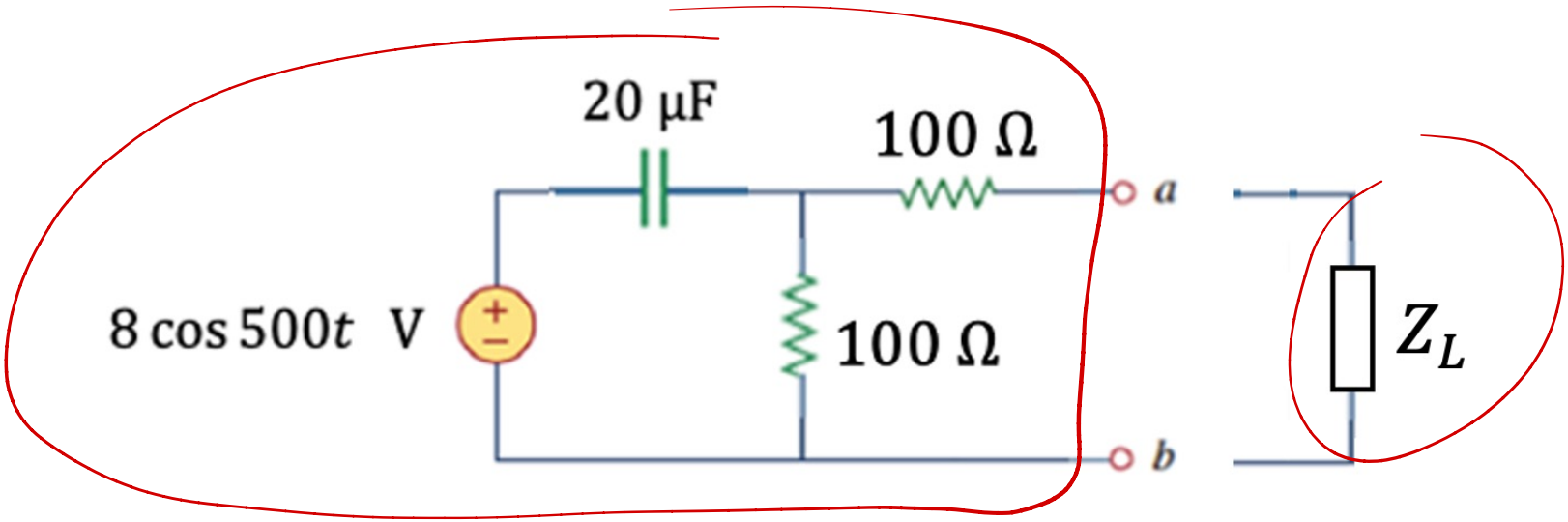

If Z_L is free to choose or must be resistive only

$Z_L = Z_{th}^*$

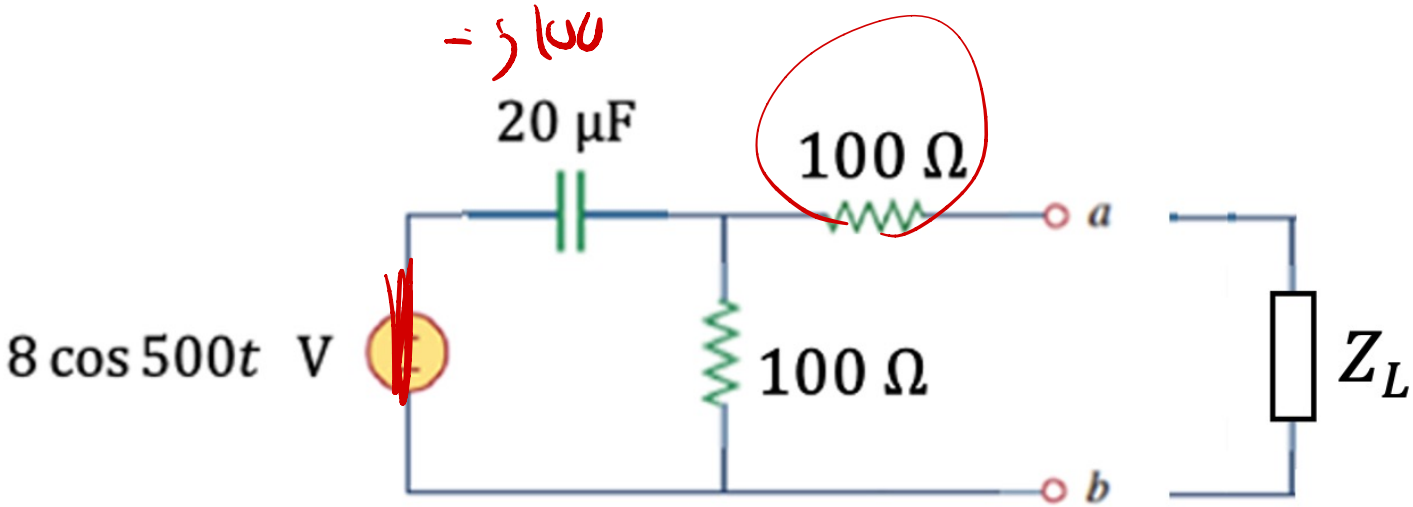

$$Z_{TH} = 100 + 20\mu F \parallel 100\Omega$$

$$\frac{(-j100)(100)}{100 - j100}$$

$V_{Th} = 4\sqrt{2}\cos(500t + 45°)\ V$ and $Z_{Th} = 150 - j50\ \Omega$,

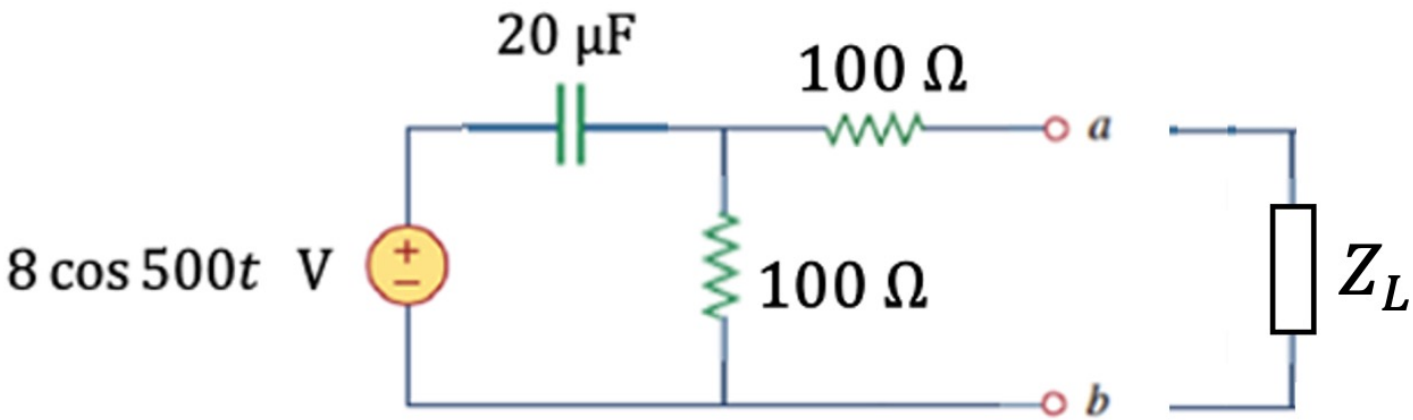

- If $Z_L = R_L + jX_L$

$Z_L = 150 + j50\ \Omega = 150\ \Omega, 0.1\ H$, and $P = 26.7\ mW$

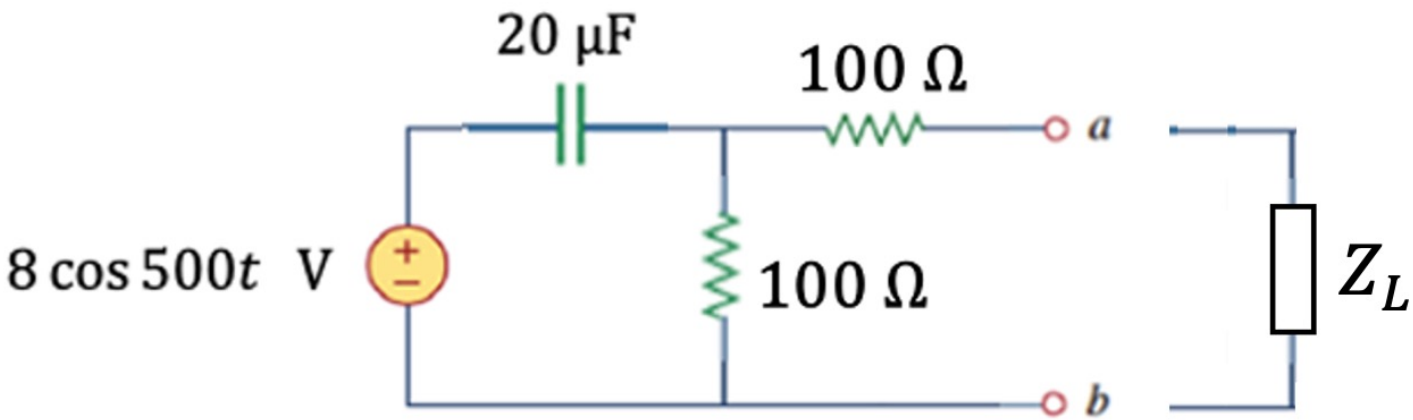

- If $Z_L = R_L$

$R_L = \sqrt{150^2 + 50^2}$

$P = \frac{I^2 R}{2}$

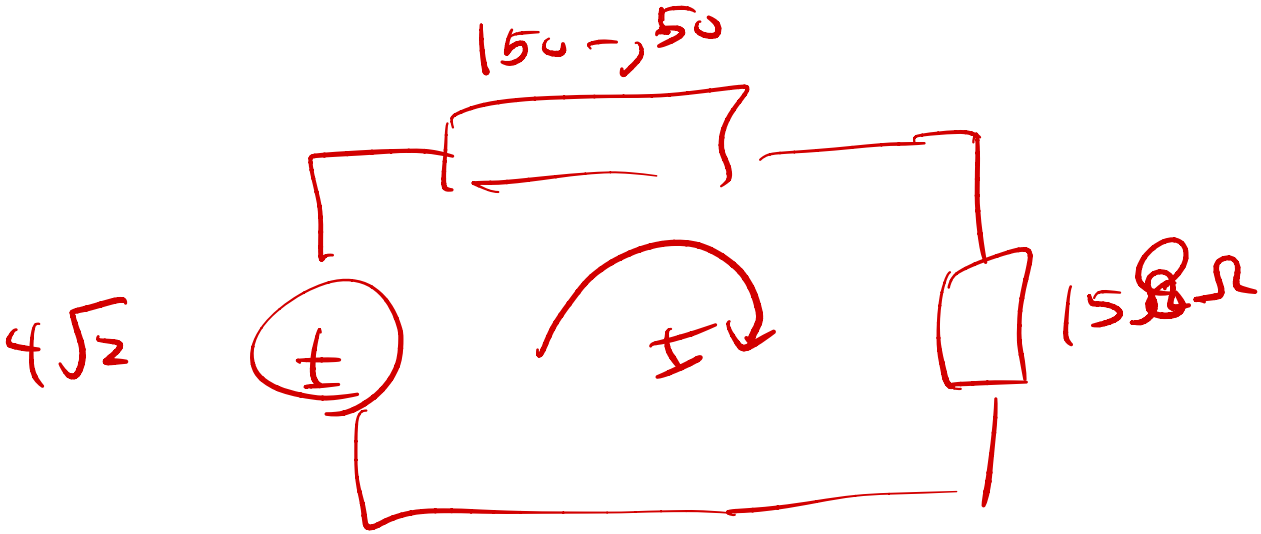

$\frac{4\sqrt{2}}{150 - j50 + 158}$

$Z_L = 158\ \Omega$ and $P = 26.0\ mW$