Lecture 34
1st Order Transients – 5 of 5

more complex examples

Example: What percentage of the initial energy stored in the capacitor (at time 0) is dissipated in the 4 kΩ resistor by time 250 μsec?

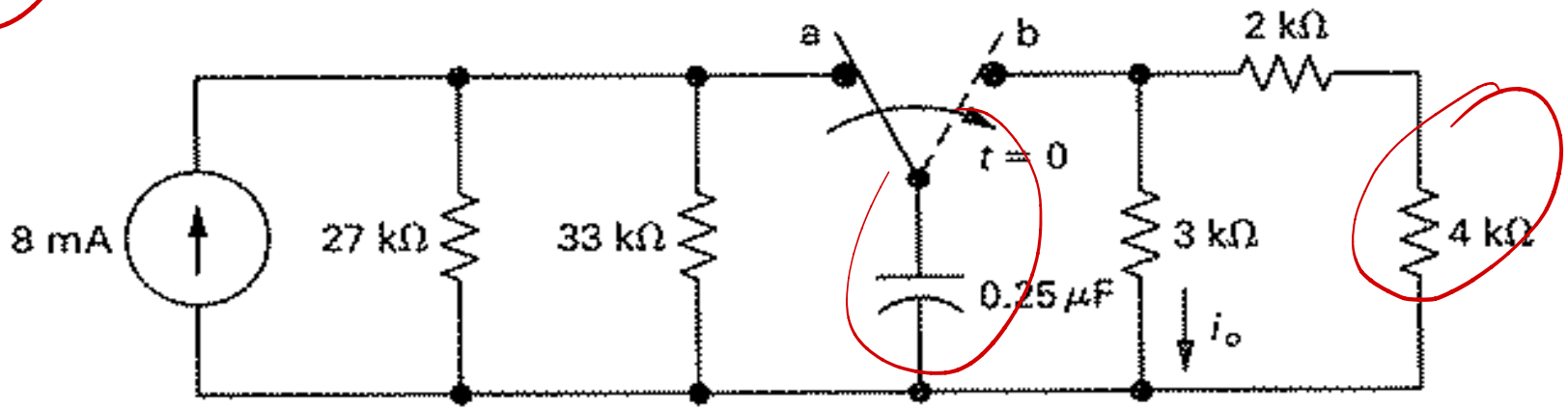

$$x(t) = x_\infty + (x_0 - x_\infty)\, e^{-t/\tau}$$

1 - find $v_c(t)$ cap voltage

$v_c(\infty) = 0$ $\quad R_{TH} = 2K$ $\quad \tau = RC = \frac{1}{200}$

$v_c(0) = 118.8\ v$

36.8 %

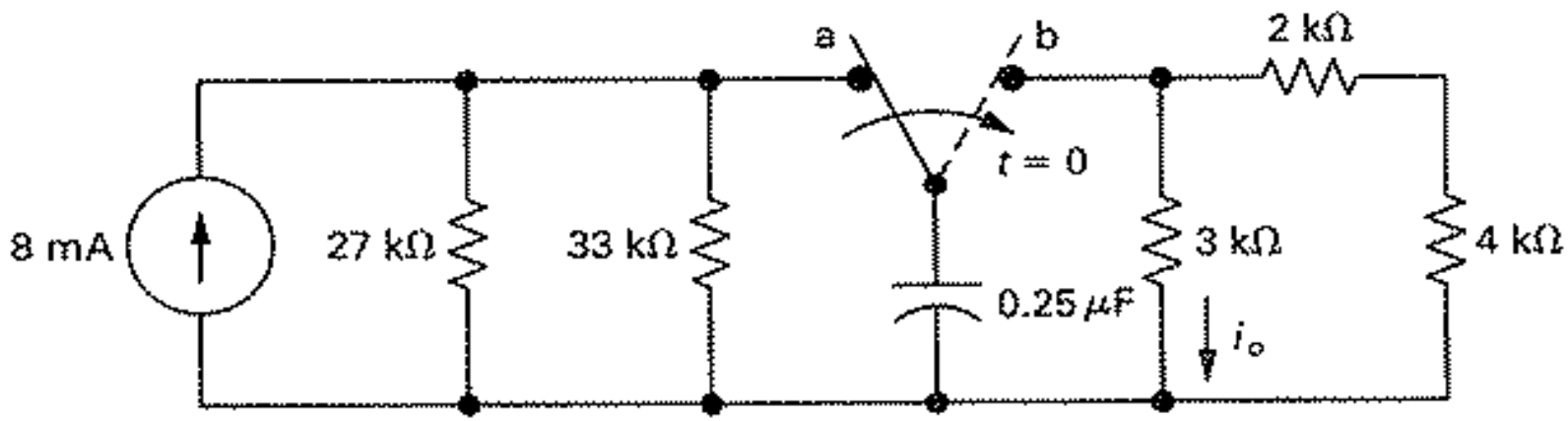

$$v_c(t) = \begin{cases} 118.8\, e^{-200t} \text{ volts} & t \geq 0 \\ 118.8 \text{ V} & t < 0 \end{cases}$$

$$E_c = C \cdot \frac{V^2}{2} = .25 \cdot 10^{-6} \cdot \frac{118.8^2}{2}$$

$$= \underline{2 \text{ mJ}}$$

36.8 %

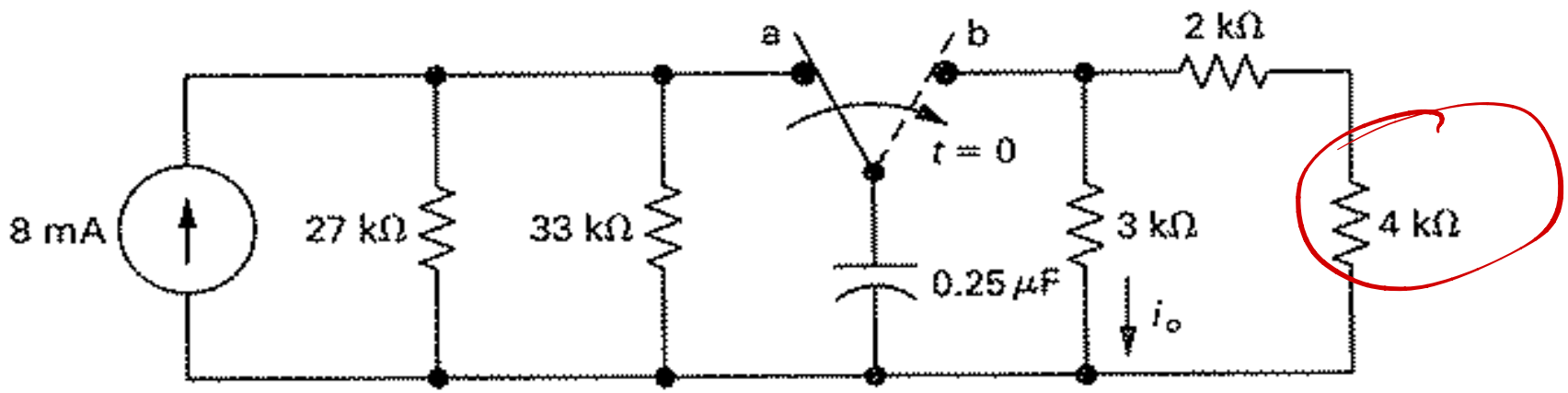

$$v_R(t) = \frac{2}{3} v_c(t) = 79.2\, e^{-200t} \text{ V.}$$

$$P_R(t) = \frac{v^2}{R} = \frac{(79.2)^2}{4000} e^{-400t}$$

$$E_R(t) = \int_0^t P_R(s)\, ds \approx \frac{3}{2} \int_0^t e^{-400s}\, ds$$

36.8 %

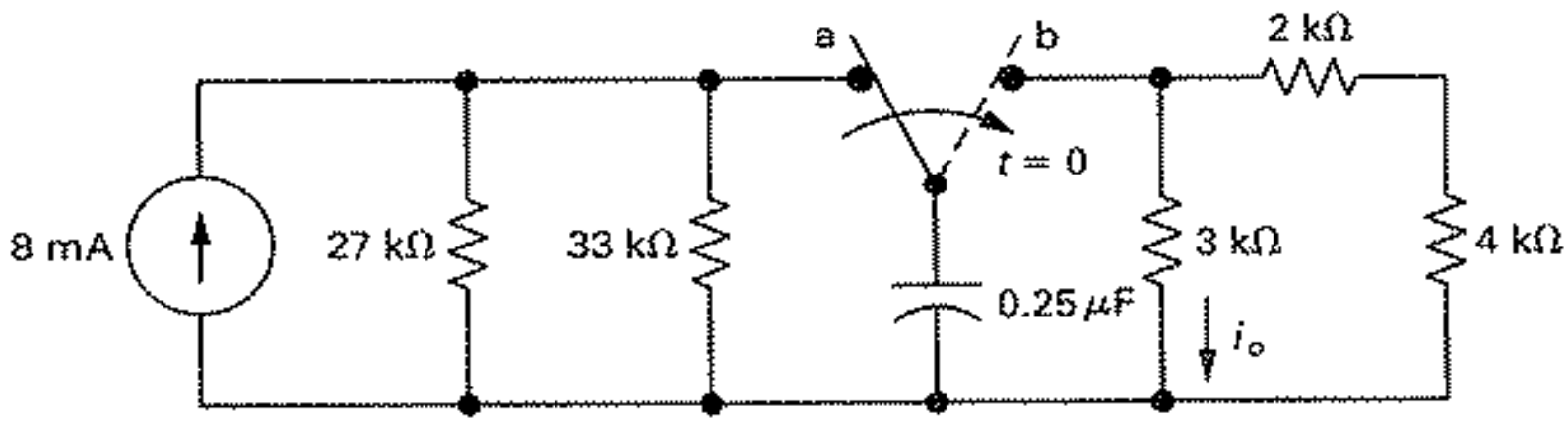

$$\frac{3}{2}\int_0^t e^{-400s}\,ds = \frac{3}{2}\left(-\frac{1}{400}e^{-400s}\right)\Big|_0^t$$

$$= \frac{3}{2}\left(\frac{1}{400} - \frac{e^{-400t}}{400}\right)$$

$$= \frac{3}{800}\left(1 - e^{-400t}\right)$$

36.8 %

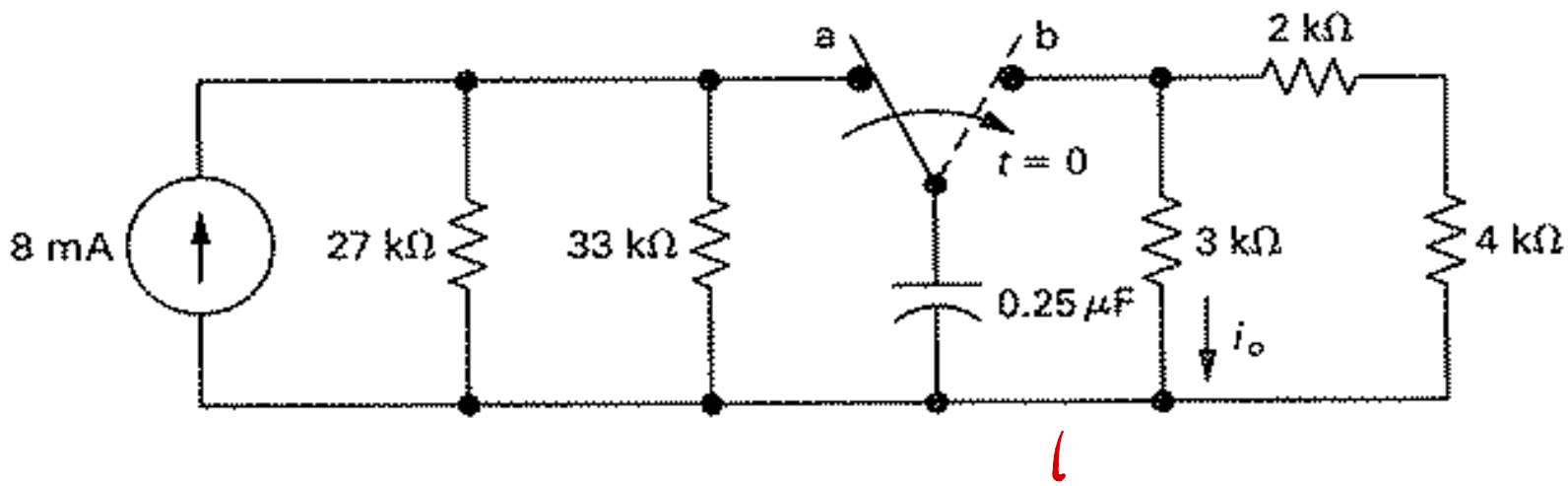

$$E(t) = \frac{3}{800}\left(1 - e^{-400t}\right)$$

$$E(250\,\mu s) \approx \frac{3}{800}\left(1 - e^{-400 \cdot 250 \cdot 10^{-6}}\right)$$

$$\frac{3}{800}\left(1 - e^{-.1}\right)$$

Example: find $i(t)$; this one is a bit tricky

$\tau = \frac{L}{R_{th}}$

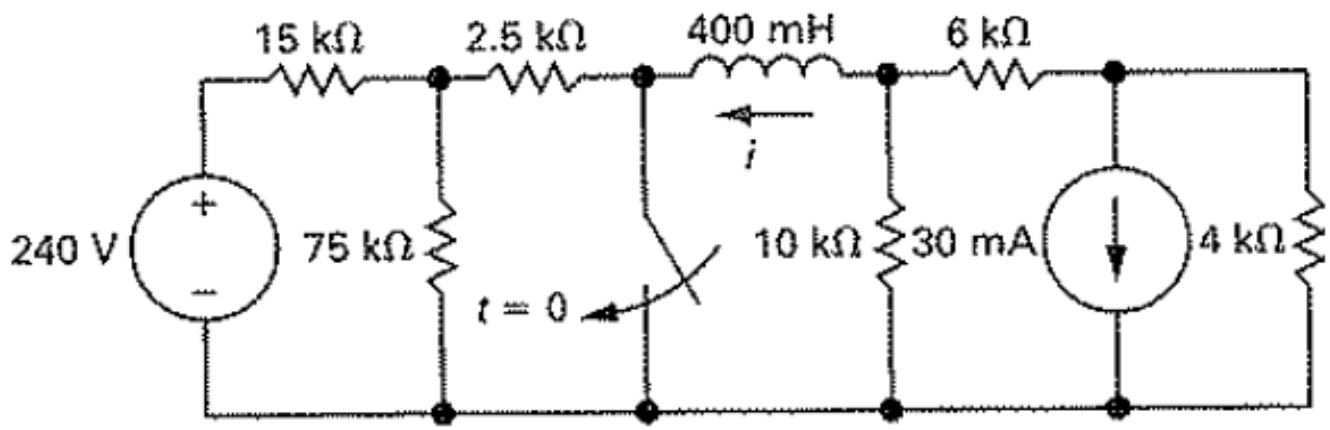

$i(t) = i_\infty + (i_0 - i_\infty)\, e^{-t/\tau}$

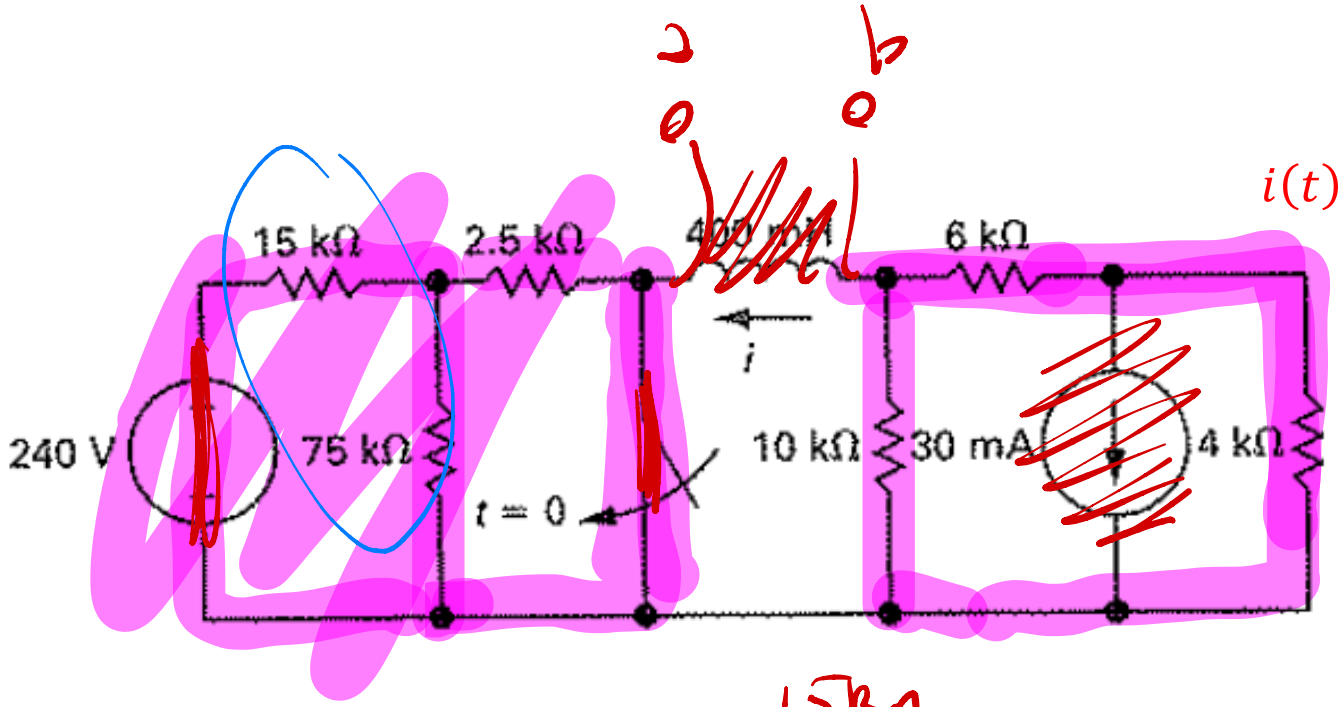

$$i(t) = -e^{12{,}5200t} - 12\ mA$$

$R_{th} = 5K$

R_{th}:

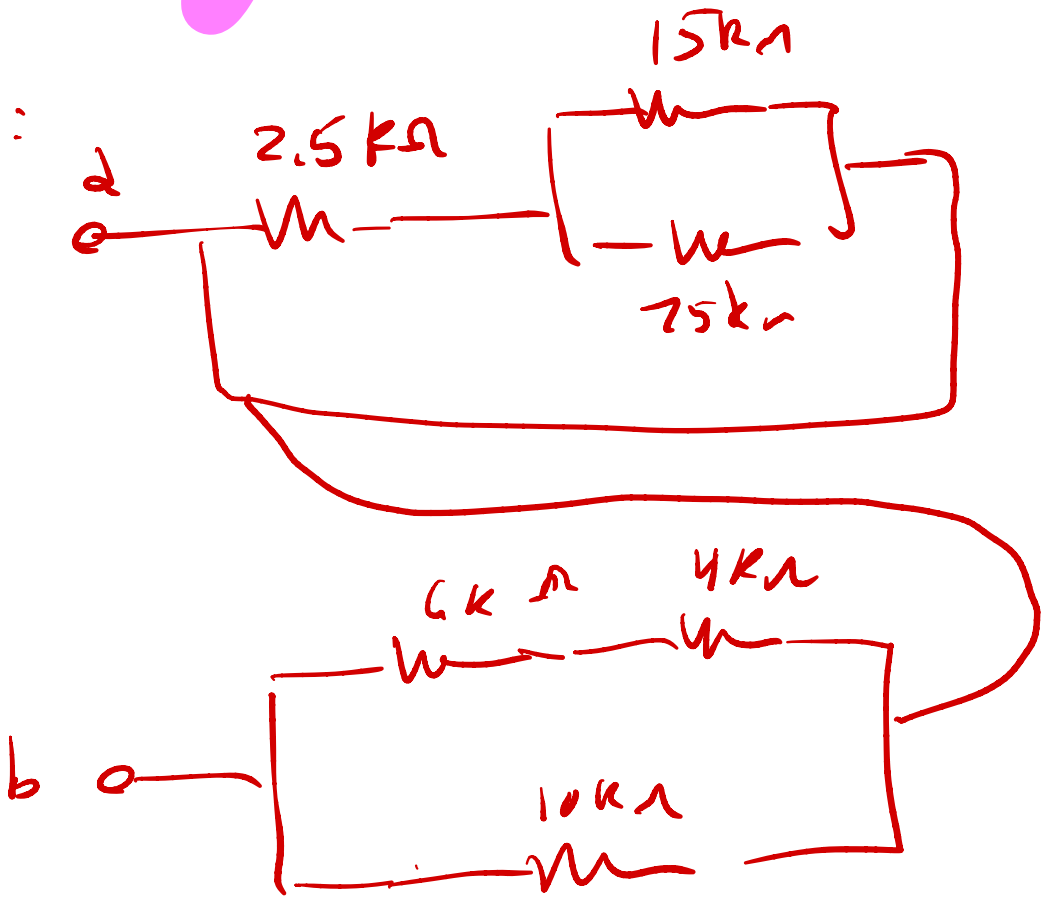

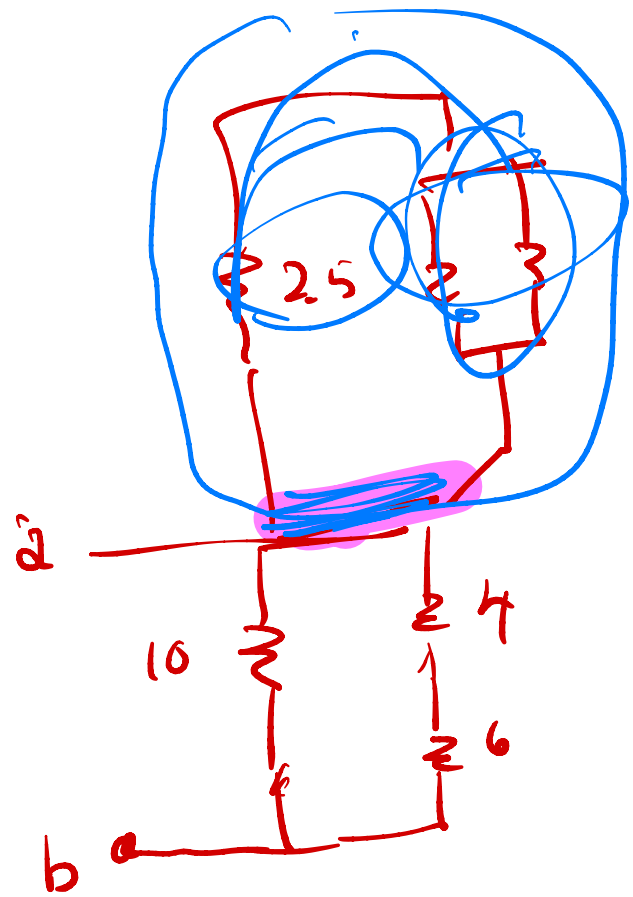

$$i(t) = -e^{12{,}5200t} - 12\ mA$$

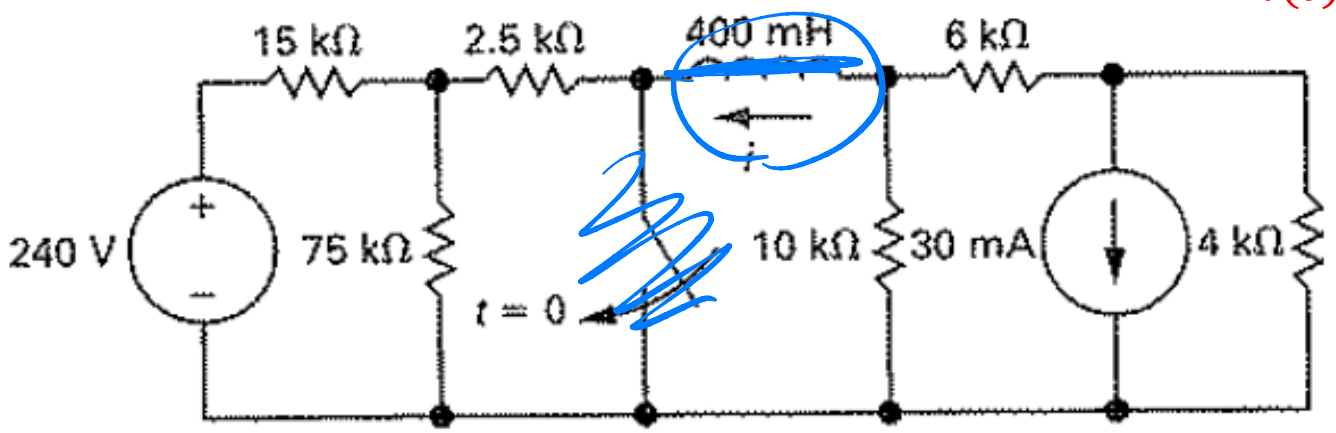

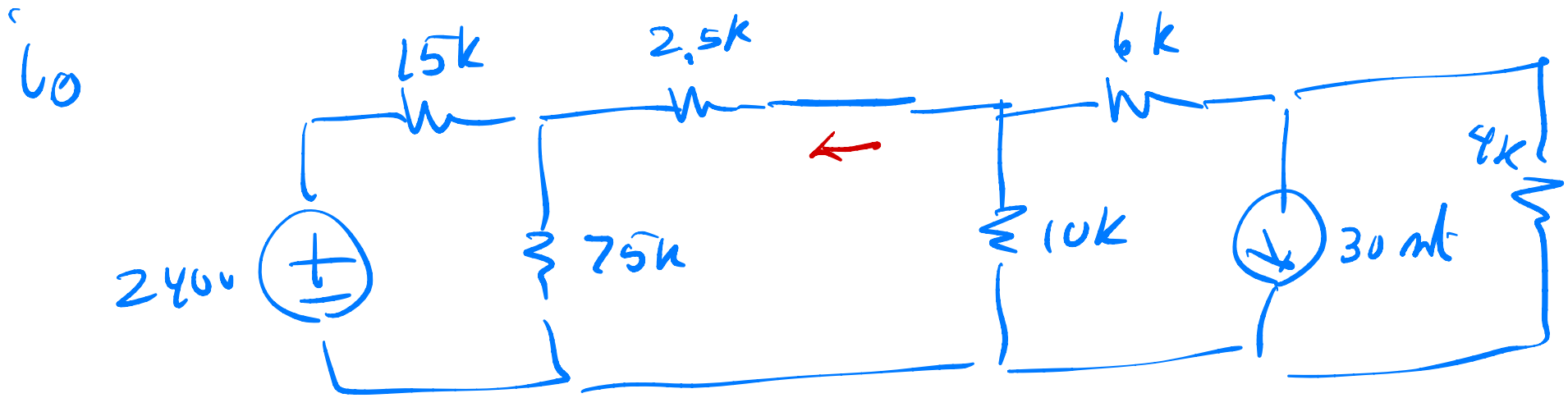

$$i_o = -13\ mA$$

$$i(t) = -e^{12{,}5200t} - 12\ mA$$

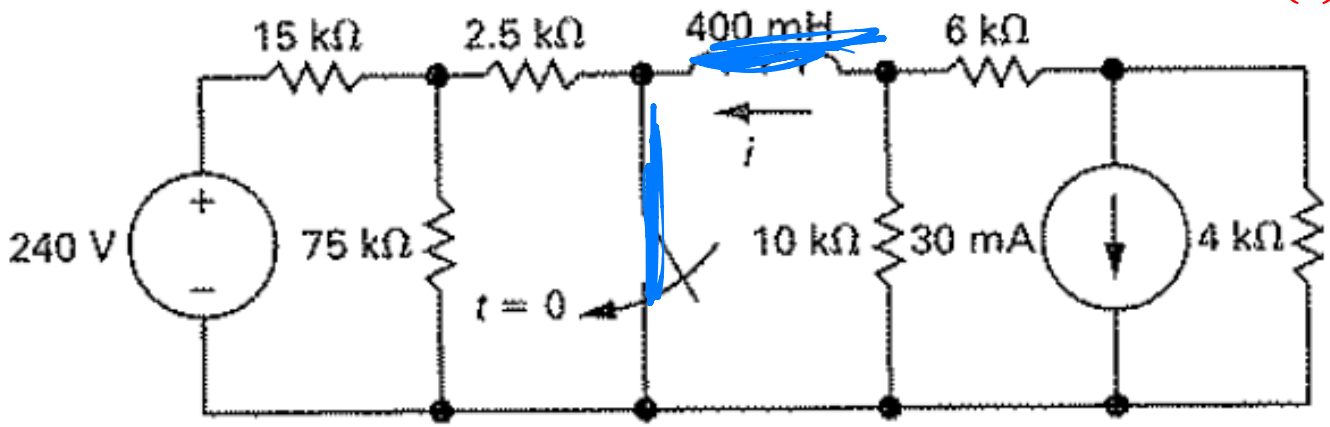

$i_\infty = -12\ mA$

Example: find $i_o(t)$

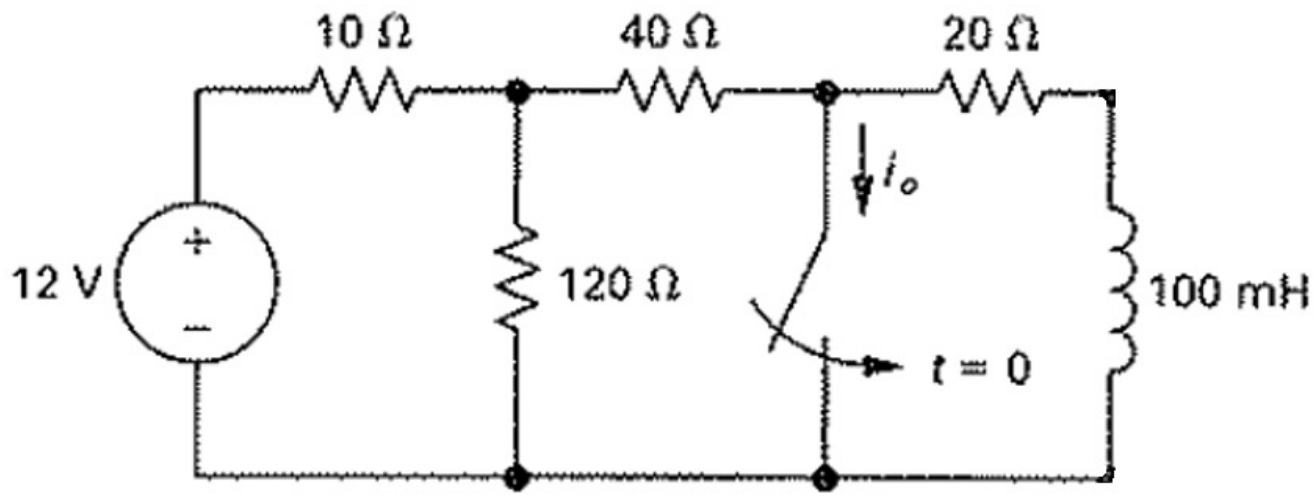

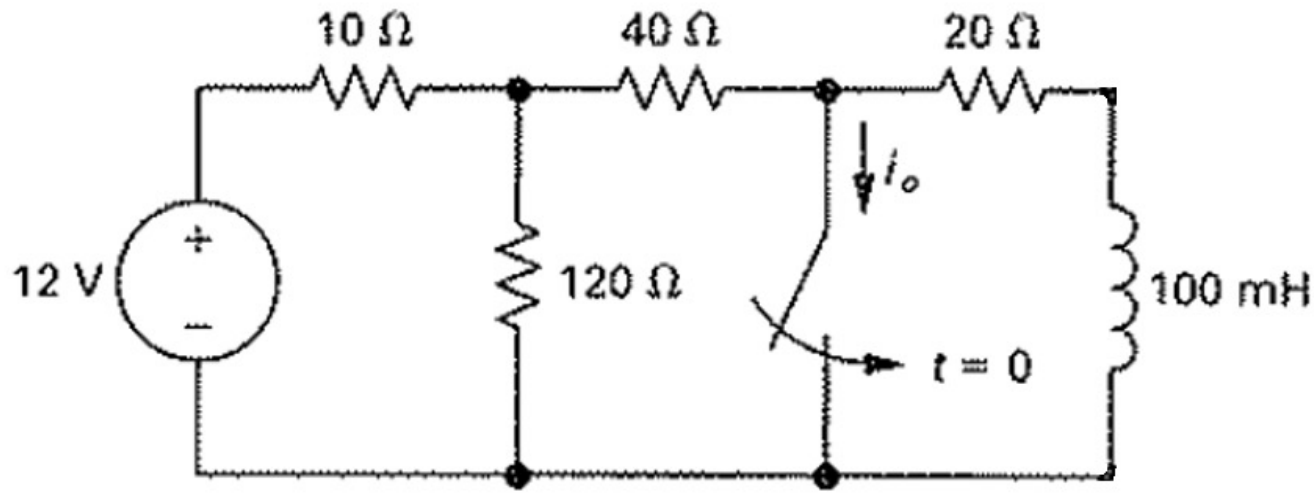

$$i_o(t) = -\frac{8}{50}e^{-200t} + \frac{9}{40}\text{ A}$$

Practice problem: find $i(t)$

$t < 0$: 0 A
$0 < t < 5$: $-e^{-3t} + 1$ A
$t > 5$: $-2e^{-2.25t} + 3$ A

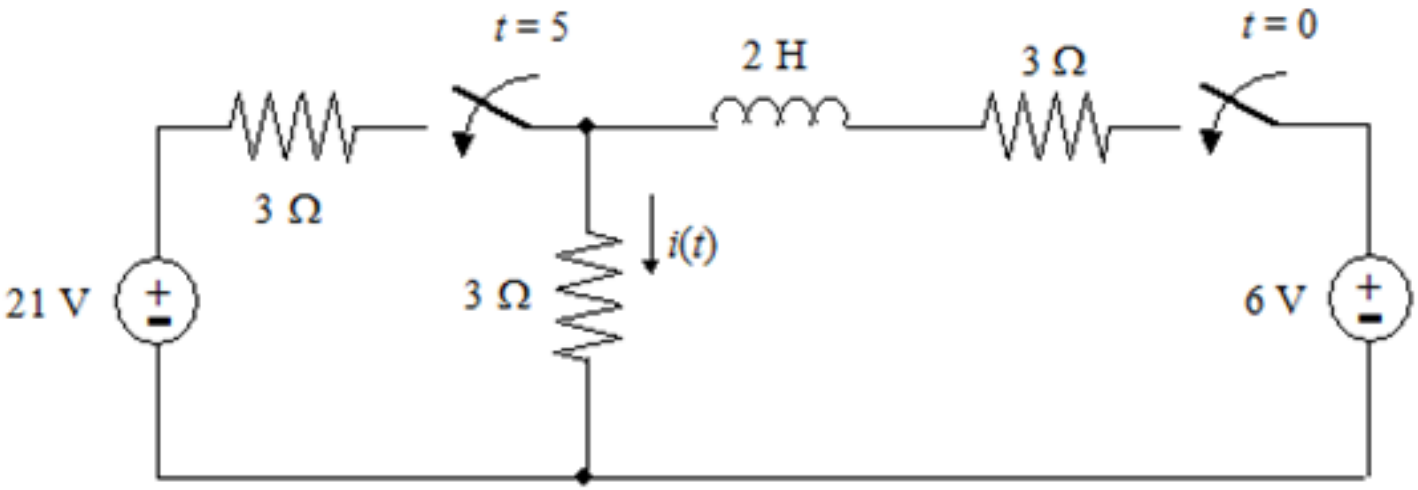

Practice problem: find $v_o(t)$, $t > 0$

$v_o\ (t) = -16e^{-4000t}\ V$

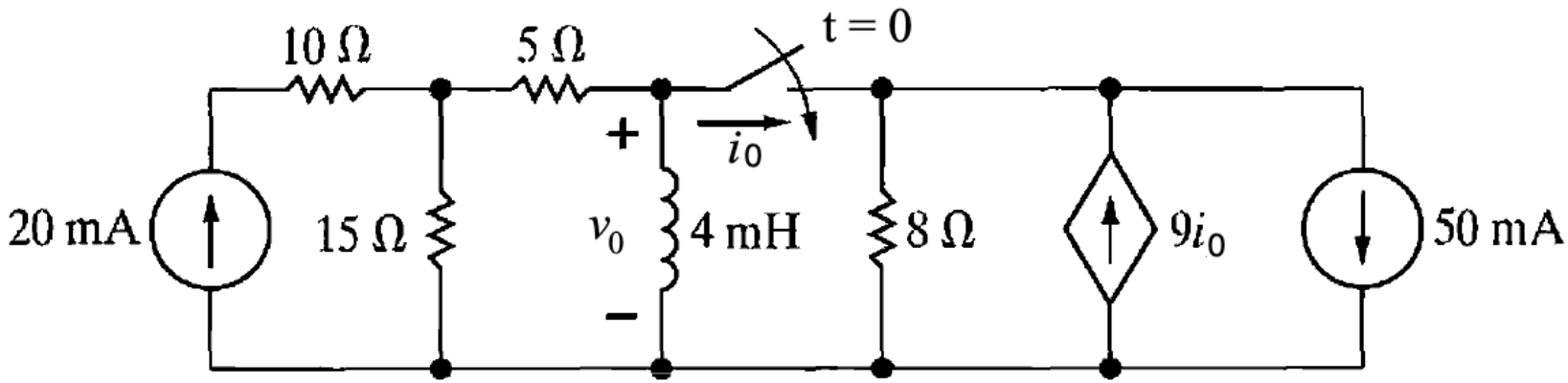

Practice problem: How much energy is stored in the capacitor at time t = 0? How much of this energy is dissipated by the 12 kΩ resistor by time t = 0.002 seconds? How long does it take to dissipate 95% of the energy?
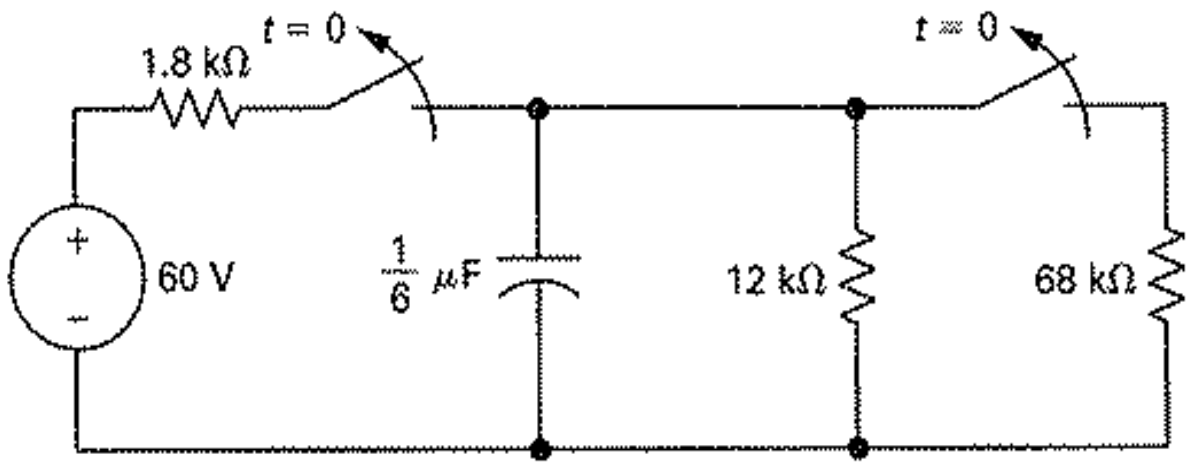
0.217 mJ
86.5 %
0.003 sec