Lecture 35
2nd Order Transients – 1 of 4

concepts

What happens with a second reactive component?

- Recall our prior example (during transients intro)

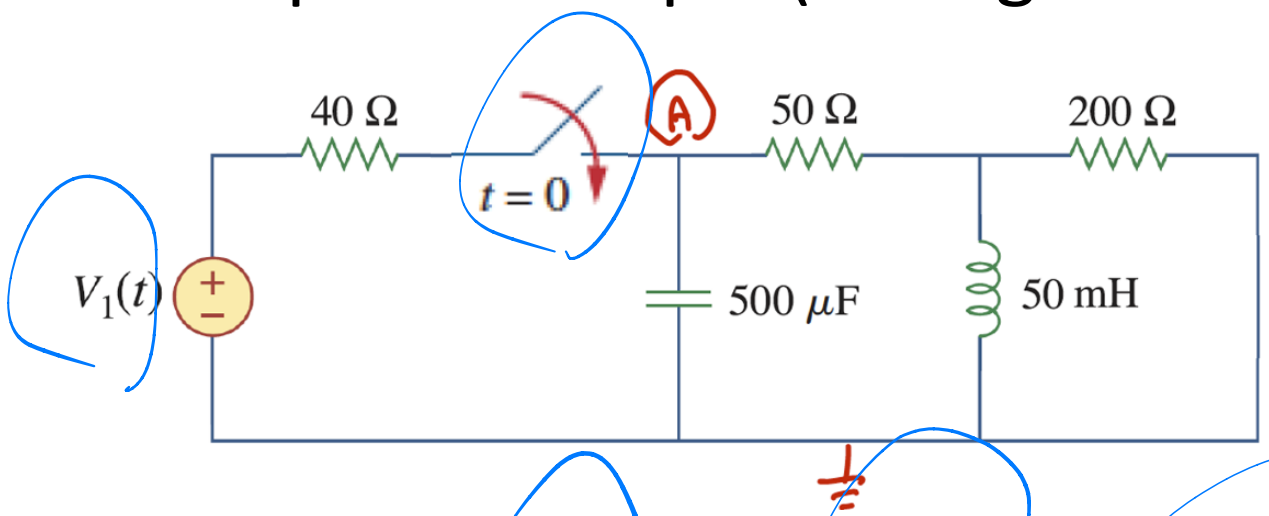

we found $A(t) = \frac{5}{9}V_1 + a_1 e^{-94.3t} + a_2 e^{-764t}$

Need to find a_1, a_2

And what if we decreased the capacitance?

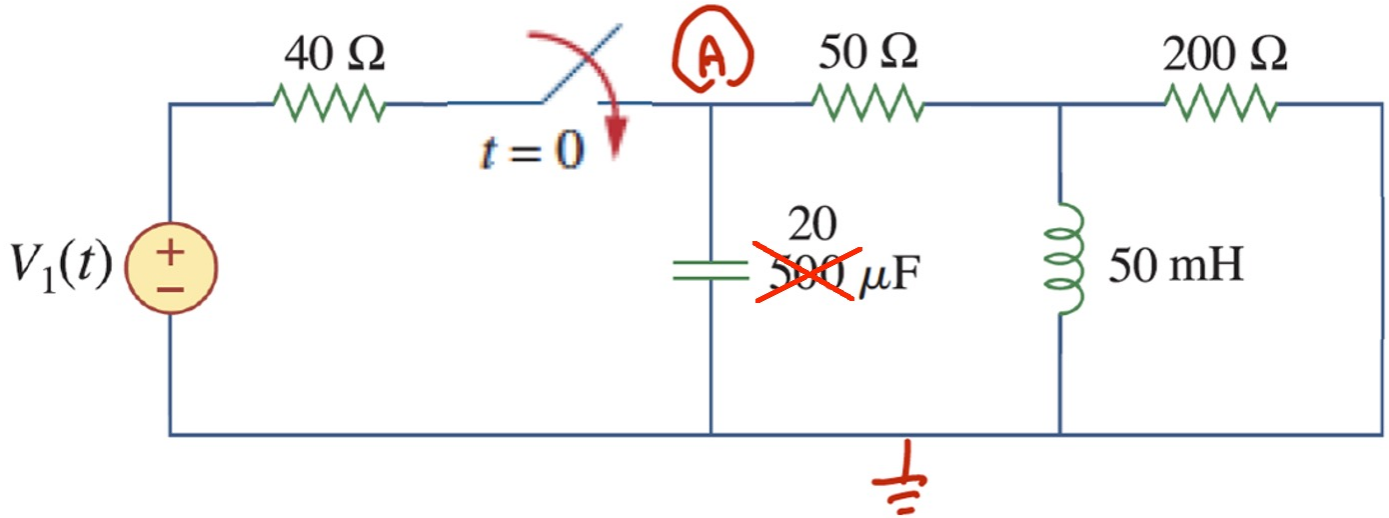

– Characteristic polynomial becomes

$$s^2 + \mathbf{2,250}\, s + \mathbf{1,800,000} = 0$$

$$s = -1{,}125 \pm j\,731$$

$$A(t) = \frac{5}{9}V_1 + a_1 e^{-1125t}\cos 731t + a_2 e^{-1125t}\sin 731t$$

Or added more reactive components circuit:

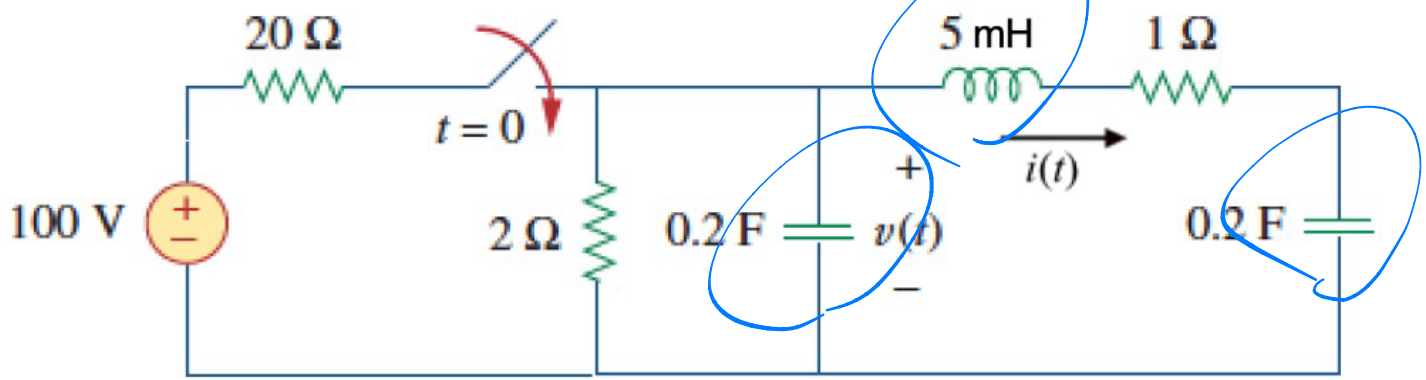

- Define node voltage $v(t)$ and branch current $i(t)$
- KCL on the top node; solve for $i(t)$
- KVL on the right branch
- Substitute in for $i(t)$ and its derivatives
- Normalize:

See website for the details

$$\frac{d^3v}{dt^3} + 202.75\frac{d^2v}{dt^2} + 2550\frac{dv}{dt} + 2750v + 250000 = 0$$

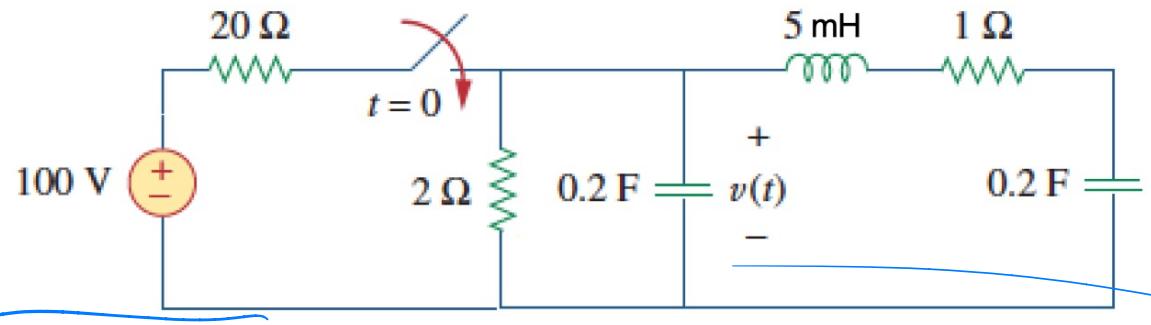

$$s^3 + 202.75\, s^2 + 2550\, s + 2750 = 0$$

$$v(t) = \frac{100}{11} + a_1 e^{-1.19t} + a_2 e^{-12.2t} + a_3 e^{-189t}$$

– If we increase L to 25 mH:

$$v(t) = \frac{100}{11} + a_1 e^{-1.19t} + a_2 e^{-20.8t} \cos 5.35t + a_3 e^{-20.8t} \sin 5.35t$$

The Takeaway

- Let n = count of distinct L's or C's (beyond trivial series or parallel combining)

- The differential equation/characteristic polynomial is n^{th} order and its coefficients depend upon the circuit topology and the component values

- There are n+1 terms in the solution, the steady state value and a term for each root of the characteristic polynomial, each with an unknown constant
  - Individual exponentials (real roots)
  - Pairs of exponentials with cosine or sine (complex)

- We use the n initial conditions on the inductor currents and capacitor voltages to solve for the n unknown coefficients

The Takeaway

- Let n = count of distinct L's or C's (beyond trivial series or parallel combining)

- The differential equation/characteristic polynomial is n^{th} order and its coefficients depend upon the circuit topology and the component values

- There are n+1 terms in the solution, the steady state value and a term for each root of the characteristic polynomial, each with an unknown constant
  - Individual exponentials (real roots)
  - Pairs of exponentials with cosine or sine (complex)

- We use the n initial conditions on the inductor currents and capacitor voltages to solve for the n unknown coefficients

The Takeaway

- Let n = count of distinct L's or C's (beyond trivial series or parallel combining)

- The differential equation/characteristic polynomial is n^{th} order and its coefficients depend upon the circuit topology and the component values

- There are n+1 terms in the solution, the steady state value (easy to find) and a term for each root of the characteristic polynomial, each with an unknown constant
  - Individual exponentials (real roots)
  - Pairs of exponentials with cosine or sine (complex)

- We use the n initial conditions on the inductor currents and capacitor voltages to solve for the n unknown coefficients

The Takeaway

- Let n = count of distinct L's or C's (beyond trivial series or parallel combining)

- The differential equation/characteristic polynomial is n^{th} order and its coefficients depend upon the circuit topology and the component values

- There are n+1 terms in the solution, the steady state value and a term for each root of the characteristic polynomial, each with an unknown constant
  - Individual exponentials (real roots)
  - Pairs of exponentials with cosine or sine (complex)

- We use the n initial conditions on the inductor currents and capacitor voltages to solve for the n unknown coefficients

Focus – 2 “simple” RLC circuits

Parallel:

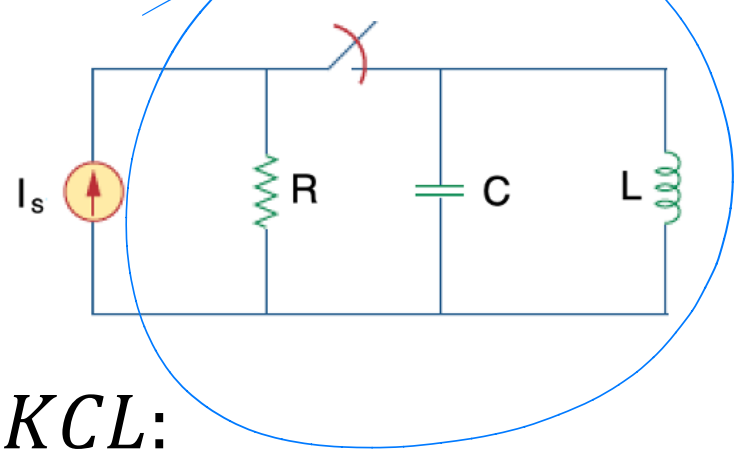

Series:

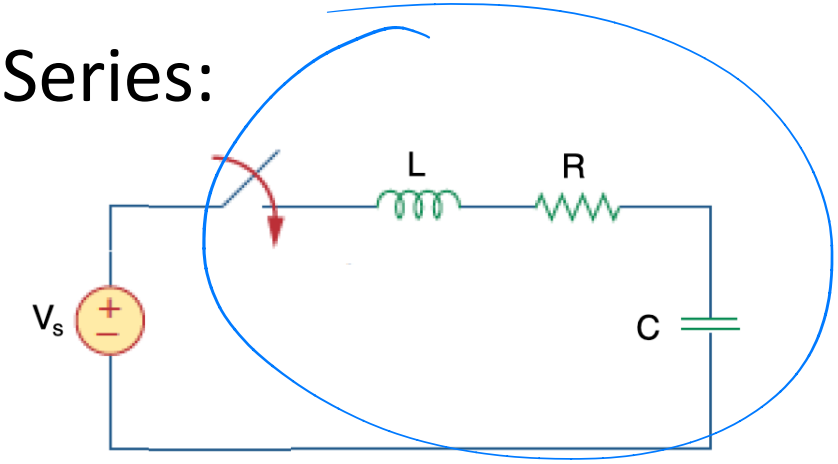

- KCL:

$$I_s + \frac{v}{R} + \frac{1}{L}\int^t v(s)ds + C\frac{dv}{dt} = 0$$

$$\frac{d^2v}{dt^2} + \frac{1}{RC}\frac{dv}{dt} + \frac{1}{LC}v = 0$$

- KVL:

$$-V_s + Ri + L\frac{di}{dt} + \frac{1}{C}\int^t i(s)ds = 0$$

$$\frac{d^2i}{dt^2} + \frac{R}{L}\frac{di}{dt} + \frac{1}{LC}i = 0$$

- Generally, $\frac{d^2x}{dt^2} + 2\alpha\frac{dx}{dt} + \omega_0^2 x = 0$

Standard notation

$$\alpha = \begin{cases} \dfrac{R}{2L} & ; \quad \text{series} \\ \dfrac{1}{2RC} & ; \quad \text{parallel} \end{cases}$$

$$\omega_0^2 = \frac{1}{LC}$$

- For $s^2 + 2\alpha\, s + \omega_0^2 = 0$ the homogeneous solution is

$$x(t) = \mathrm{A}e^{st}$$

with two values for s:

$$s = -\alpha \pm \sqrt{\alpha^2 - \omega_0^2} = -\alpha \pm \begin{cases} \omega_d & \textit{real roots} \\ j\omega_d & \textit{complex} \end{cases}$$

- Two negative real roots ($s_1 = -\alpha + \omega_d, \quad s_2 = -\alpha - \omega_d$): (over-damped)

$$x(t) = A_1 e^{s_1 t} + A_2 e^{s_2 t} + x_\infty$$

- Two equal roots (s): (critically damped)

$$x(t) = D_1 t\, e^{st} + D_2 e^{st} + x_\infty$$

- Complex conjugate roots ($-\alpha \pm j\omega_d$): (under-damped)

$$x(t) = B_1 e^{-\alpha t} \cos \omega_d t + B_2 e^{-\alpha t} \sin \omega_d t + x_\infty$$

The "time" constant

- 1st order solution

$$x(t) = A\, e^{-t/\tau} + x(\infty)$$

  – Transient gone in about 4τ

- 2nd order solution

$$x(t) = A_1 e^{s_1 t} + A_2 e^{s_2 t} + x(\infty)$$

$$x(t) = B_1 e^{-\alpha t} \cos \omega_d t + B_2 e^{-\alpha t} \sin \omega_d t + x(\infty)$$

  – duration depends upon s_1, s_2 or α

Example:

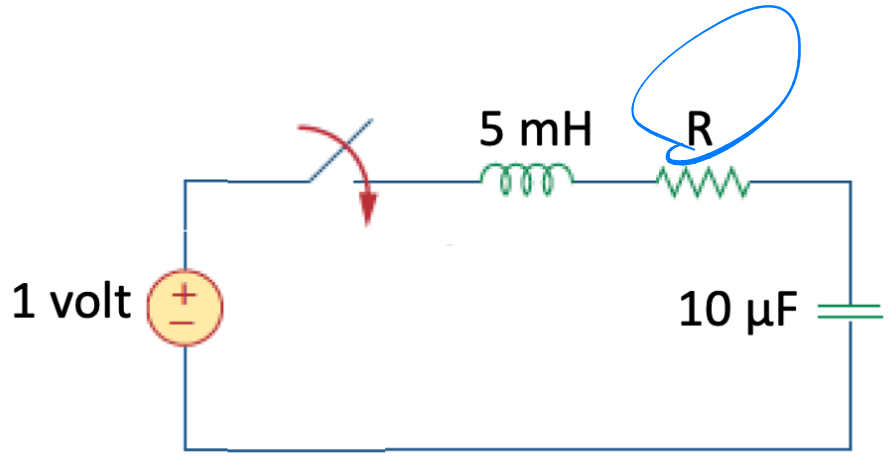

Find the form of the capacitor voltage $v(t)$ assuming R = 100 Ω

Since series, the characteristic equation is

$$s^2 + \frac{R}{L}s + \frac{1}{LC} = 0$$

or

$$s^2 + 20{,}000\, s + 2\times10^7 = 0$$

or

$$s = -18900, -1060$$

so

$$v(t) = A_1 e^{-18{,}900t} + A_2 e^{-1060t} + v_\infty$$

Determines speed

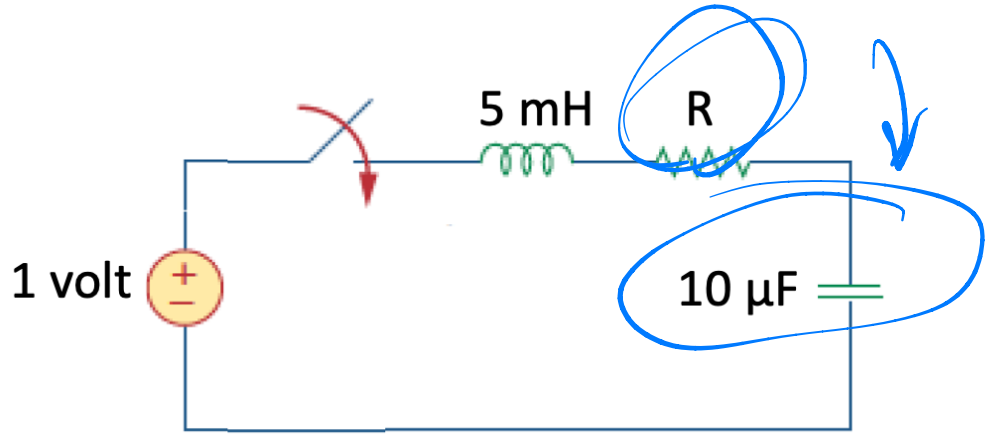

- What is R is reduced to 5 Ω ?

$$s^2 + 1000\,s + 2\times10^7 = 0$$

or

$$s = -500 \pm j\,4440$$

so

Determines speed

$$v(t) = B_1 e^{-500t}\cos 4440t + B_2 e^{-500t}\sin 4440t + v_\infty$$

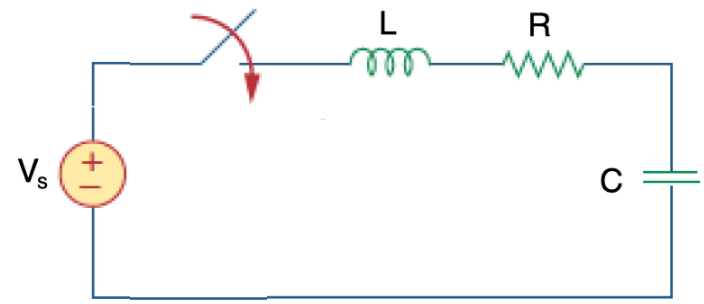

- Blue: R = 100 Ω, overdamped
- Red: R = *5* Ω, underdamped

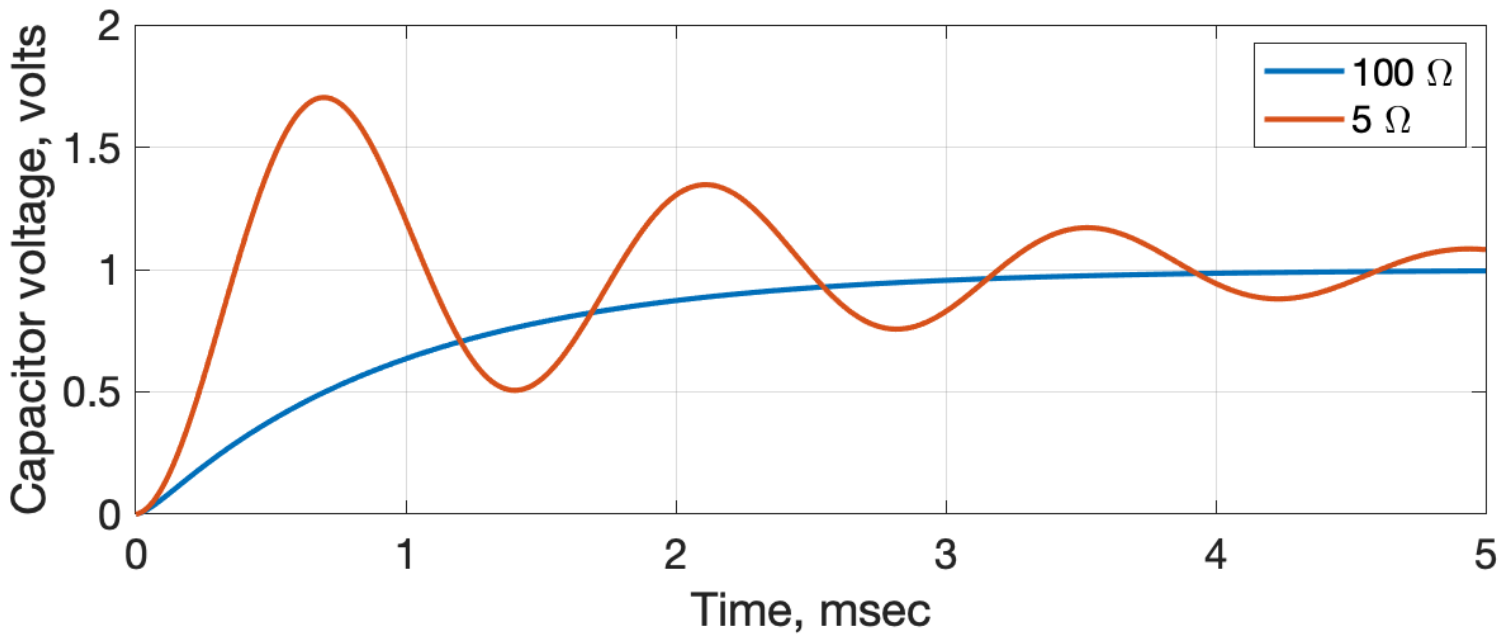

- Goals for the next few days – find the **details** of these solution, including evaluation of unknown constants

Practice problem: **a** <u>parallel</u> RLC circuit consists of a 5000 Ω resistor, a 1.25 H inductor, and an 8 nF capacitor.

- Find the roots of the characteristic equation
- Is the response over-damped or under-damped?
- How would you need to change the resistance to get the other form of damping?

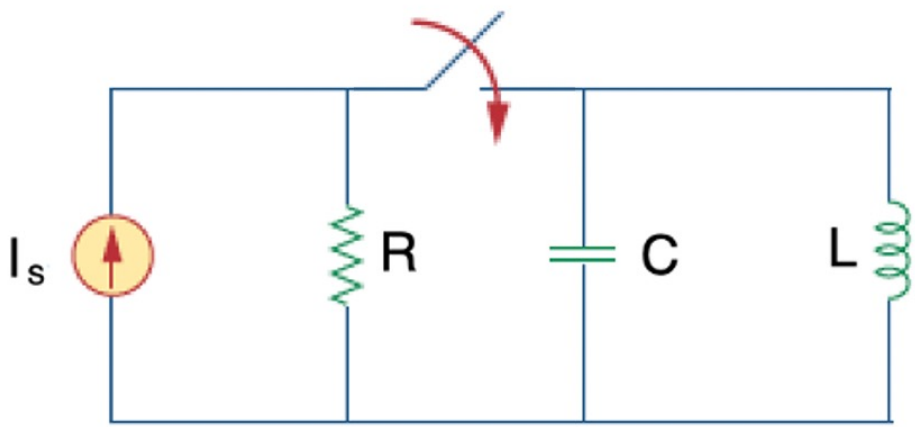

$-20{,}000, -50,$; over, $R > 6250\ \Omega$

Practice problem: a series RLC circuit consists of the same 5000 Ω resistor, 1.25 H inductor, and 8 nF capacitor.

- Find the roots of the characteristic equation
- Is the response over-damped or under-damped?
- How would you need to change the resistance to get the other form of damping?

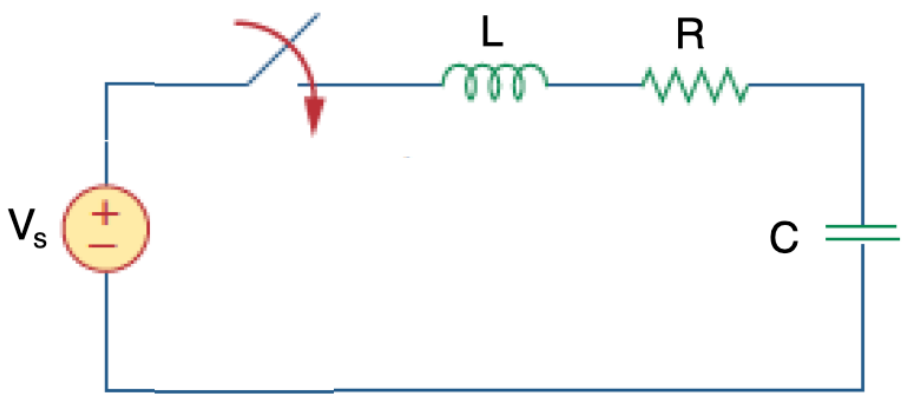

$-2000 \pm j\,9798$; under, $R > 25{,}000\ \Omega$