The Last Lecture
Mesh Analysis

How to find v?

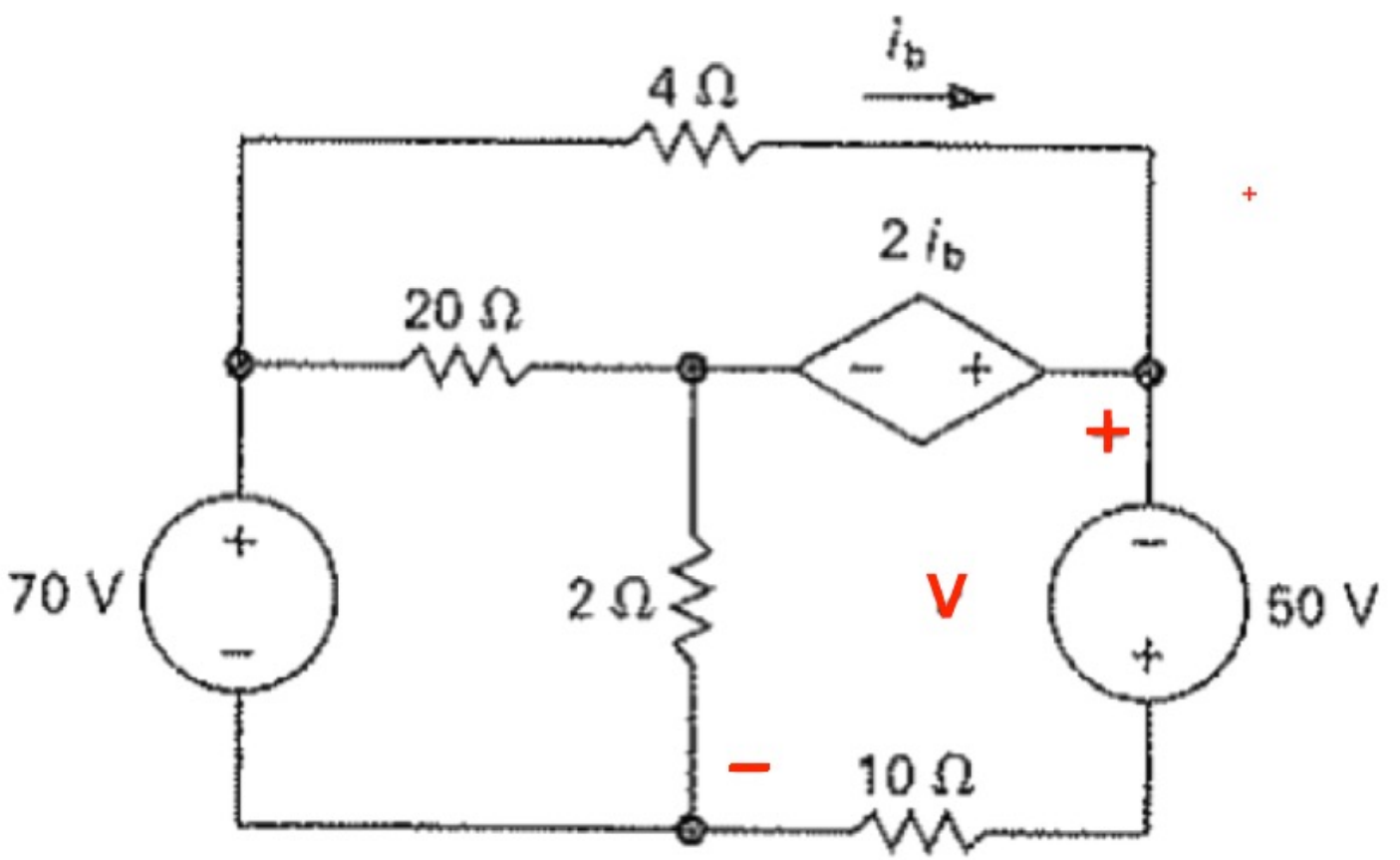

Mesh Analysis

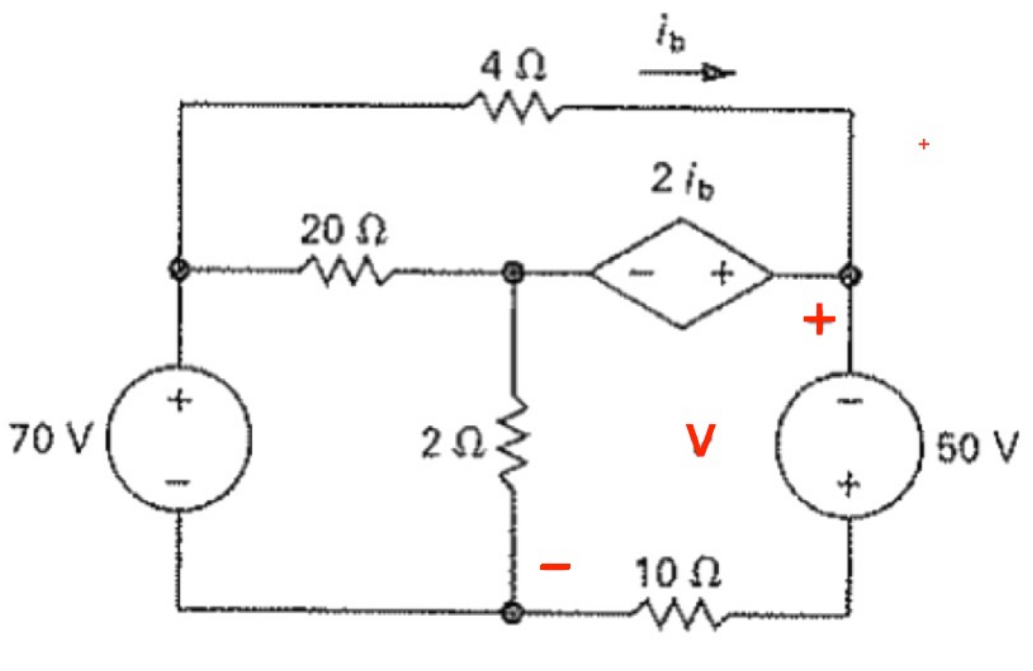

Solution:

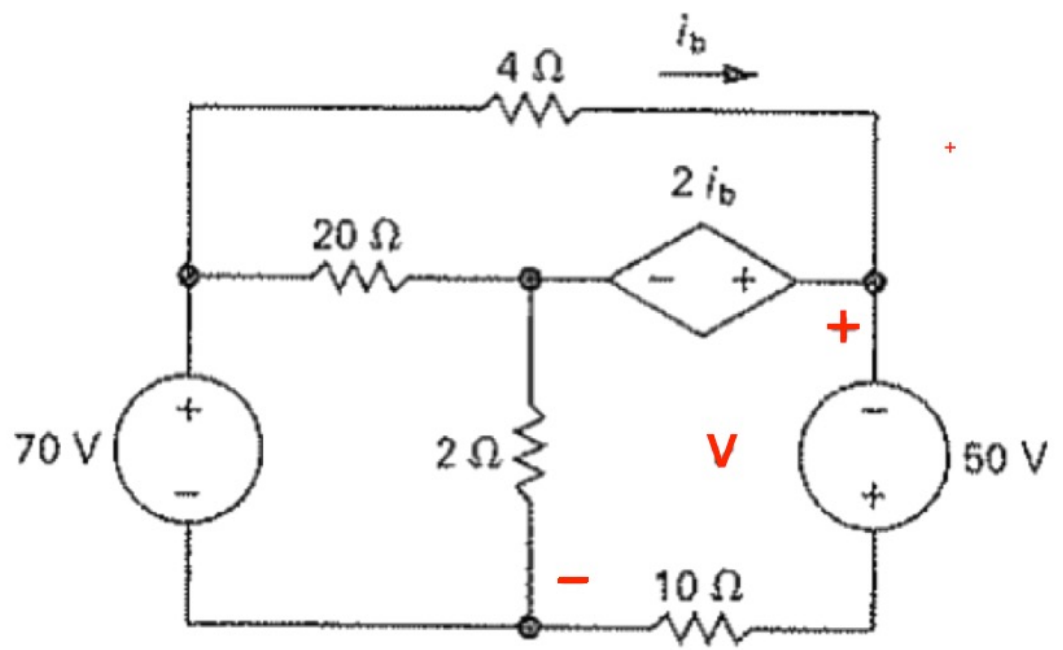

$$70 - 20(i_a - i_b) - 2(i_a - i_c) = 0$$

$$-4i_b - 2i_b - 20(i_b - i_a) = 0$$

$$-2(i_c - i_a) + 2i_b + 50 - 10i_c = 0$$

$i_a = 13$ **amps** $i_b = 10$ **amps** $i_c = 8$ **amps**

$v = 30\ volts$

- Current sources?

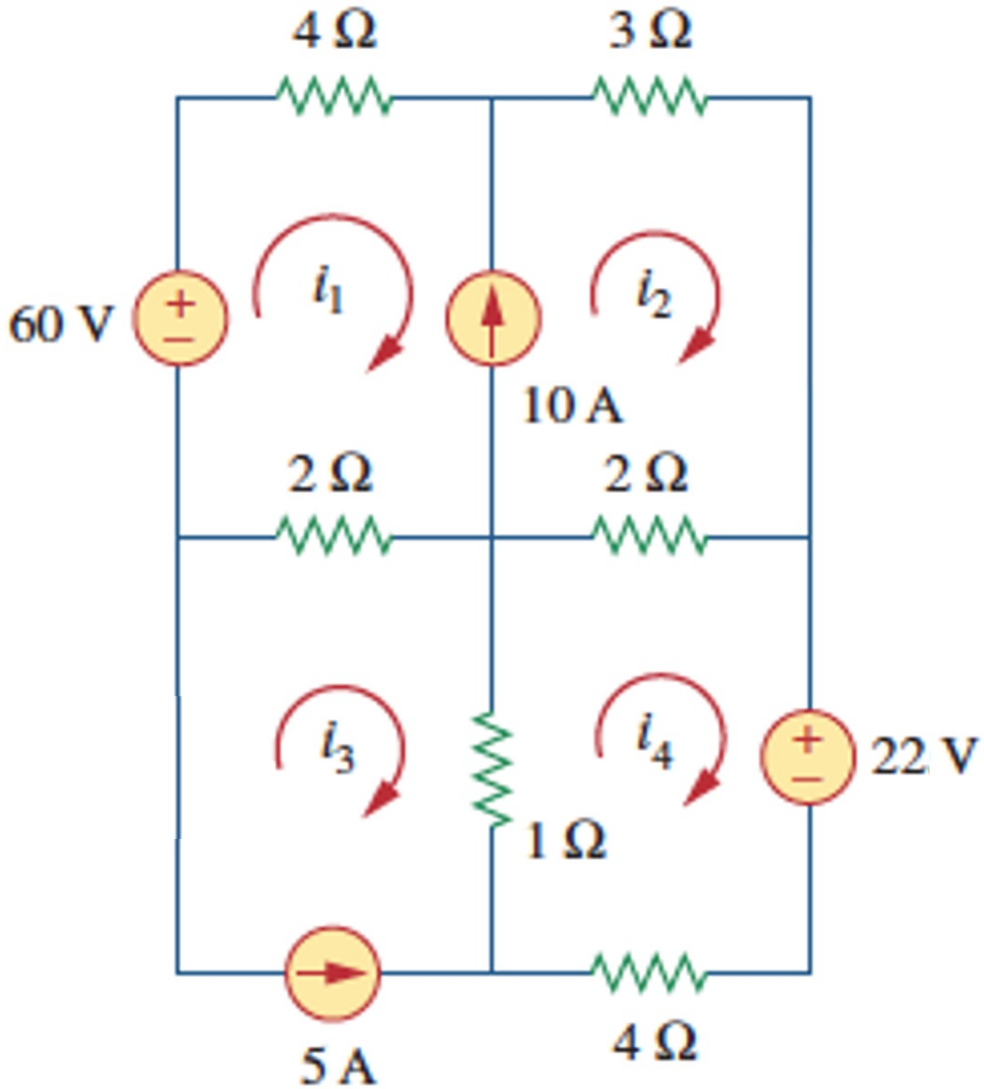

Limitation

- Circuit must be **“planar”**

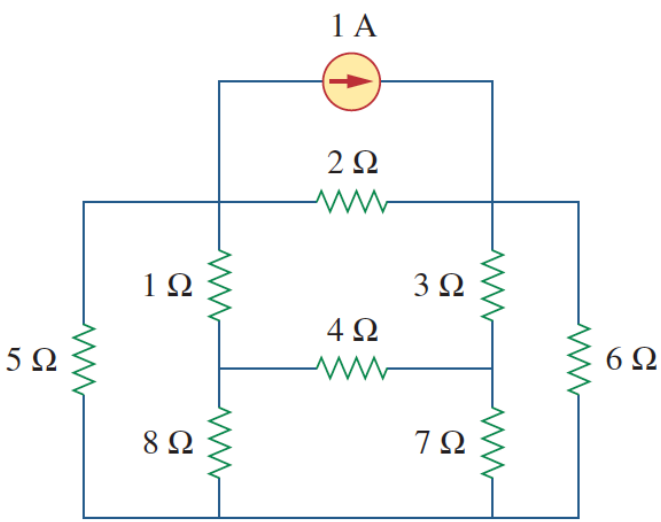

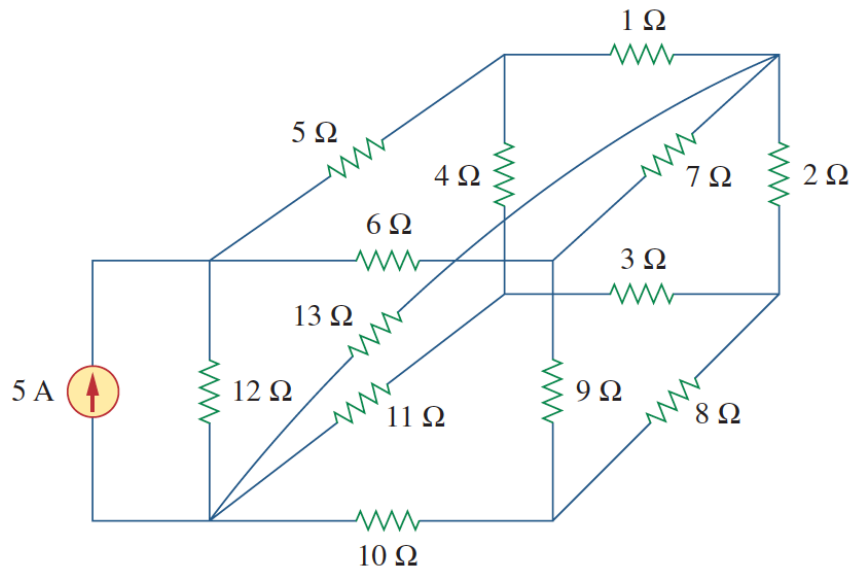

Node vs Mesh?

- Non-planar circuit
- Number of simultaneous equations

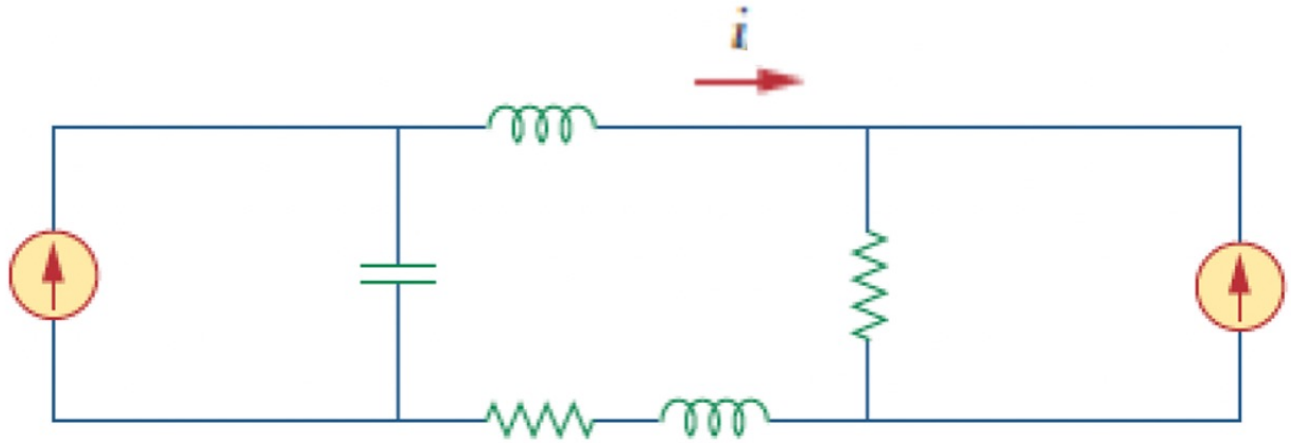

- Personal preference

$i_L = 6.26\ A, i_T = 3.69\ A, i_B = 1.96\ A$

Practice problem:

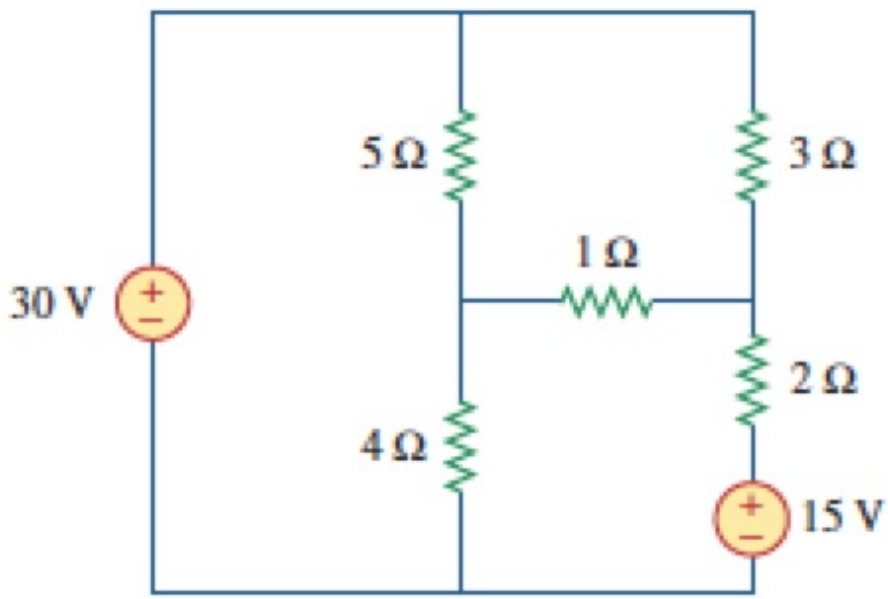

Practice problem:

$i_1 = 1.22\ A, i_2 = 0.174\ A$

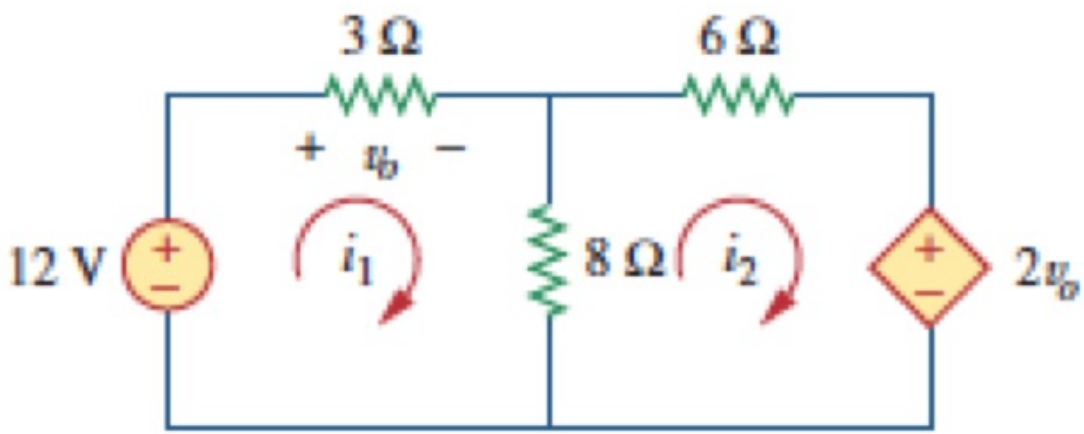

Practice problem: find i

$$i = -\frac{112}{17} + \frac{j28}{17}\ A$$

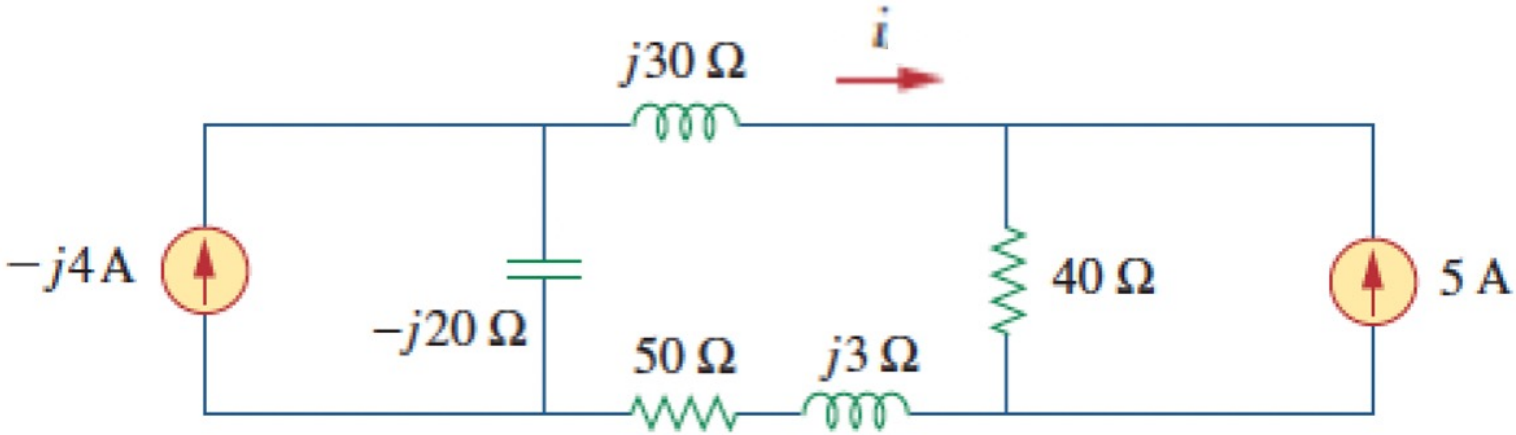

Practice problem: Which of these circuits are planar (i.e. would allow for mesh analysis)?

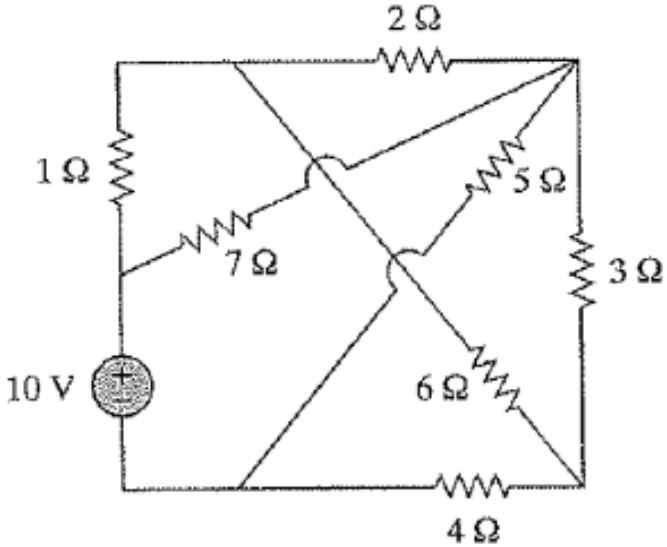

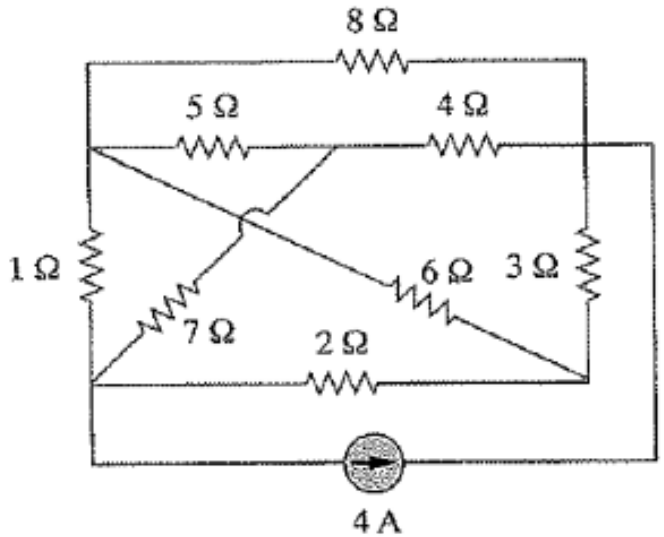

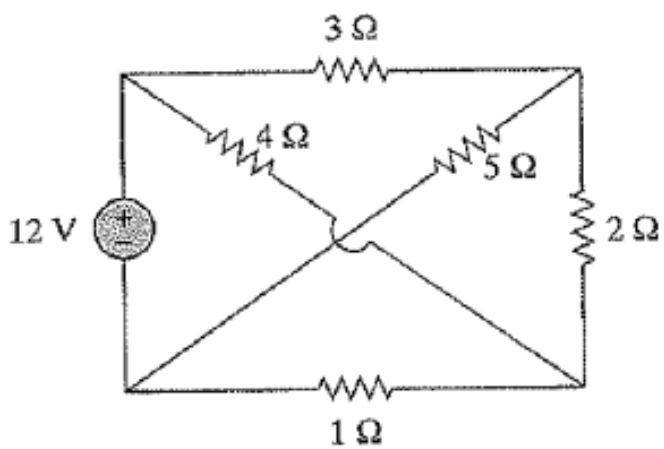

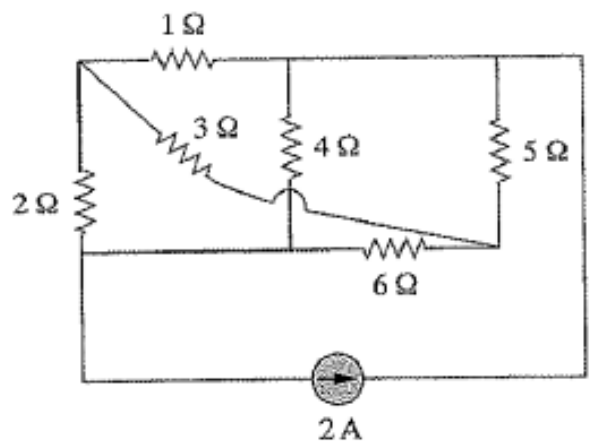

Practice problem: Find the currents i_1, i_2, and i_3.

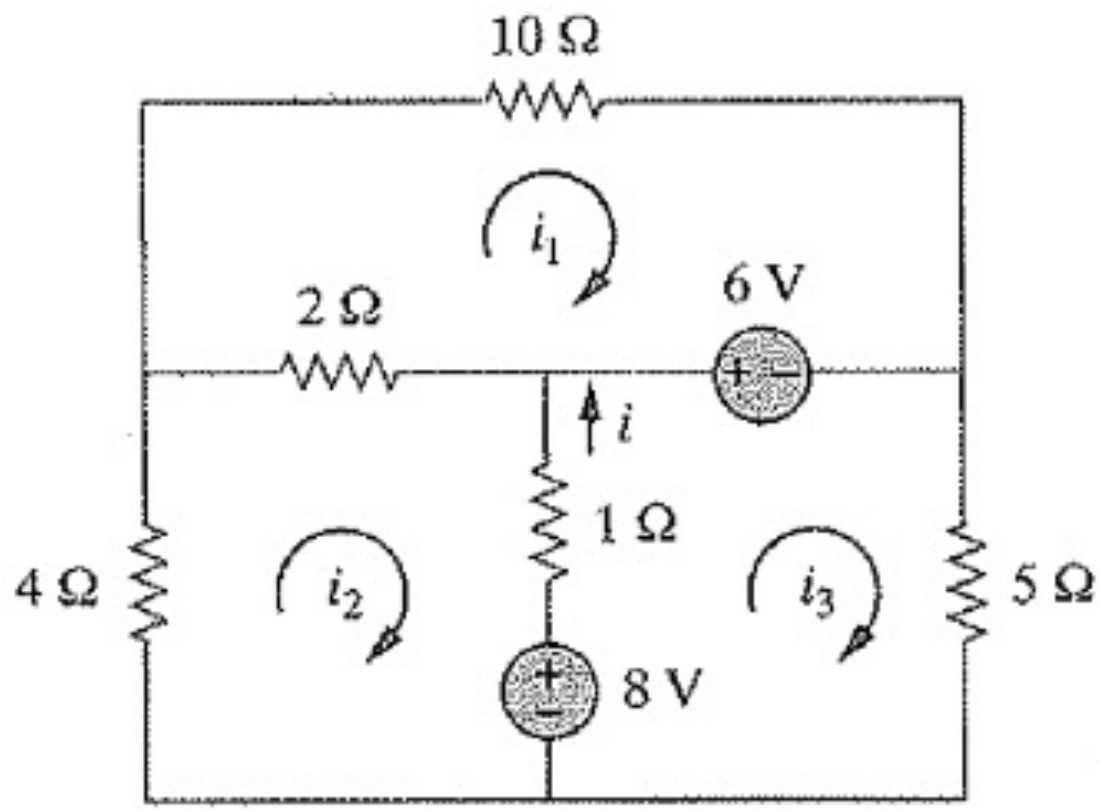

$$i_1 = \frac{77}{234} A$$

$$i_2 = -\frac{240}{234} A$$

$$i_3 = \frac{38}{234} A$$

Practice problem: Find the current i_0

$i_0 = \frac{45}{26}\ A$

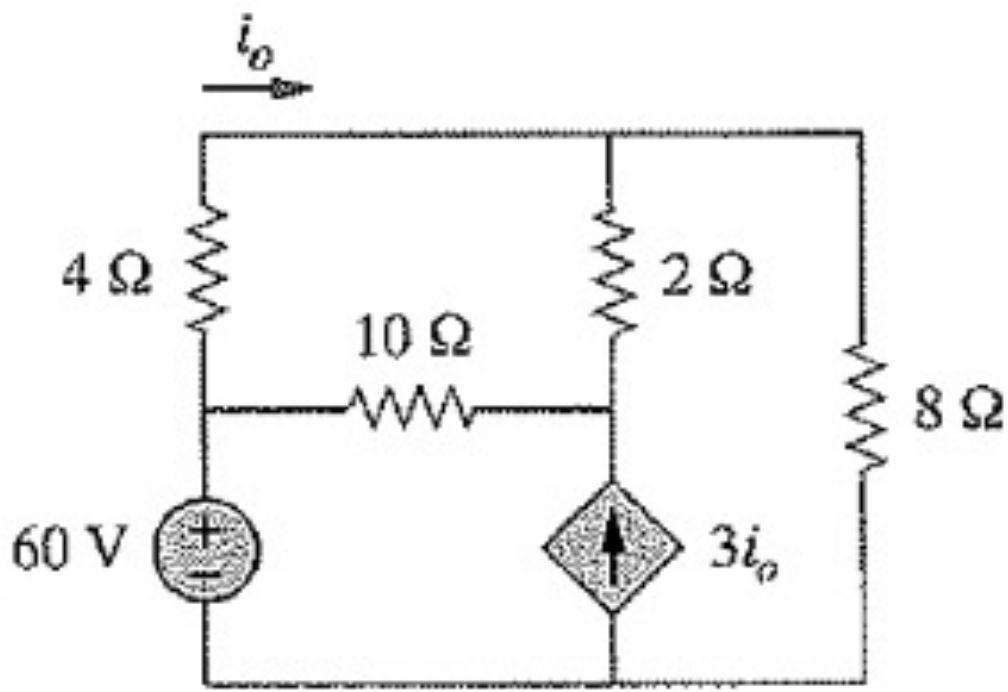

Practice problem: Find the currents i_1, i_2, i_3, and i_4

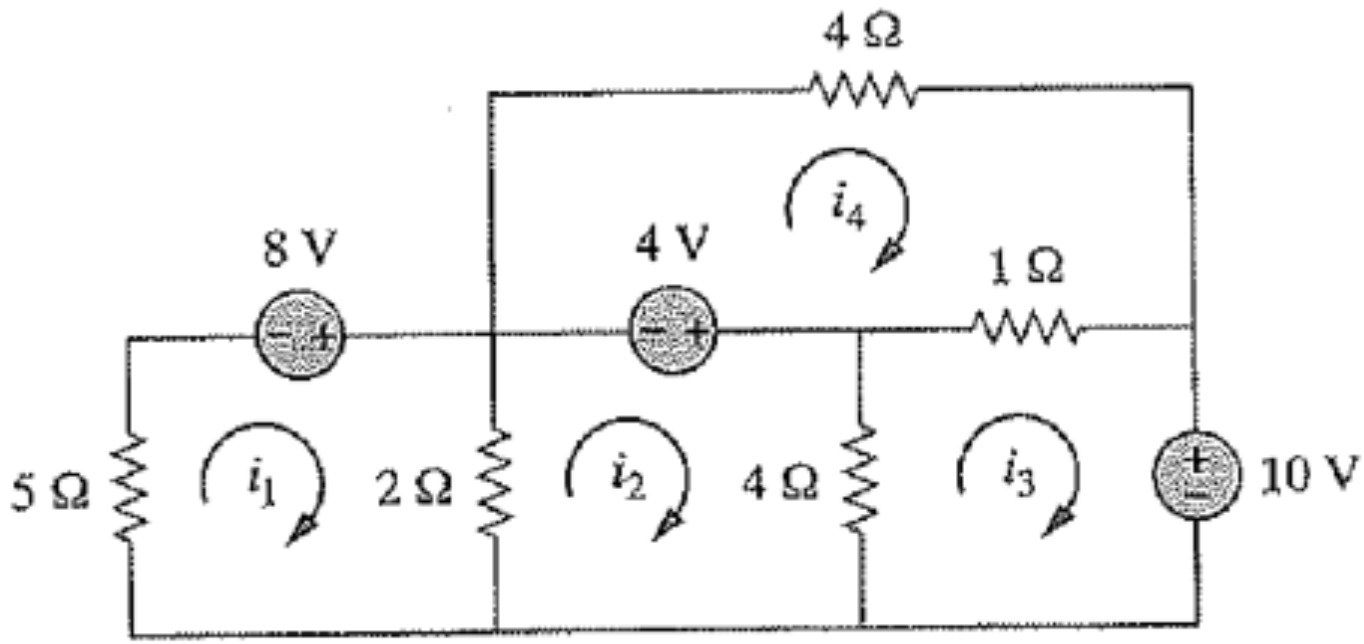

$$i_1 = \frac{68}{88}\ A$$

$$i_2 = -\frac{114}{88}\ A$$

$$i_3 = -\frac{293}{88}\ A$$

$$i_4 = -\frac{129}{88}\ A$$

Practice problem: For the circuit below which method appears easier, mesh or node? Use your preference to find the power dissipated in the 10 kΩ resistor.

$100\ \mu W$

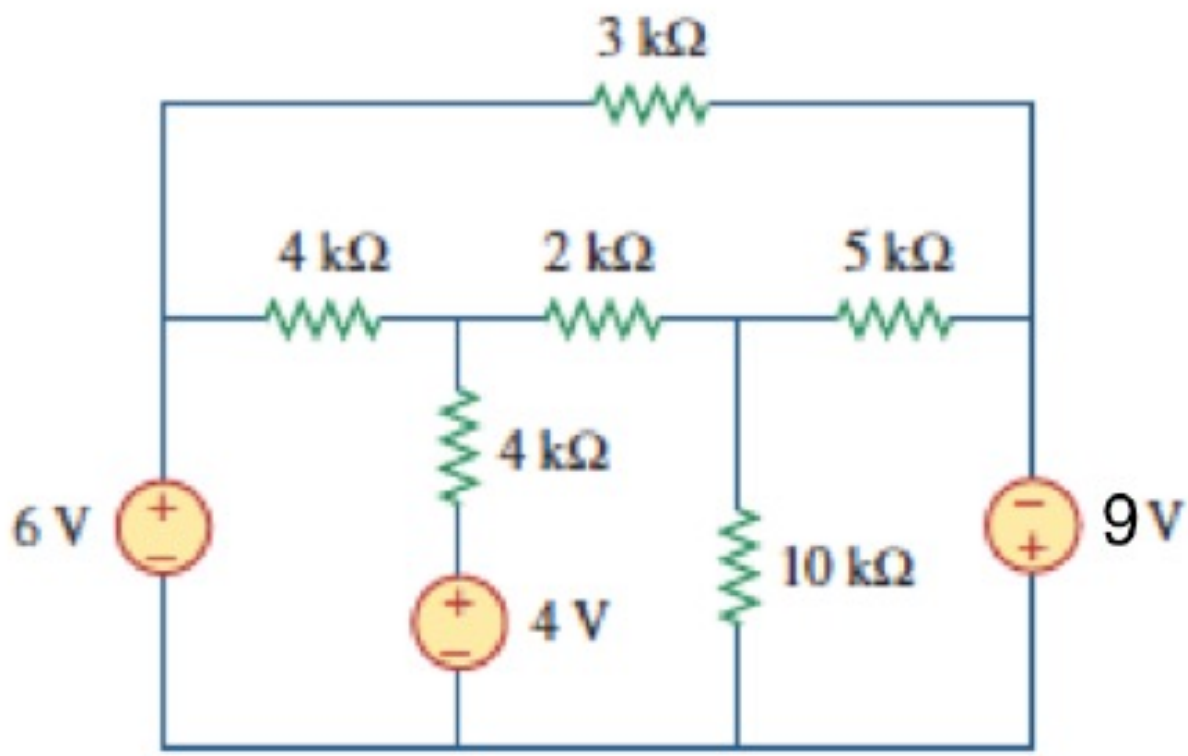

Practice problem: Find $v_0(t)$ assumin that $v_1(t) = 120\cos(100t + 90°)$ V and $v_2(t) = 80\cos 100t$ V

$v_o(t) = 29.9\cos(100t + 46°)\ V$

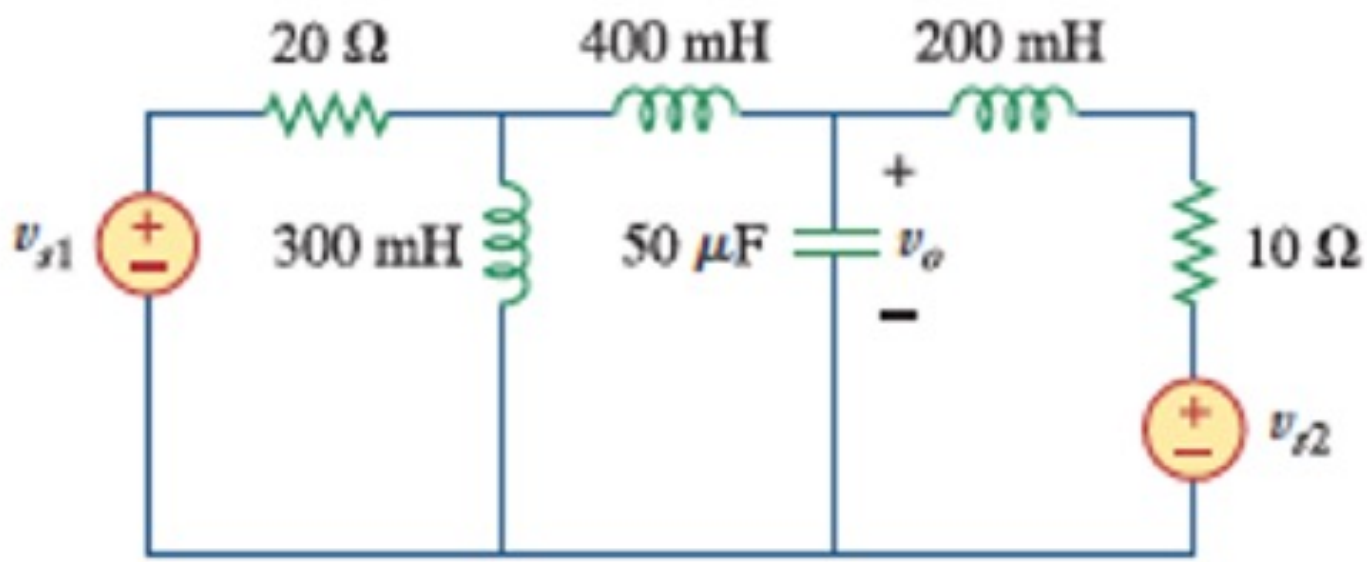

Practice problem: Find the power in the 10 Ω resistor $0\ W$

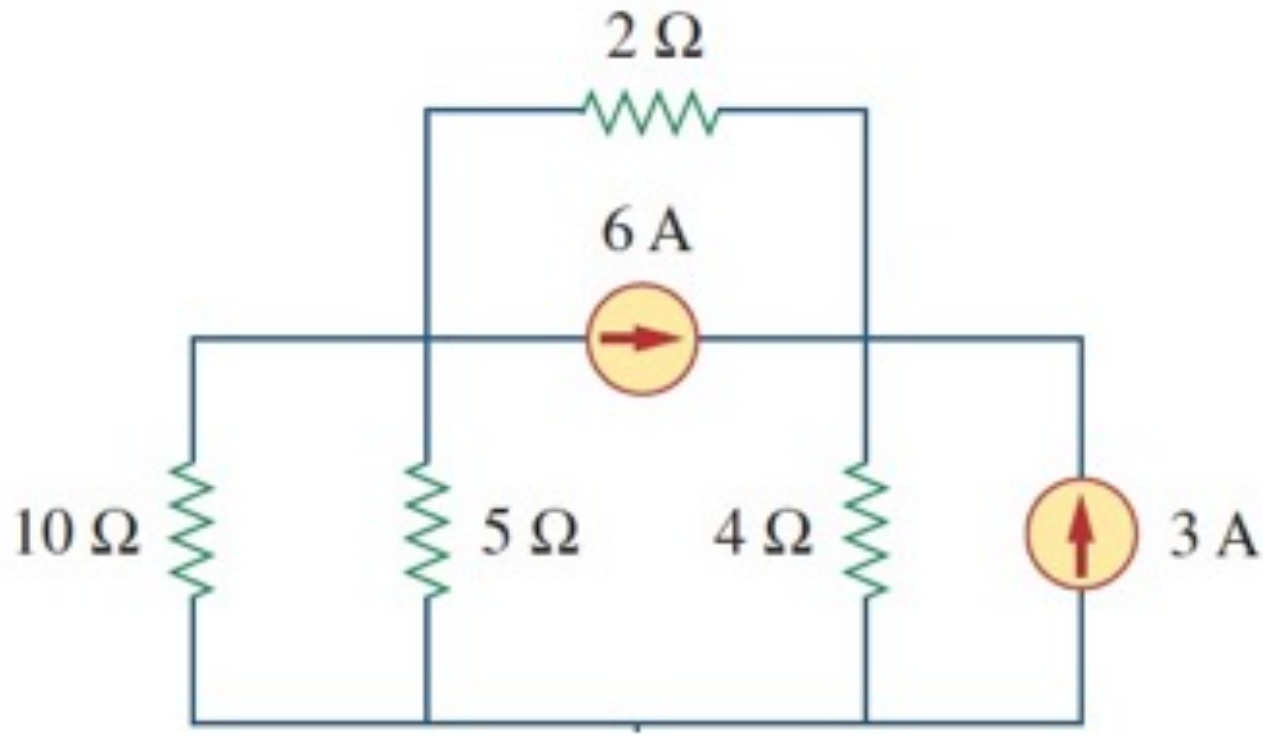

$i = 1.18\ A$

Practice problem: Find i

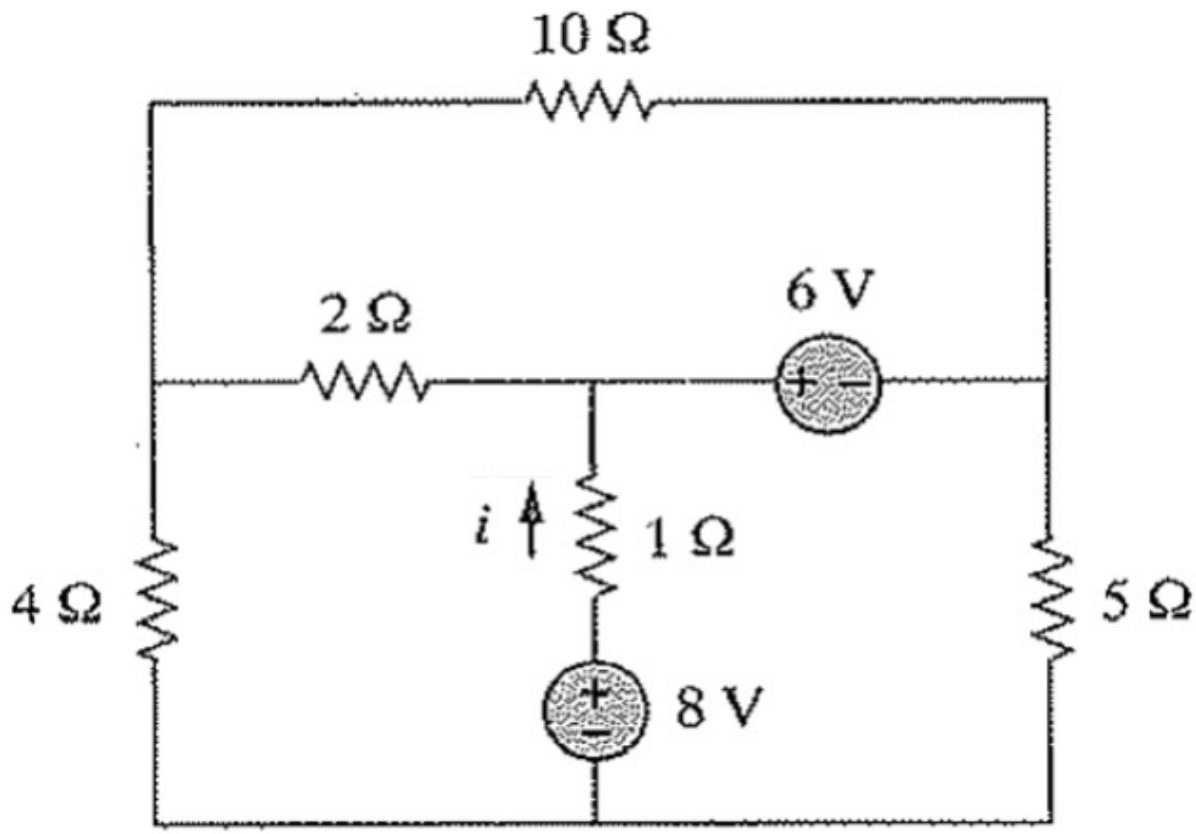

$i_o = 0.4\ A$
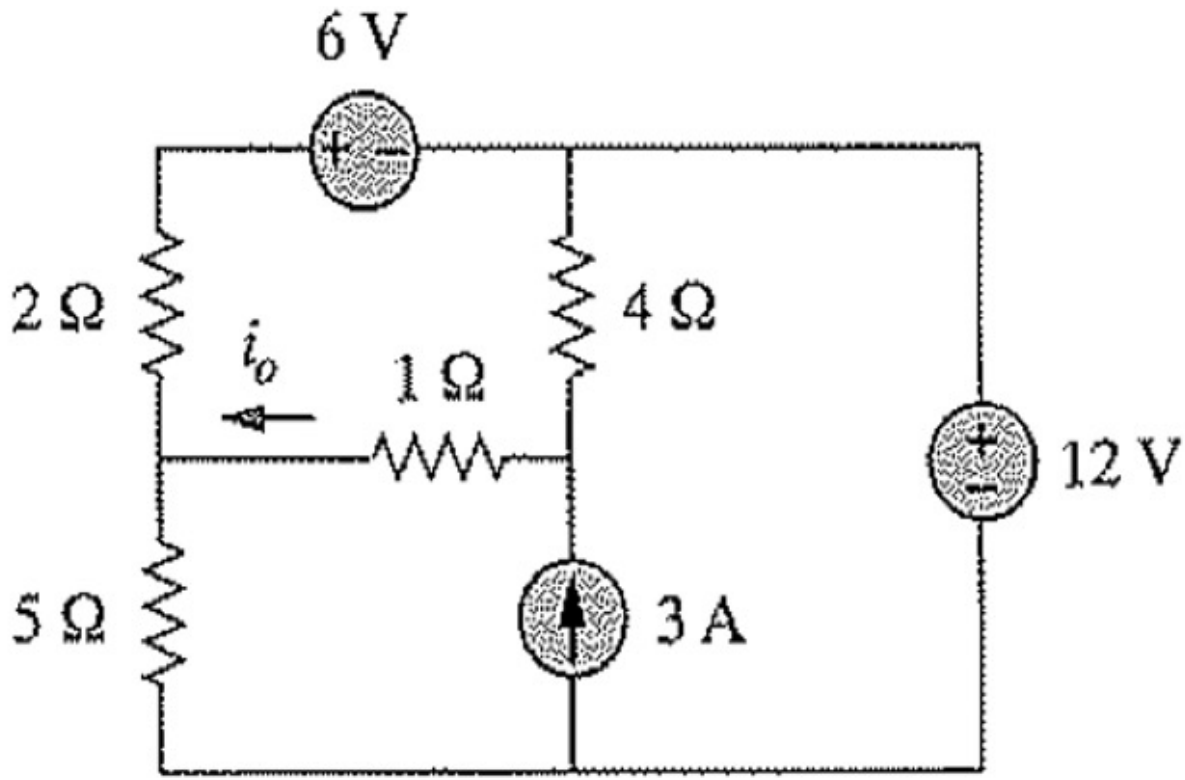
Practice problem: Find i_0