Lecture 26
Theorems – 3 of 6

more Thevenin; Norton

Everyday Example

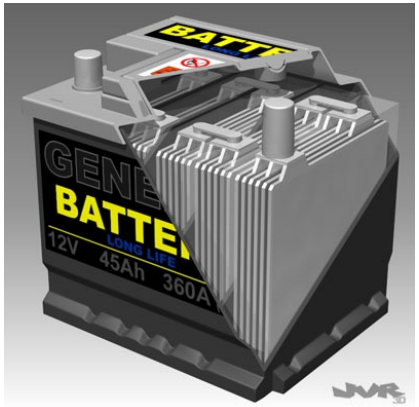

- Car battery – 12.6 volts
- Can provide 100-200 amps!
- Thévenin model:
  - 12.6 volt source
  - 0.05-0.2 Ω resistance

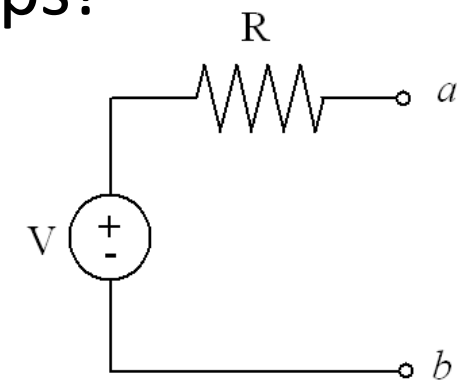

- "Dead" when resistance increases (age/cold)
- Short circuit measurement ? (!)
  - How to test?

Alternative Method – Known Load

- Connect a known resistance across the terminals

$$V = \frac{R}{R_{TH} + R} V_{TH}$$

- Original relationships

$$V_{oc} = V_{TH}$$
$$V_{TH} = I_{sc} R_{TH}$$

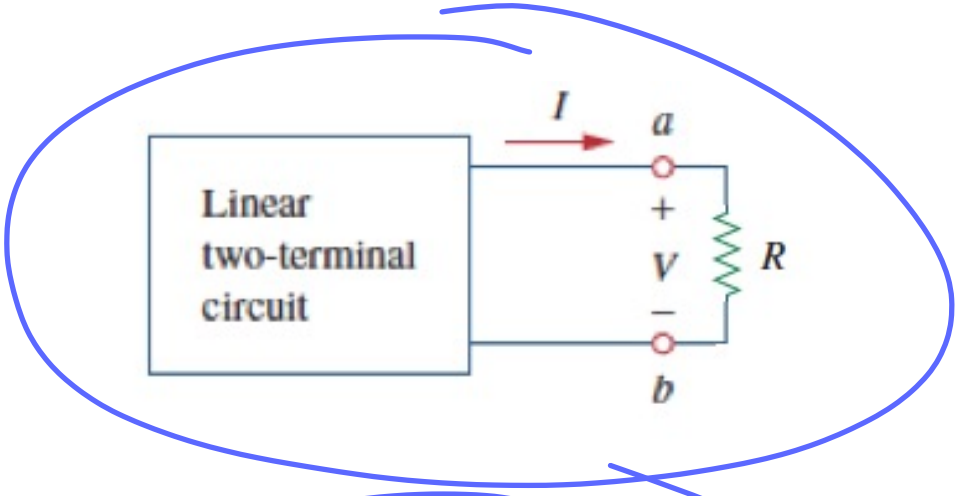

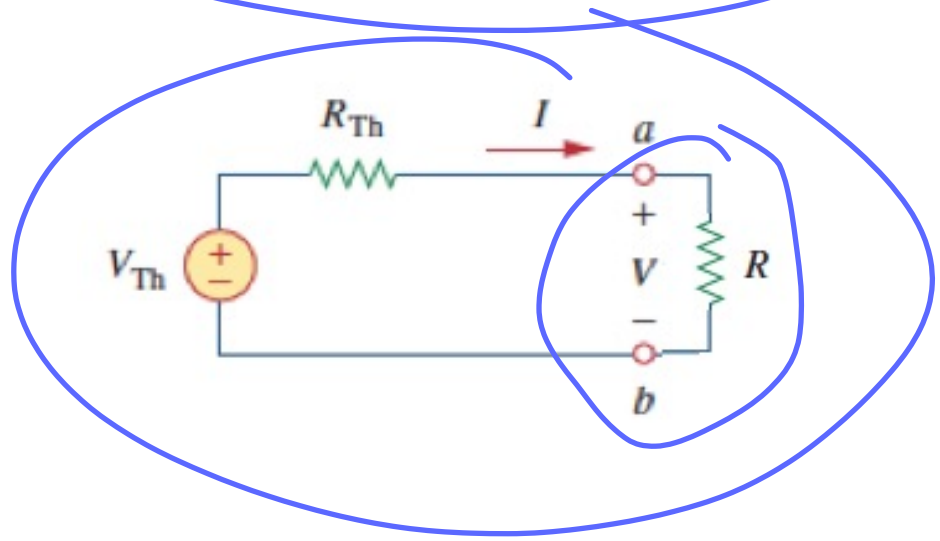

Car battery problem – version 1:

- Open circuit test: 12.6 volts across the terminals

- 10 Ω precision resistor load: 12.46 volts

Solution 1:

- Open circuit test: 12.6 volts across the terminals

$$V_{Th} = V_{oc} = 12.6 \text{volts}$$

- 10 Ω precision resistor load: 12.46 volts

$$V = \frac{R}{R_{TH} + R} V_{TH}$$

$$12.46 = \frac{10}{R_{TH} + 10} 12.6$$

$$R_{TH} = 0.112\ \Omega$$

Car battery problem – version 2:

- 100 Ω precision resistor load: 12.45 volts
- 10 Ω precision resistor load: 12.2 volts

Solution 2:

- 100 Ω precision resistor load: 12.45 volts
- 10 Ω precision resistor load: 12.2 volts

$$12.45 = \frac{100}{R_{TH} + 100} V_{TH} \Rightarrow 100\, V_{TH} - 12.45\, R_{TH} = 1245$$

$$12.2 = \frac{10}{R_{TH} + 10} V_{TH} \Rightarrow 10\, V_{TH} - 12.2\, R_{TH} = 122$$

Solving

$$V_{TH} = 12.48 \text{ volts} \qquad R_{TH} = 0.228\ \Omega$$

"Ohmmeter" Test for R_{Th}

- If **no** dependent sources, then
  - Turn off independent sources
  - Compute equivalent resistance looking into terminals *a*-*b*

$V_{Th} = V_{oc} = 19.2\ V$

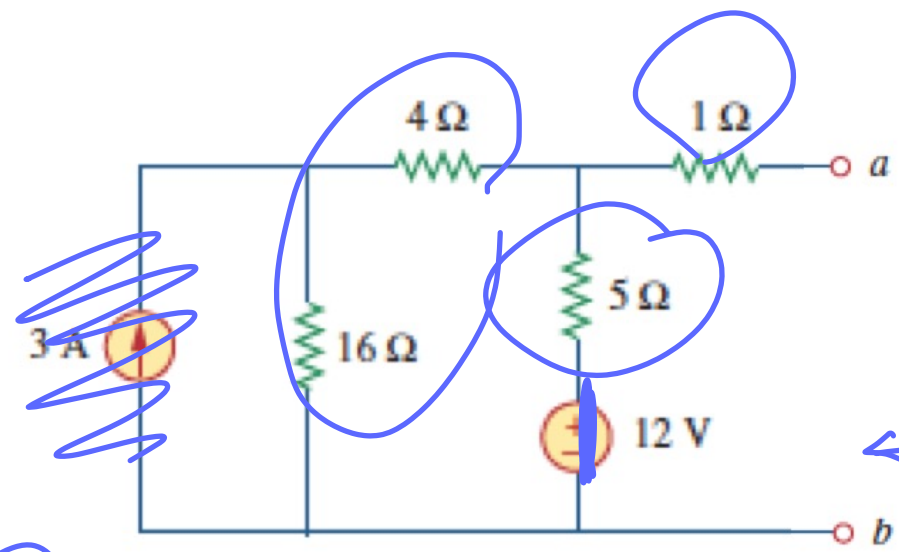

$R_{Th} = 5\ \Omega$

19.2 *V*, 5 Ω

Norton Equivalent

- Recall source transformations, then

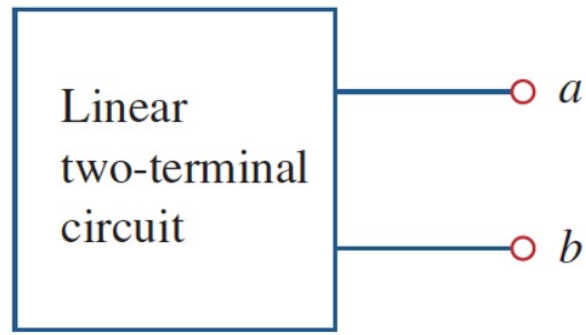

$$R_N = R_{TH}$$
$$I_n = I_{SC}$$

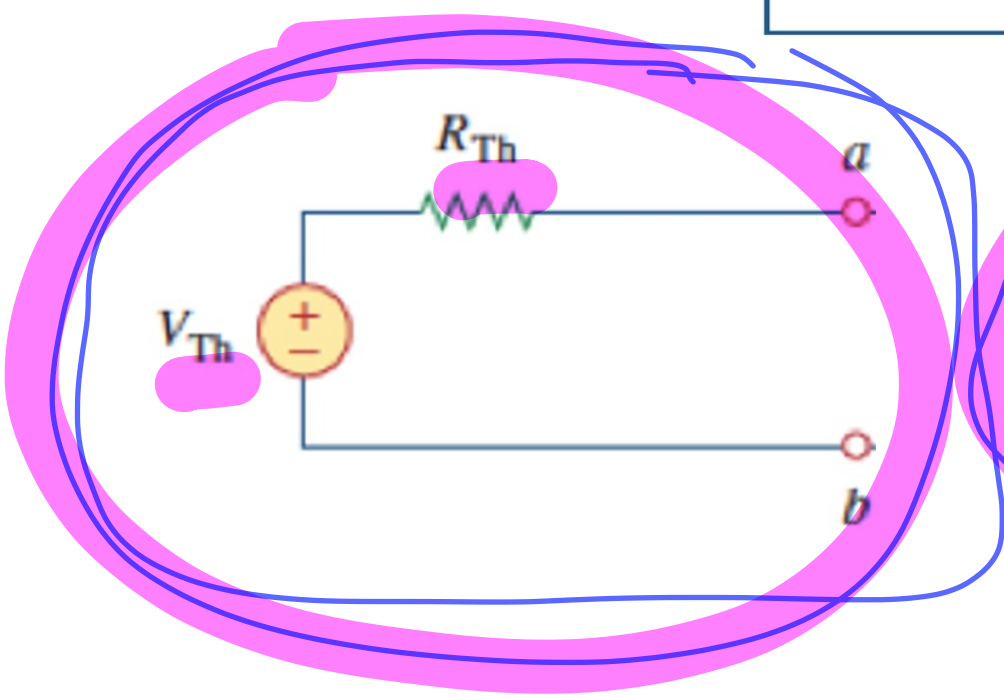

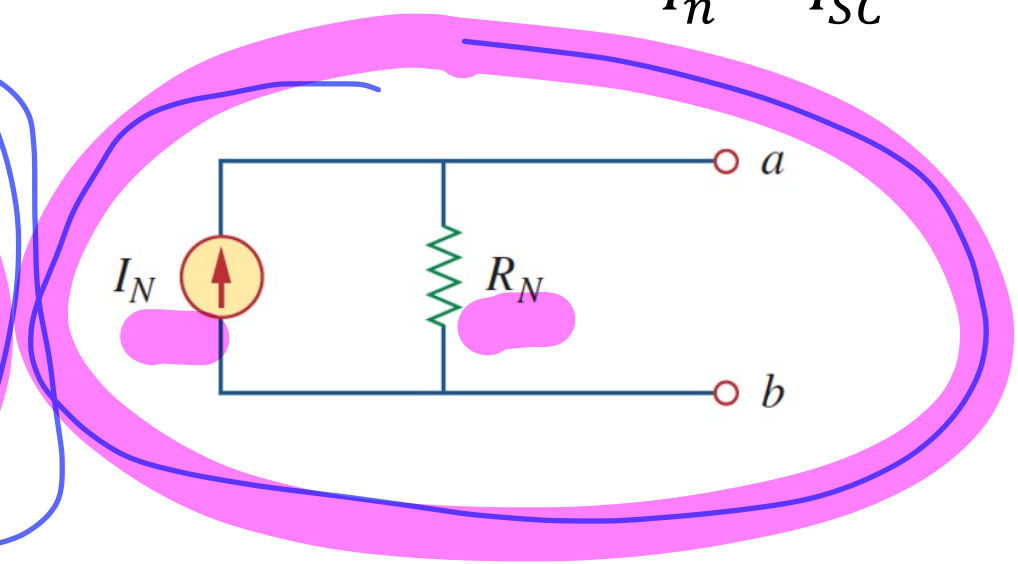

Example: which 2 are equivalent

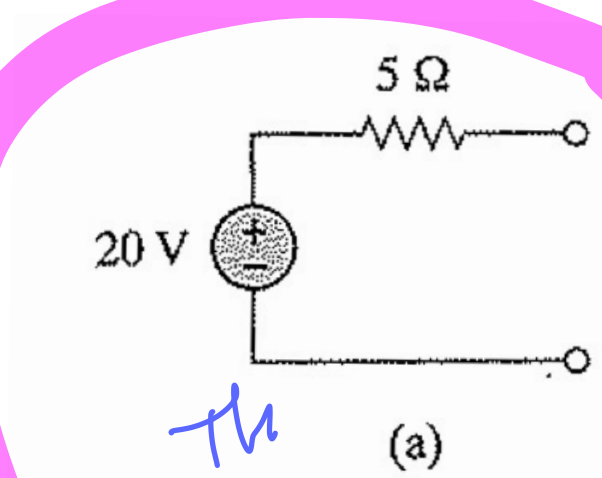

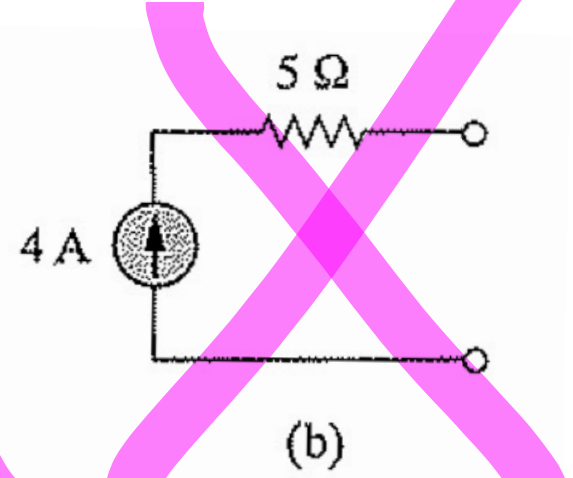

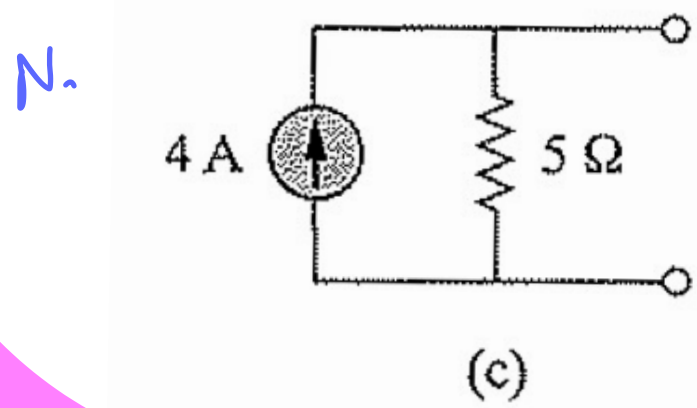

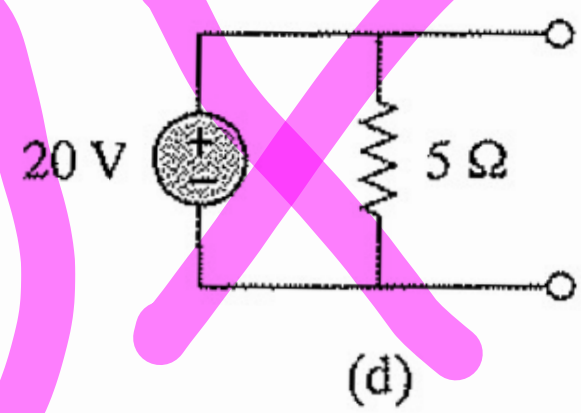

$I_n = I_{sc} = 3\ A$

Example: Find I_N and R_N

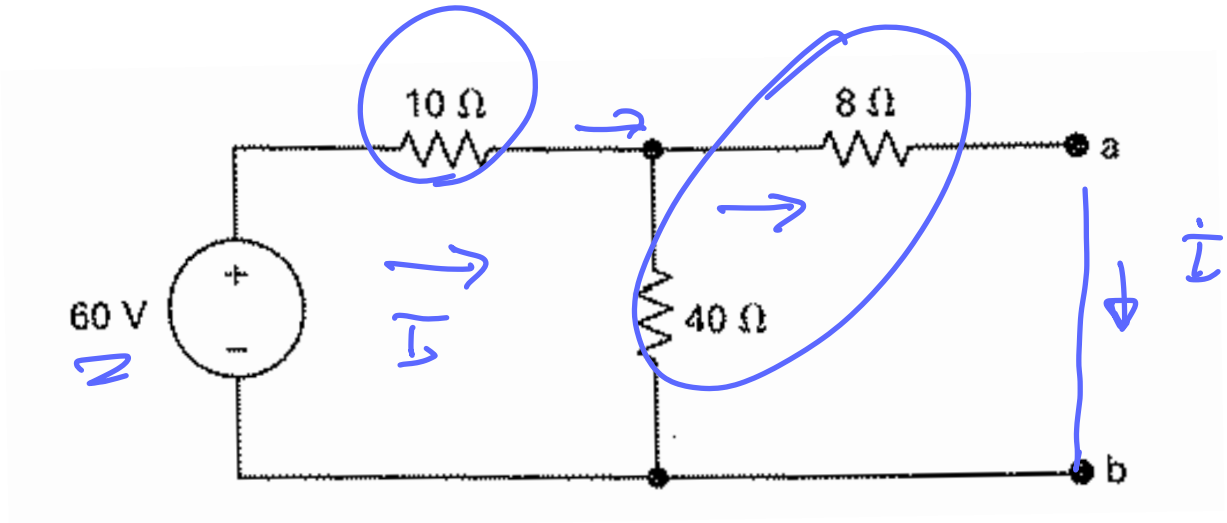

$I_{sc} = \frac{\cancel{40}^{10}}{\cancel{48}_{\cancel{4}}} \cdot 3.6 = 3\ A$

$I = \frac{60}{100/6}$

$= \frac{6 \cdot 6\cancel{0}}{10\cancel{0}} = 3.6\ A$

$\frac{40 \cdot \cancel{8}}{\cancel{48}\ 6} = \frac{40}{6} + 10 = \frac{100}{6}\ \Omega$

$R_n = 16\ \Omega$

$R_{th} = 16\ \Omega$

$V_{th} = 48\ V$

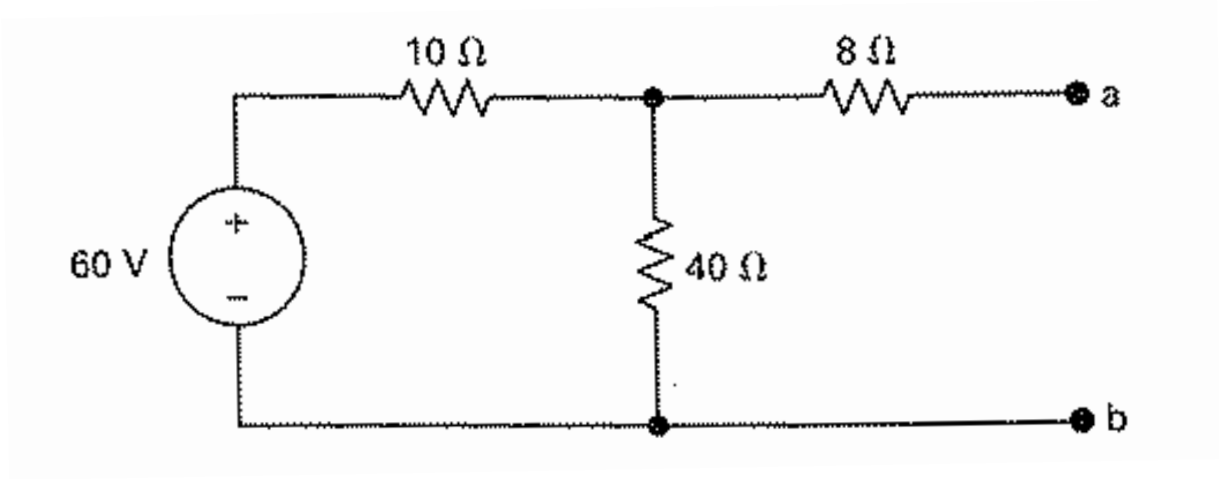

$I_N = 3\ A, R_N = 16\ \Omega$

$50\ V, 20\ \Omega, 2.5\ A$

Practice problem: find Thevenin and Norton

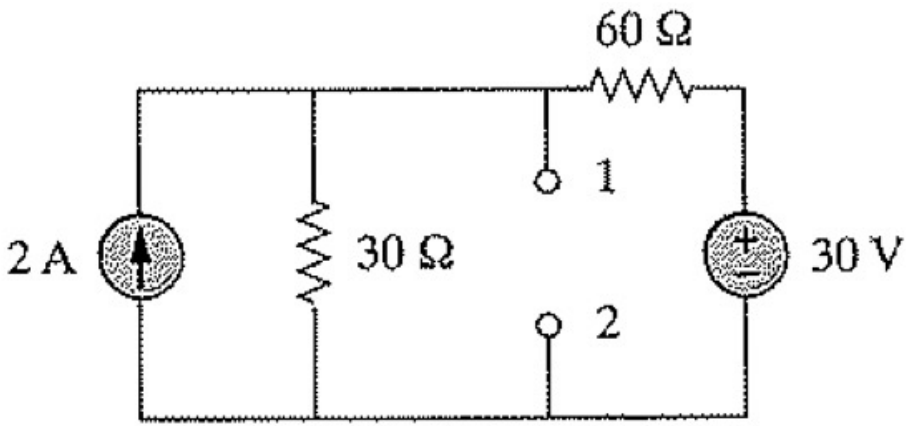

$92\ V, 28\ \Omega, 3.29\ A$
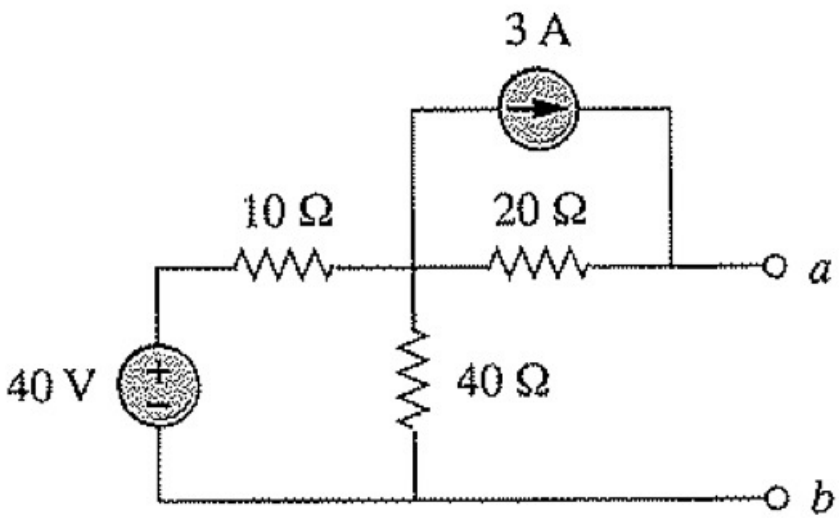
Practice problem: find Thevenin and Norton