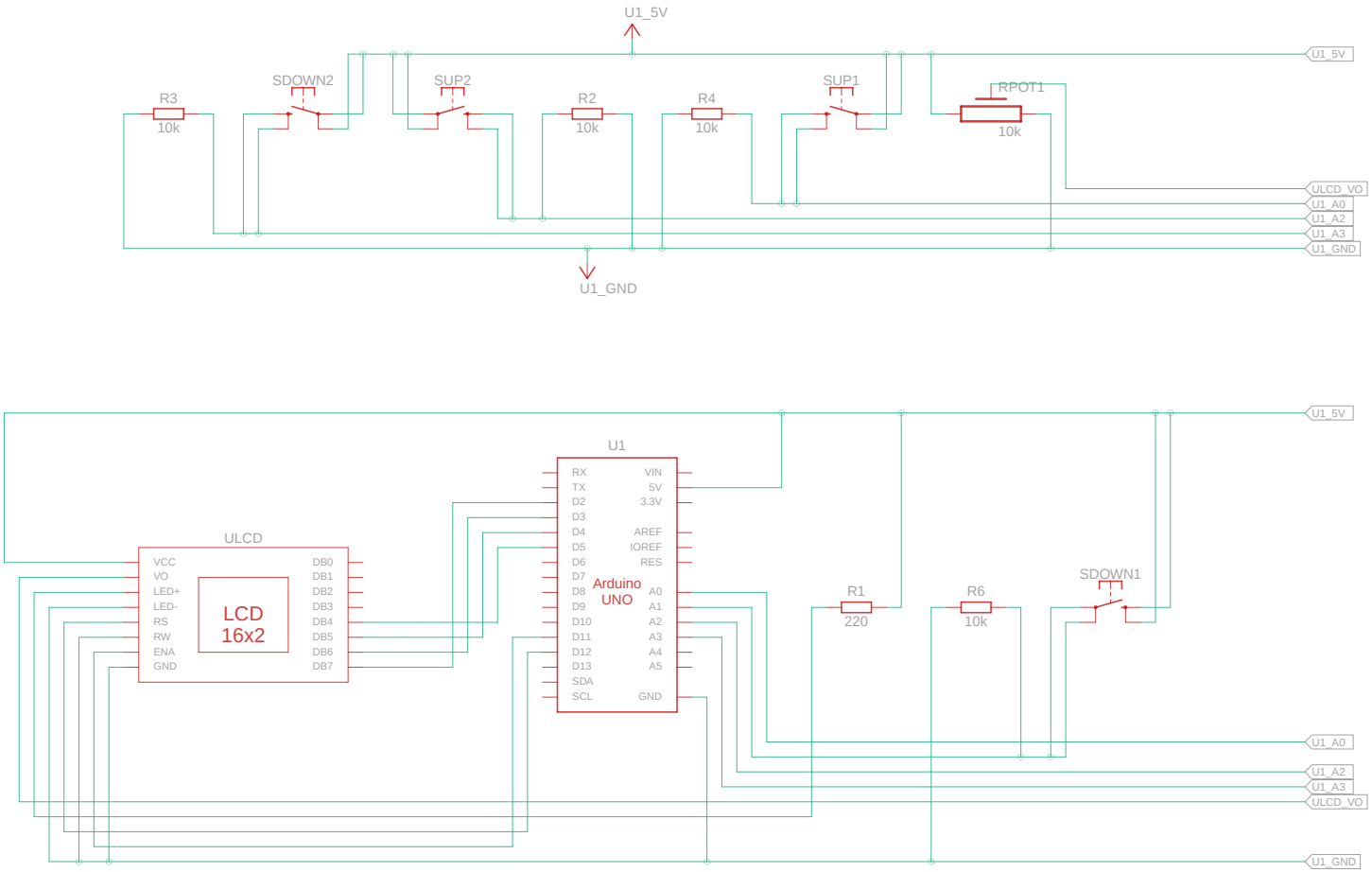

Made with Tinkercad®

Title: PingPong	
Date: 6/13/2022, 11:10:51 PM	Sheet: 1/1