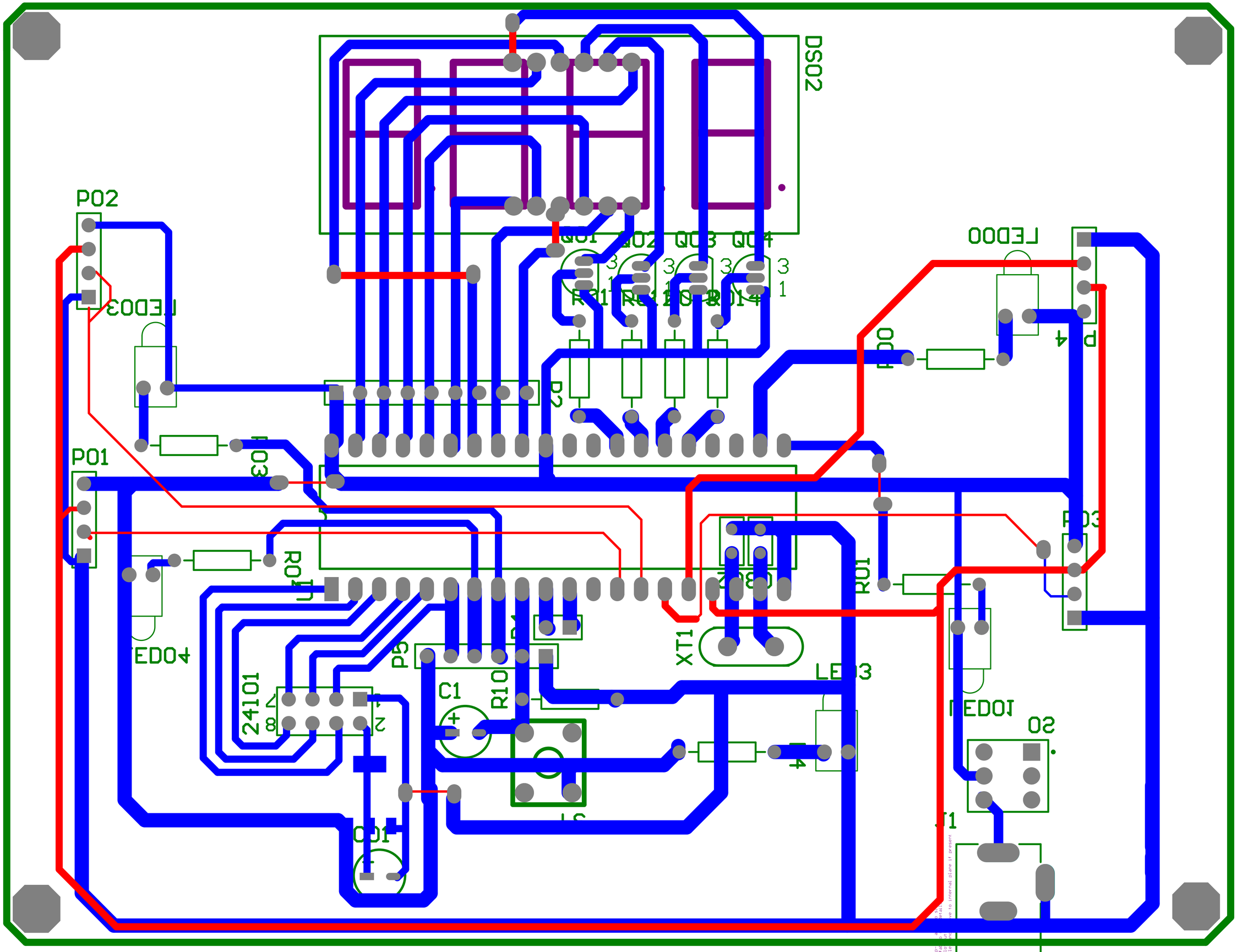
DS02
P02
LED03
Q01
Q02
Q03
Q04
R11
R12
R13
R14
LED00
R00
P04
P03
P01
R03
R04
LED04
24101
P05
C1
R10
XT1
R01
LED03
LED01
P02
C01
J1

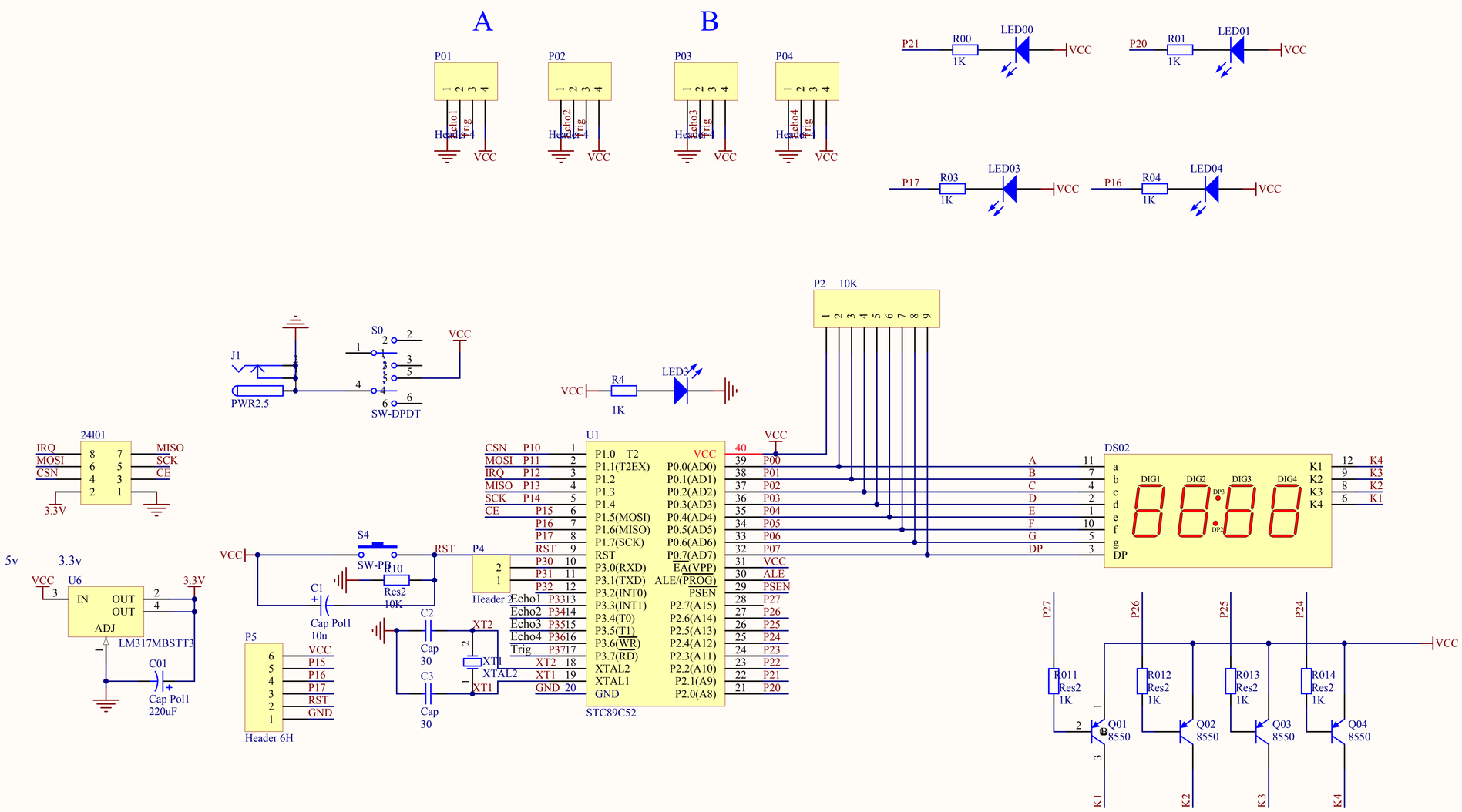

Title		
Size A3	Number	Revision
Date: 2019/4/23		Sheet of
File: C:\Users\...\ .SCHDOC		Drawn By: