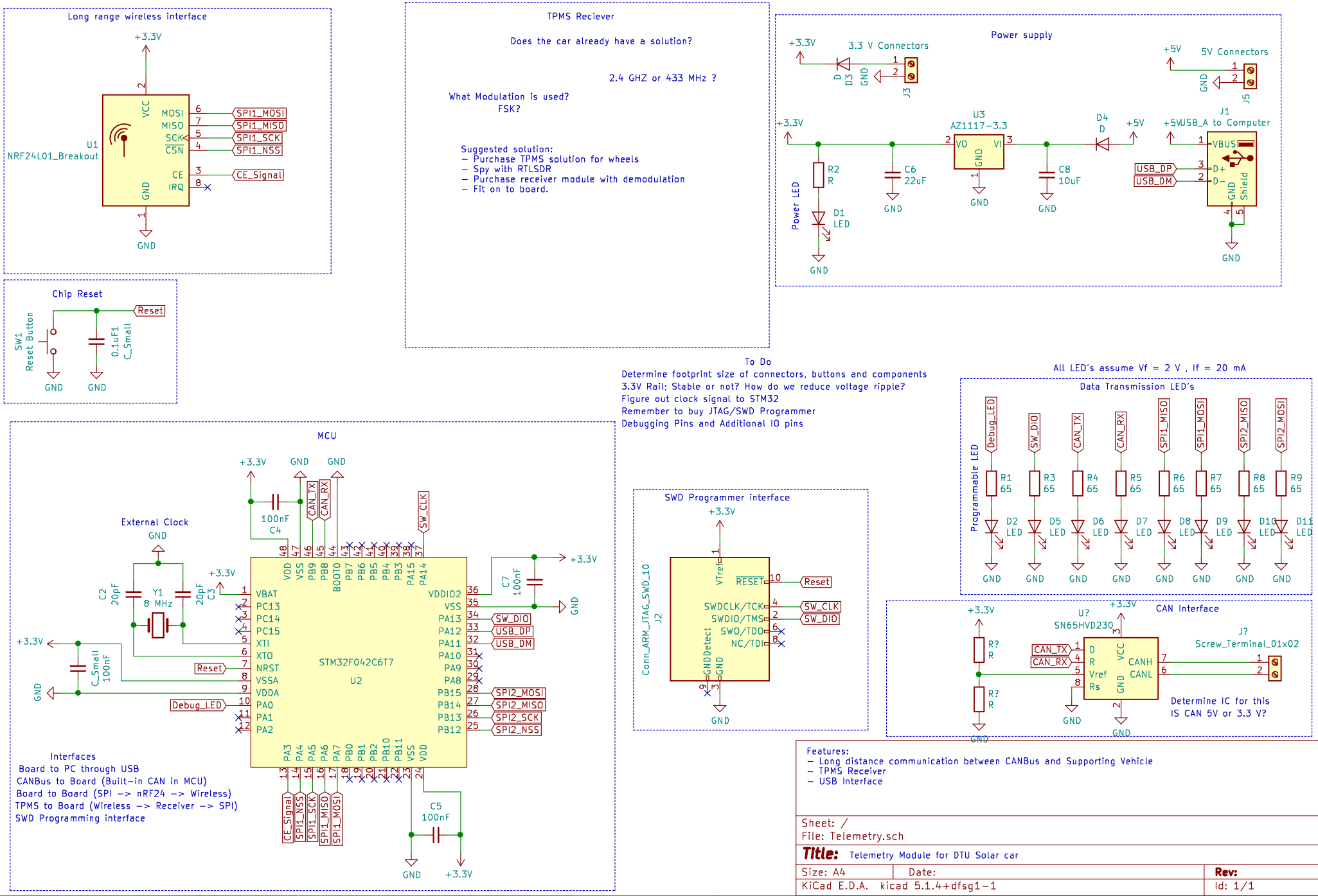
Long range wireless interface
+3.3V
U1
NRF24L01_Breakout
VCC
MOSI
MISO
SCK
CSN
CE
IRQ
GND
SPI1_MOSI
SPI1_MISO
SPI1_SCK
SPI1_NSS
CE_Signal
TPMS Reciever
Does the car already have a solution?
2.4 GHZ or 433 MHz ?
What Modulation is used?
FSK?
Suggested solution:
- Purchase TPMS solution for wheels
- Spy with RTLSDR
- Purchase receiver module with demodulation
- Fit on to board.
Power supply
3.3 V Connectors
5V Connectors
U3
AZ1117-3.3
VO
VI
GND
R2
R
Power LED
D1
LED
C6
22uF
C8
10uF
D4
D
J1
USB_A to Computer
VBUS
D+
D-
Shield
USB_DP
USB_DM
J3
J5
Chip Reset
SW1
Reset Button
0.1uF1
C_Small
Reset
To Do
Determine footprint size of connectors, buttons and components
3.3V Rail; Stable or not? How do we reduce voltage ripple?
Figure out clock signal to STM32
Remember to buy JTAG/SWD Programmer
Debugging Pins and Additional IO pins
All LED's assume Vf = 2 V , If = 20 mA
Data Transmission LED's
Programmable LED
Debug_LED
SW_DIO
CAN_TX
CAN_RX
SPI1_MISO
SPI1_MOSI
SPI2_MISO
SPI2_MOSI
R1 65
R3 65
R4 65
R5 65
R6 65
R7 65
R8 65
R9 65
D2 LED
D5 LED
D6 LED
D7 LED
D8 LED
D9 LED
D10 LED
D11 LED
MCU
External Clock
Y1
8 MHz
C2
20pF
C3
20pF
C_Small
100nF
100nF
C4
C5
100nF
C7
100nF
STM32F042C6T7
U2
VBAT
PC13
PC14
PC15
XTI
XTO
NRST
VSSA
VDDA
PA0
PA1
PA2
VDD
VSS
PB9
PB8
BOOT0
PB7
PB6
PB5
PB4
PB3
PA15
PA14
VDDIO2
VSS
PA13
PA12
PA11
PA10
PA9
PA8
PB15
PB14
PB13
PB12
PA3
PA4
PA5
PA6
PA7
PB0
PB1
PB2
PB10
PB11
VSS
VDD
SW_CLK
SW_DIO
USB_DP
USB_DM
SPI2_MOSI
SPI2_MISO
SPI2_SCK
SPI2_NSS
CE_Signal
SPI1_NSS
SPI1_SCK
SPI1_MISO
SPI1_MOSI
Reset
Debug_LED
Interfaces
Board to PC through USB
CANBus to Board (Built-in CAN in MCU)
Board to Board (SPI -> nRF24 -> Wireless)
TPMS to Board (Wireless -> Receiver -> SPI)
SWD Programming interface
SWD Programmer interface
Conn_ARM_JTAG_SWD_10
J2
VTref
RESET
SWDCLK/TCK
SWDIO/TMS
SWO/TDO
NC/TDI
GNDDetect
CAN Interface
U?
SN65HVD230
D
R
Vref
Rs
VCC
CANH
CANL
J?
Screw_Terminal_01x02
R?
R
Determine IC for this
IS CAN 5V or 3.3 V?
Features:
- Long distance communication between CANBus and Supporting Vehicle
- TPMS Receiver
- USB Interface
Sheet: /
File: Telemetry.sch
Title: Telemetry Module for DTU Solar car
Size: A4
Date:
Rev:
KiCad E.D.A. kicad 5.1.4+dfsg1-1
Id: 1/1