Repair Manual

911 Carrera
(993)

Volume VI:
Air conditioning
Vehicle electrics

Dr. Ing. h.c. F. Porsche Aktiengesellschaft

Volume I: General Engine	**Overall vehicle – General**	**0**
	Maintenance, diagnosis	03
	Engine	**1**
	Engine – Crankcase, mounting	10
	Engine – Crankshaft, pistons	13
	Engine – Cylinder head, valve drive	15
	Engine – Lubrication	17
	Engine – Cooling	19
	Fuel, exhaust system, engine electrical system	**2**
	Fuel supply, control	20
	Exhaust system – Turbocharging	21
	Fuel system, electronic injection	24
	Fuel system, K-Jetronic	25
	Exhaust system	26
	Starter, power supply, GRA	27
	Ignition system	28
Volume II: Transmission Manual transmission	**Transmission**	**3**
	Clutch, control	30
	Manual transmission – Controls, case	34
	Manual transmission – Gears, shafts, inner operation	35
	Final drive, differential, differential lock	39
Volume III: Transmission Automatic transmission	**Transmission**	**3**
	Automatic transmission – Torque converter	32
	Automatic transmission – Controls, case	37
	Automatic transmission – Gears, control	38
	Final drive, differential, differential lock	39
Volume IV: Chassis	**Chassis**	**4**
	Front wheel suspension, drive shaft	40
	Rear wheel suspension, drive shaft	42
	Wheels, tires, alignment	44
	Anti-Lock System (ABS)	45
	Brakes – Mechanical	46
	Brakes – Hydraulics, regulator, booster	47
	Steering	48

Volume V:	**Body**	**5**
Body	Body front section	50
	Body center section, roof, frame	51
	Body rear section	53
	Hoods, lids	55
	Front doors, Central Locking System	57
	Exterior body equipment	**6**
	Sunroof	60
	Soft top, hardtop	61
	Bumpers	63
	Glasses, window control	64
	Exterior equipment	66
	Interior equipment, passenger protection	68
	Interior body equipment	**7**
	Trim, insulation	70
	Seat frames	72
	Seat upholstery, covers	74
Volume VI:	**Air conditioning**	**8**
Air conditioning	Heater	80
Vehicle electrics	Ventilation	85
	Air conditioning	87
	Auxiliary air conditioning system	88
	Electrical system	**9**
	Instruments, alarm	90
	Radio, telephone, on-board computer	91
	Windshield wipers and washer	92
	Exterior lights, lamps, switches	94
	Interior lights, lamps, switches	96
Volume VII:	**Electrical system**	**9**
Wiring diagrams	Wiring	97
Volume VIII:	**Diagnosis**	**D**
Diagnosis	Self-diagnosis	03
	DME Diagnosis	24
	Tiptronic Diagnosis	37
	PDAS Diagnosis	39
	ABS Diagnosis	45
	Airbag Diagnosis	68
	Heater Diagnosis	80
	Alarm Diagnosis	90

Preface

Structure

The "Technical Literture" for the "911 Carrera (993)" model is basically structured as before, i.e. the structure follows the familiar repair groups.

A new feature is that the structure includes the main groups **0 to 9** and the main group **D**.

Main groups:	0	Complete vehicle – General
	1	Engine
	2	Fuel, exhaust, engine electrical system
	3	Transmission
	4	Chassis
	5	Body
	6	Body equipment, outside
	7	Body equipment, interior
	8	Air conditioning
	9	Electrical system
	D	Diagnosis

Layout

The layout in the below items remains unchanged throughout the repair manual

1. Table of tightening torques
2. Special tools required
3. Exploded views
4. Legends for the exploded views
5. Assembly notes / use of special tools

As a new feature, however, the former item 6 (Repair group diagnosis) is no longer filed in the volume corresponding to the respective repair group. The **Diagnosis test plans / diagnosis procedures** have been combined in a **separate Diagnosis volume** broken down according to the main groups 0 to 9.

Another new feature is that the contents of the "Service Information Technik" are indicated in the Repair Manual. This brochure concentrates on a description of the design and function of components and of the new features introduced for a particular model year.

Service Number

All major repair procedures and repair descriptions are identified by a two- or four-digit **Service Number** completed by two additional digits to identify the work that corresponds to the first six digits of the working position number in the Working Times and Damage Catalog.

Example: 30 37 37 Dismantling and assembling clutch control shaft

Explanation: **30** **37** **37** 50 (full working position number)

Repair group
here: Clutch, control

Component designation
here: Clutch control shaft

Activity
here: Dismantling and assembling

Index
here: Removed

Presentation in the various documents

30 37 37 50	Working position no. from **Working Times and Damage Catalog**, consisting of repair group, component designation, activity and index
30 37 37	Six-digit number in **Repair Manual**, consisting of repair group, component designation and activity
30 37	Service number in **Service Information**, consisting of repair group and component designation

Goal

The introduction of a service number in the "technical literature" is intended to facilitate standardization and positive identification to allow direct cross-referencing among the various documents. This is of particular importance with regard to the use of electronic media.

VI Air conditioning, Vehicle Electrics

The **Repair Manual of the 911 Carrera (993)** also includes the **911 Carrera 4 manual (993 four-wheel drive)**. The 911 Carrera (993) is the basic model covered by the repair operations described in this Manual. "911 Carrera (993)" is also indicated in the header of each page.

Descriptions of repair operations that deviate for the 911 Carrera 4 will be included after the respective 911 Carrera section. The repair descriptions of both models are separated by a cover page. All pages included after the cover page (separation sheet) have the "911 Carrera 4" heading. To facilitate distinction, **the page numbering will start with 100.**

Where different or additional repair procedures apply to the 911 Targa (993), these are given following the repair instructions for the 911 Carrera or 911 Carrera 4. The repair instructions for the 911 Targa (993) are separated by a title page. "**911 Targa (993)**" appears at the top of each page after in the title page (divider). In addition, **the page numbering starts with 200.**

8 Air conditioning

8	Technical data / Air conditioner . .	. 8 - 1
80	**Heater**	
80 59 01	Checking ballast resistor of rear blower . .	. 80 - 1
80 13 19	Removing and installing rear heater blower	. 80 - 3
85	**Ventilation**	
85 16 15	Adjusting the flaps of the heater A/C unit	. 85 - 1
85 51 15	Adjusting the temperature mixing valves	. 85 - 2
85 30 19	Removing and installing heater fresh air blower motors	. 85 - 3
87	**Air Conditioning**	
87	Pressure and temperature specifications	. . 87 - 1
87 01 19	Dismantling and assembling heater A/C unit	. . 87 - 3
87 02 19	Removing and installing heating and air conditioning control . .	. . 87 - 9
87 83 19	Removing and installing A/C system pressure switch	. . 87 - 11
87 03	Safety instructions for handling refrigerant R 134 a	. . 87 - 13
87 03 17	Servicing the A/C system	. . 87 - 14
87 55 19	Removing and installing liquid tank	. . 87 - 25

Printed in Germany - 16, 1996

87 50 19	Removing and installing condenser	87 - 27
87 53 19	Removing and installing condenser fan	87 - 29
87 01 19	Removing and installing heater / air conditioning unit	87 - 31
87 34 19	Removing and installing compressor	87 - 35
87 27 19	Removing and installing magnetic ciutch	87 - 37
87 70 19	Removing and installing expansion valve	87 - 39

9 Electrics

90 Instruments, Alarm System

90 73	Tuning model '94 remote control units	90 - 1
90 68	Immobilizer from model '95	90 - 7
90 68 19	Removing and installing immobilizer control unit	90 - 9
90 73 37	Disassembling and assembling hand-held transmitter	90 - 11

91 Radio, Telephone, On-Board Computer

91 55 23	Retrofitting a D-Net telephone system	91 - 1
91 20 01	Check list of possible faults on the Porsche Autoradio CR 10	91 - 7
91 60 23	Retrofitting of a CD changer	91 - 11

92 Windshield Wipers and Washer

92 00 19	Removing and installing windshield wiper system	92 - 1
92 00 19	Removing and installing windshield washer system	92 - 5
92 00 19	Removing and installing headlight washer system	92 - 9
92 00 19	Removing and installing rear window wiper	92 - 13
92 15 19	Removing and installing wiper motor (with A/C system)	92 - 17
92 15 19	Removing and installing wiper motor (without A/C system)	92 - 21

94 Lamps, Lights, Exterior Switches

94 15 19	Removing and installing main headlight mountings	94 - 1
94 23 19	Removing and installing gas discharge lamp (Litronic headlights)	94 - 3
94 15 01	Litronic headlight (dipped beam): troubleshooting	94 - 5

Survey of contents of Service Information Technik '95

The Service Information gives a detailed description of the technical features of the new 911 Carrera.

	Rep. Gr.	Page
Engine		
General		1 - 1
Engine cross-sections	10	1 - 4
Full-load curve		1 - 6
Belt pulley	13	1 - 8
Pistons	13	1 - 10
Hydraulic valve lash adjuster	15	1 - 16
Setting the timing	15	1 - 18
USA - auxiliary air pump		1 - 19
Fuel and ignition systems		
General		2 - 1
DME - Schematic	24	2 - 2
Fuel - air flow	24	2 - 3
Exhaust gas flow	26	2 - 5
DME control unit 2.10.1	24	2 - 9
Mass air flow sensor	24	2 - 12
Throttle potentiometer	24	2 - 18
Ignition system	28	2 - 24
Plausibility test		2 - 28
Diagnosis		2 - 29
Auxiliary air pump	26	2 - 33
Power transmission		
Transmission	30	3 - 1
Clutch	30	3 - 2
Manual transmission	34	3 - 3
Transmission ratios		3 - 6
Gear set	35	3 - 8
Synchromesh	35	3 - 9
Final drive	39	3 - 13
Oil supply		3 - 15
Porsche Tiptronic	37	3 - 16
Modifications for the '95 model year		3 - 17

	Rep. Gr.	Page
Running gear		
General		4 - 1
Front axle	40	4 - 2
Steering	48	4 - 7
Rear axle	42	4 - 8
Elasto-kinematic toe correction	42	4 - 12
Coil springs (layout)	42	4 - 13
Wheels, tires	44	4 - 15
Suspension alignment	44	4 - 17
Brakes	47	4 - 20
Bleeding the brakes	47	4 - 23
ABS 5	45	4 - 24
Operation of the ABD	45	4 - 30
Diagnosis ABS/ABD	45	4 - 34
Body		
General		5 - 1
Constructional dimensions	50	5 - 4
Aerodynamics and air ducting	50	5 - 8
Body equipment		
Body equipment		6 - 1
Color scheme as of 1995 model year	60	6 - 1
Windows	64	6 - 8
Airbag system	68	6 - 14
Body - interior trim		
Body - interior trim	70	7 - 1
Seats	72	7 - 5
Heating, air conditioning, ventilation		
Particle filter	85	8 - 1
Air ducting	80	8 - 3
Heating - air conditioning unit	85	8 - 5
Heating - air conditioning unit	87	8 - 6
Series resistor of rear blower	80	8 - 9

	Rep. Gr.	Page
Electrical system		
Instruments	90	9 - 1
Alarm system/central locking system	90	9 - 3
Heated rear window	64	9 - 6
Central Information System (Z I)	91	9 - 7
Radio "Alpine 7807"	91	9 - 10
Sound package, DSP-System	91	
Windshield wiper and washer system	92	
Headlights	94	
Front end light cluster	94	
Tail lights	94	
Engine compartment baseplate	97	
Wiring diagram		
Summary		
Maintenance		0 - 1
Number ranges		0 - 4
Technical data		0 - 5

8 Technical data of air conditioning system

Compressor model 10 PA 15 C

Refrigerant charge 840 g refrigerant **R 134a**

Refrigerant oil in compressor 140 ± 20 cm^3 ND 8

Tightening torques for refrigerant lines

Thread outer dia.	TPI	Tightening torques in Nm
5/8"	18 UNF	17 ± 3
3/4"	16 UNF	24 ± 4
7/8"	14 UNF	33 ± 4

Hex bolts at	Thread	Tightening torques in Nm
Expansion valve	M 5	6
Expansion valve	M 6	9
Compressor	M 8	28

Note

When fitting the refrigerant lines, apply some refrigerant oil to the bolt unions and the O-rings.

Dispose of the refrigerant oil as **hazardous waste**.

80 59 01 Checking ballast resistor of rear blower

Note

The ballast resistor is fitted with a restart lock-out device. This restart lockout may be by-passed if the 1st stage of the rear blower should fail (2nd stage of rear blower operates continuously).

1. Take out ballast resistor.

2. Press down spring plate with a needle or a similar tool. This causes the contact tongue to snap back into its initial position.

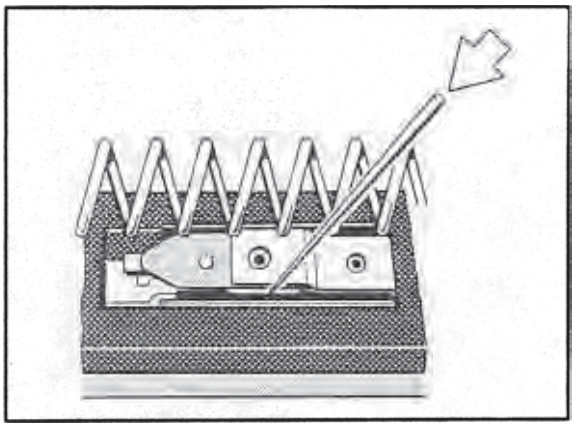

200-80

3. Replace the ballast resistor if the contacts are burnt.

80 18 19 Removing and installing rear heater blower

Removal

1. Remove intercooler. Pull vacuum hose and connector off the switchover valve. Undo fastening screws from fresh air housing and take out fresh air housing.

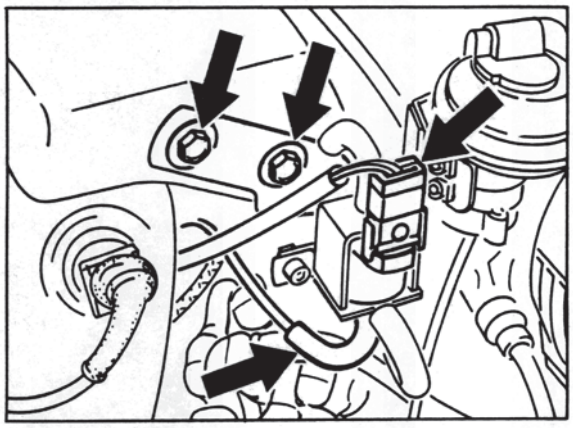

2027-10

2. Remove hose clamps and tie-wraps from heating air elbow and pull off rubber boot. Disconnect connector from rear heater blower and undo fastening screws (2 screws).

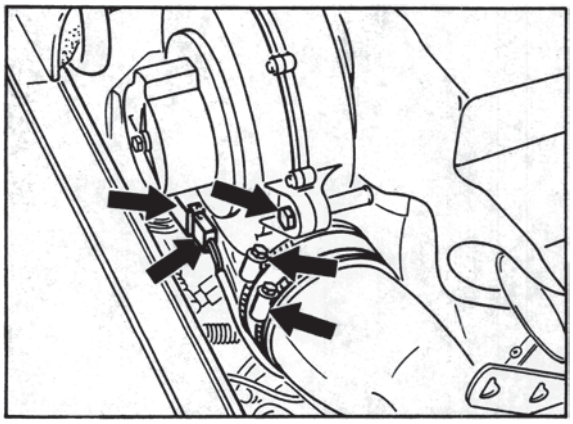

2073-80

3. Pull rear heater blower out of support in rearward direction and take out blower.

Installation

Check for correct seating of hose connections and hose clamps on heater air elbow.

85 16 15 Adjusting the flaps of the heater/ A/C unit

Adjusting the defroster center nozzle flap

1. Set motor to "Defroster closed" end position: Apply a voltage of 12 volts to pin 4 (positive) and pin 5 (negative) using two jumper leads until the motor is positioned in the end position.

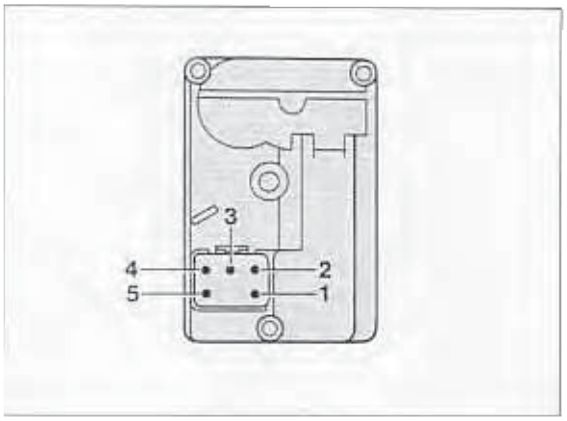

256-87

2. Press defroster center nozzle flap into "Defroster nozzle closed" position (upper outlet closed).

3. Assemble motor drive with flap link and lock assembly.

Adjusting the footwell flaps

1. Set motor to "Footwell flaps closed" end position: apply a voltage of 12 volts to pin 4 (negative) and pin 5 (positive) using two jumper leads until the motor is positioned in the end position. The drive lever now points towards the fresh air inlet.

2. Set both footwell flaps to closed position. Engage linkage with lever and locate with clamp.

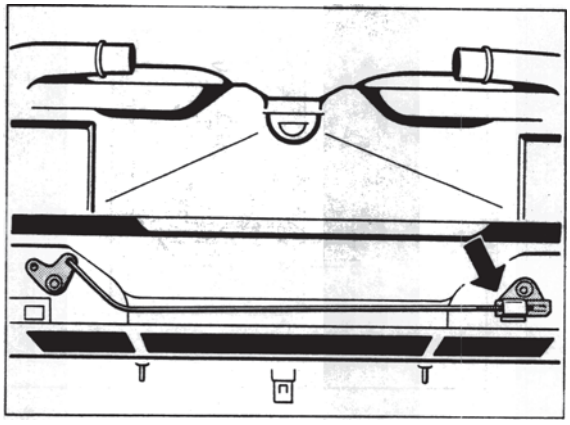

258-87

85 51 15 Adjusting the temperature mixing valves

Note

The temperature mixing vales are located below the instrument panel in the driver and passenger footwells.

1. Set engine to "temperature mixing valves closed" end position: Use two jump leads to apply 12 volts to pin 4 (positive) and pin 5 (negative) until the motor is in the end position.

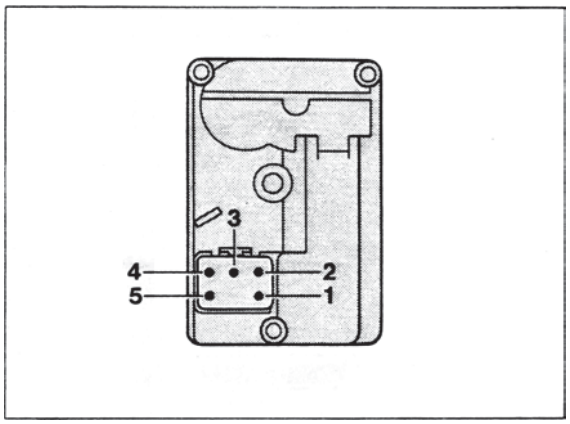

256-87

2. If the temperature mixing valve is not closed, undo the motor mount. Slide the motor in the slots until the temperature mixing valve is set in the closed end position.

85 30 19 Removing and installing heater fresh air blower motors

Tools

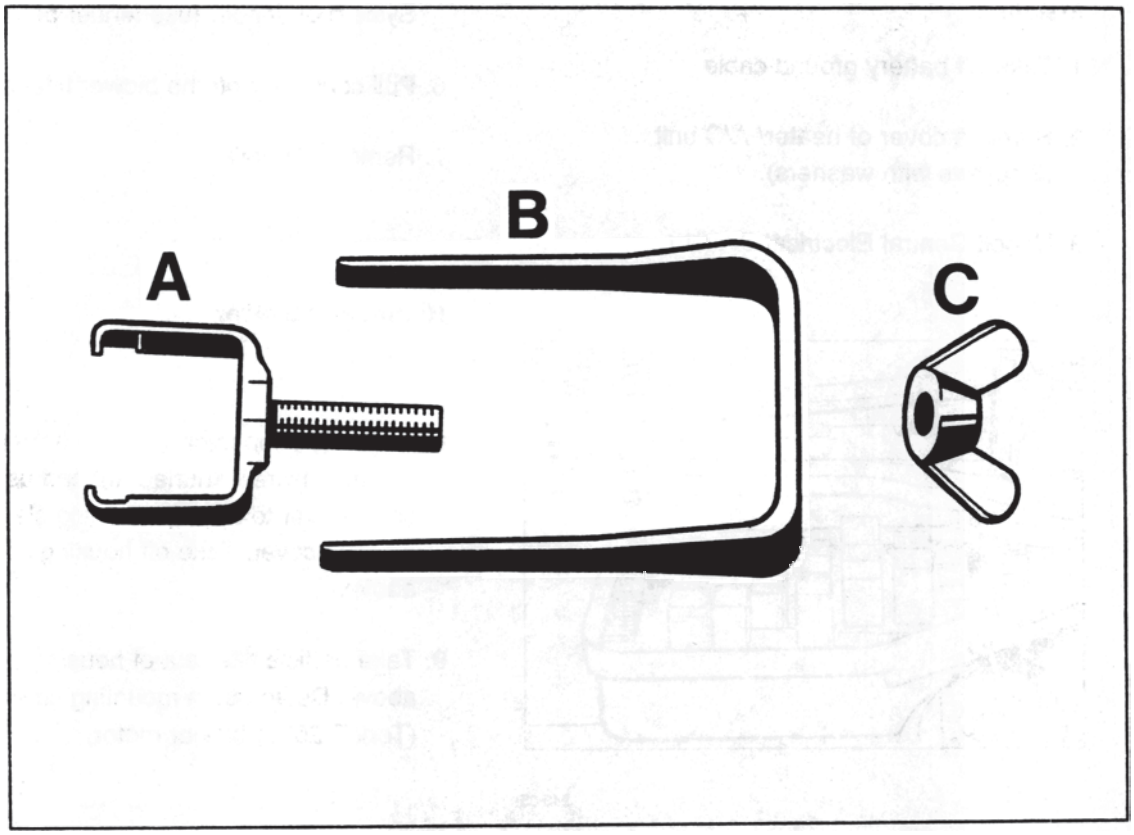

No.	Designation	Special tool	Order number	Explanation
	Puller assembly	9512	000.721.951.20	3 parts

85 30 19 Removing and installing heater fresh air blower motors

Removing and installing heater fresh air blower motors with the heater/ A/C unit installed

1. Take off battery ground cable.

2. Remove cover of heater/ A/C unit (2 screws with washers).

3. Unbolt Central Electrical System.

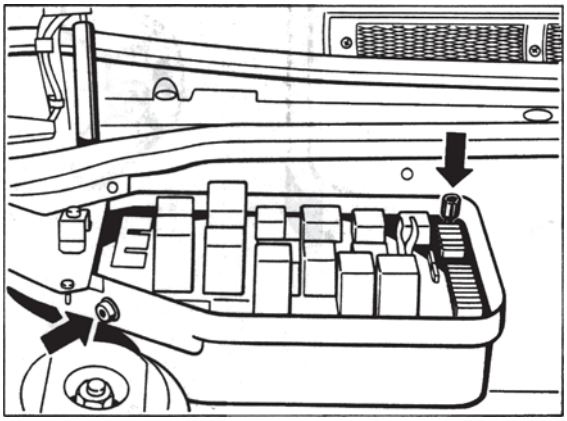

240-85

4. Remove wiring harness cover.

241-85

5. Disconnect electrical connector from blower housing cover and place Central Electrical System on fender (use fender protectors).

6. Pull connector off the blower final stage.

7. Remove firewall.

Right-hand blower

8. Separate connector and wire from housing cover. Unscrew knurled nut and use a screwdriver to detach retaining clamp from housing cover. Take off housing cover from above.

9. Take particle filter out of housing duct from above. Detach both mounting screws (Torx T 20) of blower motor.

10. Place part A of Special Tool 9512 onto shaft and turn right.
    Make sure the cutouts in the blower wheel line up with the cutouts in the blower housing.

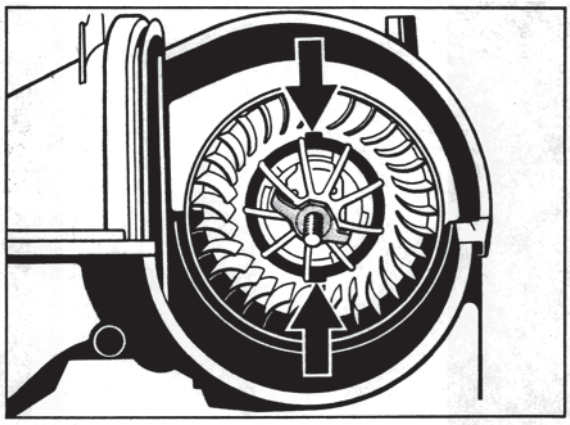

265-85

Note

Note the installation position for part A of special tool 9512. The hole for the fan wheel shaft is out of center (2 mm).

11. Push part B into the cutouts.

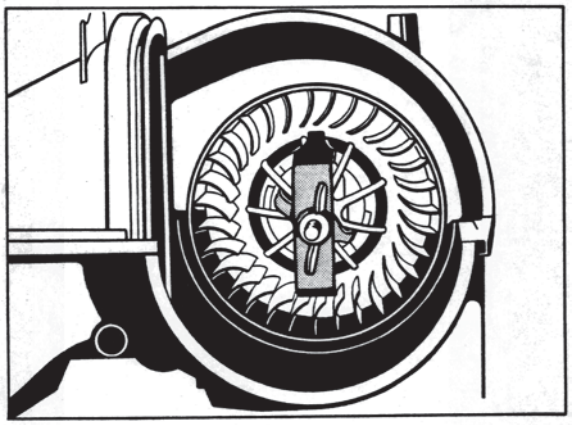

266-85

12. Tighten wing screw (part C) until the blower motor disengages.

13. Pull off connecting wire.

Left-hand blower

14. Detach reservoir from tank.

15. Pull wire off the housing cover. Screw out knurled nut and use a screwdriver to detach retaining clamp from housing cover. Take off housing cover from above.

16. For further steps, proceed as per items 9 to 13 above.

Note

When installing the motor, make sure the blower motor engages correctly and the connection wires are not squeezed.

Check if the blower wheel rotates freely.

Printed in Germany - 12. 19955

87 Pressure and temperature specifications

Refrigerant R 134 a

General test requirements:

- V-belt tensioned correctly.
- Solenoid clutch is energized.
- Condenser is clean.
- Sunroof, doors and windows closed.

1. Switch on air conditioner.
2. Set temperature control to max. cooling.
3. Set fresh-air blower to stage 4.

The pressures and temperatures specified in the below diagrams must be reached after approx. 10 mins. operation time at a speed of 2,000 rpm with the compressor switched on.

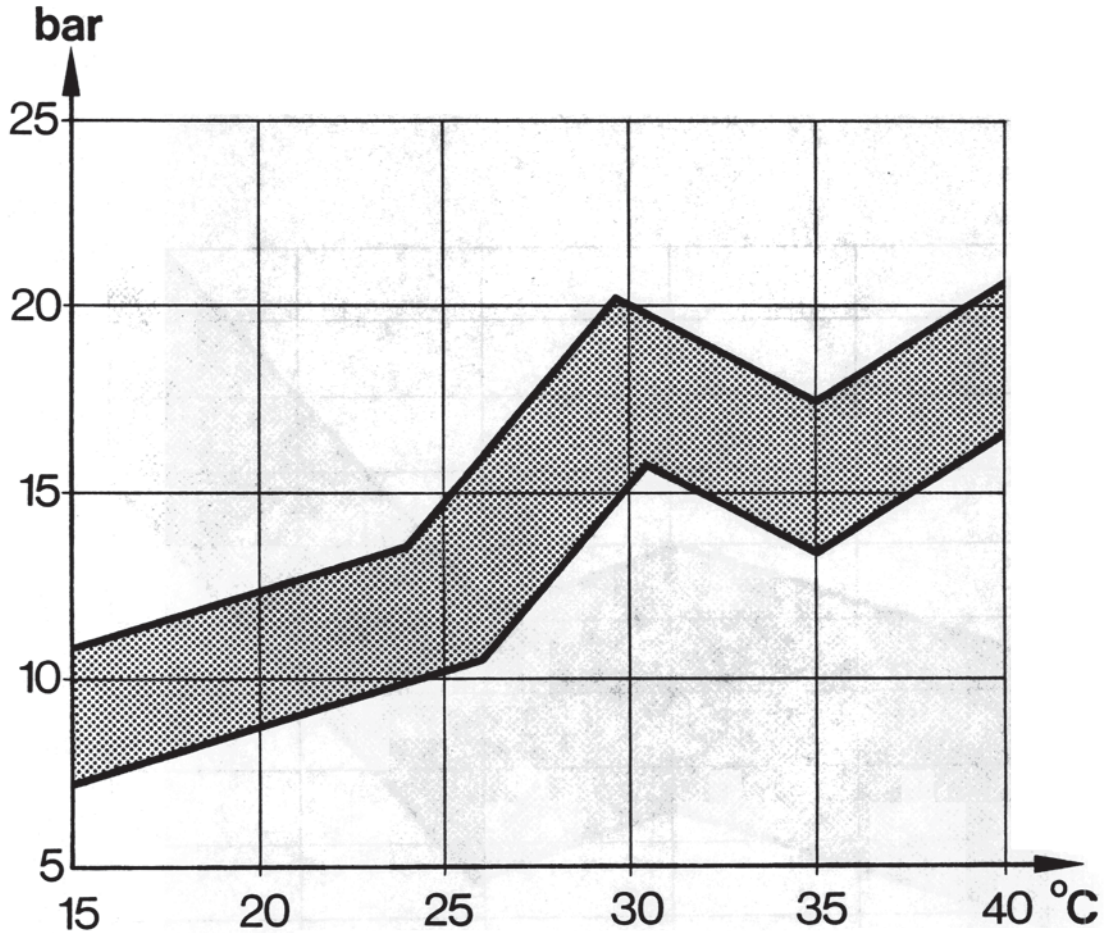

High pressure in refrigerant circuit vs. ambient temperature

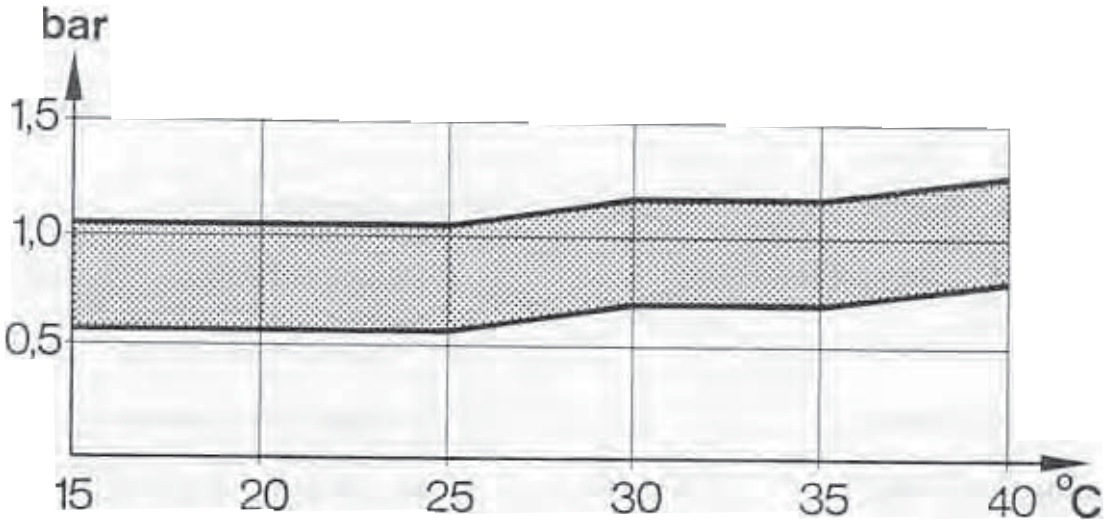

1356-87

Low pressure in refrigerant circuit vs. ambient temperature

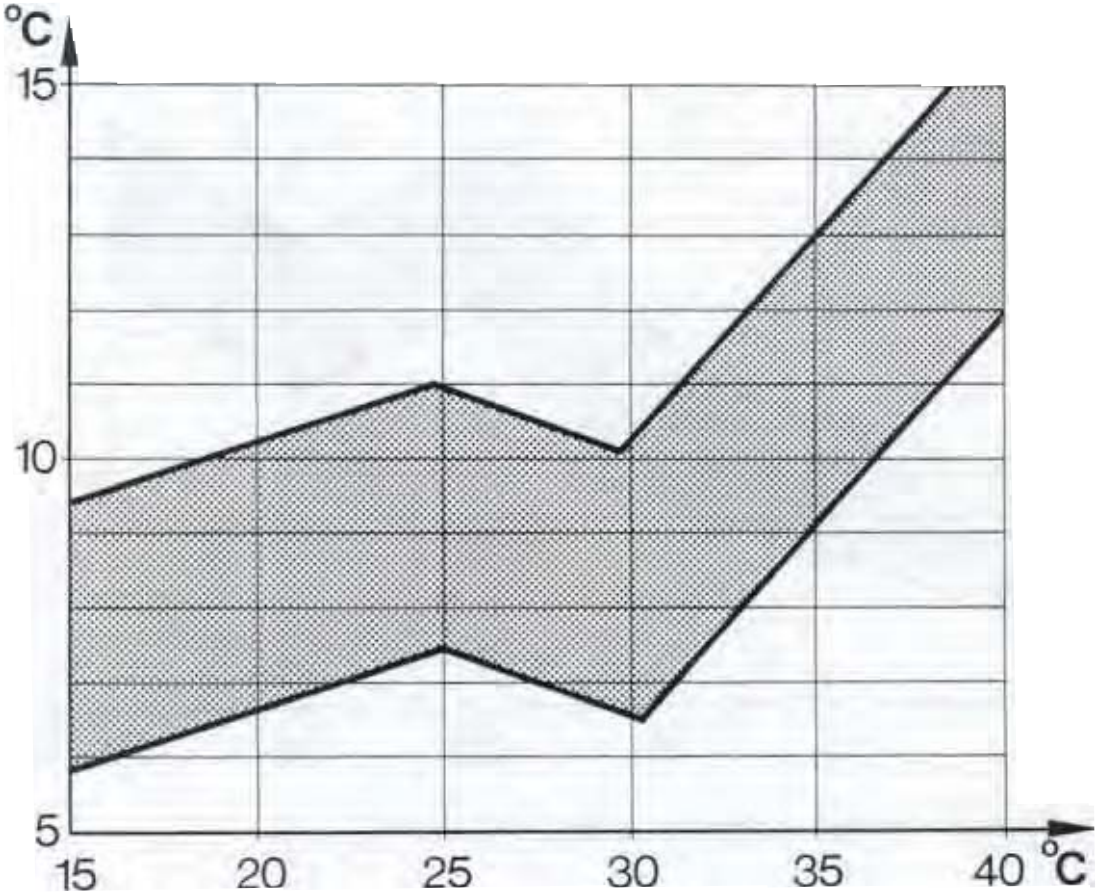

Air temperature at center nozzle vs. ambient temperature

87 01 19 Dismantling and assembling heater/ A/C unit

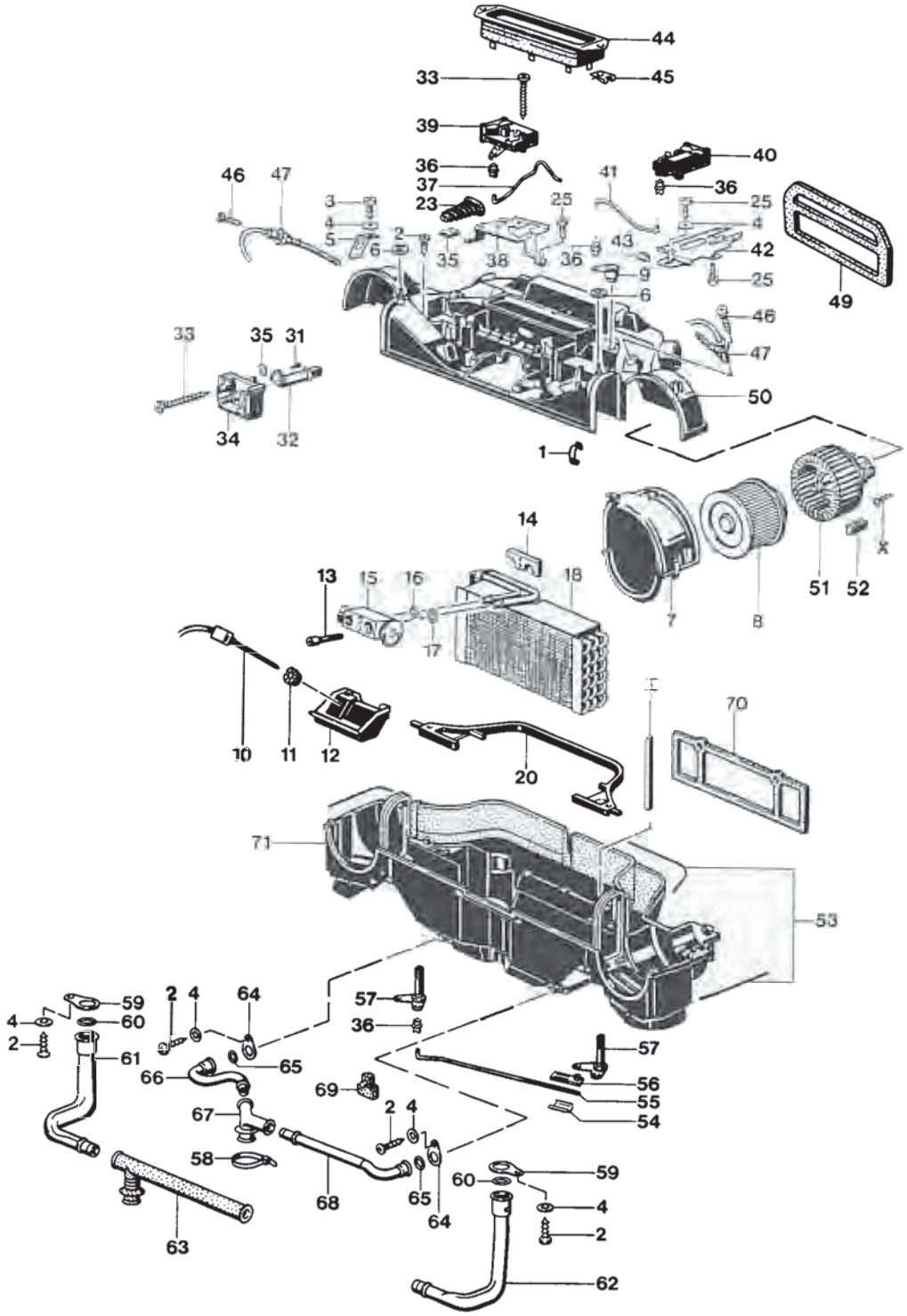

No.	Designation	Qty.	Note: Removal	Note: Installation
1	Tensioning spring	32		
2	Screw	11		
3	Screw	9		
4	Washer	6		
5	Bracket	1		
6	Knurled nut	2		
7	Housing cover LH	1		
	Housing cover RH	1		
8	Particle filter LH	1		
	Particle filter RH	1		
9	Lever	1		
10	Evaporator temperature sensor	1	Built into wiring harness	Built into wiring harness
11	Grommet	1		
12	Cover			
13	Hexagon socket head screw M 5	2		
14	Retaining plate	1		
15	Expansion valve	1		
16	Gasket	1		Replace. Apply a thin coat of refrigerant oil.
17	Gasket	1		Replace. Apply a thin coat of refrigerant oil.
18	Evaporator	1	Do not damage fins	Do not damage fins
19	Link	1		
20	Gasket	1		
21	Deleted			
22	Deleted			

No.	Designation	Qty.	Note: Removal	Note: Installation
23	Bellows	1		
24	Deleted			
25	Screw	5		
26	Deleted			
27	Deleted (Temperature mixing flaps are located below the instrument panel in the driver and passenger footwells)			
28	Deleted			
29	Deleted			
30	Deleted			
31	Screw	1		
32	Joint	1		
33	Screw	4		
34	Motor for defroster or center nozzle	1		For adjustment, refer to page 85-1
35	Sheetmetal nut	4		
36	Linkage clip	5		
37	Linkage	1		
38	Bracket	1		
39	Motor for fresh-air flap	1		
40	Motor for footwell flaps	1		For adjustment, refer to page 85-1
41	Linkage	1		
42	Bracket	1		
43	Retaining clamp	3		
44	Sheetmetal frame with rubber bellows	1		
45	Sheetmetal nut	2		

No.	Designation	Qty.	Note: Removal	Note: Installation
46	Screw	2		
47	Temperature sensor, mixing chamber	2	Built into wiring harness	Built into wiring harness
48	Deleted			
49	Gasket	1		
50	Housing upper section	1		
51	Blower LH			White plastic
	Blower RH	1		Black pastic
X	Screw (Torx T 20)	4		
52	Rubber mount	8		
53	Sealing ring	1		
54	Retaining clamp	1		
55	Linkage	1		
56	Lever	1		
57	Drive	2		
58	Tie-wrap	2		
59	Bracket	2		
60	Sealing ring	2		
61	Water drain tube	1		
62	Water drain tube	1		
63	Spacer	1		
64	Bracket	2		
65	Seal	2		
66	Water drain tube	1		
67	Bracket	1		
68	Water drain tube	1		
69	Rubber mount	1		
70	Gasket	1		
71	Housing lower section	1		

Modifications to heater / A/C unit from model year '95

Electrically controlled bypass air flaps

A solenoid valve controls the vacuum capsule of the bypass air flaps. The solenoid valve is mounted on the right of the heater / A/C unit.

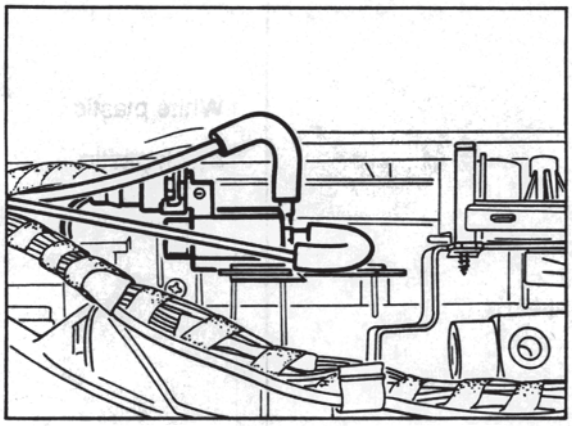

2181-87

As a spare part, the vacuum capsule with bypass air flaps is only available as a complete unit. If you need to remove the vacuum capsule with bypass air flaps, the heater / A/C unit must first be emptied and removed.

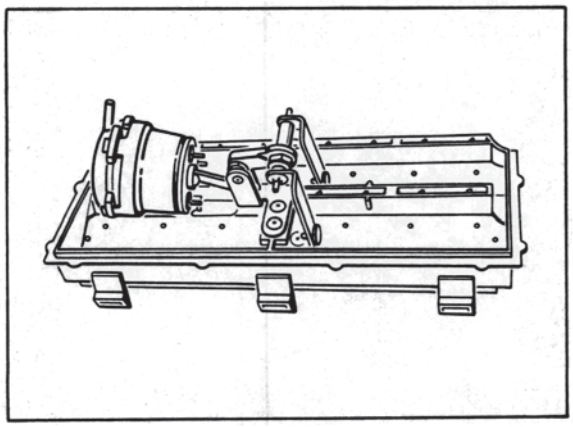

2182-87

87 02 19 Removing and installing heating and air conditioning control

Note

Use Special Tool V 160 (this code also is the Part No.) to remove the heating and air conditioning control.
Supplier: Matra Werke GmbH
Dieselstrasse 30 - 40
D-60314 Frankfurt

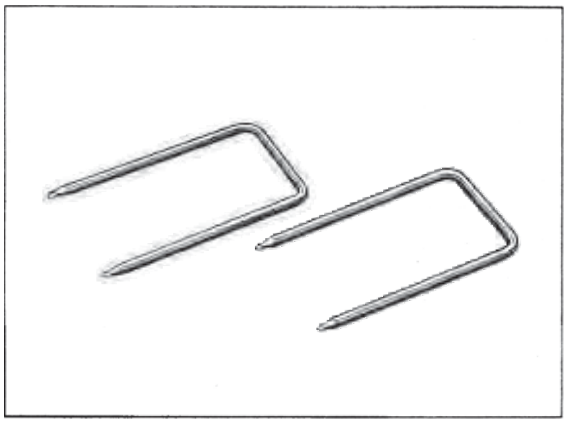

254-87

1. Insert and engage Special Tool in cutout provided in the heating and air conditioning control.

2. Push out heating and air conditioning control manually from below towards the rear.

3. Disengage 25-pin and 35-pin connector.

87 83 19 Removing and installing A/C system pressure switch

Removal

1. Draw off refrigerant charge with service equipment.

2. Remove cover of heater/ A/C unit (2 screws with washers).

3. Pull off connector at pressure switch.

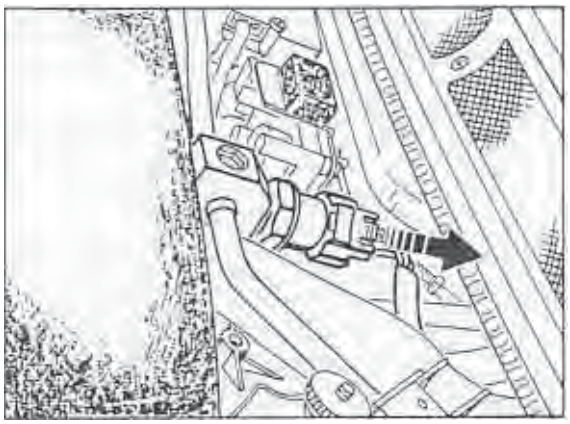

1796-87

4. Loosen and screw out pressure switch.

Installation

5. Replace O-ring at pressure switch and coat lightly with refrigerant oil.
   Tightening torque: 3 Nm (2 ftlb.)

87 03 Safety instructions for handling refrigerant R 134 a

The refrigerant R 134a used in this system is specified as a safety refrigerant. This means that this refrigerant is inflammable, non-explosive, non-toxic, non-irritating, odorless and tasteless. The following precautions should nevertheless be observed.

1. Avoid any contact with liquid or gaseous refrigerant. Treat all skin areas affected as in the case of frostbite; rinse with cold water immediately and consult a doctor. Wear goggles to protect your eyes. Consult a doctor immediately if refrigerant gets into your eyes. Wear protective gloves to protect your hands.

2. When repairing the A/C system, drain the system and clean the refrigerant. Even non-chlorine refrigerants must never be released into the atmosphere and must be disposed of correctly.
   Due to the differing chemical composition, different types of refrigerant must never be mixed with each other (not even in small quantities).

3. Never perform welding operations on parts of the closed A/C system or in their immediate vicinity. Heating generates excessive pressure regardless of whether the system is filled with refrigerant or not and may cause system damage or even explosions. R 134 a is completely non-toxic at normal temperatures but will decompose if it gets into contact with flames or if it is exposed to high temperatures.

4. Do not throw refrigerant bottles and do not expose filled bottles to direct sunlight or other heat sources for longer periods of time. The maximum admissible temperature of a filled refrigerant bottle must not exceed 45 °C.

87 03 17 Servicing the A/C system

Service equipment SECU 134

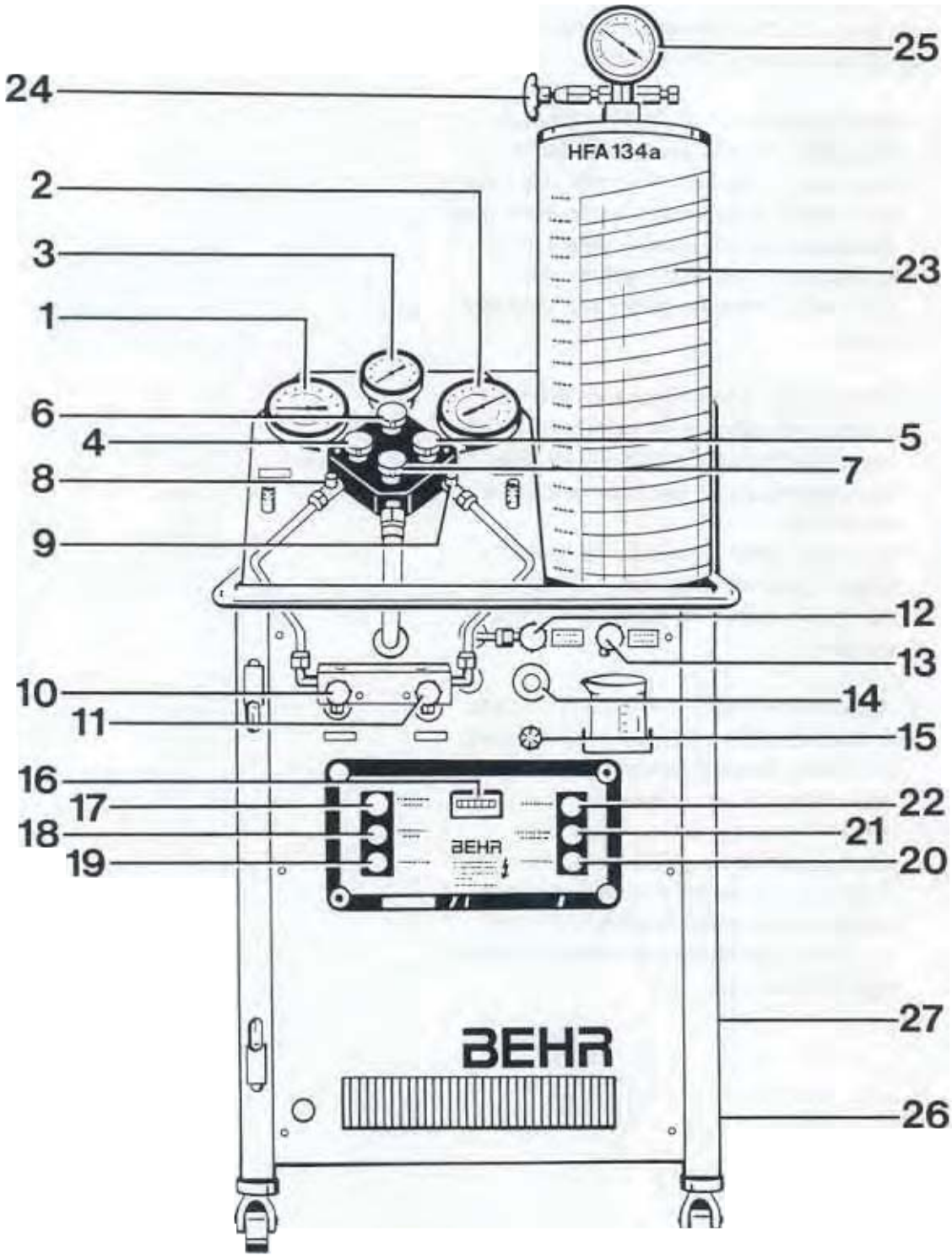

1 - Low-pressure gauge

2 - High-pressure gauge

3 - Torr gauge

4 - Low-pressure shutoff valve (blue)

5 - High-pressure shutoff valve (red)

6 - Torr gauge shutoff valve (black)

7 - Vacuum pump shutoff valve (yellow)

8 - Low-pressure fitting

9 - High-pressure fitting

10 - Shutoff valve for refrigerant inlet

11 - Shutoff valve for refrigerant outlet

12 - Shutoff valve for refrigerant oil inlet

13 - Refrigerant oil drain valve

14 - Humidity indicator

15 - Vacuum oil tank fitting

16 - Operating hours gauge

17 - SUCTION FINISH (ABSAUGEN ENDE) warning lamp

18 - SUCTION/PURGE (ABSAUGEN/ REINIGEN) pressure switch

19 - ON/OFF main switch

20 - HEATING (HEIZUNG) pressure switch

21 FAULT (STÖRUNG) warning lamp

22 - VACUUM PUMP (VAKUUMPUMPE) pressure switch

23 - Filling cylinder with weight scales

24 - Filling cylinder shutoff valve

25 - Filling cylinder high-pressure gauge

26 - Refrigerant oil inlet flange

27 - Refrigerant oil accumulator inspection glass

Note

Observe manufacturer's operating instructions or repair instructions when working on the service equipment.

Assembly operations that require opening the refrigerant system

The system contents must be disposed of properly after all operations on the A/C system that require opening the refrigerant system. Make sure the relevant safety regulations are observed.

To keep dirt and humidity out of the A/C line system, be careful to ensure absolute cleanliness whenever working on the system. Never clean any parts of the system with hot steam. Use only nitrogen for cleaning.

When replacing a component, plug all openings with suitable plugs.

Never use refrigerant R 12 to fill or top up an A/C system designed for R 134 a, not even vice-versa (this is due to the different components and refrigerant oils used).

General sequence of assembly:

1. Draw off refrigerant.
2. Remove failed component.
3. Evacuate.
4. Check system for tightness.
5. Flush with refrigerant.
6. Draw off system contents once more.
7. Evacuate.
8. Fill.

Note

Check seals when disconnecting or reconnecting hose connections.

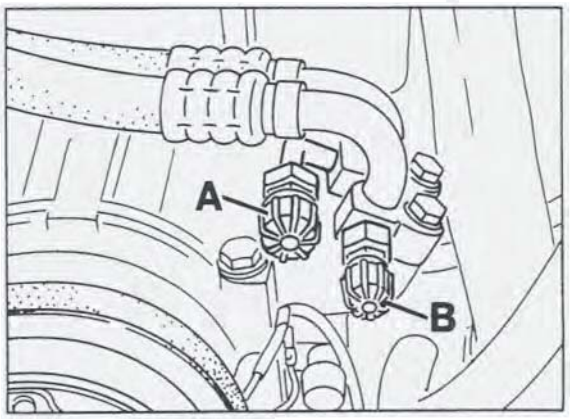

1790-87

A - High pressure
B - Low pressure

Drawing off refrigerant and cleaning system

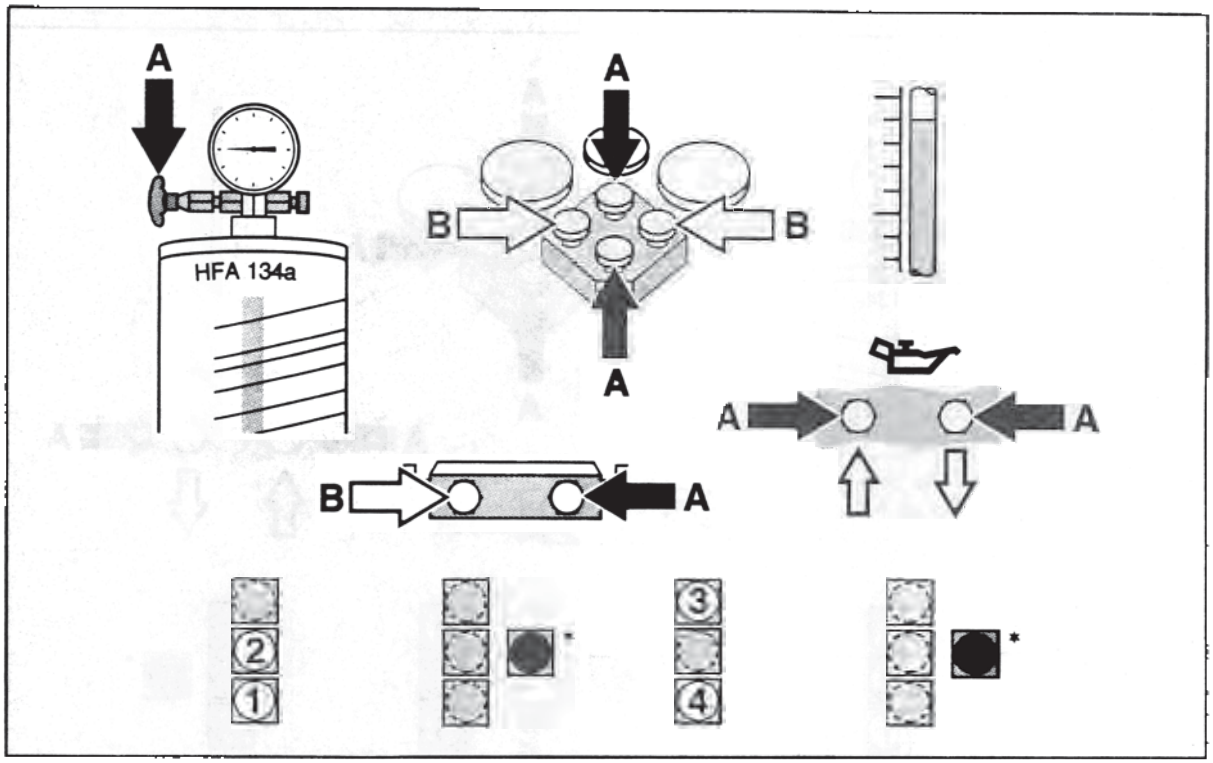

Note

Close all valves before each step.

A - Close B - Open

Drawing off: Start	End
1 - ON / OFF	3 - SUCTION / END
2 - SUCTION / PURGE	4 - ON / OFF

* Pressure too high / filling cylinder full.
Drain refrigerant from filling cylinder into refrigerant bottle (approx. 50 %).

Cleaning refrigerant

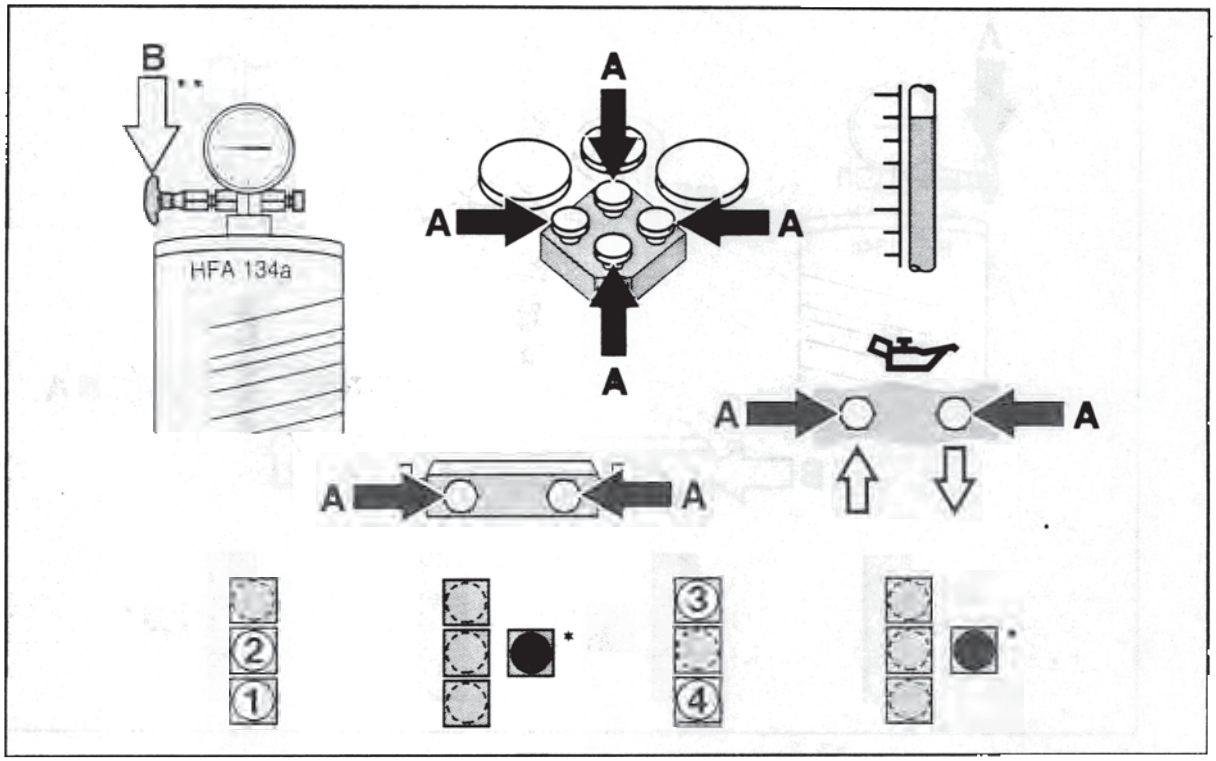

A - Close B - Open

Cleaning: Start

1 - ON / OFF
2 - SUCTION / PURGE

End

3 - PURGE / END
4 - ON / OFF

Pressure too high / filling cylinder full.

OPEN one turn. CLOSE after approx. 15 minutes.

Draining old refrigerant oil

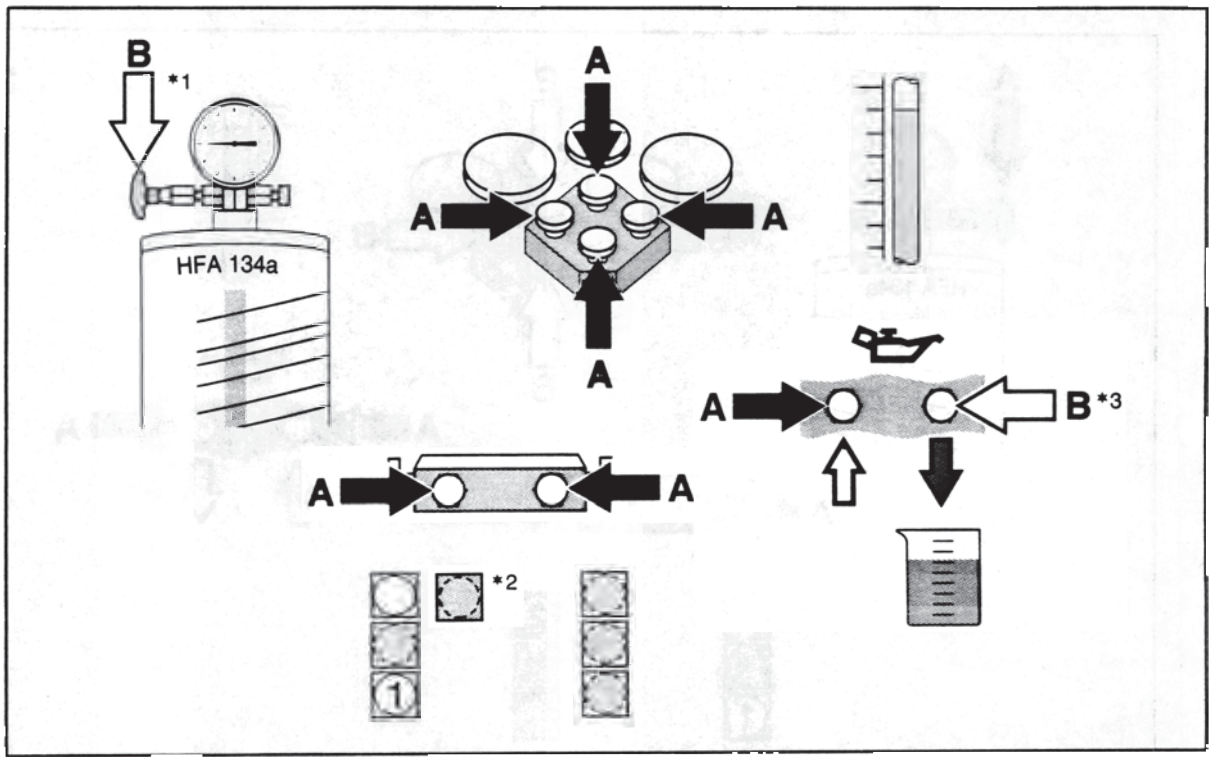

A - Close B - Open

1 - ON / OFF

Instructions

* 1 open until *2 OFF, then *1 CLOSED and 3* OPEN.

Evacuating

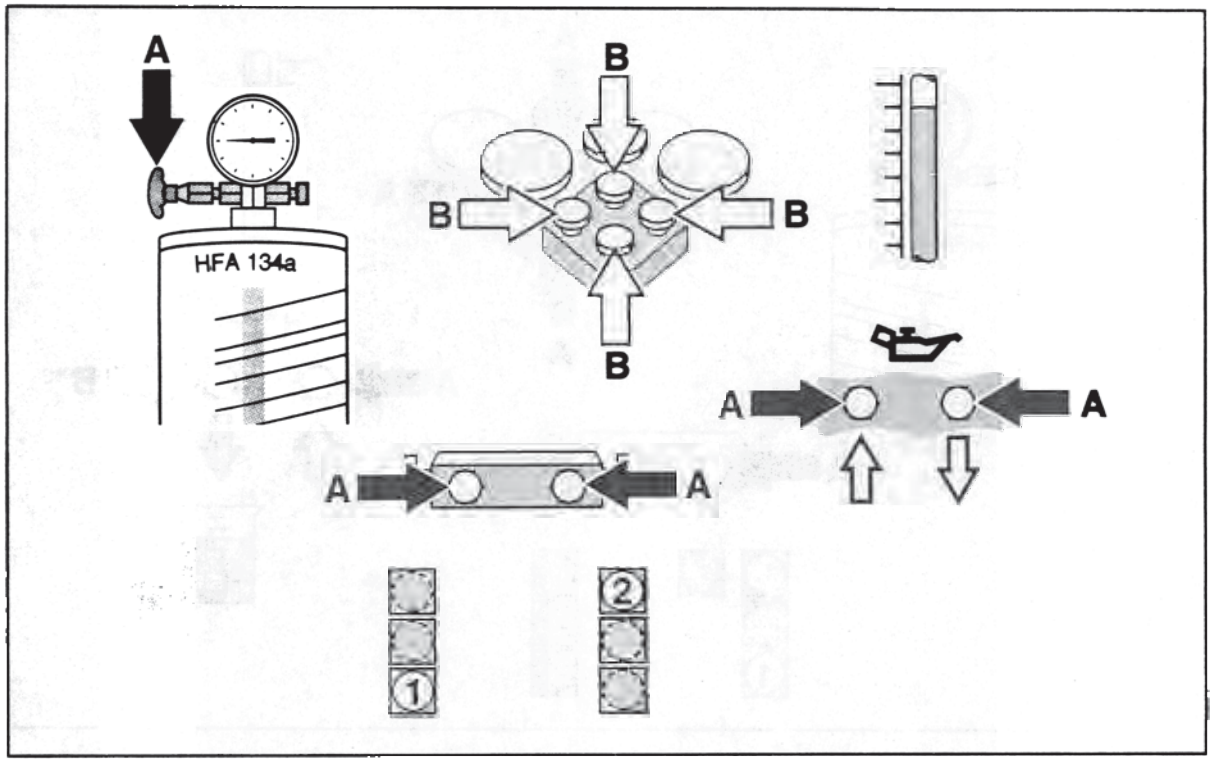

A - Close B - Open

1 - ON / OFF
2 - VACUUM PUMP

Minimum evacuating time: 15 minutes.

Topping up with new refrigerant oil

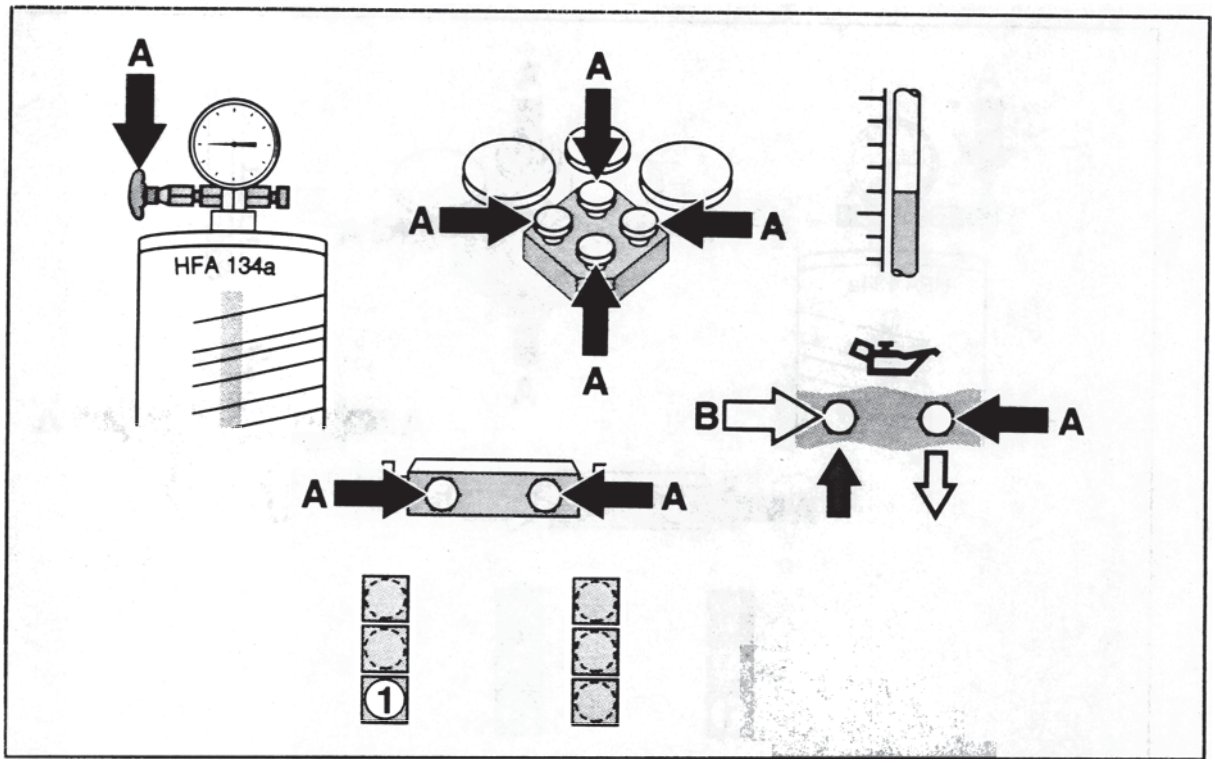

A - Close B - Open

1 - ON / OFF

Filling from high-pressure side

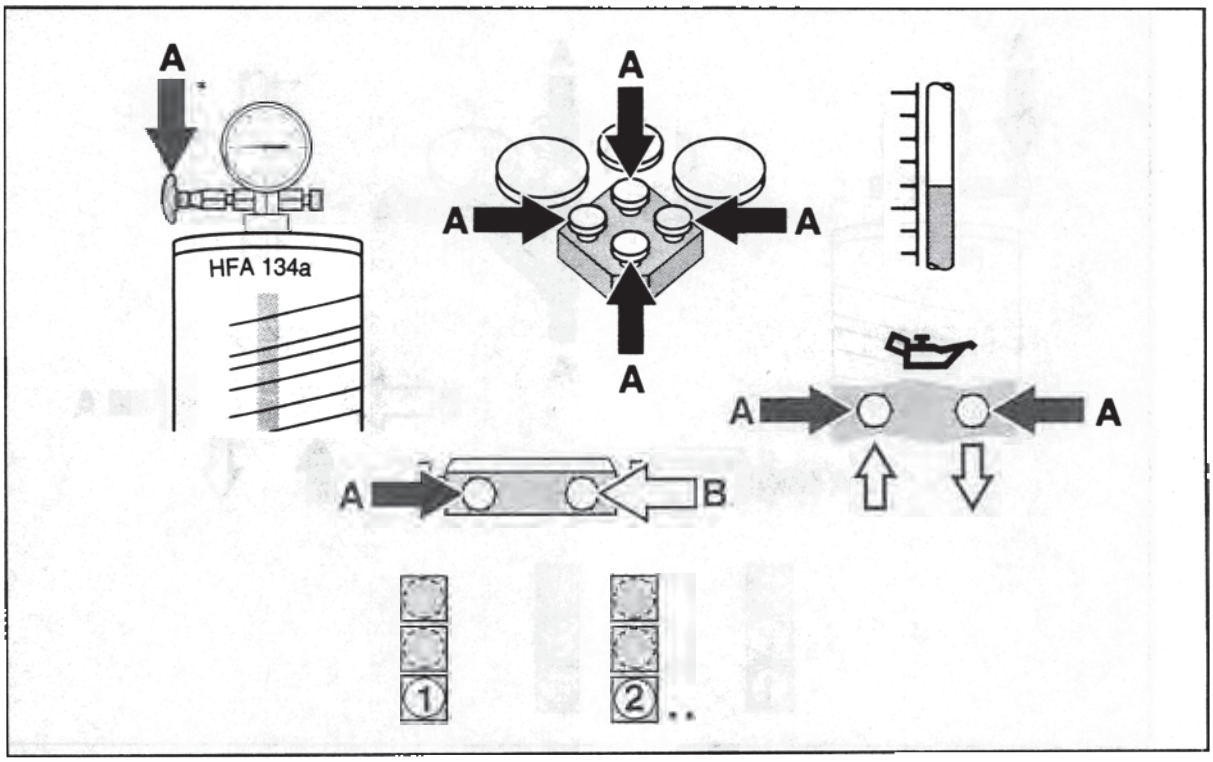

A - Close B - Open

1 - ON/OFF
2 - HEATING

* Pressure: 8 to 10 bar.

** If pressure is below 8 bar.

Draw off internally after using the SECU (page 87-17).
Close manual valves on both hose lines first.

Refilling A/C unit

Note

The A/C unit is no longer fitted with an inspection glass for refrigerant level. If the unit develops insufficient cooling power, the refrigerant must be removed, the specified refrigerant volume filled in and the unit tested for tightness.

1. Remove refrigerant using service unit.

2. Determine refrigerant oil concentration in removed refrigerant.

3. Fill in new refrigerant oil.

4. Evacuate.

5. Fill in specified volume of refrigerant.

6. Check system for tightness.

Distribution of oil quantity in refrigeration circuit

Total oil quantity	**140 ± 20 cc**

After the system contents have been drawn off, the following oil quanitites remain in the system:

Condenser	approx. **20 cc**
Evaporator	approx. **30 cc**
Fluid reservoir including piping	approx. **10 cc**
Compressor	approx. **50 cc**
Oil quantity circulating in refrigeration circuit	approx. **40 cc**

Note

On **new vehicles,** the drawn-off oil quantity is approx. **15...20 cc**.
On **older vehicles,** this oil quantity is higher. The oil quantity drawn off must be added to the system again.

Refrigerant oil drawn off from an A/C unit that has already been operated must **not** be reused. When replacing a component, the oil quantity must be topped up by the amount remaining in the removed component.

When the A/C system is **depressurized,** the refrigerant oil circulating in the circuit (approx. **40 cc**) will be lost and must be added to the A/C system before filling up with refrigerant.

87 55 19 Removing and installing liquid tank

Removal

1. Remove refrigerant using service unit.

2. Remove rear wheel housing liner from front left fender.

3. Loosen hose clamp on liquid tank. Unscrew the two hexagon head screws on the liquid tank and lower the liquid tank out. Insert air-tight plugs in liquid lines immediately.

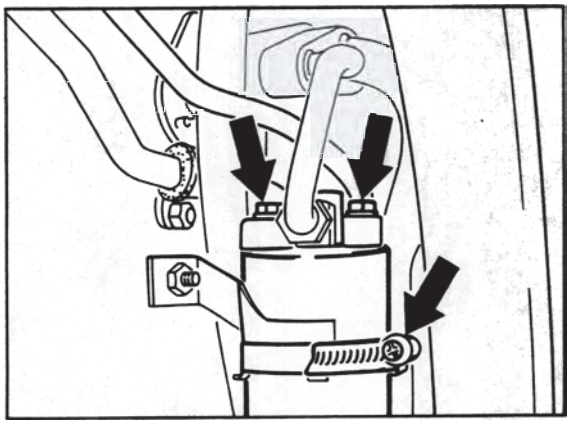

1897-87

Installation

1. Do not remove plugs until just before installation. Replace O-ring on branch piece and refrigerant line and wet O-ring with refrigerant oil.

2. Tighten the two hexagon head screws on the liquid tank to 10 Nm (7 ftlb.).

3. Determine refrigerant volume and top up with refrigerant oil **(volume drawn off + 10 cc).**

Note

The reservoir must be replaced if system malfunctions occur (e.g. due to accident damage or loss of air conditioning system pressure). The refrigerant sight glass has been deleted.

Refrigerant oil drawn off from an A/C system that has already been in operation must not be reused.

87 50 19 Removing and installing condenser

Removal

1. Use service unit to draw off refrigerant.

2. Unbolt and take off left front wheel.

3. Remove wheel housing liner and lower section of front spoiler.

4. Disconnect connector linking the ballast resistor to the condenser fan. Undo refrigerant pipes from condenser, using a suitable tool to lock.

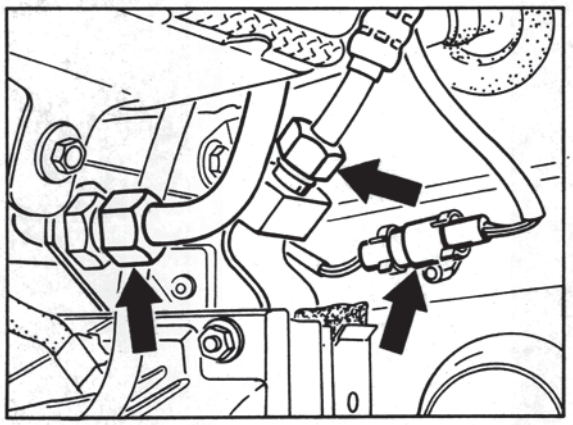

1898-87

5. Plug ports and pipes immediately with a suitable air-tight seal.

6. Pull off electrical connector from fan motor. Unclip headlight wire and vent hose.

7. Disconnect both headlight cleaner hoses from regulator valve. Detach condenser support bracket from lower body end and remove as a unit.

8. Undo self-tapping screws (4 ea.) from support bracket and pull out condenser from above.

Installation

1. Remove plugs inserted in pipes and condenser port only imediately before refitting components.

2. Replace O-rings and coat lightly with refrigerant oil.

3. **Tightening torques** for refrigerant pipes:
   5/8" - 18 UNF **17 ± 3 Nm (12.5 ± 2)**
   3/4" - 16 UNF **24 ± 4 Nm (18 ± 3)**

4. Determine refrigerant oil volume and refill with refrigerant oil (**drawn off volume + 20 cc**).

Note

Refrigerant oil drawn off from an A/C system that has already been operated must not be reused.

87 53 19 Removing and installing condenser fan

Removal

1. Remove lower front spoiler section on the left side.

2. Pull off electrical connector from fan motor. Unclip headlight wire and vent hose.

3. Pull both headlight washer hoses off the regulator valve. Remove fan bracket from condenser retaining bracket and take out from below.

4. Detach fan from retaining bracket and take off fan.

Note

Check after installation if fan is able to rotate freely.

87 01 19 Removing and installing heater / air conditioning unit

Removal

1. Take off battery ground cable.

2. Draw off refrigerant with service equipment.

3. Remove fuel tank.

4. Remove cover of heater/ A/C unit (old version is held in place by 2 bolts with washers, new version is fitted with spring clamp).

5. Remove Central Electrical System.

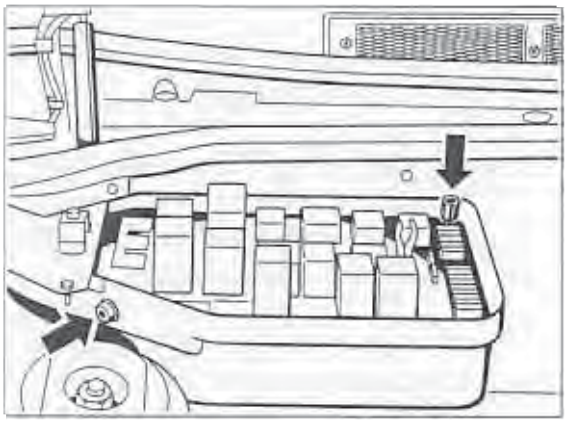

240-87

6. Remove wiring harness cover.

241-87

7. Detach electrical connector from fan housing cover and place Central Electrical System on fender (use fender protectors).

8. Detach wire connector from blower final stage.

9. Remove firewall.

10. Remove fresh-air cleaner grille.

11. Undo fastening screws.

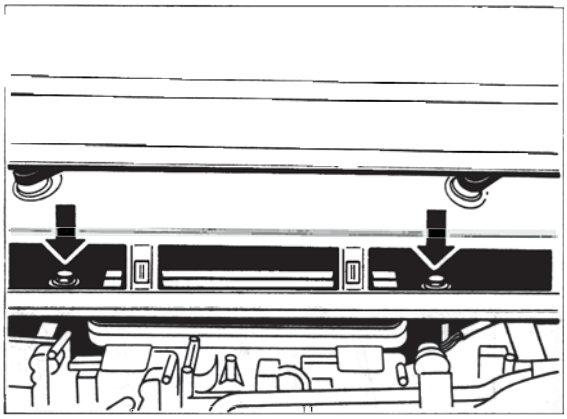

242-87

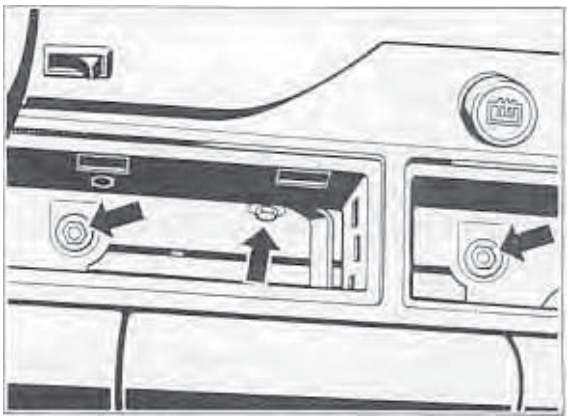

250-87

12. Disconnect air conditioning pipes from expansion valve. Plug ports and piping immediately with air-tight seals.

13. Pull off connector from pressure switch.

14. Detach A/C piping bracket and move A/C piping out of the way.

15. Pull off condensation water and water drain hoses (disconnect tie-wraps) and push rubber grommets forward.

16. Remove radio, heater/ A/C regulator and glove compartment. Pull off connector above glove compartment.

17. Undo fastening bolt and nuts.

18. Remove side panel and pull off right and left hot air induction flanges.

19. Pull off connector from servo motor for temperature mixing valves.

20. Separate wiring harness from heater/ A/C regulator (harness is tied to the passenger compartment wiring harness) and pull through to passenger side.

21. Start by removing heater/ A/C unit on right-hand side. Pull off air ducting to side nozzles and pull wiring harness along.

Installation

1. Detach spring clamp of left and right heater/ A/C unit (new version).

2. When re-installing, fit right-hand air guide before heater/ A/C unit is brought into installation position (for better accessibility). The left-hand air guide can be pushed in place with the heater/ A/C unit fitted after the large instrument cluster has been removed.

3. Replace O-ring for refrigerant pipes at expansion valve and coat lightly with refrigerant oil.

Note

Be sure to top up with refrigerant oil when replacing the heater/ A/C unit or the evaporator. Determine refrigerant oil volume and refill with refrigerant oil (**volume drawn off + 30 cc**). Refrigerant oil drawn off from an A/C system that has already been operated must not be reused.

87 34 19 Removing and installing compressor

Removal

1. Draw off refrigerant with service equipment.

2. Pull off wiring connector.

3. **Only slacken** compressor mounting bolts. Undo tensioning bolt lock nut and screw out tensioning bolt.

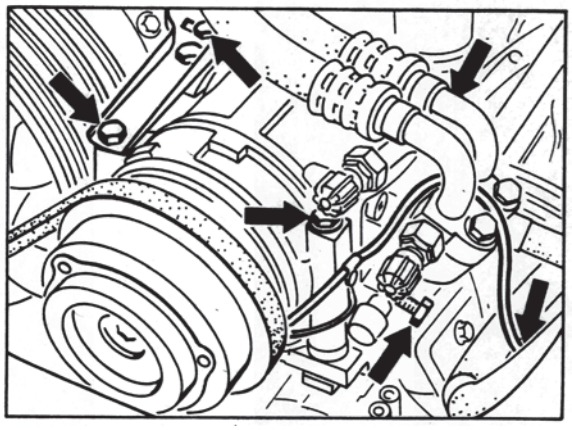

1477-87

4. Detach refrigerant pipes from compressor. Plug ports and piping immediately with air-tight seals.

5. Move compressor to the left and take off V-belt. Take out mounting bolts and take off compressor.

Installation

Note

New compressors are pressurized and are filled with the respective total oil quantity required for the refrigerant circuit. The oil quantity remaining in the individual components must therefore be taken into account.

1. Screw cap off the service valve and release pressure from compressor. Detach service valve from compressor (4 bolts) and take off valve.

2. Pour approx. **50 cc** of refrigerant oil from the compressor into a graduated measuring glass. The remaining oil quantity (approx. **90 cc**) remains in the compressor.

Note

Refrigerant oil drawn off from an A/C system that has already been operated must not be reused.

3. **Tightening torque** of compressor mounting bolts (M 8 x 125 bolts): **28 Nm (20.5)**

4. **Tightening torque** of refrigerant pipe (M 8 x 32 bolts): **23 Nm (17)**
   Replace all mounting bolts during each reassembly (micro-sealed bolts).
   Replace O-rings and coat lightly with refrigerant oil.

5. **Tightening torque** of service valve (4 bolts): **25 Nm**

6. Remove plugs from piping and compressor port only immediately before refitting.

87 27 19 Removing and installing magnetic clutch

Removal

1. Use a standard strap wrench to keep thrust plate from turning and undo mounting bolt.

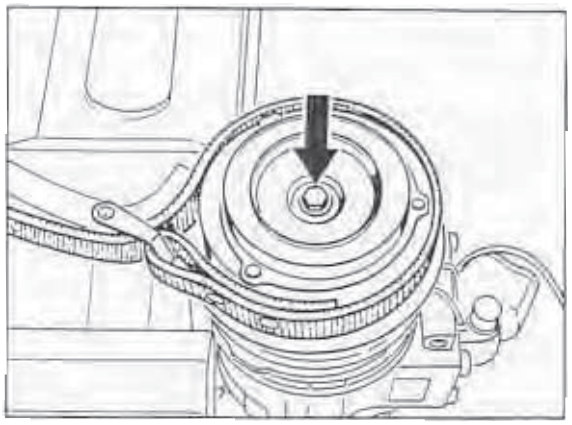

1927-87

2. Screw a M 8 bolt into the thrust plate threads until the thrust plate can be taken off by hand.

3. Take out spacers and remove circlip with a pair of standard circlip pliers. Pull off pulley manually.

4. Unscrew solenoid coil wire from compressor housing. Remove circlip. Take solenoid coil off the compressor housing.

Installation

1. Place solenoid coil into compressor housing. Lock pin must engage into the lock pin hole

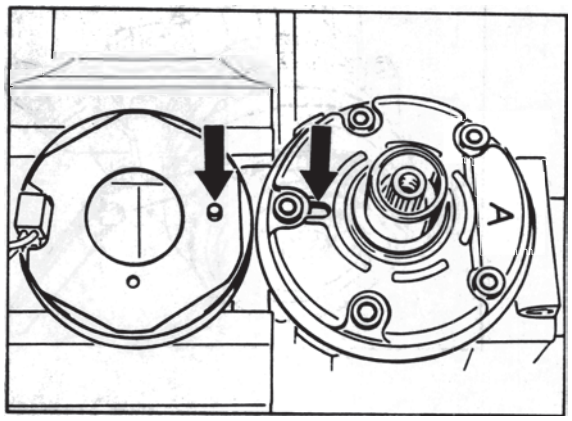

1928-87

2. Fit circlips. The chamfered face of the circlip points upward (towards mounting bolt).

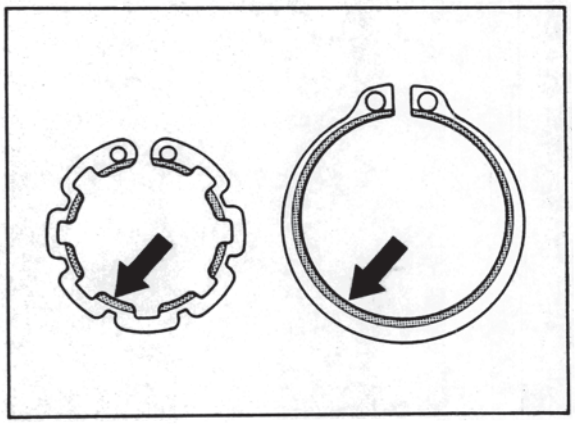

1930-87

3. Tighten thrust plate mounting bolt. **Tightening torque: 14 Nm (10)**

4. Use a feeler gauge set to check air gap between thrust plate and pulley.
   Air gap: 0.5 mm ± 0.15 mm

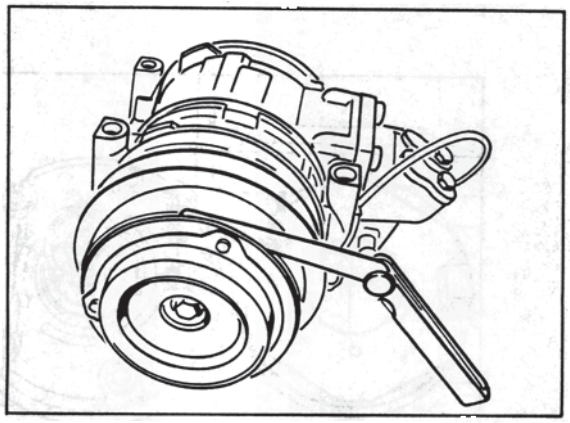

1929-87

If the air gap is outside the limits, adjust air gap by inserting or removing spacers.

87 70 19 Removing and installing expansion valve

Removal

Take off battery ground cable.

2. Draw off refrigerant with service equipment.

3. Remove heater/ A/C unit cover (old version is held in place by 2 bolts with washers, new version is fitted with spring clamp).

4. Remove Central Electrical System.

5. Remove wiring harness cover.

6. Detach electrical connector at fan housing cover and place Central Electrical System on fender (use fender protectors).

7. Detach connector from blower final stage.

8. Remove firewall.

9. Separate A/C piping from expansion valve. Plug ports and piping immediately with air-tight seals.

10. Undo and take out expansion valve. Plug piping to evaporator immediately with air-tight seals.

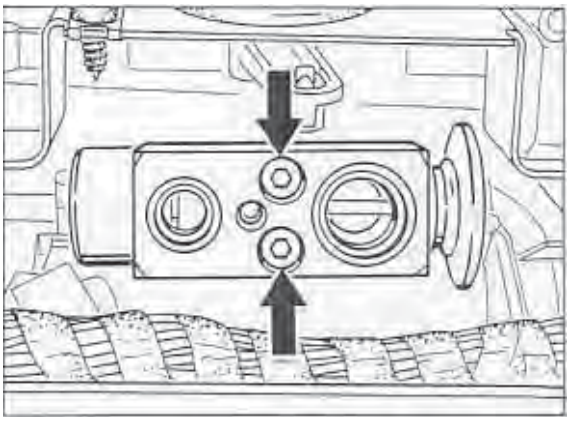

1966-87

Installation

Remove plugs only directly before refitting. Replace O-rings and coat lightly with refrigerant oil.

Refrigerant oil drawn off from an A/C system that has already been operated must not be reused.

Tightening torques:

M 5 bolt **6 Nm (4.5)**
M 6 bolt **9 Nm (6.6)**

90 73 Tuning model '94 remote control units

Vehicles with immobilizer M 530

Note

As a result of tolerances in the ignition lock, it is not possible to define precisely the position at which the buzzer contact is closed by the ignition key.
Depending on the tolerances, the buzzer contact(S) in the ignition lock

may be closed between positions 0 and I (Fig. A)

or

between positions I and II (Fig. B).

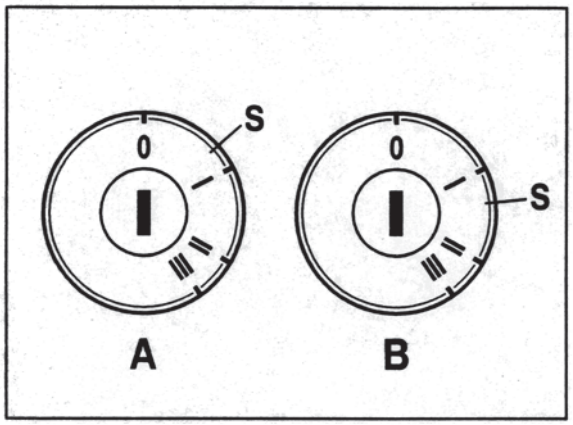

2213-90

I = terminal X (windshield wipers on)
II = terminal 15 (ignition on)
III = terminal 50 (starter)

When the key is removed from the ignition lock, the buzzer contact is opened (switched off). This signal is required for tuning the remote control units.

The position where the buzzer contact is operated can be located as follows.

Manual transmission vehicles.

The buzzer contact signal is transmitted via pin 12 in the 14-pin connector (passenger compartment wire harness, connector X4/1 under the left seat).

1. Remove the left seat. Do not unplug the connector; carefully remove the connector cover and connect a test lamp to pin 12 (red/black) and ground.

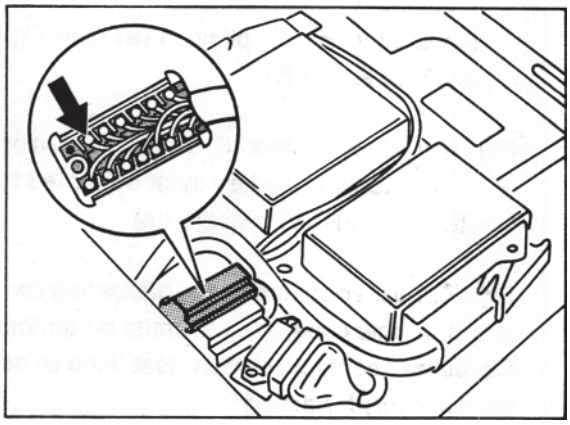

2214-90

2. Turn the key slowly from position 0 to position II in the ignition lock and observe the position at which the test lamp lights up.

Tiptronic vehicles:

The buzzer contact signal can be observed on the
LEDs of the selector indicator (speedorneter instrument cluster).

1. Turn the key slowly from position 0 to position II in the ignition lock.

2. Observe the position at which one of the LEDs of the selector indicator lights up.

Important!

Manual and Tiptronic vehicles:

Depending on the position of the buzzer contact, for tuning (point 6 on page 3), the ignition key must be turned to

- position I (windshield wipers on)

  or

  the buzzer contact position (S) (see Fig. 2213-90 A and B).

Fig. A: buzzer contact (S) between position 0 and I. For tuning, the key must be turned to position I (windshield wipers on).

Fig. B: buzzer contact(S) between positions I and II. In this case, the key must be turned to the buzzer contact position (test lamp or selector indicator) for tuning.

Exception!

If the buzzer contact is reached just before or directly at "ignition on":
...tuning is not possible. In this case contact Porsche, Dept. VKG.

Tuning:

Tiptronic vehicles:

Before tuning the remote control units, check the key position at which the buzzer contact is operated. Then tune the units (see pages 3 and 4).

Manual vehicles:

Try to tune the units first.
Reason: In the majority of cases, the buzzer contact will be operated between ignition key positions 0 and I.
If it is not possible to tune the units on a manual vehicle, a test lamp must be used to locate the buzzer contact position.
Tuning must then be repeated.

Tuning the remote control units

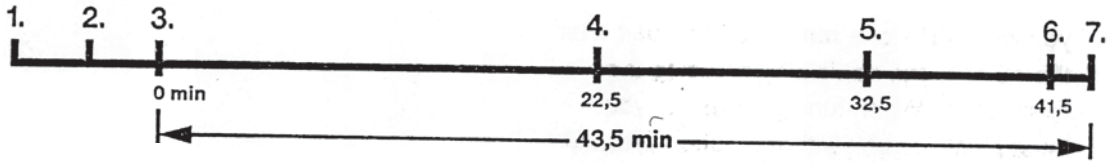

The diagram shows the sequence of events. The time required is at least 43.5 minutes.

1. **Unlock** the vehicle **using the remote control unit** and open the door. Do **not** insert the key into the ignition lock (the door of the vehicle may be open or closed.)

2. Wait **3 minutes.** After this time, the immobilizer will **prime itself.**
   In order to ensure that you comply with the times given below, please use a stopwatch or alarm clock. If necessary, write the times down.

   Note:

   When the instructions below require "switch ignition on and off", it is sufficient to turn the ignition key until the ignition is switched off.

3. Now **start the stopwatch and at the same time switch the ignition on.**
   Leave the ignition key turned to "**ignition on**".
   Switching the ignition on starts a sequence of operations. After 41.5 minutes (± 1 Min.), the system reaches the status "tuning of remote-control units."

4. After **22.5 minutes** (± 2 Min.), the **ignition** must be switched off and on again.

5. After a total time of **32.5 minutes** (± 2 Min.), the **ignition** must again be switched off and on.
   Then lift the **windshield wipers** off the windshield (to detect ignition key position I (see point 6).

6. After a total time of **41.5 minutes** (± 1 Min.), perform the following sequence, starting with the ignition on:
   - set wiper switch to stage 1
   - ignition off
   - ignition on
   - ignition off
   - remove key from ignition lock
   - insert key into ignition lock and turn to pos. I **or** to buzzer contact (not **"ignition on"**).
     If the key is in the correct position, either the wipers must be switched on in pos. I or, in buzzer contact position, the test lamp or selector LED must light up (see examples on page 2).
   - Remove key from ignition lock.

7. After the key has been removed, you have **a total time of 1 minute for tuning** the remote control units. During this 1 minute, you must tune one remote control unit after the other to the vehicle by pressing the pushbutton. When tuning the units, you must point the unit with the button pressed towards the control unit for **at least 5 seconds**.

8. The status "tuning of remote control units" is ended when:
   - 4 remote control units have been tuned
     or
   - a fifth remote control unit is operated within the minute
     or
   - one unit is operated twice
     or
   - the minute has elapsed.

Note

Any remote control units already assigned to a vehicle which are not tuned during a tuning session lose their validity for the vehicle.

Emergency unlocking of the door using the key

Note

The key should only be used for emergency unlocking in the event of a failure of the remote control unit.

1. Hold the key in the unlocking position and open the door at the same time using the door handle. The alarm is triggered immediately.

2. It is not possible to deactuate the immobilizer or the alarm system. The engine cannot be started.

3. The door is locked again as soon as it is closed. The central locking system remains in operation.

90 68 Immobilizer from model '95

Emergency unlocking of the door using the key

The key should only be used for emergency unlocking in the event of a failure of the remote control unit.

De-activation of immobilizer (with vehicle locked)

It is possible to switch off the acoustic alarm for 2 minutes so that the immobilizer may be de-activated by **entering a four-digit code number specific to the vehicle**. The four-digit code number (key card) is entered using the ignition key by a **sequence of ignition on and off operations**. The time available for entering the number is **100 seconds.** Each digit of the code number is determined by the number of **ignition OFF-ON** operations, starting with the left digit. To enter "0", the ignition must be switched from off to on 10 times.

You must **wait for the warning light to go on before entering the next digit**.

1. The door lock must be **unlocked, locked and unlocked again in 5 sec.** The acoustic alarm is then interrupted after 1 second.

2. Open the door within **10 seconds** and switch the **ignition** on. The **warning light** in the clock will then light up and go out again after **15 seconds.**

3. **Switch the ignition off and on again within 5 seconds. The warning light** will light up and start to **flash after 15 seconds.**

4. You must start to **enter the code number** within **5 seconds**.

5. Example: code number 1312

1 = ignition off-on
wait for warning light
3 = ignition off-on, off-on, off-on
wait for warning light
1 = ignition off-on
wait for warning light
2 = ignition off-on, off-on

6. If the number is correct, **the warning light will flash.**
   This is also the point at which tuning of the remote control units can start.

Note

After the warning light has flashed (point 6) and the ignition has been switched on again, the engine can be started.

The immobilizer is deactivated and the alarm system and central locking system are unlocked. If the warning light does not flash after the code number has been entered, steps 1-5 must be repeated.
Emergency deactivation does not deactivate the self-priming function of the immobilizer system.

Printed in Germany - I3, 1995

Tuning remote control units

Note

A maximum of four remote control units may be assigned to a vehicle at the same time. Additional remote control units must **always** be tuned to a vehicle **together** with the two units already assigned to it. Before the code number is entered, the **immobilizer** must be primed but the alarm and central locking systems must not be activated. This status is reached **90 seconds** after the ignition key has been removed or **3 minutes** after the vehicle has been unlocked using the remote control unit if the ignition key is not turned in the lock.

Entry of code number

1. Switch the **ignition** on. The **warning light** in the clock will go on and off again after **15 seconds**.

2. Follow the instructions in points 3 to 6 on page 7.

3. If you have reached the tuning status (point 6 page 7 **warning light is flashing**) the remote control units **must be tuned within one minute.**

4. Press the pushbuttons of the remote control units until the **LEDs** of the alarm system in the doors **flash** (as an acknowledgement). Operate all the remote control units one after the other.

5. If no more remote control units are operated within **1 minute** or the ignition is switched off, tuning is stopped.

911 Carerra RS vehicles

Note

As Carrera RS vehicles are not equipped with a central locking system, both doors must be locked and unlocked using the key.

To deactivate the immobilizer, the remote control unit must be **operated twice** in the following situation.
The immobilizer has self-primed and the ignition has not been switched on.

If the ignition is switched on before operating the remote control unit or the remote control unit is used to activate the immobilizer, the remote control unit must only be operated **once.**

The procedure for tuning remote control units is the same as for the 911 Carrera (993) from model '95.

Printed in Germany - I3, 1995

90 68 19 Removing and installing immobilizer control unit

Removal

1. Remove left seat.

2. Remove shear bolts using a cross cut chisel and remove cover.

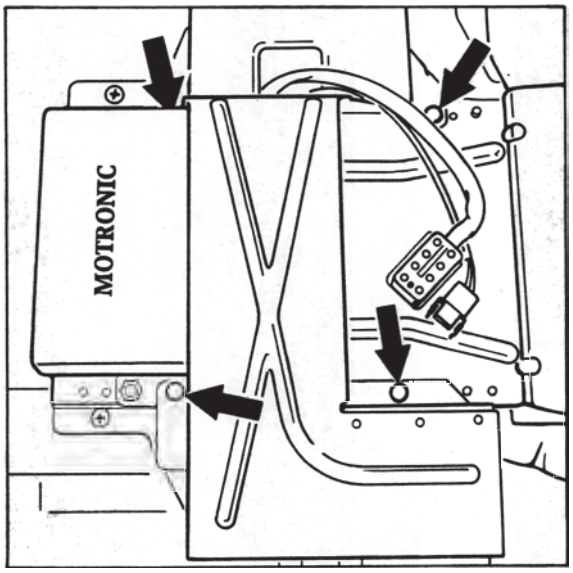

2006-24

3. Loosen control unit and unplug connector.

Installation

Break off new M 6 x 13
shear bolts, part no. 999 074 051 02 using a Torx E6 socket wrench.

Removing and installing control unit of RS vehicles

Removal

Loosen flanged nut using a cross cut chisel.

Installation

Tighten new M5 flanged bolt with stop teeth (part no. 999 507 472 02) using circlip pliers, e.g. Hazet 4843a-12.

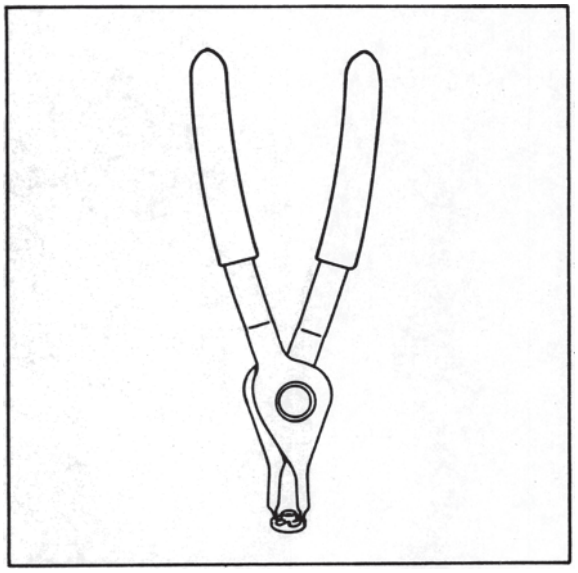

2219-24

Note

Tighten the control unit carefully. The plastic mounting lugs can break off. The serial number must **not be left on the control unit** after installation. The two stickers must be handled confidentially together with the customer. One sticker must be attached to the invoice and the second sticker given to the customer.

90 73 37 Disassembling and assembling hand-held transmitter

Car keys with integrated hand-held transmitter for vehicles with immobilizer

Note

The car key has been designed as a folding key.
Folding out:
Hold housing in your left hand and press "A" button.
Folding in:
Press "A" button and fold key into the housing manually.

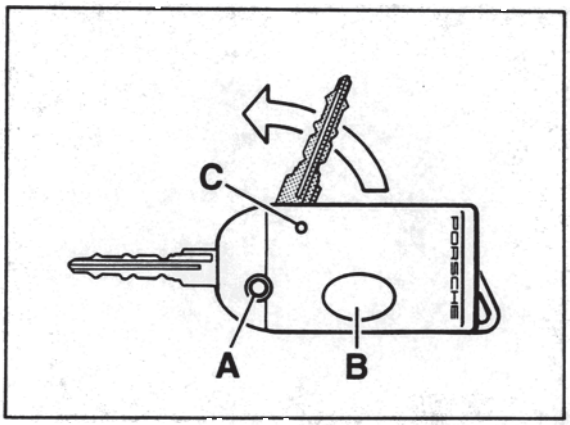

2307-90

A - Button to fold the key in and out

B - Key for remote control

C - LED

Disassembling housing with key

1. Slacken screw in upper part of the housing and remove upper part.

2. Carefully remove battery and printed-circuit board.

3. Fold out car key with "A" button from lower part of the housing.

4. Carefully open and pull out cap using a small, pointed screwdriver and working from the front (arrow). Remove compression spring.

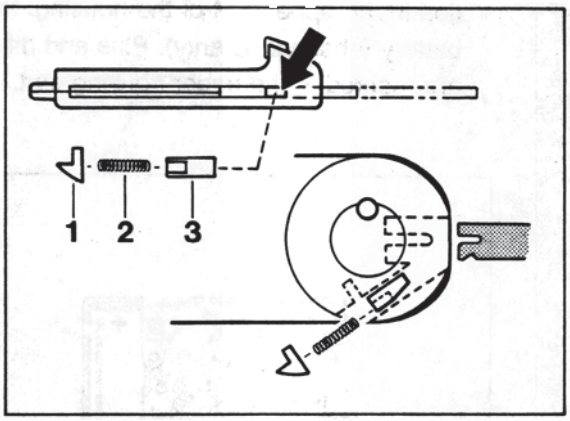

2308-90

1 - Cap
2 - Compression spring
3 - Locking slide

5. Push locking slide in the lower housing part slightly back using a screwdriver and pull out key.

6. Reinstall compression spring and cap. Snap new key into the lower part of the housing.

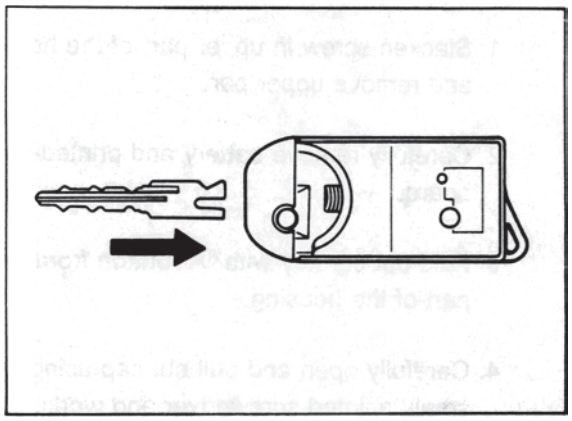

2310-90

7. Install printed-circuit board in correct position in the upper part of the housing. Install battery (observe polarity). Plus and minus are marked in the upper housing part.

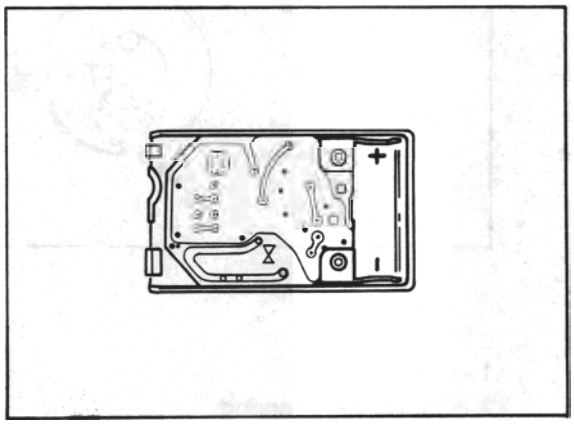

2311-90

8. Fit upper housing part and check operation.

91 55 23 Retrofitting a D-Net telephone system

D-Net telephone wiring harness

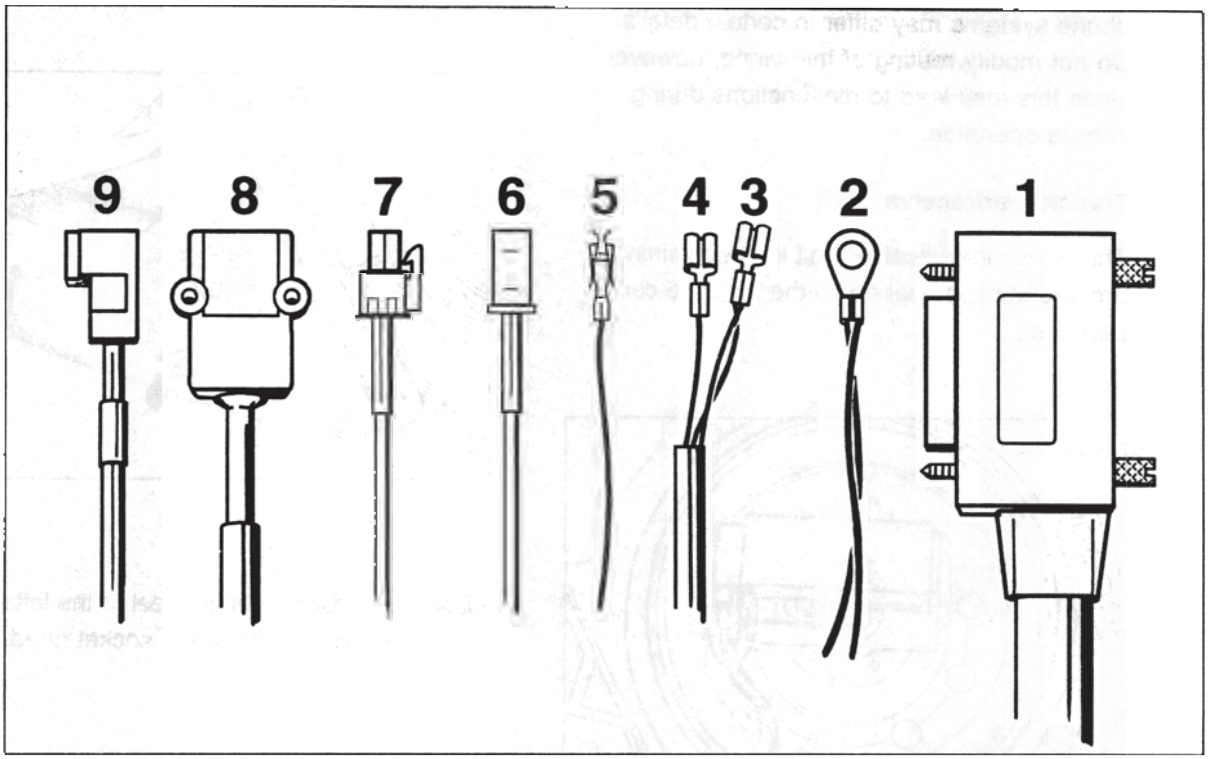

1962-9T

1 - Transmitter/receiver connection

2 - Ground / ground point VI

3 - Term. 30 connection

4 - Term. 15 connection

5 - Radio muting connector III - black
Contact No. 2

6 - Microphone connection

7 - Speaker connection

8 - Separate card reader connection

9 - Operating unit connection

Rubber grommet and terminal are fitted to the wiring harness.

Installation position of components

Note

Retrofitting is described taking the Motorola International 2000 as an example. Other telephone systems may differ in certain details. Do not modify routing of the wiring, however, since this may lead to malfunctions during vehicle operation.

Transmitter/receiver unit

The transmitter/receiver unit is fitted within the emergency spare wheel in the luggage compartment.

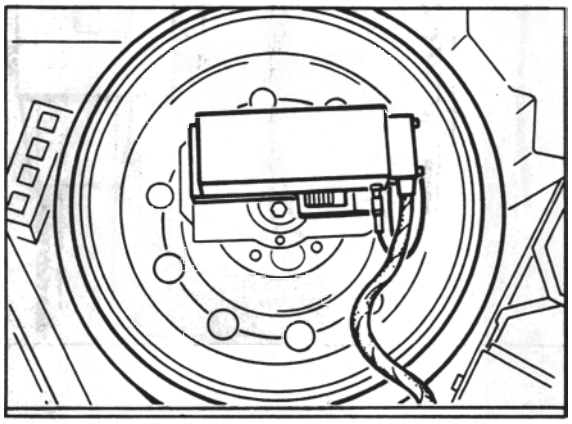

1950-91

The mounting bracket for the transmitter/receiver unit is included with the respective telephone version.

Telephone console

The telephone console is bolted to the right-hand side of the center console in the footwell.

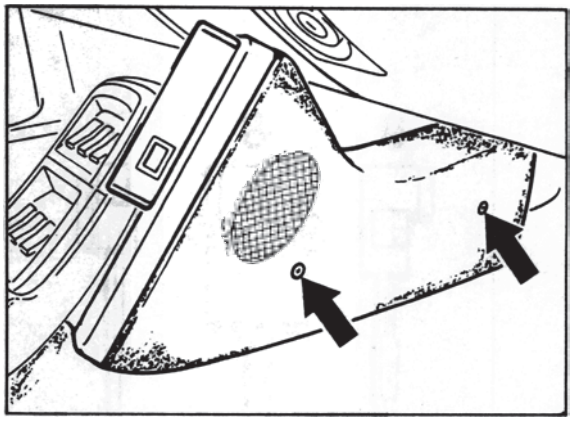

1951-91

Fit seat stop for passenger seat to the left seat rail below the front hexagon socket head bolt.

Operating unit

Assembly instructions and/or drilling template are supplied with the respective telephone model.

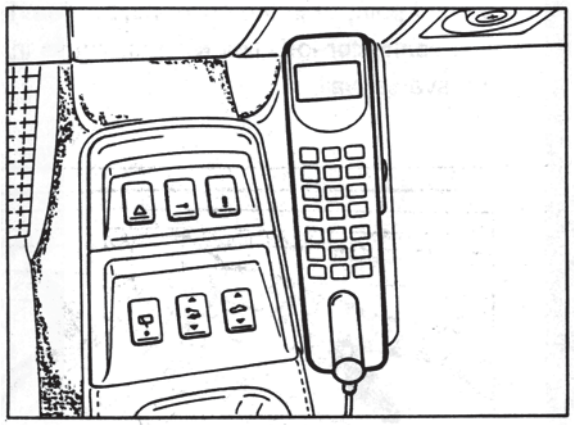

Handsfree microphone

The handsfree microphone is located in the upper section of the steering column panel.

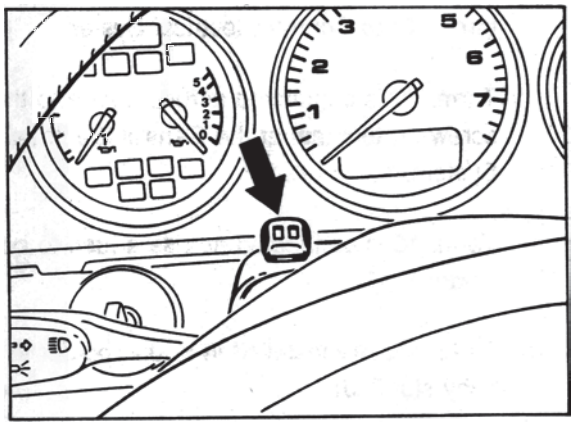

1953-91

Hole pattern for handsfree microphone assembly panel.

The figure below shows the hole pattern from below (upper section of steering column panel).

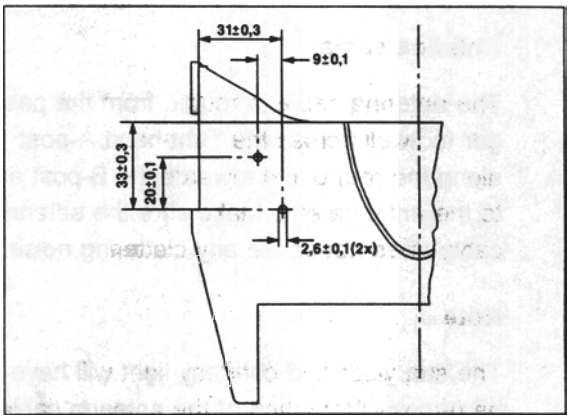

1954-91

Fitting an antenna to the Coupé

Center of vehicle and **100 mm** from rear edge of roof panel.
Drill hole dia. 18 mm

Fitting an antenna to the Cabriolet

Vehicle center and center of windshield outer frame/soft top mounting.
Drill hole dia. 18 mm

Note

The windshield antenna must **only** be used for radio operation.

Routing the wiring

Always insert suitable rubber grommets when routing wires through drill holes in sheetmetal panels.

Antenna cable

The antenna cable is routed from the passenger footwell across the right-hand A-post along the roof panel towards the B-post and to the antenna exit. Make sure the antenna cable does not cause any clattering noise.

The sun visor and courtesy light will have to be removed for fitting of the antenna cable.

D-Net wiring harness

The wiring is routed from the transmitter/receiver unit towards the front wiring harness. It is tied to the front-end wiring harness with standard tie-wraps. In the strut area, a mark to aid assembly is attached to the wiring hamess.

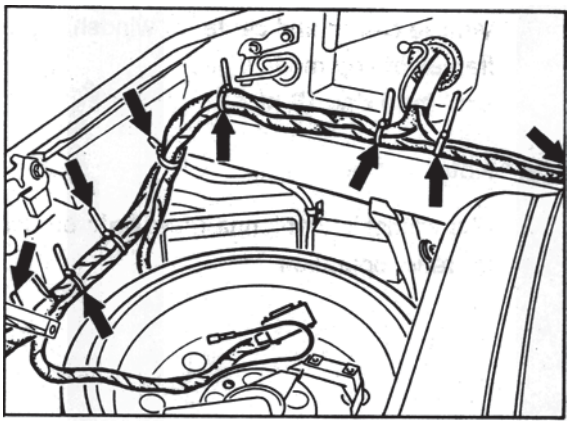

1955-91

Attach white mark to standard tie-wrap location.

Fit edge protector to strut tower area. Attach telephone wiring harness with wire clamp to wiring harness cover. Connect ground to ground point VI in the cover hinge area. Fit end connector to D-Net wiring harness in transverse wall.

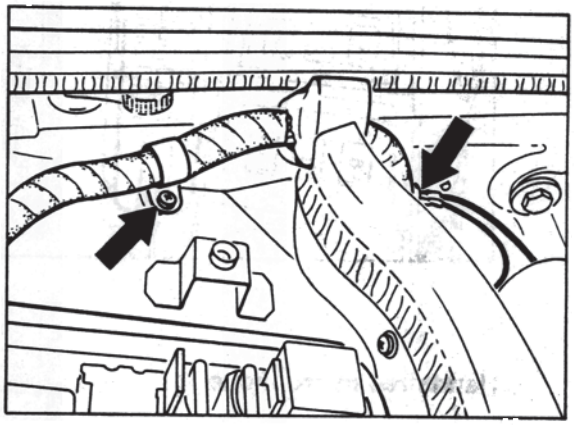

1956-91

Connect power supply wires (term. 15 and term. 30) to Central Electrical System.

Term. 30 is connected across a fuse to the screw-on terminal at the Central Electrical System.

Term. 15 is connected across a fuse to connector K 13.

The fuses are installed in a fuse holder in relay slot R 62.

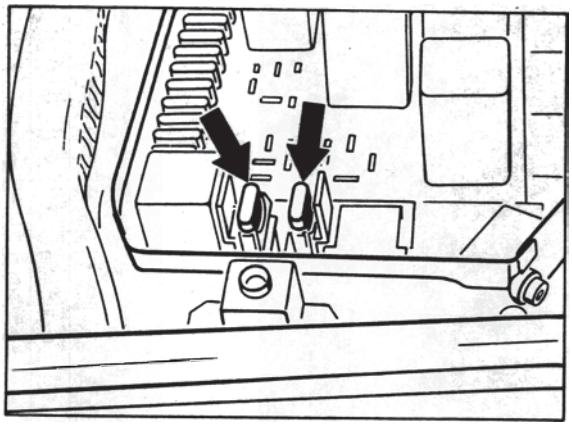

1957-91

Fusing of term. 15: 7.5 A
Fusing of term. 30: 7.5 A

The wiring harness is ruoted across a separate 41 mm dia. drill hole into the passenger compartment. Make drill hole at the indicated centerpunch point in the Transverse wall. The rubber grommet destined for this purpose is fitted to the wiring harness

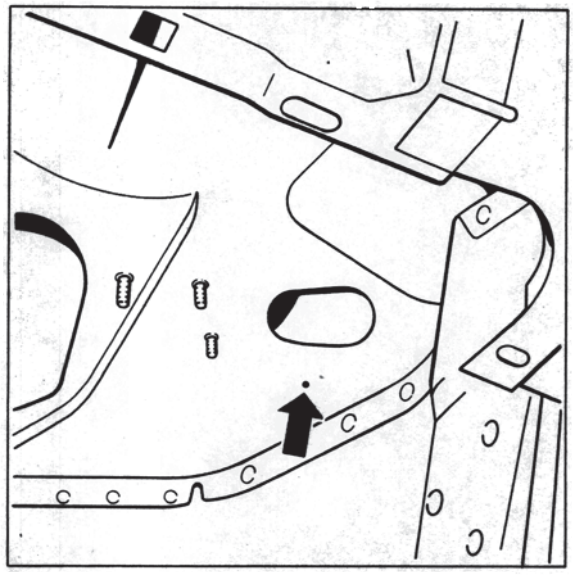

802-91

The power supply leads to the operating unit and handsfree microphone are routed along the passenger compartment wiring harness to the tunnel and along the tunnel upper edge.

Note

On **M 692** (optional radio with **CD changer**), the radio muting wire no. 5 (telephone mute line) is **insulated** and tied to the harness.

Exception:

With the München RD 104 (M 687) radio **with sound package** (M 490), the telephone mute line must be connected to contact 4 of connector I.

If a sound package is **not** installed, the telephone mute line must not be connected and must remain insulated.

With the Düsseldorf RCR 84 (M336) radio, the telephone mute line must not be connected: tie up the **insulated** line.

See also technical information bulletin no 70/94 for 911 serie.

91 20 01 Check list of possible faults on the Porsche Autoradio CR 10

Symptom	Reason	Remedy	Refer to radio Op. Manual page:
• Radio cannot be switched on	• Fuse faulty	• Replace fuse	53
	• Incorrect polarity of wiring harness wires ➪ Faulty fuse	• Replace fuse, Remove fault in harness	
	• Pin in connector block chamber A is bent	• Realign	53
• Unit switches off by itself	• According to specification; After 1 h, if terminal 75 (ignition) off	• Switch unit on again	
• Code input not possible	• Incorrect or no code card	• Compare series No. on unit and code card ➪ Inform Becker GmbH company	32 + 33
• "WAIT" on LCD	• Incorrect code was entered 3 times	• **Caution:** Unit must remain on for 10 minutes until new code can be entered	32 + 33
	• Incorrect code was entered 9 times	• **Caution:** Unit must remain switched on for 60 minutes until new code can be entered	32 + 33
• No sound; Low sound; Sound different at front, rear, left or right	• Fader or balance settings not in center position	• Adjust fader or balance	34 + 35
	• " Phone" display on LCD	• Mute via telephone?	46
• Fader, balance cannot be adjusted	• Active traffic program	• Wait for end of traffic program	44 - 46
• Optical theft protection does not flash	• Function is switched off	• Function can be adjusted	33
	• LED faulty	• Inform Becker GmbH company	33

Symptom	Reason	Remedy	Refer to radio Op. Manual page:
• Alarm is triggered constantly	• Insulating plate on chassis missing	• Replace radio	
	• Mounting frame rotated by 180°	• Rotate mounting frame by 180°	
• Alarm inoperative	• Wire not connected	• Connect wire	
	• Contact on mounting frame bent	• Straighten	
• No sound	• Speaker chamber B not connected, Connector not connected properly	• Connect unit correctly	53
	• Sound system chamber C not connected, Connector not connected correctly	• Connect unit correctly	53
	• Pins in connector block of chamber B or chamber C bent	• Straighten	53
	• Speaker faulty	• Check speaker	
	• Wiring harness missing, incorrect or faulty	• Check wiring harness	53
	• Volume adjustment	• Increase volume adjustment	34
	• Sound system faulty	• Check sound system	53
	• Unit is muted	• Deactivate muting	45
• Sound present in spite of muting	• Only during initial 20 seconds after turning on if muting was activated when unit was last turned off	• None, sound is automatically switched off after 20 sec	45
• Cassette winds automatically during CC operation	• According to specifications (in blank sections) ➪ Skip-blank function	• Deactivate Skip-blank function	48
• "CLEAN" displayed during CC operation and beep of approx. 1 sec,	• After approx. 30 hours of cassette operation ➪ User display	• Use cleaning cassette	49

Symptom	Reason	Remedy	Refer to radio Op. Manual page:
• No sound in CD operating mode	• Pins in connector block chamber C bent	• Straighten	53
	• Wiring harness for CD changer missing, incorrect or faulty	• Check wiring harness	53
• No radio reception, noise, no station names	• Antenna cable not connected or faulty	• Check antenna cable	53
	• Antenna not raised (mech.)	• Pull out antenna	
	• Antenna not raised (electr.); Control lead not o.k.; Pin 5 of chamber A bent	• Connect control wire; Check control wire; Straighten	53
• No station names are displayed	• According to spec. ⇨ Fix mode	• Switch to RDS mode	38 + 39
	• Poor reception quality, No RDS sensing possible	• Tune in to other station	38 + 39
• Tuned station is no longer on station button	• Caution: 3 levels: FM mode, TP mode, Fix mode	• Adjust to correct level	37 - 39, 42, 44
	• Poor reception quality, no RDS sensing possible, "-- -- -- -- -- -- -- -- --" in display	• Tune in to other station	15
• Sound adjustments have changed	• When radio is reconnected, automatic basic setting is activated	• None	
• Sound adjustments differ	• 2 user sound memories exist	• None	36
	• Different sound adjustments for FM, traffic program, AM, CC and CD modes	• None	34
• Muting no longer turned on	• If no traffic stations can be received, muting is automatically deactivated	• None	19
• Radio shifts automatically between stations	• Only for regional stations: Regional operation is off ("RP OFF")	• Regional operation must be switched on ("RP ON")	43

91 60 23 Retrofitting of a CD changer

The following spare parts are required for retrofitting of a CD changer:

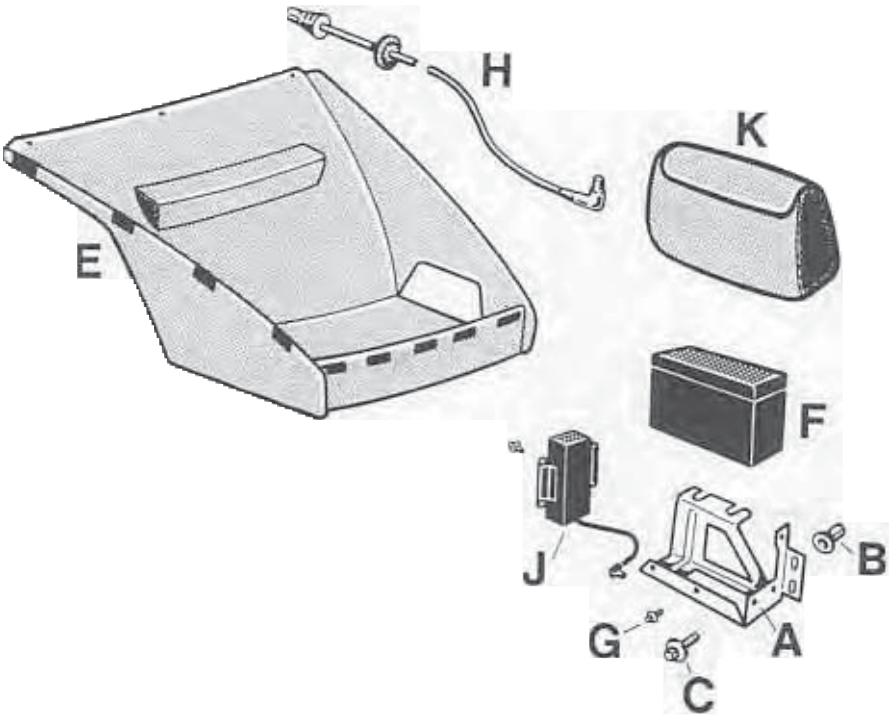

1154 - 91

A = Bracket for CD changer

B = Pop rivet nut M 6/0.9 - 3

C = Combination screw M 6 x 16

E = Front compartment carpet, modified for CD changer

F = CD changer

G = Combination screw M 4 x 8

H = Interface/radio connecting wire

J = Interface

K = Trim for CD changer

Retrofitting of a CD changer

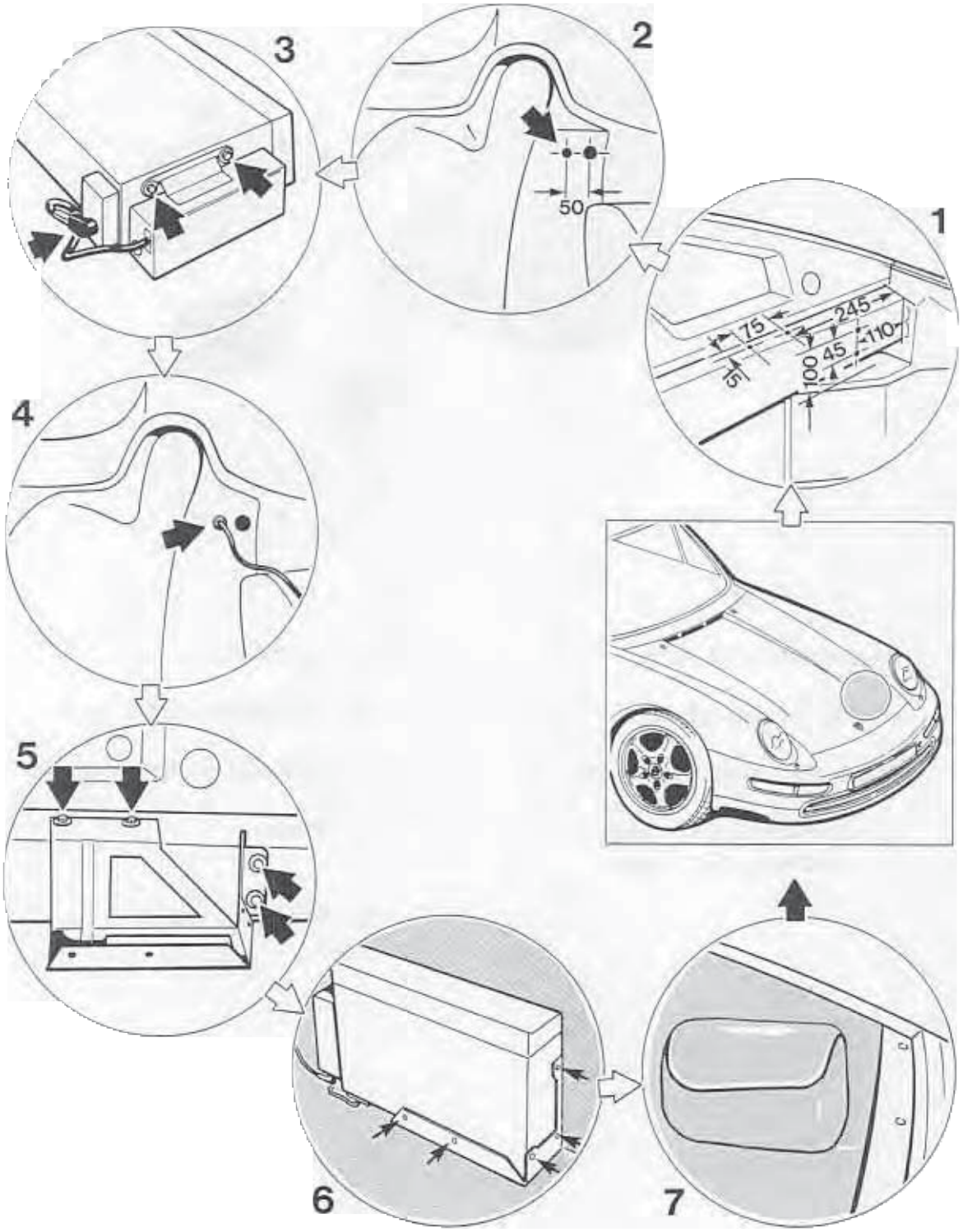

Retrofitting a CD changer

Remove front compartment carpet, spare tire, protective cover, fuel tank and battery!

No.	Operation	Instructions
1	Insert pop rivet nuts for attachment of the CD changer bracket into side member	Scribe attachment points for CD changer bracket on left-hand front end of side member. Using a 9.5 mm dia. drill bit, drill holes into side member according to scribe marks. Insert M 6 pop rivet nuts into side member and rivet in place using a pop rivet nut gun,
2	Drill 20 mm dia. hole for routing of connecting wire	Scribe hole for routing of CD changer/radio connecting wire on bulkhead and drill to 20 mm dia.
3	Finish assembly of CD changer	Remove transport locks from CD changer. Cover open holes on CD changer using the self-adhesive sheets supplied. Fit interface to CD changer using M 4 x 8 combination screws (4 pc.). Connect interface/CD changer wiring.
4	Insert connecting wire	Route connecting wire across hole in bulkhead, put grommet into place and insert connecting wire into radio. Tie connecting wire to wiring harness along side member.
	Install and connect battery	Enter radio code, correct clock setting and carry out system adaptation.
5	Fit bracket for CD changer	Fit CD changer bracket to side member, using M 6 x 16 combination screws (4 pc.).
6	Fit CD changer	Plug connecting wire into interface (CD changer). Fit CD changer to CD changer bracket, using M 4 x 8 combination screws (5 pc.).
	Check CD changer operation	
7	Fit spare tire, modified front compartment carpet and trim for CD changer	

92 00 19 Removing and installing windshield wiper system

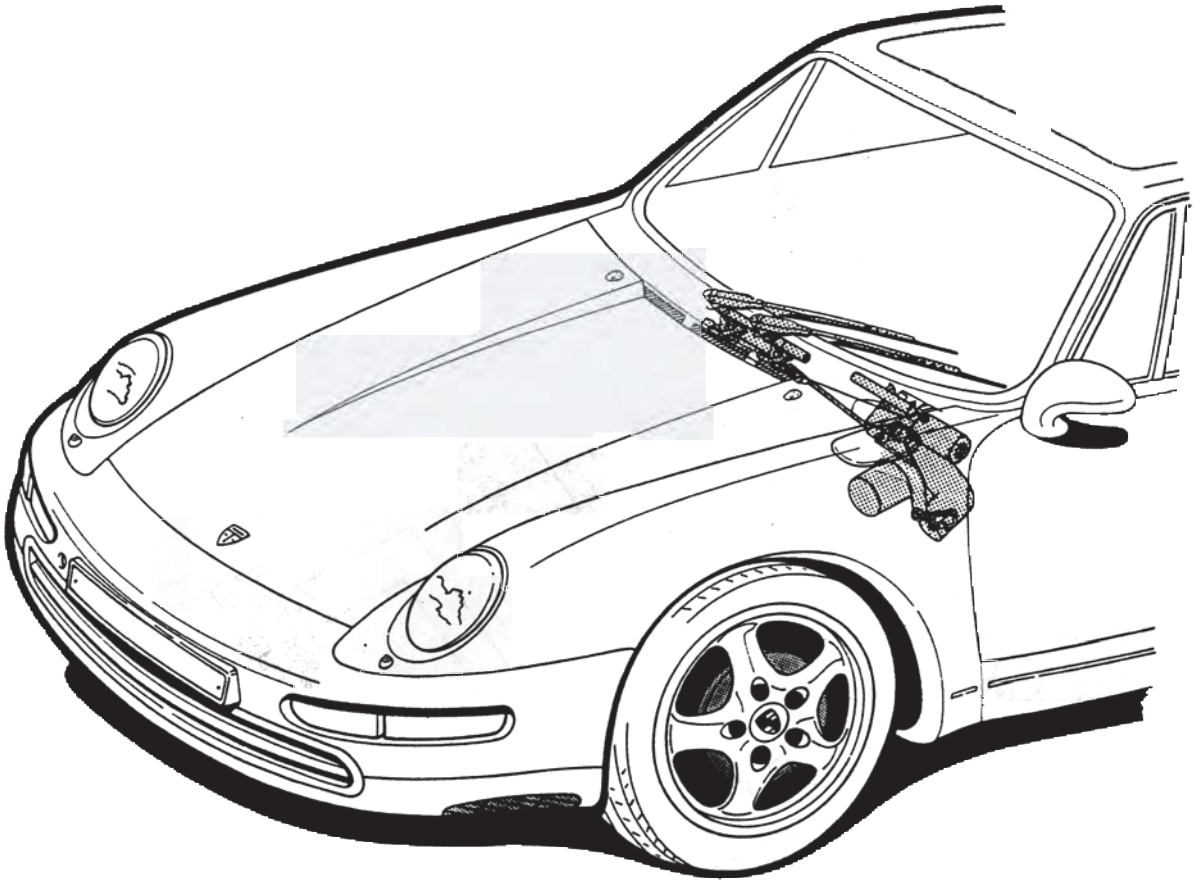

1625 - 92

92 00 19 Removing and installing windshield wiper system

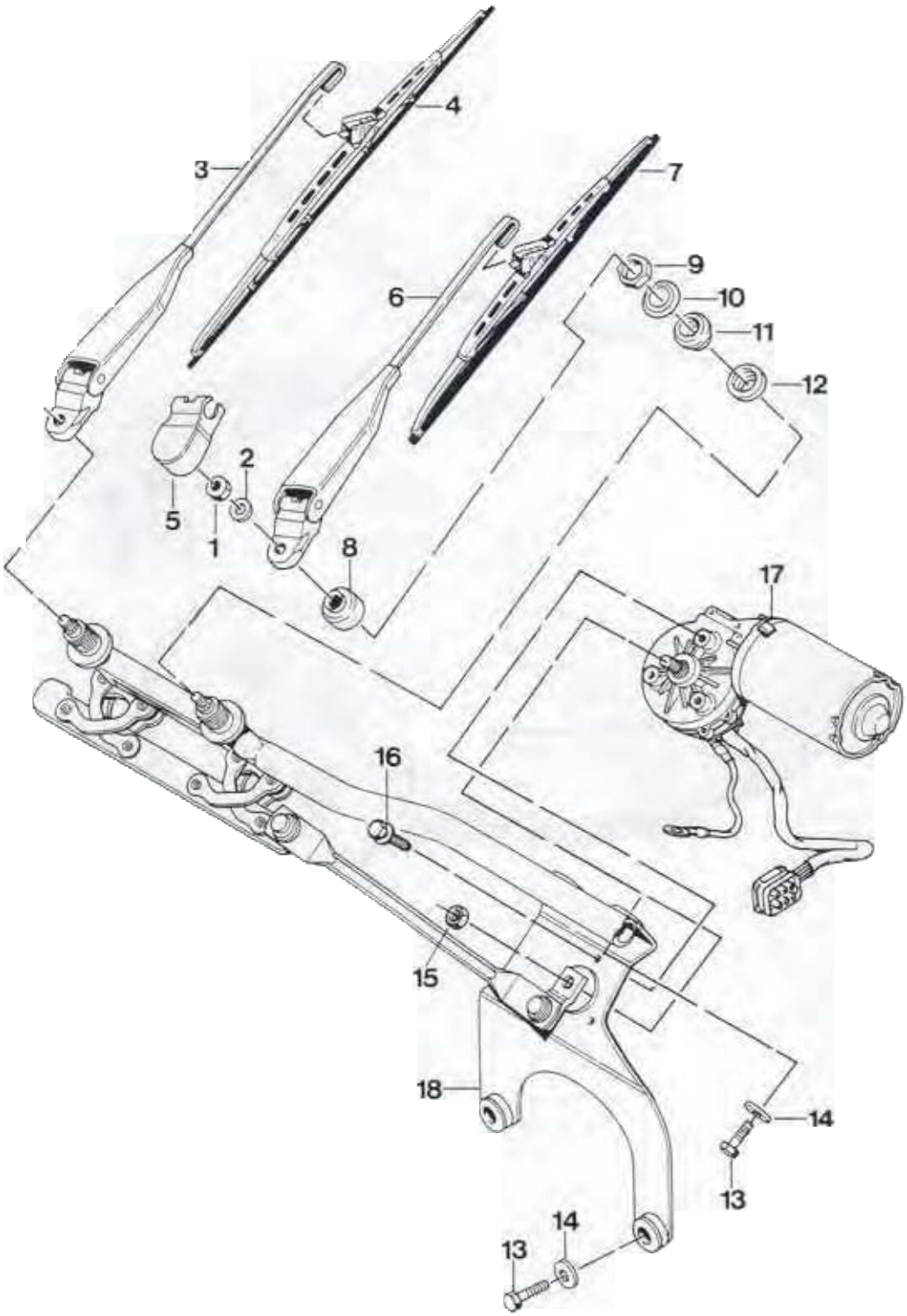

No.	Designation	Qty.	Note: Removal	Installation
1	Hexagon head nut M 8	2		M_A = 14 - 16 Nm (10 - 12 ftlb.)
2	Washer	2		
3	Wiper arm right-hand	1		
4	Wiper blade right-hand	1		
5	Cap	2		
6	Wiper arm left-hand	1		
7	Wiper blade left-hand	1		
8	Cap	2		
9	Hexagon head nut M 18 x 1	2		M_A = 10 +1 Nm (7 + 0.7 ftlb.)
10	Flange washer	2		
11	Rubber bushing	2		
12	Rubber bushing	2		
13	Hexagon head screw M 6 x 22	4		M_A = 10 Nm (7 ftlb..)
14	Washer A 6.4	4		
15	Nut	1		
16	Hexagon head screw	3		M_A = 11 Nm (8 ftlb.)
17	Wiper motor	1		
18	Crank gear	1		

92 00 19 Removing and installing windshield wiper system

92 00 19 Removing and installing windshield washer

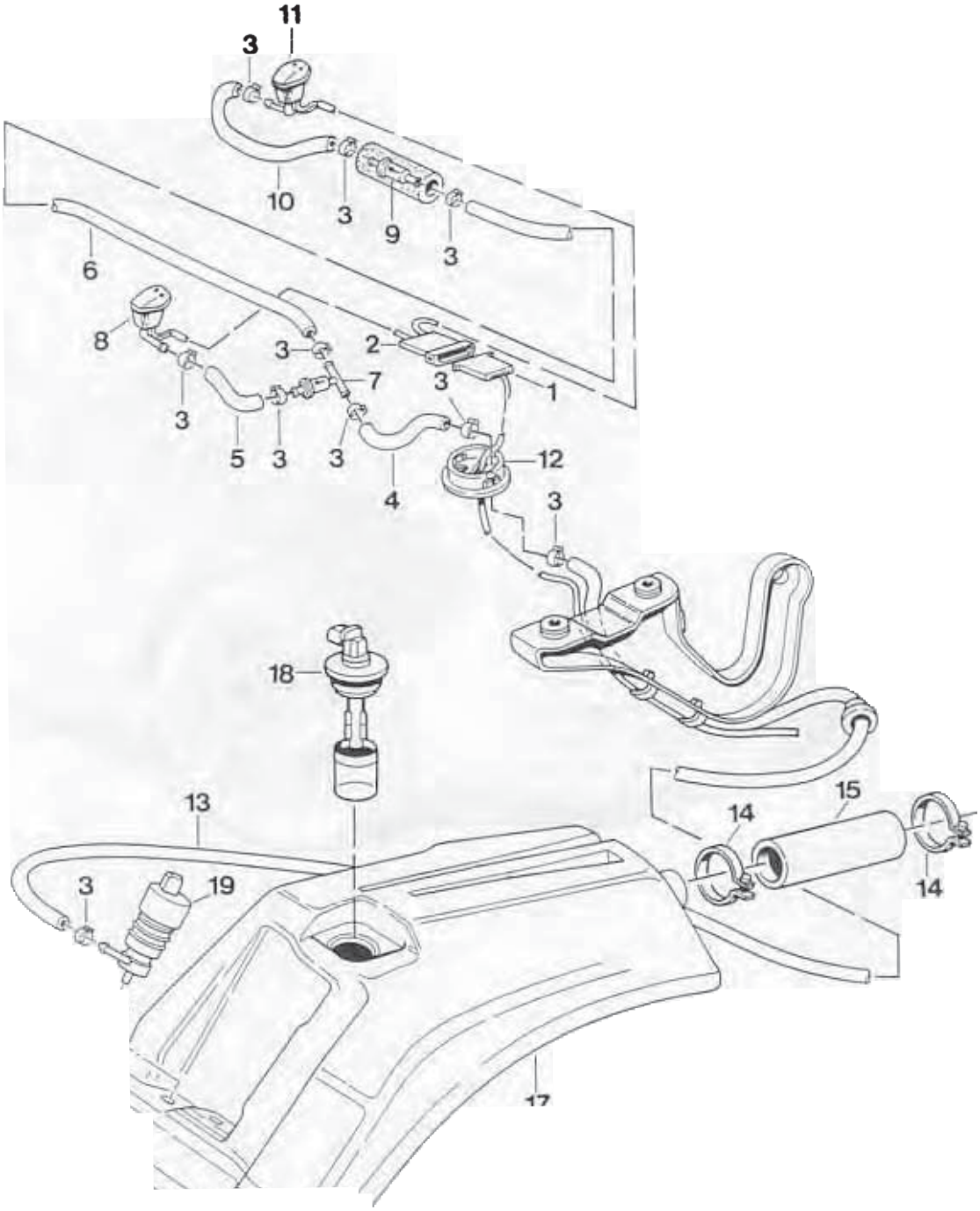

No.	Designation	Qty.	Note: Removal	Installation
1	Passenger wiring harness connector	1		
2	Connector housing for heated spray nozzle	1	Disengage wires with commercially available extracting tool	
3	Ear clamp	10		Replace
4	Hose	1		
5	Hose	1		
6	Hose	1		
7	Valve	1		
8	Spray nozzle left-hand	1	Push back and disengage lug	
9	Valve	1		
10	Hose	1		
11	Nozzle right-hand	1	Refer to No. 8	
12	Hose clamp	1		
13	Hose	1		
14	Hose clamp	2		
15	Hose	1		
16	Screw	2		
17	Water tank	1		
18	Sender for fluid level indicator	1		
19	Pump for windshield washer system	1		
20	Gasket	1		

92 00 19 Removing and installing headlight washer system

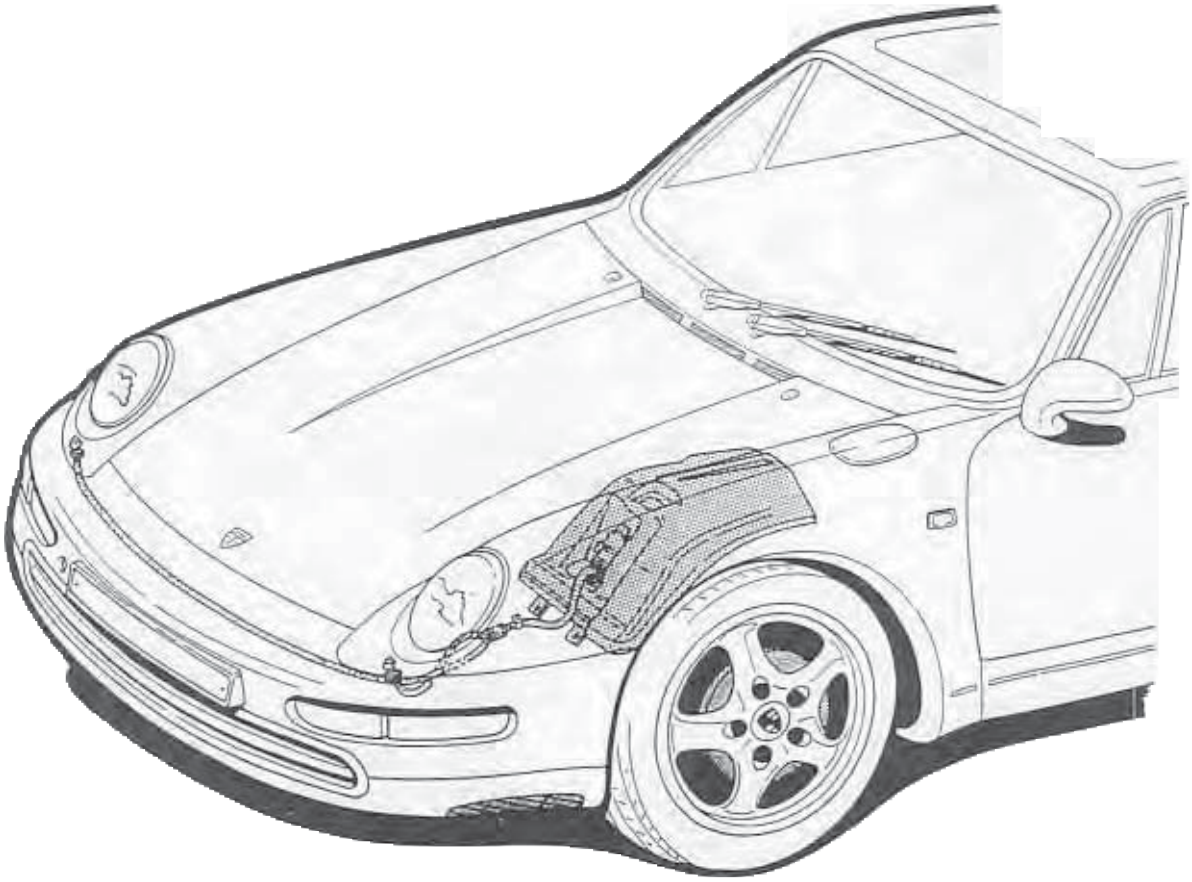

1627 - 92

92 00 Rem and insta ng headlight washer system

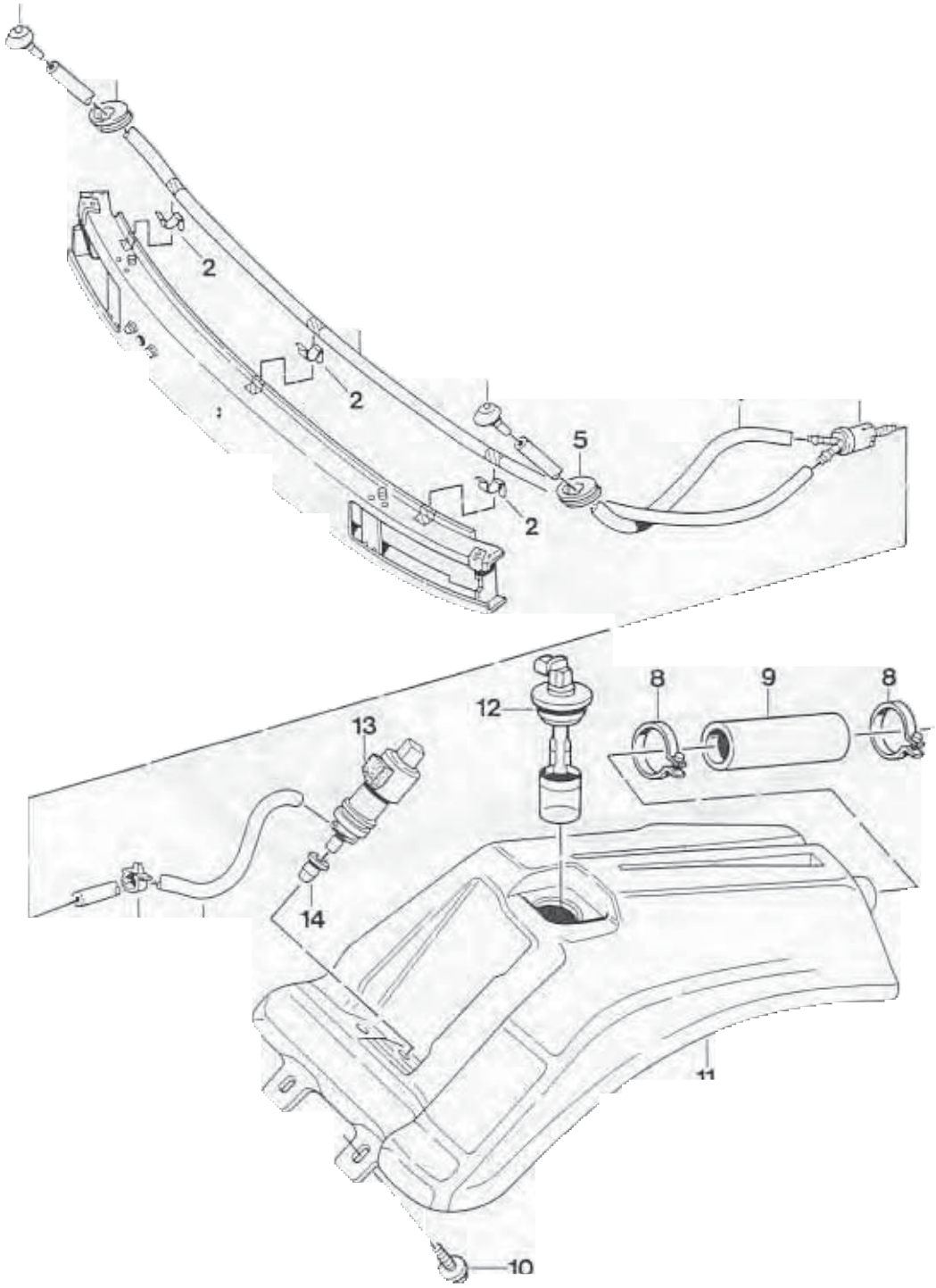

No.	Designation	Qty.	Note: Removal	Installation
1	Spray nozzle	2		
2	Clamp	3		
3	Hose	1		
4	Hose	2		
5	Grommet	2		
6	Bracket	4		
7	Valve	1		
8	Refer to p. 92 - 7 No. 14			
9	Refer to p. 92 - 7 No. 15			
10	Refer to p. 92 - 7 No. 16			
11	Refer to p. 92 - 7 No. 17			
12	Refer to p. 92 - 7 No. 18			
13	Pump for headlight washer system			
14	Gasket			

92 00 19 Removing and installing rear window wiper

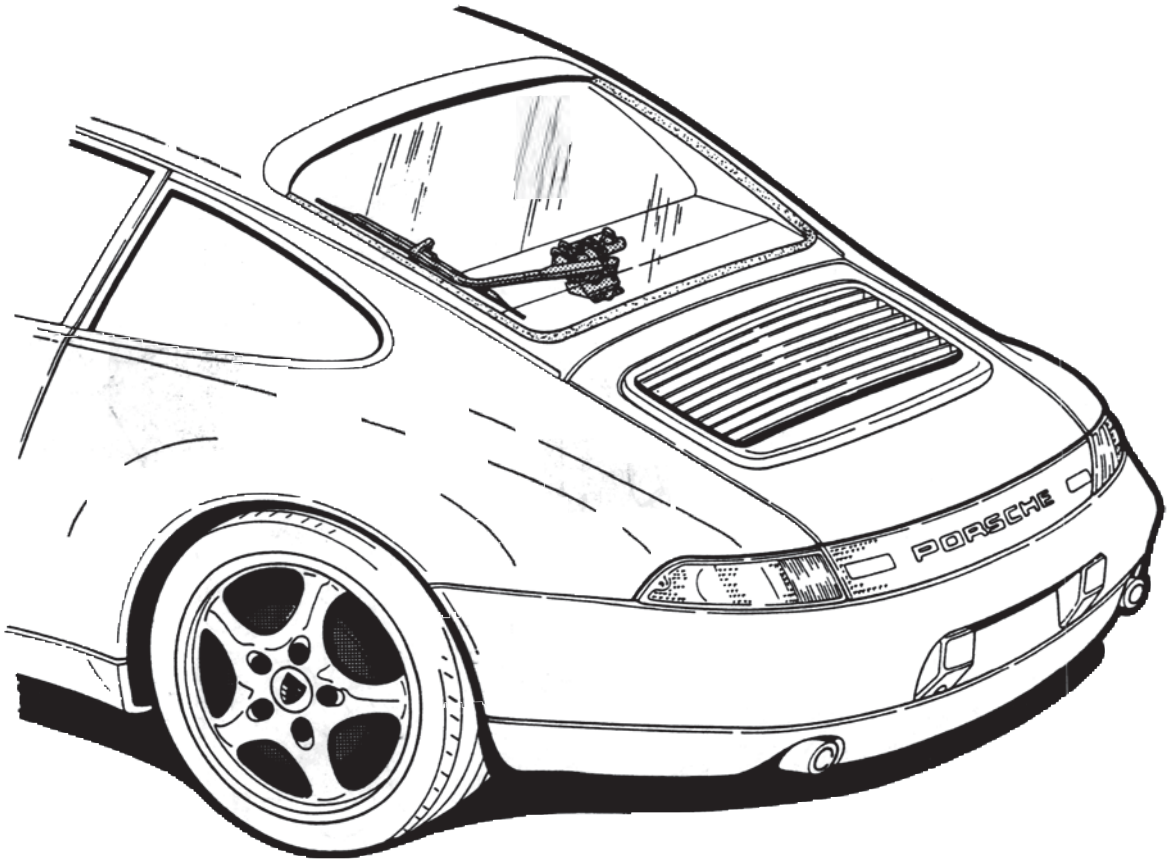

1628 - 92

92 00 19 Removing and installing rear window wiper

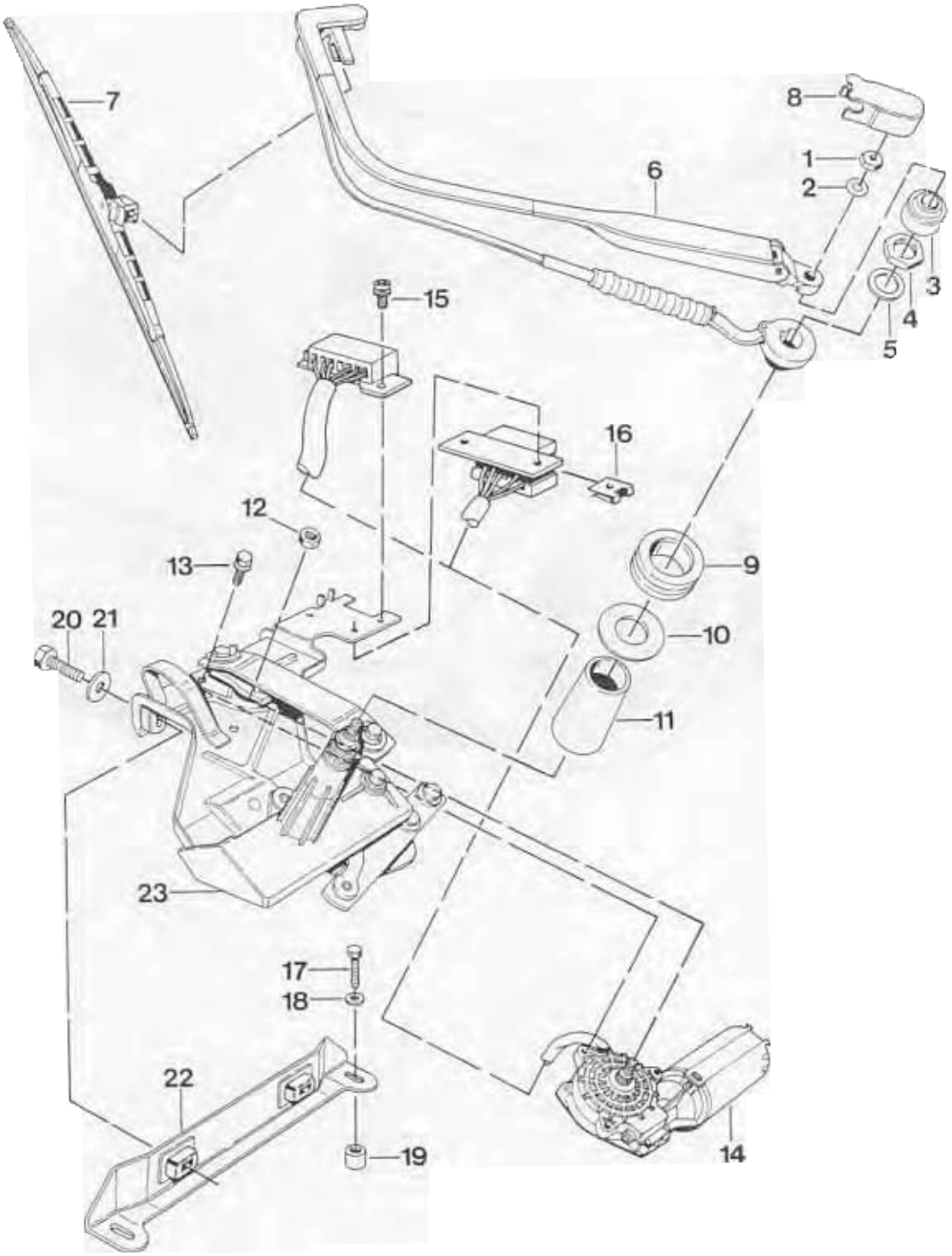

No.	Designation	Qty.	Note: Removal	Installation
1	Nut M 8	1		M_A = 20 - 25 Nm (15 - 18 ftlb.)
2	Washer	1		
3	Cap	1		
4	Nut M 16 x 1	1		M_A = 14 - 16 Nm (10 - 12 ftlb.)
5	Washer	1		
6	Wiper arm	1		
7	Wiper blade	1		
8	Cap	1		
9	Rubber bushing	1		
10	Washer	1		
11	Cover	1		
12	Nut	1		M_A = 10 Nm (7 ftlb.)
13	Screw	3		M_A = 11 - 12 Nm (8 - 9 ftlb.)
14	Wiper motor	1		
15	Self-tapping screw	3		
16	Sheetmetal nut	2		
17	Screw	2		M_A = 5 Nm (4 ftlb.)
18	Washer	2		
19	Bushing	2		
20	Screw	2		M_A = 8 - 10 Nm (6 - 7 ftlb.)
21	Washer	2		
22	Retaining bracket	1		
23	Assembly frame	1		

92 15 19 Removing and installing wiper motor (with A/C system)

Vehicles with air conditioning

Removal

1. Disconnect battery and cover battery or terminals.

Note

Follow safety precautions for work on vehicles with airbags.

2. Remove steering wheel and steering column panel.

3. Remove tachometer and large and small instrument cluster.

4. Remove air guide. Disconnect six-pin connector from wiper motor.

5. Unhook left pneumatic spring of luggage compartment lid and support luggage compartment lid.

6. Extract refrigerant with service equipment.

7. Remove cover of heater / A/C unit (old type with two screws and washers: new type with clamping spring).

8. Disconnect central electrical system.

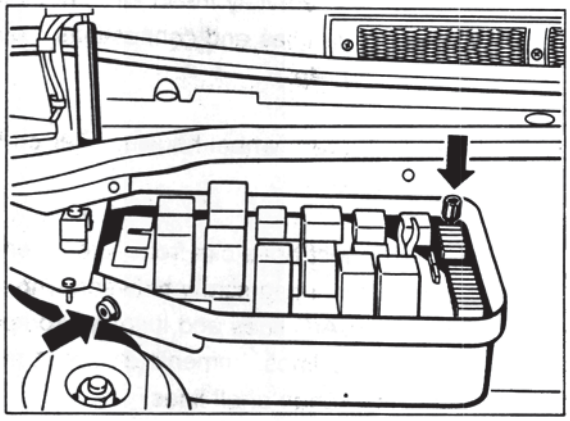

240-87

9. Remove wire harness cover.

241-87

10. Unplug connector from lid of fan housing and lay central electrical system on fender (the fender must be protected by a cover).

11. Unplug cable connector from final stage of fan.

12. Remove firewall.

13. Disconnect A/C lines from expansion valve. Immediately insert air-tight plugs in ends of all lines and connections. Loosen retaining clip.

14. Remove rear wheel housing liner on front left fender.

15. Disconnect hose clip from fluid reservoir. Undo mounting screw between wheel housing A/C lines and luggage compartment A/C lines. Immediately insert air-tight plugs in ends of all lines.

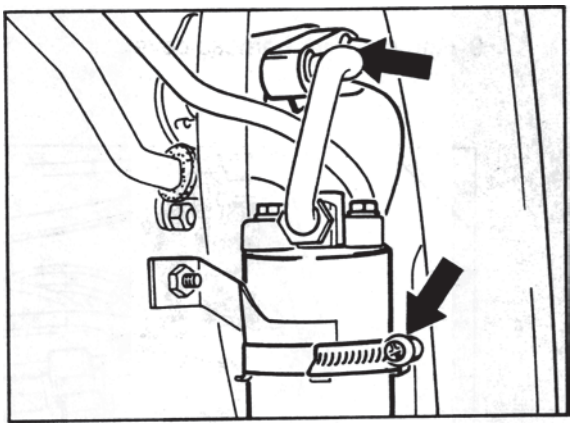

1897-87

16. Move A/C lines to side from wiper mount.

17. Release mounting nut of linkage, holding a 21 mm open-end wrench against linkage.

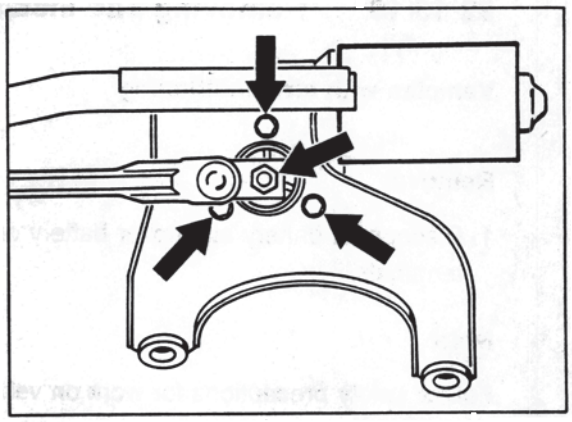

2072-92

Tightening torque: 22 ± 2 Nm (16 ± 1.5 ftlb.

18. Release mounting screws. Tightening torque: 11 Nm (8 ftlb.).

19. Remove wiper motor through installation opening of tachometer.

Installation

Note

Installation of the wiper motor is much easier if the motor is fixed in position with a stud bolt (sawn-off screw) and a nut. After fixing the motor, fasten it in place with 2 screws. Then unscrew the nut and stud bolt and insert the third screw.

1. Connect battery and switch wiper motor on and off (park position).

2. Install linkage. Cable and linkage must form a straight line.

3. Switch on wiper motor and check wiper positions.

4. **Disconnect battery again** and install the parts that you have removed. Use new O-rings and wet them with refrigerant oil.

5. Replace the two self-locking screws of the airbag unit in the steering wheel.

Note

To remove the crank mechanism of the wiper, the heater / A/C unit must be removed.

92 15 19 Removing and installing wiper motor (without A/C system)

Vehicles without air conditioning

Removal

1. Disconnect battery and cover battery or terminals.

Note

Follow safety precautions for work on vehicles with airbags.

2. Remove steering wheel and steering column panel.

3. Remove tachometer and large and small instrument cluster.

4. Remove air guide. Disconnect six-pin connector from wiper motor.

5. Unhook left pneumatic spring of luggage compartment lid and support luggage compartment lid.

6. Remove cover of heater / A/C unit (old type with two screws and washers; new type with clamping spring).

7. Undo mounting nut of linkage, holding a 21 mm open-end wrench against linkage.

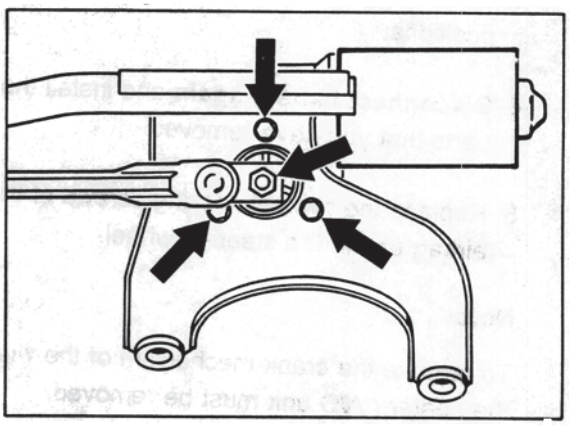

2072-92

Tightening torque: 22 ± 2 Nm (16 ± 1.5 ftlb.)

8. Release mounting screws. Tightening torque: 11 Nm (8 ftlb.).

9. Remove wiper motor through installation opening of tachometer.

Installation

Note

Installation of the wiper motor is much easier if the motor is fixed in position with a stud bolt (sawn-off screw) and a nut. After fixing the motor, fasten it in place with 2 screws. Then unscrew the nut and stud bolt and insert the third screw.

1. Connect battery and switch wiper motor on and off (park position).

2. Install linkage. Cable and linkage must form a straight line.

3. Switch on wiper motor and check wiper positions.

4. **Disconnect battery again** and install the parts that you have removed.

5. Replace the two self-locking screws of the airbag unit in the steering wheel.

Note

To remove the crank mechanism of the wiper, the heater / A/C unit must be removed.

94 15 19 Removing and installing main headlight mountings

Removal

1. Unlock the main headlight in the luggage compartment and remove main headlight. Unclip safely clip in mounting using a screwdriver and remove lock lever with rubber sleeve.

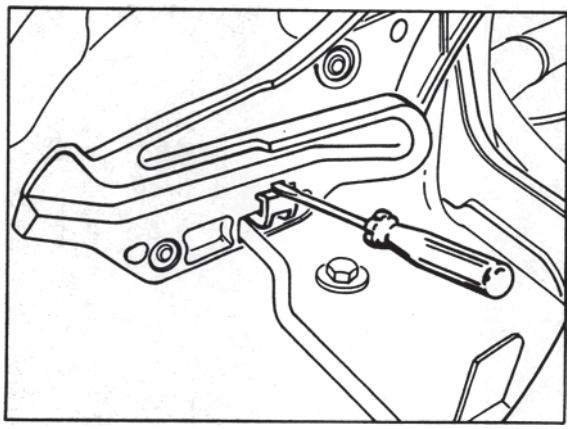

1885-94

2. **Only loosen** headlight mounting through openings in inside of luggage compartment using a 5 mm Allen socket wrench. Pull mounting up slightly and remove it.

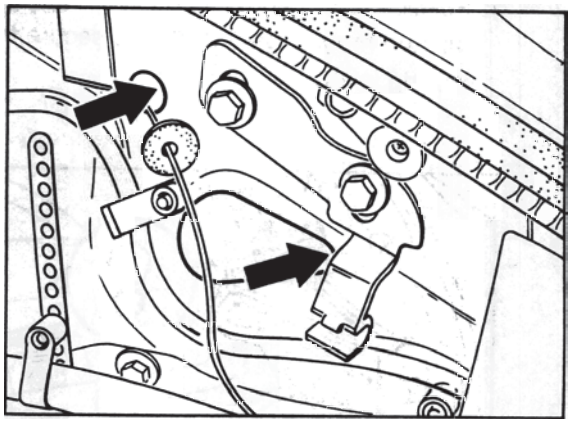

1886-94

3. Remove lower part of front spoiler. **Only loosen** the M 6 hexagon head screws from below and take out the mounting. Unhook the electric connector. Loosen headlight rail from below and remove it.

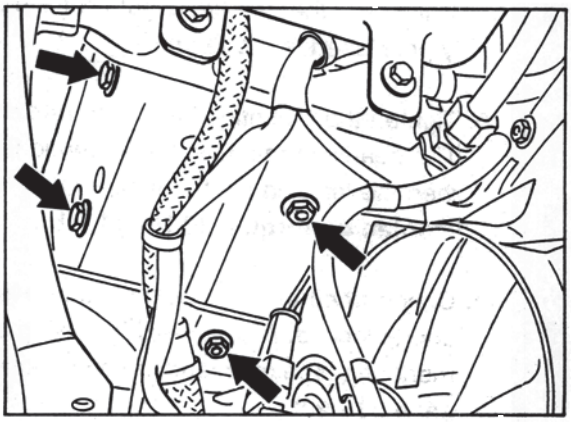

1887-94

Installation

1. Position, but do not tighten, the headlight rail and mountings. Install and secure the locking lever.

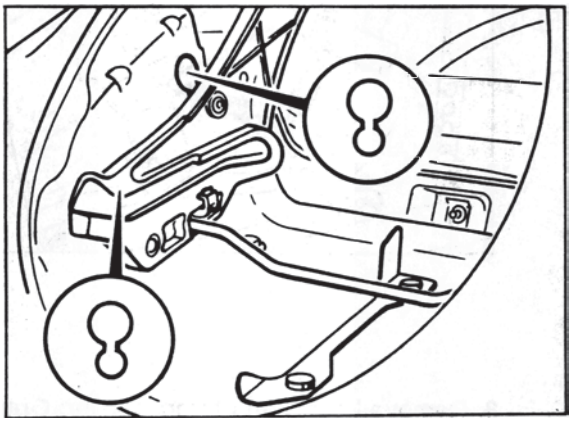

1888-94

2. Install headlight and lock it in position with the locking lever. A second person must press the headlight firmly into the fender. Make sure that the headlight seal is correctly positioned in the fender.

3. Tighten the mountings in the correct order! The headlight rail must be tightened first, then the left and right mountings.
Tightening torque: 10 Nm (7 ftlb.)

4. Check whether the headlight can be locked and unlocked. Adjust headlight using adjustment unit (see maintenance operations, page 03 - 20).

2. Flip over locking clamp on headlight hou: ing and take off cover with fitted igniter. Screw out electrical connector from D2S lamp (quarter-turn socket fastener).

3. Carefully bend tab washers (2 ea.) open at retaining ring. Press retaining ring down and turn left (quarter-turn socket fastener). Take out retaining ring and D2S lamp.

2. Place headlight housing into fender a lock housing in place. Engage lockin

3. Check operation and adjustment of h lights (refer to maintenance operatior

Troubleshooting

Note

If the dipped beam (Litronic headlight) is defective, only the individual components can be replaced. The wires and control units are connected to **high voltage**. Do not use **any measuring device** to measure the voltage of wires or control units.

Removing and installing gas discharg lamp (D2S)

See page 94 - 3

Removing and installing control unit

1. Loosen fastening screw on control u bracket and remove control unit.

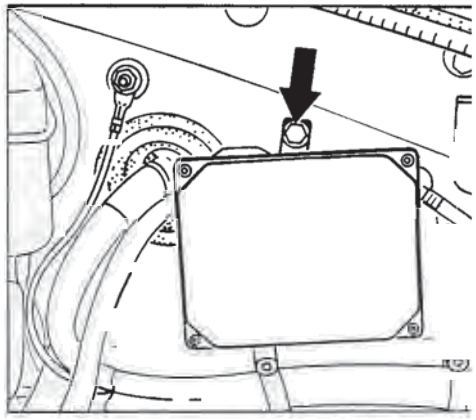

2. Disconnect electric plug connection and detach bracket from control unit.

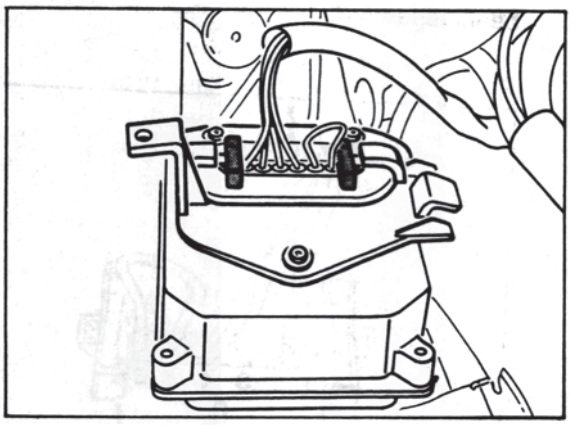

2232-94

3. Install new control unit and check operation.

Removing and installing trigger device

Note

To check operation, the trigger unit of the second headlight can be installed.

1. Remove headlight housing. Fold back retaining bracket on headlight housing and remove lid with integrated trigger device.

2. Unscrew electric plug connection on D2S lamp (bajonet catch) and separate plug connection on trigger device.

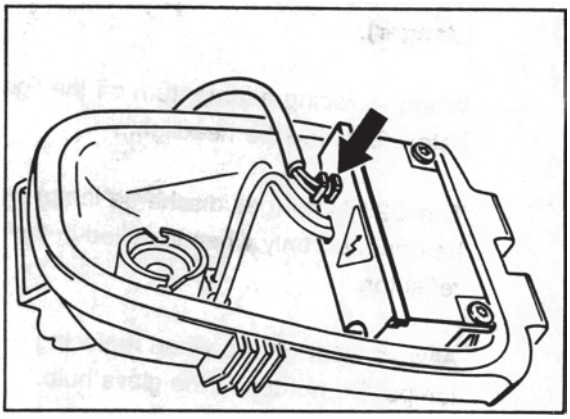

2230-94

3. Install lid with integrated trigger device of second headlight and check operation.

92 00 19 Removing and installing rear window wiper system

Removal

1. Disconnect and remove rear wiper arm. Take off cap and unscrew M 16 x 1 fastening nut. Remove plastic bushing. The rubber seal must remain in the rear window. **Do not** remove it.

2. Remove rear wall trim panel (4 screws) and cover for rear wiper motor (2 screws). Remove the sun blind motor in front of the wiper motor and place it on one side.

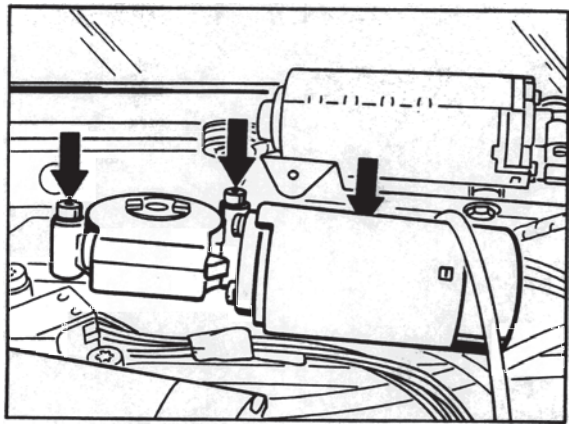

2251 - 92

3. Disconnect electrical connector from wiper motor. Unscrew and remove fastening screws (2 screws) of wiper system.

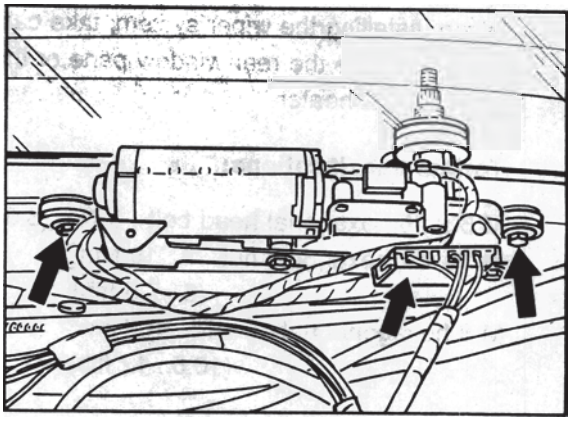

2252-92

4. Swing the wiper system up about 90 ° (the wiper motor points upwards) and carefully take it down out of the rear window (twisting it out).

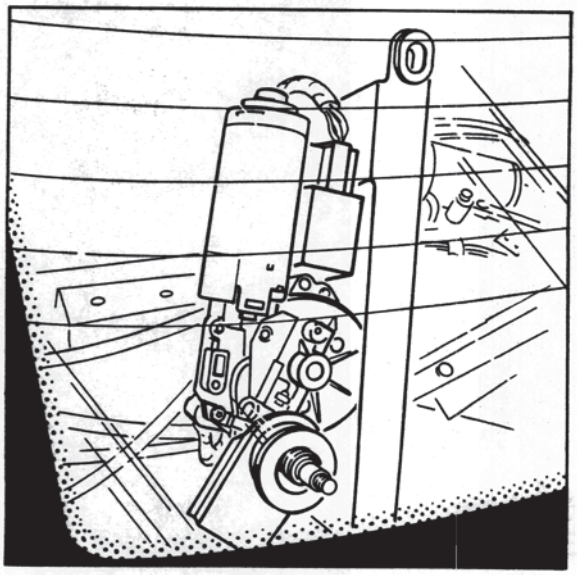

2253-92

Installation

When installing the wiper system, take care not to damage the rear window pane or the rear window heater.

Torque specifications:

M 6 x 25 hexagonal head bolt	9 Nm (6.6 ftlb)
M 16 x 1 hexagonal nut	8...10 Nm (6...7.5 ftlb)
M 8 hexagonal nut	14...16 Nm (10.5...12 ftlb)

Repair Manual

911 Carrera
(993)

Volume VII:
Wiring diagrams

Dr. Ing. h.c. F. Porsche Aktiengesellschaft

Volume I:	**Overall vehicle – General**	**0**
General	Maintenance, diagnosis	03
Engine		
	Engine	**1**
	Engine – Crankcase, mounting	10
	Engine – Crankshaft, pistons	13
	Engine – Cylinder head, valve drive	15
	Engine – Lubrication	17
	Engine – Cooling	19
	Fuel, exhaust system, engine electrical system	**2**
	Fuel supply, control	20
	Exhaust system – Turbocharging	21
	Fuel system, electronic injection	24
	Fuel system, K-Jetronic	25
	Exhaust system	26
	Starter, power supply, GRA	27
	Ignition system	28

Volume II:	**Transmission**	**3**
Transmission	Clutch, control	30
Manual transmission	Manual transmission – Controls, case	34
	Manual transmission – Gears, shafts, inner operation	35
	Final drive, differential, differential lock	39

Volume III:	**Transmission**	**3**
Transmission	Automatic transmission – Torque converter	32
Automatic	Automatic transmission – Controls, case	37
transmission	Automatic transmission – Gears, control	38
	Final drive, differential, differential lock	39

Volume IV:	**Chassis**	**4**
Chassis	Front wheel suspension, drive shaft	40
	Rear wheel suspension, drive shaft	42
	Wheels, tires, alignment	44
	Anti-Lock System (ABS)	45
	Brakes – Mechanical	46
	Brakes – Hydraulics, regulator, booster	47
	Steering	48

Volume V:	**Body**	**5**
Body	Body front section	50
	Body center section, roof, frame	51
	Body rear section	53
	Hoods, lids	55
	Front doors, Central Locking System	57
	Exterior body equipment	**6**
	Sunroof	60
	Soft top, hardtop	61
	Bumpers	63
	Glasses, window control	64
	Exterior equipment	66
	Interior equipment, passenger protection	68
	Interior body equipment	**7**
	Trim, insulation	70
	Seat frames	72
	Seat upholstery, covers	74
Volume VI:	**Air conditioning**	**8**
Air conditioning	Heater	80
Vehicle electrics	Ventilation	85
	Air conditioning	87
	Auxiliary air conditioning system	88
	Electrical system	**9**
	Instruments, alarm	90
	Radio, telephone, on-board computer	91
	Windshield wipers and washer	92
	Exterior lights, lamps, switches	94
	Interior lights, lamps, switches	96
Volume VII:	**Electrical system**	**9**
Wiring diagrams	Wiring	97
Volume VIII:	**Diagnosis**	**D**
Diagnosis	Self-diagnosis	03
	DME Diagnosis	24
	Tiptronic Diagnosis	37
	PDAS Diagnosis	39
	ABS Diagnosis	45
	Airbag Diagnosis	68
	Heater Diagnosis	80
	Alarm Diagnosis	90

Preface

Structure

The "Technical Literture" for the "911 Carrera (993)" model is basically structured as before, i.e. the structure follows the familiar repair groups.

A new feature is that the structure includes the main groups **0 to 9** and the main group **D**.

Main groups:	0	Complete vehicle – General
	1	Engine
	2	Fuel, exhaust, engine electrical system
	3	Transmission
	4	Chassis
	5	Body
	6	Body equipment, outside
	7	Body equipment, interior
	8	Air conditioning
	9	Electrical system
	D	Diagnosis

Layout

The layout in the below items remains unchanged throughout the repair manual

1. Table of tightening torques
2. Special tools required
3. Exploded views
4. Legends for the exploded views
5. Assembly notes / use of special tools

As a new feature, however, the former item 6 (Repair group diagnosis) is no longer filed in the volume corresponding to the respective repair group. The **Diagnosis test plans / diagnosis procedures** have been combined in a **separate Diagnosis volume** broken down according to the main groups 0 to 9.

Another new feature is that the contents of the "Service Information Technik" are indicated in the Repair Manual. This brochure concentrates on a description of the design and function of components and of the new features introduced for a particular model year.

Service Number

All major repair procedures and repair descriptions are identified by a two- or four-digit **Service Number** completed by two additional digits to identify the work that corresponds to the first six digits of the working position number in the Working Times and Damage Catalog.

Example: 30 37 37 Dismantling and assembling clutch control shaft

Explanation: **30** **37** **37** 50 (full working position number)

Repair group
here: Clutch, control

Component designation
here: Clutch control shaft

Activity
here: Dismantling and assembling

Index
here: Removed

Presentation in the various documents

30 37 37 50	Working position no. from **Working Times and Damage Catalog**, consisting of repair group, component designation, activity and index
30 37 37	Six-digit number in **Repair Manual**, consisting of repair group, component designation and activity
30 37	Service number in **Service Information**, consisting of repair group and component designation

Goal

The introduction of a service number in the "technical literature" is intended to facilitate standardization and positive identification to allow direct cross-referencing among the various documents. This is of particular importance with regard to the use of electronic media.

VII Wiring Diagrams

The Repair Manual of the 911 Carrera (993) also includes the 911 Carrera 4 manual (993 four-wheel drive). The 911 Carrera (993) is the basic model covered by the repair operations described in this Manual. "911 Carrera (993)" is also indicated in the header of each page.

Descriptions of repair operations that deviate for the 911 Carrera 4 will be included after the respective 911 Carrera section. The repair descriptions of both models are separated by a cover page. All pages included after the cover page (separation sheet) have the "911 Carrera 4" heading. To facilitate distinction, the page numbering will start with 100.

9 Electrical System

97 Wiring

97 90	Support, left-hand engine compartment side	97 - 01
97 97	Support, right-hand engine compartment side	97 - 02
97 09	Passenger compartment wiring harness	97 - 03
97 09 41	Repairing the passenger compartment wiring harness	97 - 05
97 16 41	Repairing the front-end wiring harness	97 - 07
97 09	Spare part - passenger compartment wire harness for Model '95	97 - 011
97 50 41	Repairing wire harness no. 173 (DME)	97 - 013
97 52	Engine wire harness	97 - 014
97 52	Spare part - passenger compartment wire harness for Model '96	97 - 015
97 09	Spare part - passenger compartment wire harness Model '96	97 - 017
97 09	Spare part - passenger compartment wire harness for Model '97	97 - 019
97	Wiring diagram 911 Carrera (993) model '94	97 - 1
97	Wiring diagram 911 Carrera (993) model '95	97 - 37
97	Wiring diagram 911 Carrera (993) model '96	97 - 77
97	Wiring diagram 911 Carrera (993) model '97/98	97 - 117

Printed in Germany - 22, 1997

Survey of contents of Service Information Technik '95

The Service Information gives a detailed description of the technical features of the new 911 Carrera.

	Rep. Gr.	Page
Engine		
General		1 - 1
Engine cross-sections	10	1 - 4
Full-load curve		1 - 6
Belt pulley	13	1 - 8
Pistons	13	1 - 10
Hydraulic valve lash adjuster	15	1 - 16
Setting the timing	15	1 - 18
USA - auxiliary air pump		1 - 19
Fuel and ignition systems		
General		2 - 1
DME - Schematic	24	2 - 2
Fuel - air flow	24	2 - 3
Exhaust gas flow	26	2 - 5
DME control unit 2.10.1	24	2 - 9
Mass air flow sensor	24	2 - 12
Throttle potentiometer	24	2 - 18
Ignition system	28	2 - 24
Plausibility test		2 - 28
Diagnosis		2 - 29
Auxiliary air pump	26	2 - 33
Power transmission		
Transmission	30	3 - 1
Clutch	30	3 - 2
Manual transmission	34	3 - 3
Transmission ratios		3 - 6
Gear set	35	3 - 8
Synchromesh	35	3 - 9
Final drive	39	3 - 13
Oil supply		3 - 15
Porsche Tiptronic	37	3 - 16
Modifications for the '95 model year		3 - 17

	Rep. Gr.	Page
Running gear		
General		4 - 1
Front axle	40	4 - 2
Steering	48	4 - 7
Rear axle	42	4 - 8
Elasto-kinematic toe correction	42	4 - 12
Coil springs (layout)	42	4 - 13
Wheels, tires	44	4 - 15
Suspension alignment	44	4 - 17
Brakes	47	4 - 20
Bleeding the brakes	47	4 - 23
ABS 5	45	4 - 24
Operation of the ABD	45	4 - 30
Diagnosis ABS/ABD	45	4 - 34
Body		
General		5 - 1
Constructional dimensions	50	5 - 4
Aerodynamics and air ducting	50	5 - 8
Body equipment		
Body equipment		6 - 1
Color scheme as of 1995 model year	60	6 - 1
Windows	64	6 - 8
Airbag system	68	6 - 14
Body - interior trim		
Body - interior trim	70	7 - 1
Seats	72	7 - 5
Heating, air conditioning, ventilation		
Particle filter	85	8 - 1
Air ducting	80	8 - 3
Heating - air conditioning unit	85	8 - 5
Heating - air conditioning unit	87	8 - 6
Series resistor of rear blower	80	8 - 9

	Rep. Gr.	Page
Electrical system		
Instruments	90	9 - 1
Alarm system/central locking system	90	9 - 3
Heated rear window	64	9 - 6
Central Information System (Z I)	91	9 - 7
Radio "Alpine 7807"	91	9 - 10
Sound package, DSP-System	91	
Windshield wiper and washer system	92	
Headlights	94	
Front end light cluster	94	
Tail lights	94	
Engine compartment baseplate	97	
Wiring diagram		
Summary		
Maintenance		0 - 1
Number ranges		0 - 4
Technical data		0 - 5

97 90 Support, left-hand engine compartment side

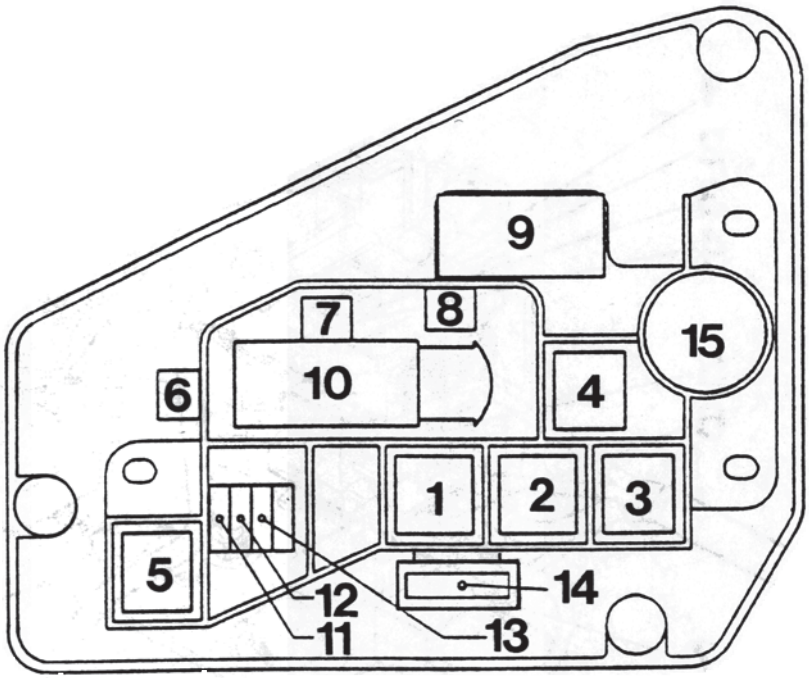

210

1 - Not used

2 - Relay, auxiliary air pump (USA/Canada only)

3 - Relay, AC compressor

4 - Relay, heated rear window

5 - Relay, heater blower

6 - Not used

7 - Connector, suppression capacitor

8 - Not used

9 - Connector, DME X 4/2, engine X3

10 - Connector, DME X 60

11 - Fuse, heater blower 30 A

12 - Fuse, rear window 25 A

13 - Fuse, AC compressor 7,5 A

14 - Fuse, auxiliary air pump 40 A

15 - Suppression capacitor

97 97 Support, ri ht-hand en ne ompartment side

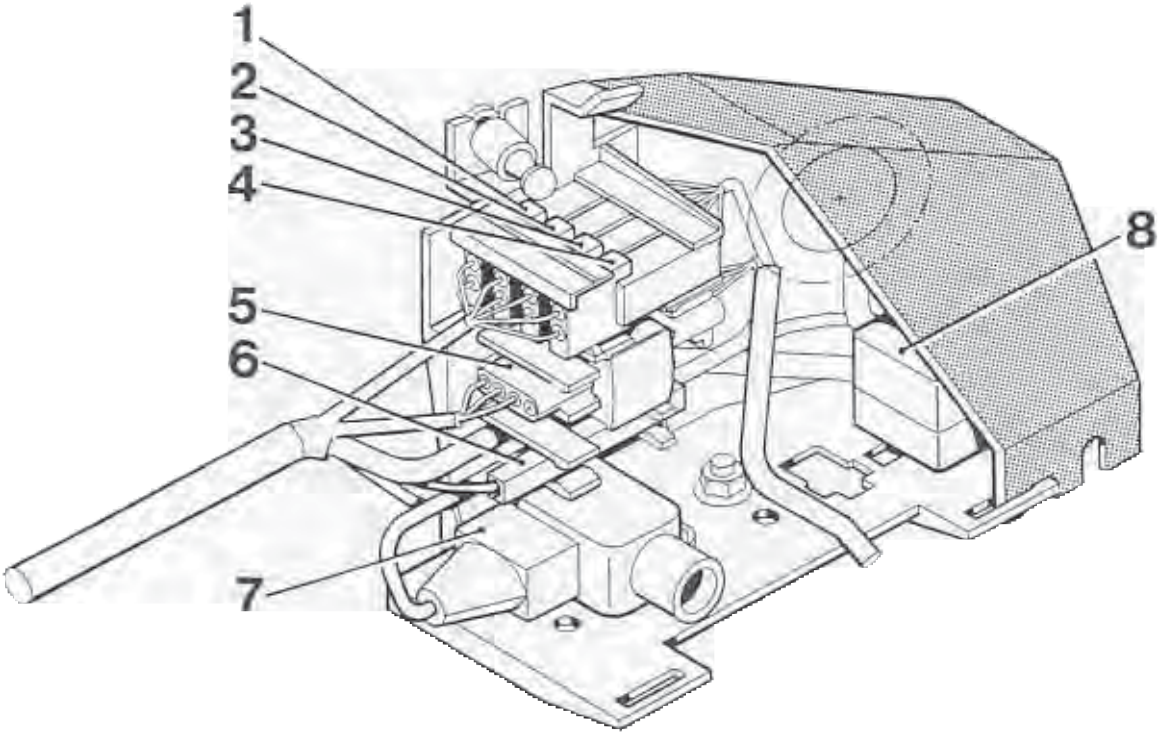

Oi level sender

Micro switc lock

T mperature sensor catalytic converte

Not

Oxyge senso CO potentiometer
vehicles fitted with catalytic converter)

AC compressor

CO potentiometer, for hicle not fitted
with catalytic rte

Rea hts

97 09 Passenger compartment wiring harness

Only one wiring harness is supplied worldwide for service. The following modifications are therefore required when replacing the wiring harness:

LHD vehicles

1. Connect jumper adapter 928. 615. 125. 00 to relay base R 34 on the Central Electrical System (not for Japan and USA/Canada vehicles).
   The foglight relay is retained on Japan and USA/Canada vehicles.

2. Disconnect coding jumper (in front of speedometer) on vehicles with 72-liter tank (wire color orange).

3. On vehicles fitted with anti-drive-off feature (M 530), the wires (0.5 sq.mm br/gn) for the driver door (X 11/1, pin 12) and passenger door (X 12/1, pin 11) connections must be unlatched, cut off and insulated.

4. On Tiptronic vehicles **without anti-drive-off feature,** the yellow-black wire (0.75 sq.mm) for the DME connection (X 4/1, pin 13) must be unlatched and soldered to pin 2 along with the black wire (2.5 sq.mm) (i.e. both wires soldered to pin 2).

5. On manual transmission vehicles **without anti-drive-off feature,** the jumper adapter 964. 610. 184. 00 must be connected on the relay base R 61 of the Central Electrical System.

6. On vehicles **without four-wheel drive**, the brown wire (0.5 sq.mm) must be unlatched from connector II (white) of the Central Information System (pin 24) and insulated.

7. On vehicles **without sound package,** radio connector II (speaker wires) must be separated from the booster adapter (8-pin connector ahead of radio) and connected to the radio.

8. Instead of the buzzer (443. 951. 307 B) of the light reminder, the gong relay (928. 618. 102. 03) must be fitted (already fitted on USA / Canada and Saudi-Arabia vehicles)

RHD vehicles

1. Connect jumper adapter 928. 615. 125. 00 to relay base R 34 on the Central Electrical System (not for Japan and USA/Canada vehicles).
   The foglight relay is retained on Japan and USA/Canada vehicles.

2. On vehicles **without four-wheel drive,** the brown wire (0.5 sq.mm) must be unlatched from connector II (white) of the Central Information System (pin 24) and insulated.

3. On vehicles **without sound package,** radio connector II (speaker wires) must be separated from the booster adapter (8-pin connector ahead of radio) and connected to the radio.

97 09 41 Repairing the passenger compartment wiring harness

Note

The ABS and brake pad wear indicator combination wires are integral parts of the wiring harness. When repairing damaged sections, the integral wires can be cut off and replaced with repair wires.

The passenger compartment wiring harness includes the rear left and right wires.

Run the following operational checks after completing the repair:

ABS: Check with system tester 9288.

Brake pad wear indicator: The lamp must go dim when the engine is running, provided that the pads are in good condition.

Joints

The joints for disconnecting the wiring are located inside the emergency seat pan on the left and right-hand sides ahead of the wire exit towards the outside.

1. Disconnect battery.
2. Fold emergency seat backrests forward.
3. Remove rear panel trim.
4. Tie damping mat out of the way with a strip of self-adhesive tape.

Note

Undo soft top motors on cabriolet vehicles (4 bolts).

5. Starting at the rubber grommets, cut insulating hose open along a length of approx. 20 mm towards the right.
6. Remove PVC insulating tape.
7. Remove shrink-fit caps from joints.
8. Cut off connectors.
9. Remove combination wires.
10. Fit repair wires from wheel carriers towards seat pan.
11. Strip wires along a length of 10 mm.
12. Connect wires according to table with crimp connectors and standard crimping tool (A).

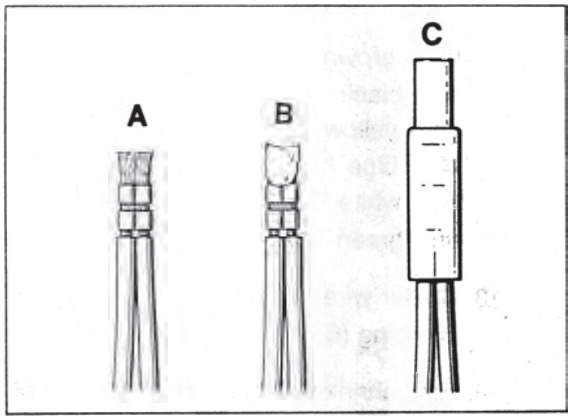

1316 - 97

Combination wire		Wiring harness
Color	**Length**	**Color**
		Rear left
br/sw	30 mm	br/sw
br/gn	60 mm	br/gn
br/ws	90 mm	ws*
br/bl	120 mm	shield
br	150 mm	br

* shielded wires

Combination wire		Wiring harness
Color	Length	Color
		Rear right
br/sw	30 mm	br/sw
br/gn	60 mm	br/gn
br/ws	90 mm	ge*
br/bl	120 mm	shield
br	150 mm	br

* shielded wires

br - brown
sw - black
ge - yellow
bl - blue
ws - white
gn - green

13. Solder wire tips after crimping (B).

14. Refit shrink-fit caps and shrink into place with hot air gun (C).

15. Wrap entire joint area with standard PVC tape.

Printed in Germany – VI,1994

97 16 41 Repairing the front-end wiring harness

Note

1916 - 97

The ABS and brake pad wear indicator combination wires are integral parts of the wiring harness. When repairing damaged sections, the integral wires can be cut off and replaced with repair wires.

The front-end wiring harness includes the front left and right wires.

Run the following operational checks after completing the repair:

ABS: Check with ABS tester.

Brake pad wear indicator: The lamp must go dim when the engine is running, provided that the pads are in good condition.

Joints

The joints for disconnecting the wiring are located on the right and left sides inside the luggage compartment above the side member near the strut towers.

Front right

1. Disconnect battery.
2. Remove right-hand front wheel
3. Remove rear wheel housing liner.
4. Undo tie-wrap in wheel housing area.
5. Undo tie-wrap in luggage compartment.

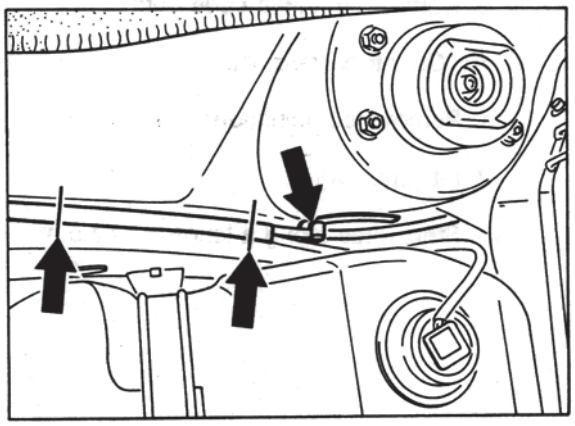

6. Cut insulating hose open at the wiring harness.
7. Remove PVC insulating tape.
8. Remove shrink-fit caps from joints.
9. Cut off connectors.
10. Remove combination wire.
11. Fit repair wire.
12. Strip wire along a length of 10 mm.
13. Connect wires according to table with crimp connectors and standard crimping tool (A).

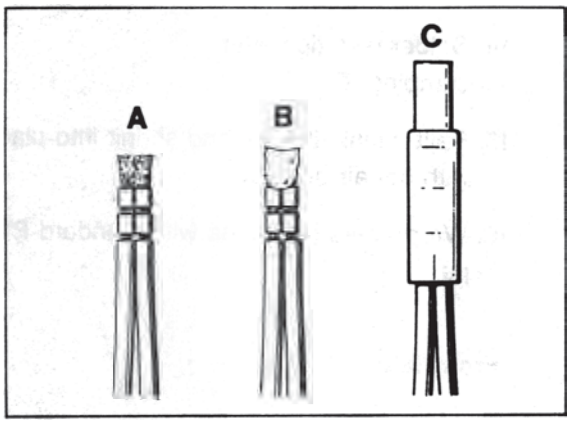

Combination wire		Wiring harness
Color	Length	Color
		Front right
br/sw	30 mm	br/sw
br/gn	60 mm	br/gn
br/ws	90 mm	gn*
br/bl	120 mm	shield
br	150 mm	br

* shielded wire

br - brown
sw - black
bl - blue
ws - white
gn - green

14. Solder wire tips after crimping (B).
15. Refit shrink-fit caps and shrink into place with hot air gun (C).
16. Wrap entire joint area with standard PVC tape.

Front left

1. Disconnect battery.
2. Remove left-hand front wheel
3. Remove rear wheel housing liner.
4. Undo tie-wrap in wheel housing area.
5. Remove bracket for brake fluid reservoir.

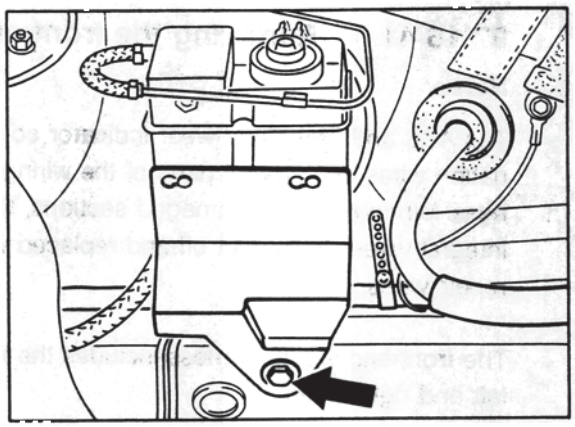

1917 - 97

6. Undo tie-wrap in luggage compartment.

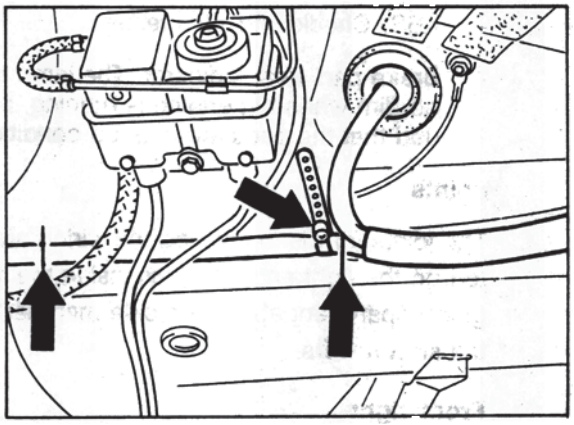

7. Cut insulating hose open at the wiring harness.
8. Remove PVC insulating tape.
9. Remove shrink-fit caps from joints.
10. Cut off connectors.
11. Remove combination wire.
12. Fit repair wire.
13. Strip wires along a length of 10 mm.

14. Connect wires according to table with crimp connectors and standard crimping tool (A).

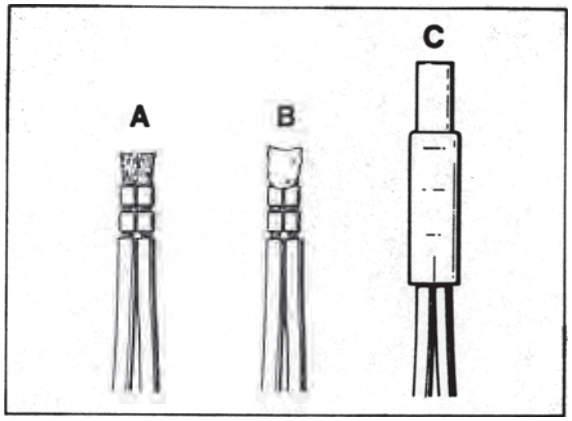

Combination wire		Wiring harness
Color	**Length**	**Color**
		Front left
br/sw	30 mm	br/sw
br/gn	60 mm	br/gn
br/ws	90 mm	rt*
br/bl	120 mm	shield
br	150 mm	br

* shielded wire

br - brown
sw - black
rt - red
bl - blue
ws - white
gn - green

15. Solder wire tips after crimping (B).

16. Refit shrink-fit caps and shrink into place with hot air gun (C).

17. Wrap entire joint area with standard PVC tape.

97 09 Spare part - passenger compartment wire harness for Model '95

World-wide, 8 wire harnesses are available as spare parts. When using this wire harness, the following modifications must therefore be made:

Left-hand drive vehicles, model '95

1. Insert jumper adapter 964.610.184.00 in relay socket R 34 on the central electrical system (not for Japan and USA/Canada vehicles).
   On Japan and USA/Canada vehicles, the foglight relay remains in position.

2. On Tiptronic vehicles **without immobilizer,** the wire (0.75 mm^2 yellow/black) on the immobilizer relay (R 61), pin 7, must be cut off about 80 mm ahead of the relay socket. The lead from relay pin 7 must then be crimped to the lead (4 mm^2, yellow) from pin 3 (double connection).
   See wiring diagram - section N 49 line (0.75 mm^2 yellow) "M 249 not M 530"

3. On manual vehicles **without immobilizer**, jumper adapter 964.610.184.00 must be inserted in relay socket R 61 on the central electrical system.

4. On vehicles **with immobilizer**, the lead (0.5 mm^2 orange/black) at connector X 4/2 pin 12 (double connection), must be cut off at the contact, insulated and tied up.

5. On vehicles **without four-wheel drive**, the lead (0.5 mm^2 brown) from connector II (white) on the central informer (Pin 24) must be unclipped and insulated.

6. On vehicles with small fuel tanks (approx. 71 l) the lead (0.5 mm^2 orange/black) from connector II (white) on the central informer (pin 26) must be unclipped and insulated.

7. On vehicles without **sound package**, radio connector II (loudspeaker lines) must be disconnected from the booster adapter (8-pin connector ahead of radio) and connected to the radio.

8. Instead of the buzzer (443.951.307 B) for the light warning, the gong relay (928.618.102.03) must be installed (already installed on vehicles for USA/Canada and Saudi Arabia).

97 09 Spare part - passenger compartment wire harness for Model '95

World-wide, 8 wire harnesses are available as spare parts. When using this wire harness, the following modifications must therefore be made:

Right-hand drive vehicles, model '95

1. Insert jumper adapter 964.610.184.00 in relay socket R 34 on the central electrical system.
   (not for Japan and USA/Canada vehicles).
   On Japan and USA/Canada vehicles, the foglight relay remains in position.

2. On Tiptronic vehicles **without immobilizer,** the wire (0.75 mm^2 yellow/black) on the immobilizer relay (R 61), pin 7, must be cut off about 80 mm ahead of the relay socket.
   The lead from relay pin 7 must then be crimped to the lead (4 mm^2, yellow) from pin 3 (double connection).
   See wiring diagram - section N 49 line (0.75 mm^2 yellow) "M 249 not M 530"

3. On manual vehicles **without immobilizer**, jumper adapter 964.610.184.00 must be inserted in relay socket R 61 on the central electrical system.

4. On vehicles **with immobilizer**, the lead (0.5 mm^2 orange/black) at connector X 4/2 pin 12 (double connection), must be cut off at the contact, insulated and tied up.

5. On vehicles **without four-wheel drive**, the lead (0.5 mm^2 brown) from connector II (white) on the central informer (Pin 24) must be unclipped and insulated.

6. On vehicles without **sound package**, radio connector II (loudspeaker lines) must be disconnected from the booster adapter (8-pin connector ahead of radio) and connected to the radio.

7. On vehicles **with sound package**, channels VR and VL and channels HR and HL must be interchanged at radio connector II (socket contact).
   1.5 mm^2 brown/black (Pin 6) must be interchanged with
   1.5 mm^2 brown/white (Pin 4)

   1.5 mm^2 black (Pin 5) must be interchanged with
   1.5 mm^2 white (Pin 3)

   1.5 mm^2 brown/red (Pin 2) must be interchanged with
   1.5 mm^2 brown/yellow (Pin 8)

   1.5 mm^2 red (Pin 1) must be interchanged with
   1.5 mm^2 yellow (Pin 7)

97 50 41 Repairing wire harness no. 173 (DME)

Note

As of model year 1996, knock sensors, speed senders and temperature sensors with optimized plug connections will be installed. In this case, the connector housing of older wire harnesses must be modified.

1. Cut wires right next to the old connector housing.

2. Push new sheaths onto each individual wire and insulate wires on a length of approx. 5 mm.

3. Use a crimping tool to crimp the connector contact and the sheath.

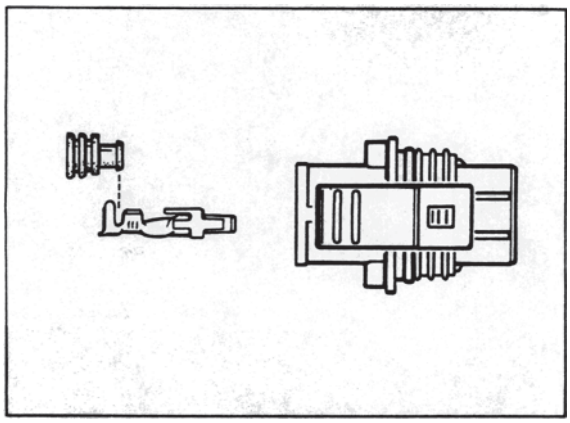

2309-97

4. As for the terminal assignment in the connector housing, the wiring diagram and the following table must be observed.

Knock sensors 1 and 2

Term. 1 - WS (white)
Term. 2 - BR (brown)
Term. 3 - Sheath

Speed sender

Term. 1 - WS (white)
Term. 2 - BR (brown)
Term. 3 - Sheath

Engine temperature sensor (NTC II)

Term. 1 - SW/RT (black/red)
Term. 2 - Dummy plug
Term. 3 - BR (brown)

5. Terminal 2 on the temperature sensor is not used and has to be fitted with a dummy plug.

Note

These optimized parts can also be installed in the 911 Carrera (964) as of model year 1989. The old connector housings of the DME wire harness must be replaced.

97 52 Engine wire harness

Note

The injection valves for cylinders 1 to 6 are no longer marked on the wire harness. Assignment is now based on the different colors of the connector housings.

Cylinder	Color of connector housing
1 and 4	white
2 and 5	brown
3 and 6	blue

97 09 Spare part - passenger compartment wire harness for Model '96

Remark

On Cabriolet and Targa vehicles, removing or installing the cable for the interior light and the passenger compartment monitoring sensor **below the A-pillar is impossible with the windshield installed**. In this case, cut off the passenger compartment wire harness (marked with yellow adhesive tape) before the instruments and as close to the main wire harness as possible.

When installing a new passenger compartment wire harness, cut off the wires behind the yellow adhesive tape and connect them to the vehicle's wires of the same color by soldering or crimping. Then insulate the wires thoroughly. New passenger compartment wire harness delivered by After-Sales always include lines for the passenger compartment monitoring system. Insulate these wires thoroughly if they are not used.

If the windshield has been removed or if the wire harness is installed in the A-pillar on vehicles without passenger compartment monitoring, cut off the 6-pin plug connection in the cutout for the light in the windshield frame. Then fit a flat receptacle N 17 480.5 and an insulating bushing 111.971.921 B to the brown, the brown/white and the red wire and connect these wires to the interior light. Insulate the yellow/red wire and the yellow/black wire thoroughly and tie them to the wire harness using tie-wraps.

Left-hand drive vehicles, model '96

1. Insert jumper adapter 964.610.184.00 in relay socket R 34 on the central electrical system (not for Japan and USA/Canada vehicles).
   On Japan and USA/Canada vehicles, the foglight relay remains in position.

2. On Tiptronic vehicles **without immobilizer,** the wire (0.75 mm^2 yellow/black) on the immobilizer relay (R 61), pin 7, must be cut off about 80 mm ahead of the relay socket. The lead from relay pin 7 must then be crimped to the lead (4 mm^2, yellow) from pin 3 (double connection).
   See wiring diagram - section N 49 line (0.75 mm^2 yellow) "M 249 not M 530"

3. On manual vehicles **without immobilizer**, jumper adapter 964.610.184.00 must be inserted in relay socket R 61 on the central electrical system.

4. On vehicles **with immobilizer**, the lead (0.5 mm^2 orange/black) at connector X 4/2 pin 12 (double connection), must be cut off at the contact, insulated and tied up.

5. On vehicles **without four-wheel drive**, the lead (0.5 mm^2 brown) from connector II (white) on the central informer (Pin 24) must be unclipped and insulated.

6. On vehicles with small fuel tanks (approx. 71 l) the lead (0.5 mm^2 orange/black) from connector II (white) on the central informer (pin 26) must be unclipped and insulated.

7. On vehicles without **sound package**, radio connector II (loudspeaker lines) must be disconnected from the booster adapter (8-pin connector ahead of radio) and connected to the radio.

8. Instead of the buzzer (443.951.307 B) for the light warning, the gong relay (928.618.102.03) must be installed (already installed on vehicles for USA/Canada and Saudi Arabia).

97 09 Spare part - passenger compartment wire harness for Model '96

Right-hand drive vehicles, model '96

1. Insert jumper adapter 964.610.184.00 in relay socket R 34 on the central electrical system.
   (not for Japan and USA/Canada vehicles).
   On Japan and USA/Canada vehicles, the foglight relay remains in position.

2. On Tiptronic vehicles **without immobilizer,** the wire (0.75 mm^2 yellow/black) on the immobilizer relay (R 61), pin 7, must be cut off about 80 mm ahead of the relay socket.
   The lead from relay pin 7 must then be crimped to the lead (4 mm^2, yellow) from pin 3 (double connection).
   See wiring diagram - section N 49 line (0.75 mm^2 yellow) "M 249 not M 530"

3. On manual vehicles **without immobilizer**, jumper adapter 964.610.184.00 must be inserted in relay socket R 61 on the central electrical system.

4. On vehicles **with immobilizer**, the lead (0.5 mm^2 orange/black) at connector X 4/2 pin 12 (double connection), must be cut off at the contact, insulated and tied up.

5. On vehicles **without four-wheel drive**, the lead (0.5 mm^2 brown) from connector II (white) on the central informer (Pin 24) must be unclipped and insulated.

6. On vehicles without **sound package**, radio connector II (loudspeaker lines) must be disconnected from the booster adapter (8-pin connector ahead of radio) and connected to the radio.

7. On vehicles **with sound package**, channels VR and VL and channels HR and HL must be interchanged at radio connector II (socket contact).
   1.5 mm^2 brown/black (Pin 6) must be interchanged with
   1.5 mm^2 brown/white (Pin 4)

   1.5 mm^2 black (Pin 5) must be interchanged with
   1.5 mm^2 white (Pin 3)

   1.5 mm^2 brown/red (Pin 2) must be interchanged with
   1.5 mm^2 brown/yellow (Pin 8)

   1.5 mm^2 red (Pin 1) must be interchanged with
   1.5 mm^2 yellow (Pin 7)

97 09 Spare part - passenger compartment wire harness for Model '96

Note

Supplement to Spare part-passenger compartment wire harness for Model '96, on Page 97 - 015 for left-hand drive vehicles or Page 97 - 016 for right-hand drive vehicles.

Left-hand drive vehicles, '96 model

1. In general, all unneeded tie-outs and connectors must be carefully tied in and secured against rattling when replacement harnesses are used.

2. On **Targa vehicles with telephone** (M615), the telephone antenna must be subsequently pulled through the central electrical system flange (toward luggage compartment). Excess length is accommodated in front of right-hand A-pillar.

3. On **Coupe vehicles with naturally aspirated engine**, the tie-out for the interior light and passenger compartment monitoring (left-hand A-pillar for Targa) must be tied back or cut off and insulated.

4. On **Targa vehicles**, the sliding-roof switch plug (2.5 sq. mm wire) – or the two plugs for glass roof and roller sun blind (each 3 x 0.5 sq. mm wire) on Coupe vehicles – must be tied back and secured against rattling.

5. Tie back excess length at rear spoiler switch (required on Targa with rear window wiper) if not used.

6. On **Coupe vehicles**, the excess length must be carefully tied back at the rear-wiper motor.

7. On **UST vehicles**, the rear-spoiler tie-out must be tied back at the right in the engine compartment.

8. On **Targa vehicles with manual transmission for the USA**, the two tied-in wires 0.5 YE/BK and 0.5 YE/RD on plug II of the alarm system control module must be swapped with the two wires of the same colour in ports II 24 and II 8.

9. On **Coupe and Targa vehicles with naturally aspirated engines for the USA**, the combination wire (ABS - BVA) must be routed through the heel plate at the rear left instead of through the seat well (like Turbo). Close off seat well bore with the old wiring harness grommet and sealant.

10. On **RS vehicles** (M003) with battery disconnection switch, the tied-in red 2.0 sq. mm wire must be swapped with the wire of the same colour at terminal 30 in the plug of the hazard warning light switch. Cut off contact at former wire and carefully insulate and tie in the wire.

11. On **UST vehicles** with large tank (90 l = M 545), the wire (0.5 BN) must be disconnected from pin 26 of plug II (white) in the central information system and insulated.

Right-hand drive vehicles, '96 model

1. In general, all unneeded tie-outs and connectors must be carefully tied in and secured against rattling when replacement harnesses are used.

2. On **Coupe vehicles with naturally aspirated engine**, the tie-out for the interior light and passenger compartment monitoring (left-hand A-pillar for Targa) must be tied back or cut off and insulated.

3. On **Targa vehicles**, the sliding-roof switch plug (2.5 sq. mm wire) – or the two plugs for glass roof and roller sun blind (each 3 x 0.5 sq. mm wire) on Coupe vehicles – must be tied back and secured against rattling.

4. Tie back excess length at rear spoiler switch (required on Targa with rear-window wiper) if not used.

5. On **Coupe vehicles**, the excess length must be carefully tied back at the rear-wiper motor.

6. On **UST vehicles**, the rear-spoiler tie-out must be tied back at the right in the engine compartment.

7. On **Targa vehicles with manual transmission for the USA**, the two tied-in wires 0.5 YE/BK and 0.5 YE/RD on plug II of the alarm system control module must be swapped with the two wires of the same colour in ports II 24 and II 8.

8. On **Coupe and Targa vehicles with naturally aspirated engine for the USA**, the combination wire (ABS - BVA) must be routed through the heel plate at the rear left instead of through the seat well (like Turbo). Close off seat well bore with the old wiring harness grommet and sealant.

9. On **RS vehicles** (M003) with battery disconnection switch, the tied-in red 2.0 sq. mm wire must be swapped with the wire of the same colour at terminal 30 in the plug of the hazard warning light switch. Cut off contact at former wire and carefully insulate and tie in the wire.

97 09 Spare part - passenger compartment wire harness for Model '97

Note

All conversion work described on Pages 97 - 015 to 97 - 018 for the spare part - passenger compartment wire harness for Model '96 also must be performed on the spare part - passenger compartment wire harness for Model '97. Four further conversion work steps are necessary for the model year '97.

Left-hand drive vehicles, '97 model

1. On **vehicles with DSP** (M680), the wire 0.5 WT/RD must be removed from port 1 of radio plug A (black) and insulated.

2. On **vehicles with telephone** (M615 or M618) in combination with sound package, the 2-pole connection wire BU and BU/BN in the centre console is connected to the amplifier instead of the loudspeaker.

3. On **LHD UST vehicles** (not 553), the plug interlock must be cut off and the two wires BN and BN/WT crimped or soldered together. Then insulate them carefully and tie in (starter function!!).

Right-hand drive vehicles, '97 model

1. On **vehicles with DSP** (M680), the wire 0.5 WT/RD must be removed from port 1 of radio plug A (black) and insulated.

Wiring Diagram Type 911 Carrera (993) Model 95

	Coordinates	
Sheet 1	1 - 10	Lights
Sheet 2	11 - 20	Alarm System, Central Locks, Mirror, Power Window Regulator, Inside Lights
Sheet 3	21 - 30	Heater, AC, Coolant Fan, Rear Window Defogger
Sheet 4	31 - 40	ABS, ABD
Sheet 5	41 - 50	Motor, Ignition, Cruise Control
Sheet 6	51 - 60	Instruments, Sensor, Central Informer, On-board computer
Sheet 7	61 - 70	Seats
Sheet 8	71 - 80	Rear Spoiler, Two-Tone Horns, Wipe- and Wash Cleaners, Sun Roof, Convertible Top
Sheet 9	81 - 90	Radio, Telephone
Sheet 10	91 - 100	Fog Light, Rear Fog Light
Sheet 11		Central Electric
Sheet 12	111 - 120	Airbag
Sheet 13	121 - 130	Tiptronic
Sheet 14	131 - 140	Ground Points
Sheet 15		Construction Components
Sheet 16		Plug Connections, M-Numbers, Abbreviations
Sheet 17	141 - 150	Code Lock

Wiring Diagram Type 911 Carrera (993) Model 95

The wiring diagram consists of 14 *individual wiring diagrams*, 1 sheet *construction components*, 1 sheet *plug connections* and 1 sheet *ground points*. These are divided into coordinate fields.

Each individual wiring diagram contains a part of the central-electrics box in a dashdotted frame.

This part of the central-electrics box shows all the lines and relays necessary for the individual wiring diagram.

The earth/ground points are identified by "GP" and their location is shown in a vehicle diagram.

The 10-pin connectors on the central-electrics box are clipped together out of 3 parts, the 20-pin connectors are clipped together out of 5 parts.

Part 1, with the moduled-on fastening lug, is the "starting element".

Parts 2,3 and 4 are "module elements".

The 10-pin connectors only contents one "module element".

Start- and module elements are identified by the numbers 1.....5.

Part 5 ist a "coding element".

The designations of the plug connections in the wiring diagram refer to the "starting element" from, for example, A 11.....15, and to the first module element from A 21.....25.

The connectors are identified by an X and a number.

Wherever wires branch to another page, the coordinates and, in certain cases, the terminal markings are indicated.

The input and output signals of control units are indicated by arrows.

The feed wire of wire joints is indicated by an arrow.

Printed in Germany – II, 1993

Wiring Diagram 911 Carrera (993) Model 95/2

	Coordinates	
Sheet 1	1 - 10	
Sheet 2	11 - 20	Alarm System, Central Locks, Mirror, Power Window Regulator, Inside Lights
Sheet 3	21 - 30	Heater, AC, Coolant Fan, Rear Window Defogger
Sheet 4 A	31 - 40	
Sheet 4 B	31 - 40	ABS (RS)
Sheet 5 A	41 - 50	Motor, Ignition, Cruise Control
Sheet 6	51 - 60	Instruments, Sensor, Central Informer, On-board computer
Sheet 7	61 - 70	
Sheet 8	71 - 80	Rear Spoiler, Two-Tone Horns, Wipe- and Wash Cleaners, Sun Roof, Convertible Top
Sheet 9	81 - 90	Radio, Telephone
Sheet 10	91 - 100	Fog Light, Rear Fog Light
Sheet 11	101 - 110	Code Lock
Sheet 12	111 - 120	Airbag
Sheet 13	121 - 130	Tiptronic
Sheet 14	131 - 140	Ground Points
Sheet 15		Construction Components
Sheet 16		Plug Connections, M-Numbers, Abbreviations
Sheet 17		Central Electric

For vehicles with V.I.N.s from WP0 AA2 99 1SS3 21454 and from WP0 CA2 99 8SS3 41225

Wiring Diagram 911 Carrera (993) Model 95/2

The wiring diagram consists of 15 *individual wiring diagrams*, 1 sheet *construction components*, 1 sheet *plug connections* and 1 sheet *ground points*. These are divided into coordinate fields.

Each individual wiring diagram contains a part of the central-electrics box in a dashdotted frame.

This part of the central-electrics box shows all the lines and relays necessary for the individual wiring diagram.

The earth/ground points are identified by "GP" and their location is shown in a vehicle diagram.

The 10-pin connectors on the central-electrics box are clipped together out of 3 parts, the 20-pin connectors are clipped together out of 5 parts.

Part 1, with the moduled-on fastening lug, is the "starting element".

Parts 2,3 and 4 are "module elements".

The 10-pin connectors only contents one "module element".

Start- and module elements are identified by the numbers 1 .5.

Part 5 ist a "coding element".

The designations of the plug connections in the wiring diagram refer to the "starting element" from, for example, A 11.....15, and to the first module element from A 21.....25.

The connectors are identified by an X and a number.

Wherever wires branch to another page, the coordinates and, in certain cases, the terminal markings are indicated.

The input and output signals of control units are indicated by arrows.

The feed wire of wire joints is indicated by an arrow.

911 Carerra (993) MODEL 95/2 SHEET 1

LIGHTS

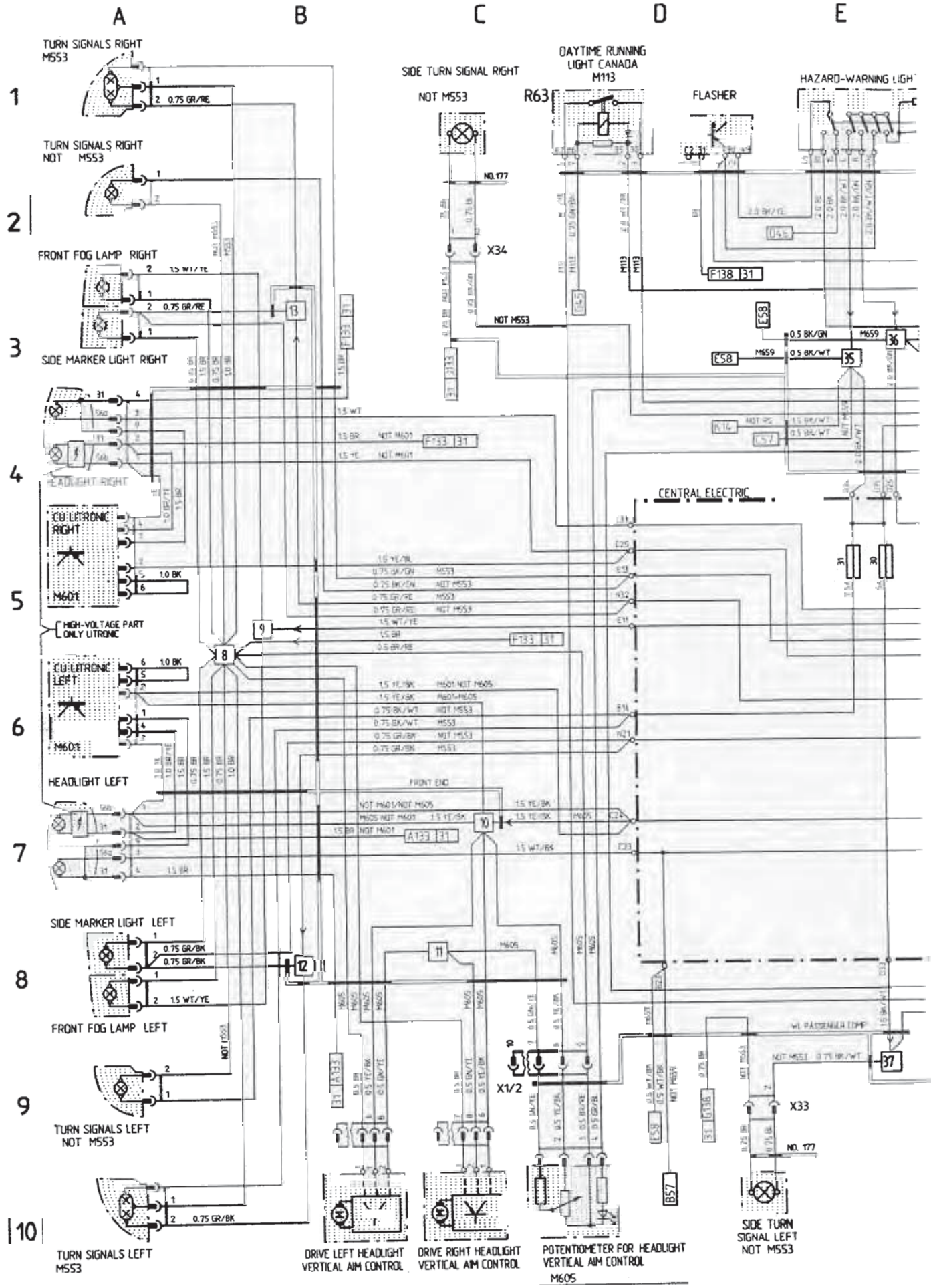

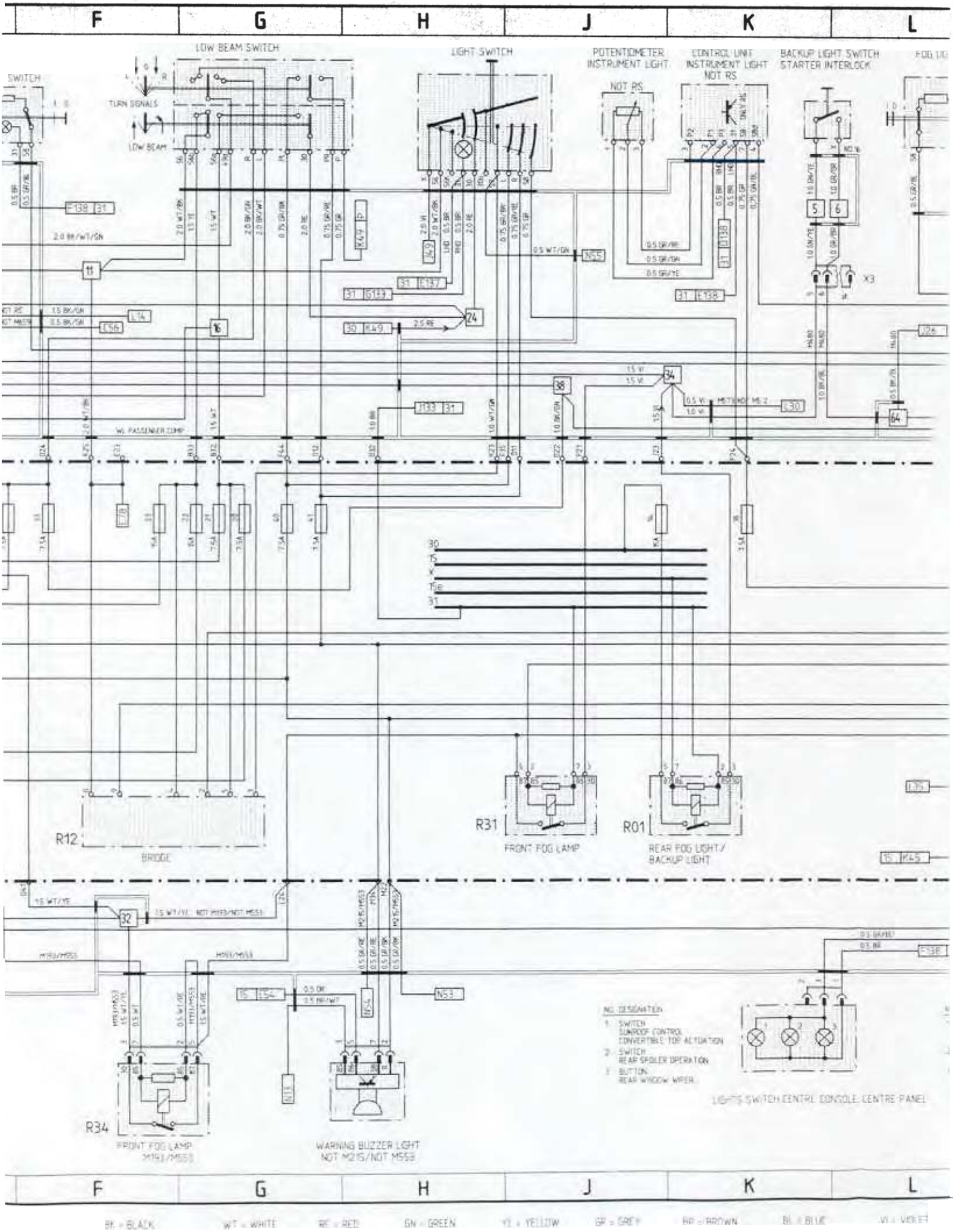
F
G
H
J
K
L
LOW BEAM SWITCH
LIGHT SWITCH
POTENTIOMETER INSTRUMENT LIGHT
NOT RS
CONTROL UNIT INSTRUMENT LIGHT
NOT RS
BACKUP LIGHT SWITCH
STARTER INTERLOCK
TURN SIGNALS
LOW BEAM
W. PASSENGER COMP.
R12
BRIDGE
R31
FRONT FOG LAMP
R01
REAR FOG LIGHT/
BACKUP LIGHT
R34
FRONT FOG LAMP
M193/M553
WARNING BUZZER LIGHT
NOT M215/NOT M553
NO. DESIGNATION
1 SWITCH
SUNROOF CONTROL
CONVERTIBLE TOP ACTUATION
2 SWITCH
REAR SPOILER OPERATION
3 BUTTON
REAR WINDOW WIPER
LIGHTS SWITCH CENTRE CONSOLE, CENTRE PANEL
BK = BLACK
WT = WHITE
RE = RED
GN = GREEN
YE = YELLOW
GR = GREY
BR = BROWN
BL = BLUE
VI = VIOLET

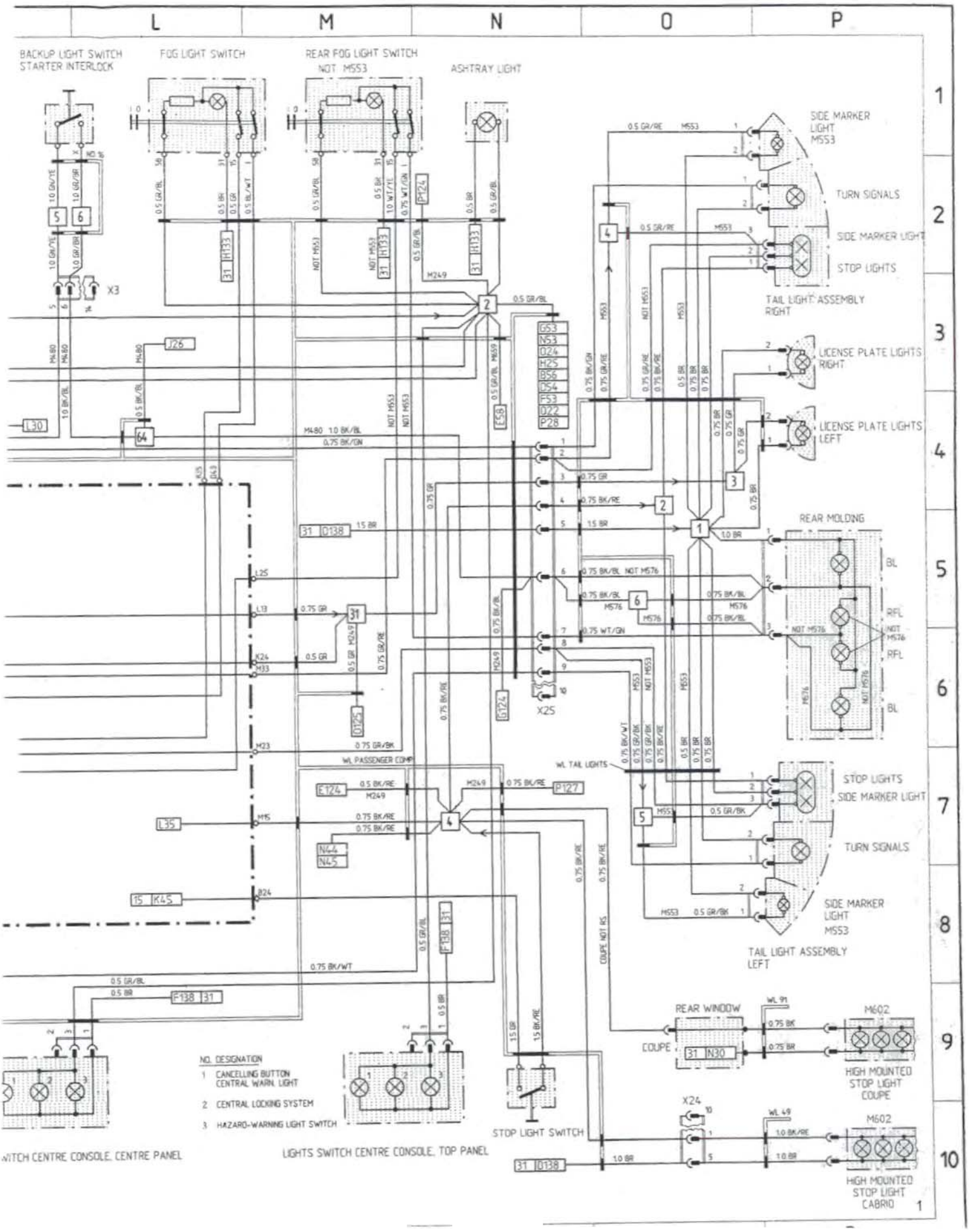
L
M
N
O
P
BACKUP LIGHT SWITCH
STARTER INTERLOCK
FOG LIGHT SWITCH
REAR FOG LIGHT SWITCH
NOT M553
ASHTRAY LIGHT
SIDE MARKER LIGHT M553
TURN SIGNALS
SIDE MARKER LIGHT
STOP LIGHTS
TAIL LIGHT ASSEMBLY RIGHT
LICENSE PLATE LIGHTS RIGHT
LICENSE PLATE LIGHTS LEFT
REAR MOLDING
STOP LIGHTS
SIDE MARKER LIGHT
TURN SIGNALS
SIDE MARKER LIGHT M553
TAIL LIGHT ASSEMBLY LEFT
REAR WINDOW
COUPE
HIGH MOUNTED STOP LIGHT COUPE
HIGH MOUNTED STOP LIGHT CABRIO
STOP LIGHT SWITCH
NO. DESIGNATION
1 CANCELLING BUTTON CENTRAL WARN. LIGHT
2 CENTRAL LOCKING SYSTEM
3 HAZARD-WARNING LIGHT SWITCH
LIGHTS SWITCH CENTRE CONSOLE, TOP PANEL

911 Carrera (993) MODEL 95/2 SHEET 2

SEATS, ALARM SYSTEM, CENTRAL LOCKS, MIRROR, POWER WINDOW REGULATOR, INSIDE LIGHTS

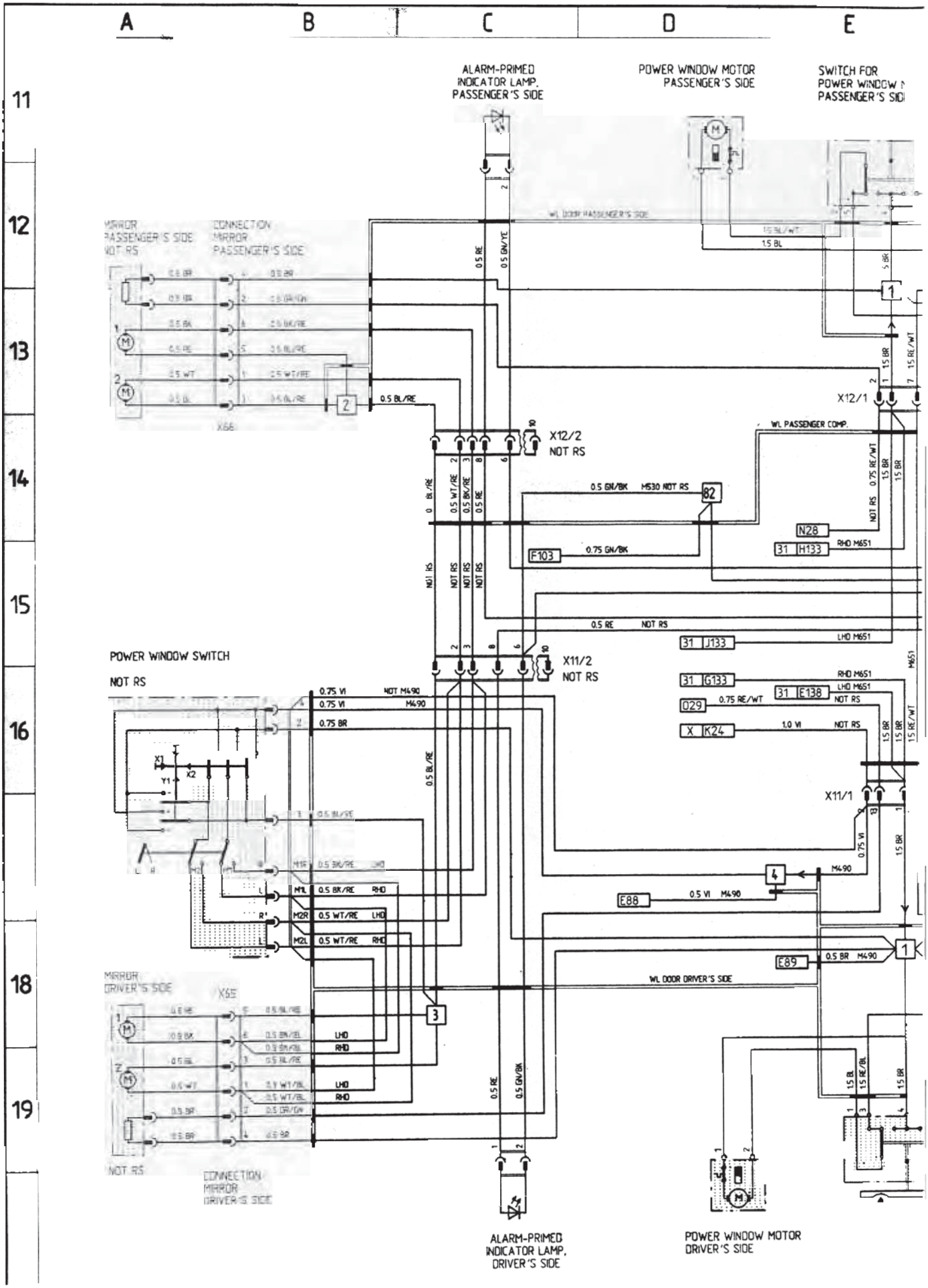

CONTROL UNIT ALARM SYSTEM/CENTRAL LOCKING S'

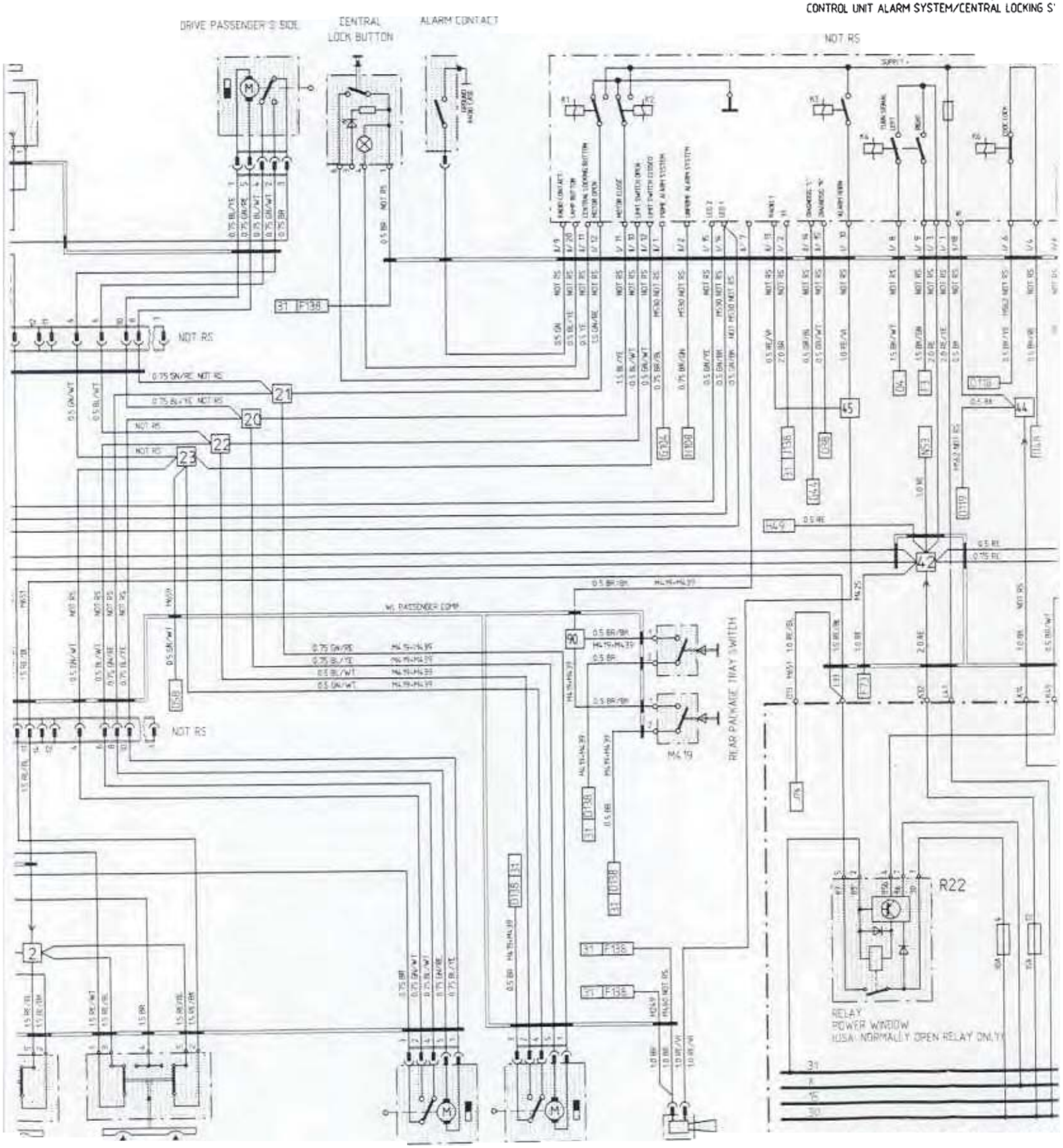

MOTOR

SWITCH FOR
POWER WINDOW MOTOR
PASSENGER'S SIDE

DRIVE DRIVER'S SIDE

DRIVE REAR
PACKAGE TRAY

BK = BLACK W' WHITE RE = RED GN = GREEN YE = YELLOW GR = GREY BR = BROWN BL = BLUE VI = VIOLE

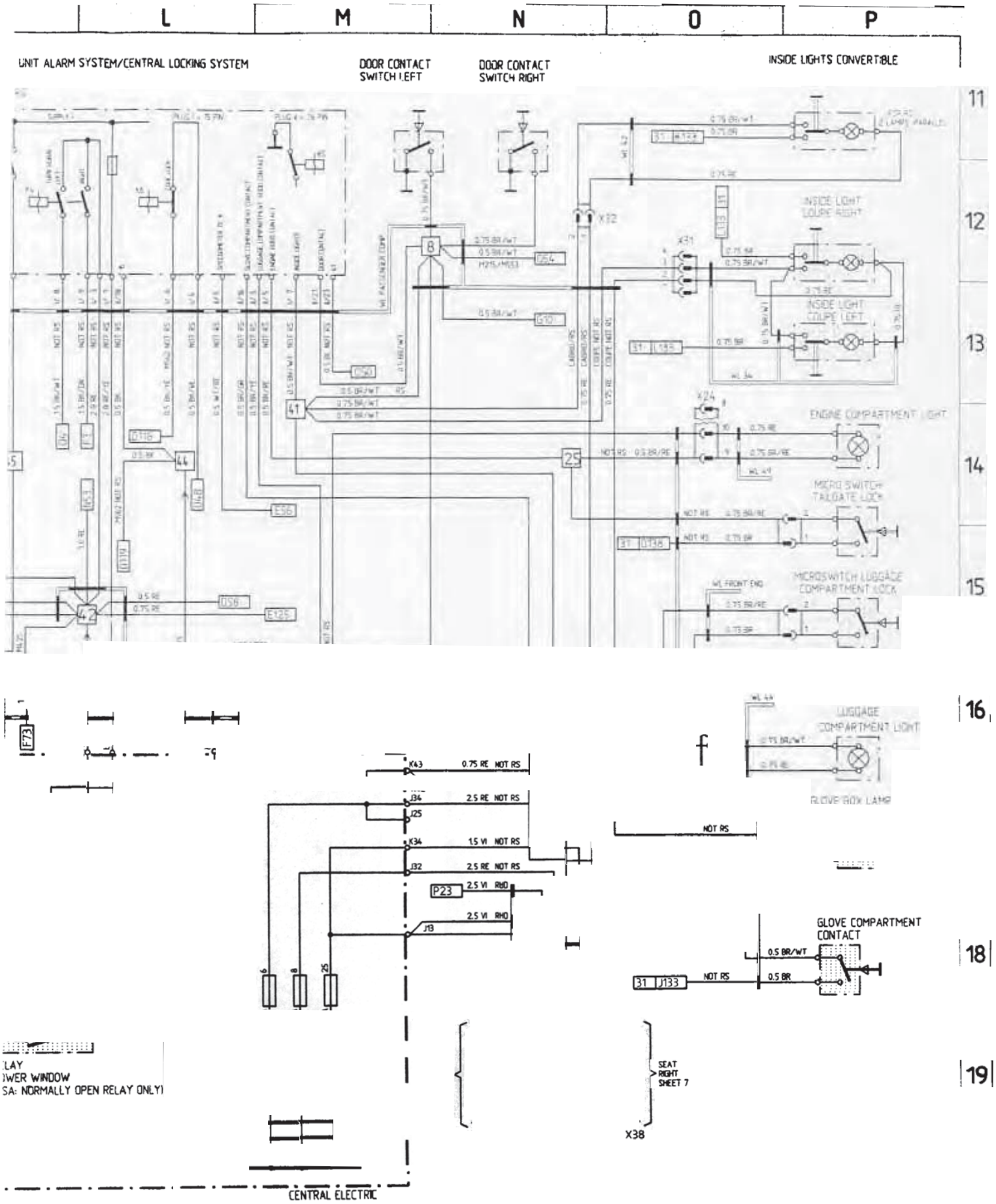
L
M
N
O
P
UNIT ALARM SYSTEM/CENTRAL LOCKING SYSTEM
DOOR CONTACT SWITCH LEFT
DOOR CONTACT SWITCH RIGHT
INSIDE LIGHTS CONVERTIBLE
11
12
13
14
15
16
18
19
INSIDE LIGHT COUPE RIGHT
INSIDE LIGHT COUPE LEFT
ENGINE COMPARTMENT LIGHT
MICRO SWITCH TAILGATE LOCK
MICROSWITCH LUGGAGE COMPARTMENT LOCK
LUGGAGE COMPARTMENT LIGHT
GLOVE BOX LAMP
GLOVE COMPARTMENT CONTACT
0.75 RE NOT RS
2.5 RE NOT RS
1.5 VI NOT RS
2.5 RE NOT RS
2.5 VI RHO
2.5 VI RHO
NOT RS
0.5 BR/WT
0.5 BR
SEAT RIGHT SHEET 7
X38
CENTRAL ELECTRIC
LAY
WER WINDOW
SA: NORMALLY OPEN RELAY ONLY)

911 Carrera (993) MODEL 95/2 SHEET 3

HEATER / AC

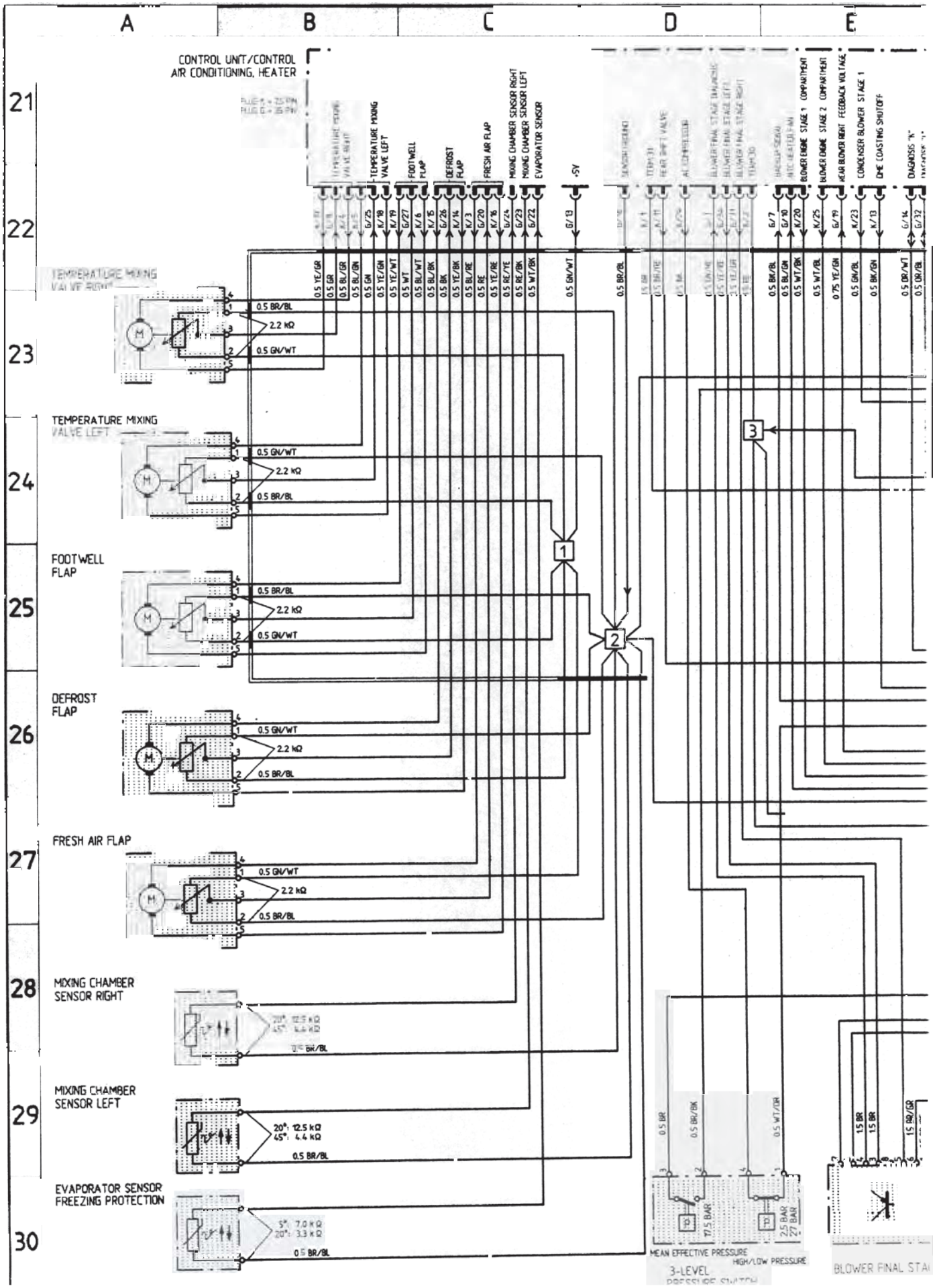

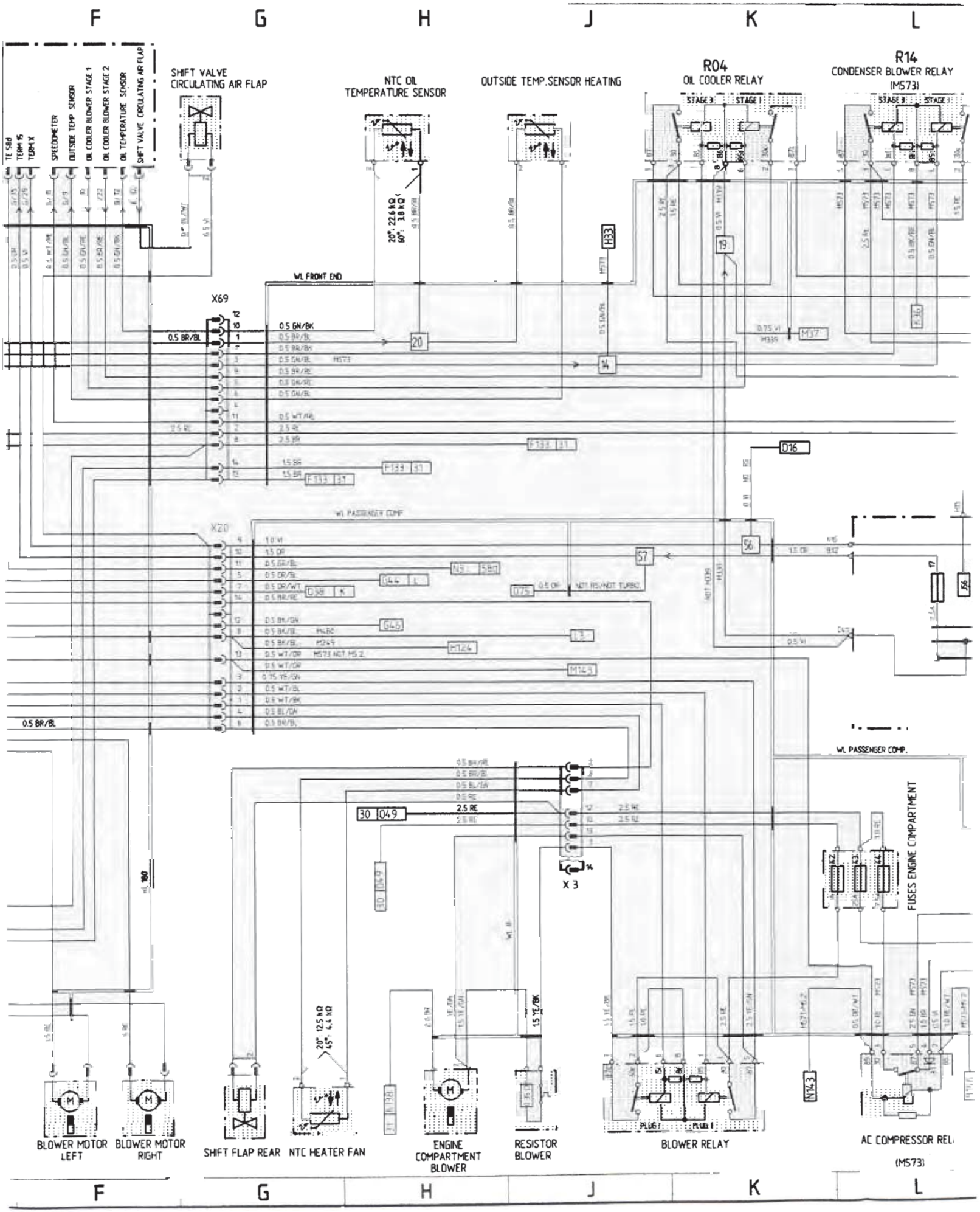

GR = GREY BR = BROWN BL = BLUE VI = VIOLE PK

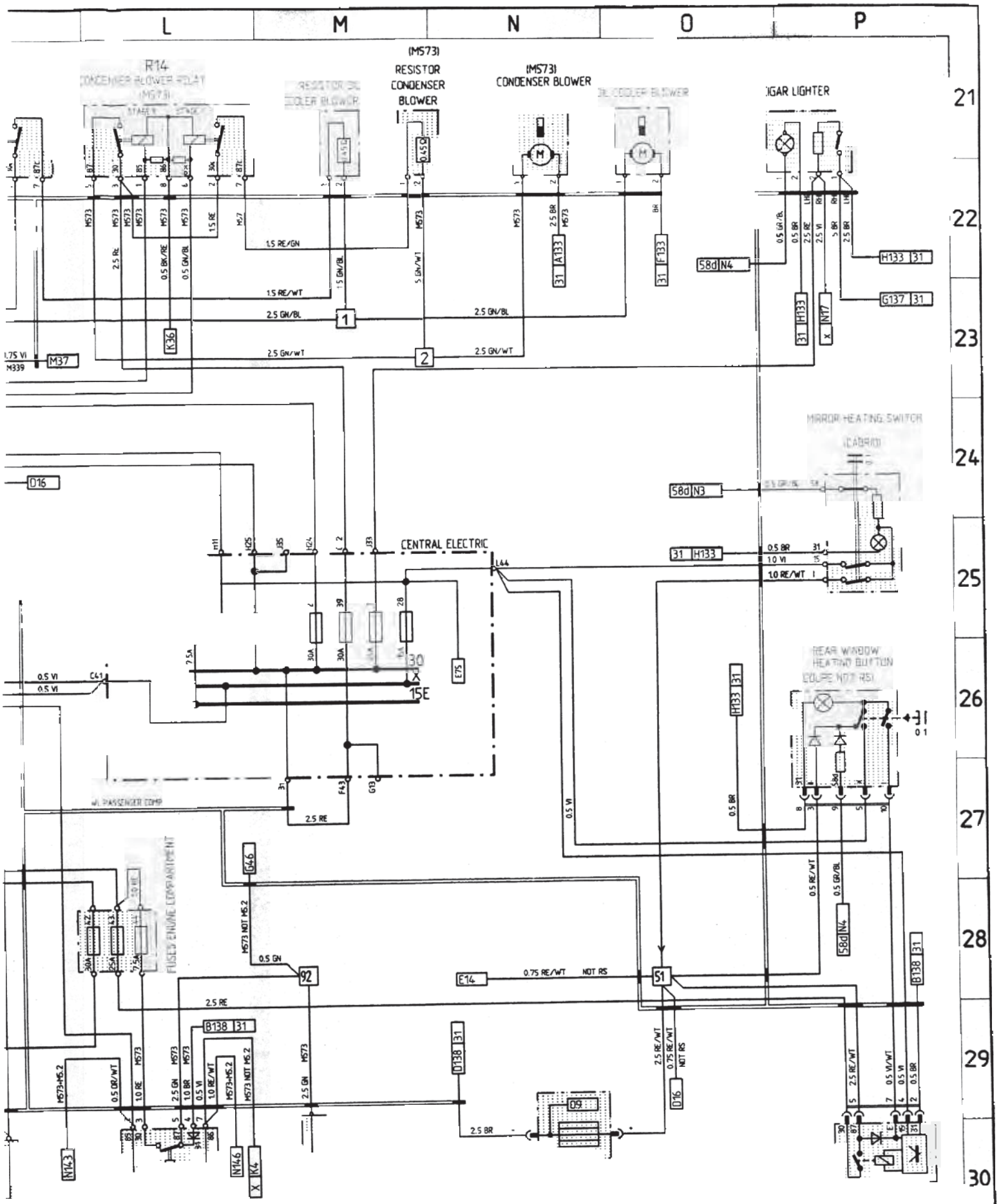
L
M
N
O
P
21
22
23
24
25
26
27
28
29
30
R14
(M573)
RESISTOR CONDENSER BLOWER
(M573) CONDENSER BLOWER
CIGAR LIGHTER
MIRROR HEATING SWITCH
CENTRAL ELECTRIC
REAR WINDOW HEATING BUTTON
FUSES ENGINE COMPARTMENT
W. PASSENGER COMP
M37
K36
D16
C41
E75
G46
92
51
E14
0.75 RE/WT
NOT RS
B138 31
D138 31
D9
N143
N146
K4
H133 31
G137 31
N17
A133
F133
58d N4
58d N3
31 H133
0.5 BR
1.0 VI
1.0 RE/WT
30
15E
2.5 GN/BL
2.5 GN/WT
1.5 RE/GN
1.5 RE/WT
2.5 RE
2.5 BR

911 Carrera 993) MODEL 95/2 SHEET 4 A

ABS

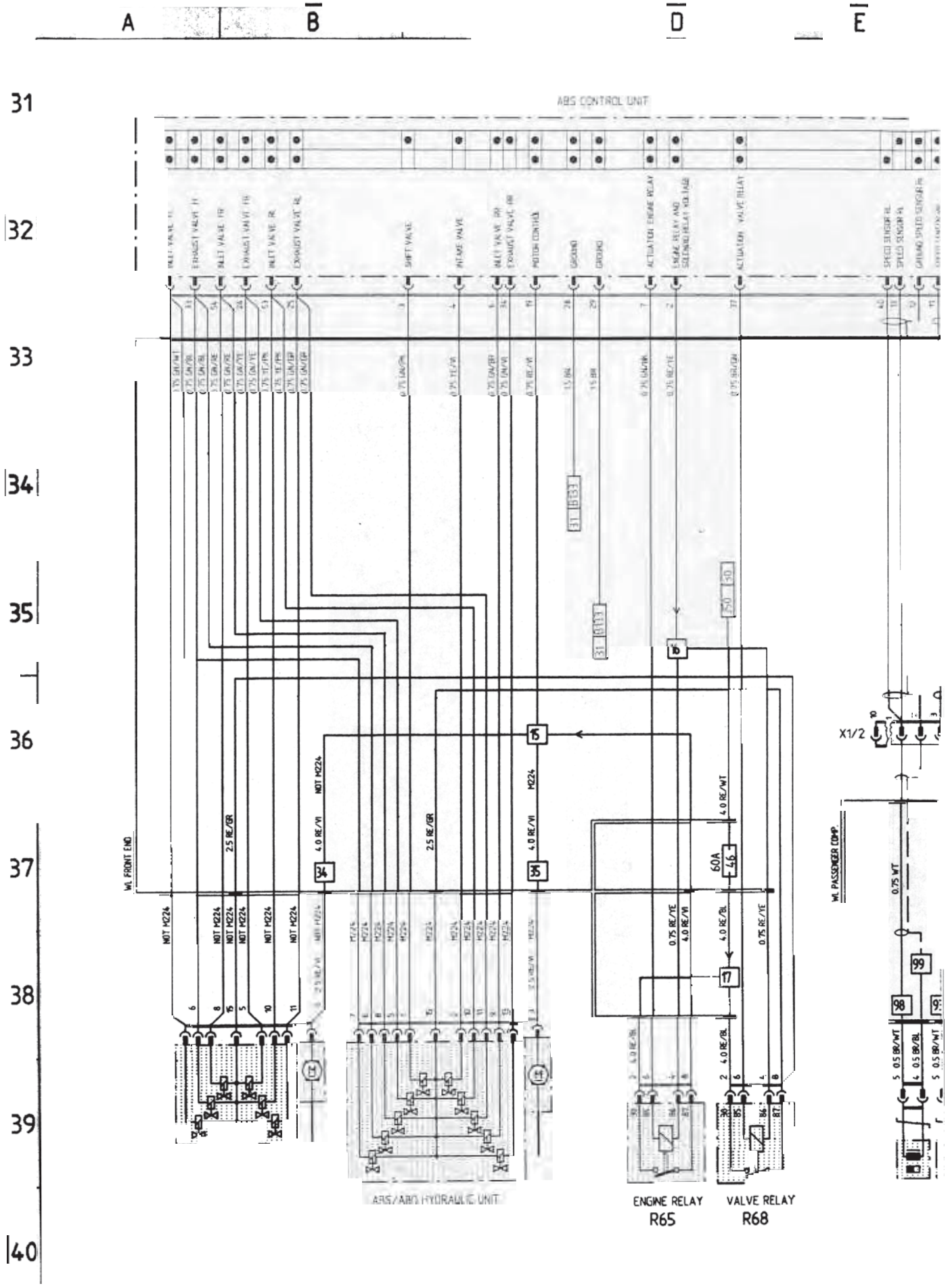

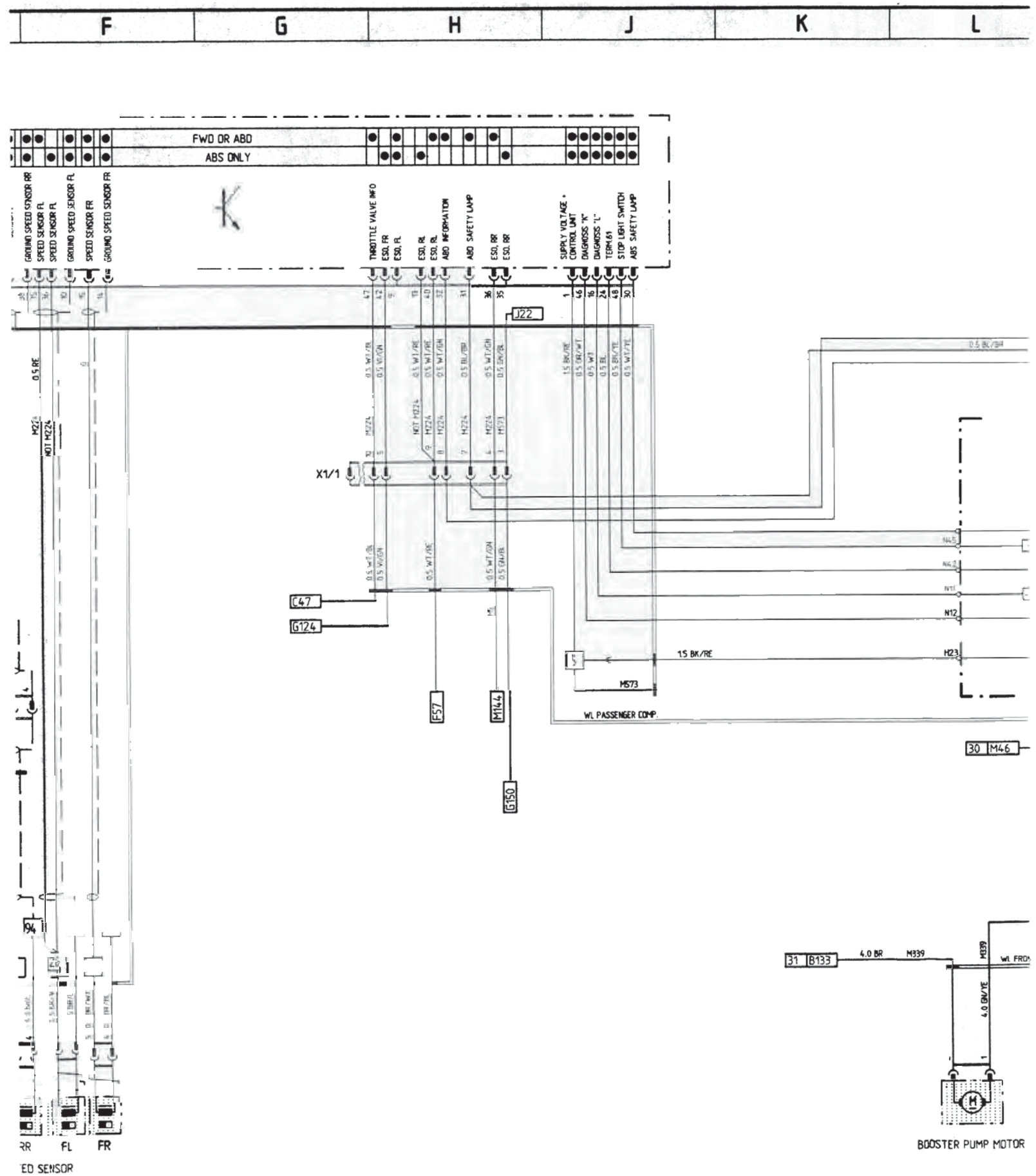
F
G
H
J
K
L
FWD OR ABD
ABS ONLY
GROUND SPEED SENSOR RR
SPEED SENSOR FL
SPEED SENSOR FL
GROUND SPEED SENSOR FL
SPEED SENSOR FR
GROUND SPEED SENSOR FR
THROTTLE VALVE INFO
ESO, FR
ESO, FL
ESO, RL
ESO, RL
ABD INFORMATION
ABD SAFETY LAMP
ESO, RR
ESO, RR
SUPPLY VOLTAGE + CONTROL UNIT
DIAGNOSIS "K"
DIAGNOSIS "L"
TERM.61
STOP LIGHT SWITCH
ABS SAFETY LAMP
J22
X1/1
C47
G124
F57
M144
G150
M573
WL PASSENGER COMP.
30 M46
31 B133
4.0 BR
M339
4.0 GN/YE
BOOSTER PUMP MOTOR
RR
FL
FR
ED SENSOR
WT = WHITE
RE = RED
GN = GREEN
YE = YELLOW
GR = GREY
BR = BROWN
BL = BLUE
VI = VIOLET

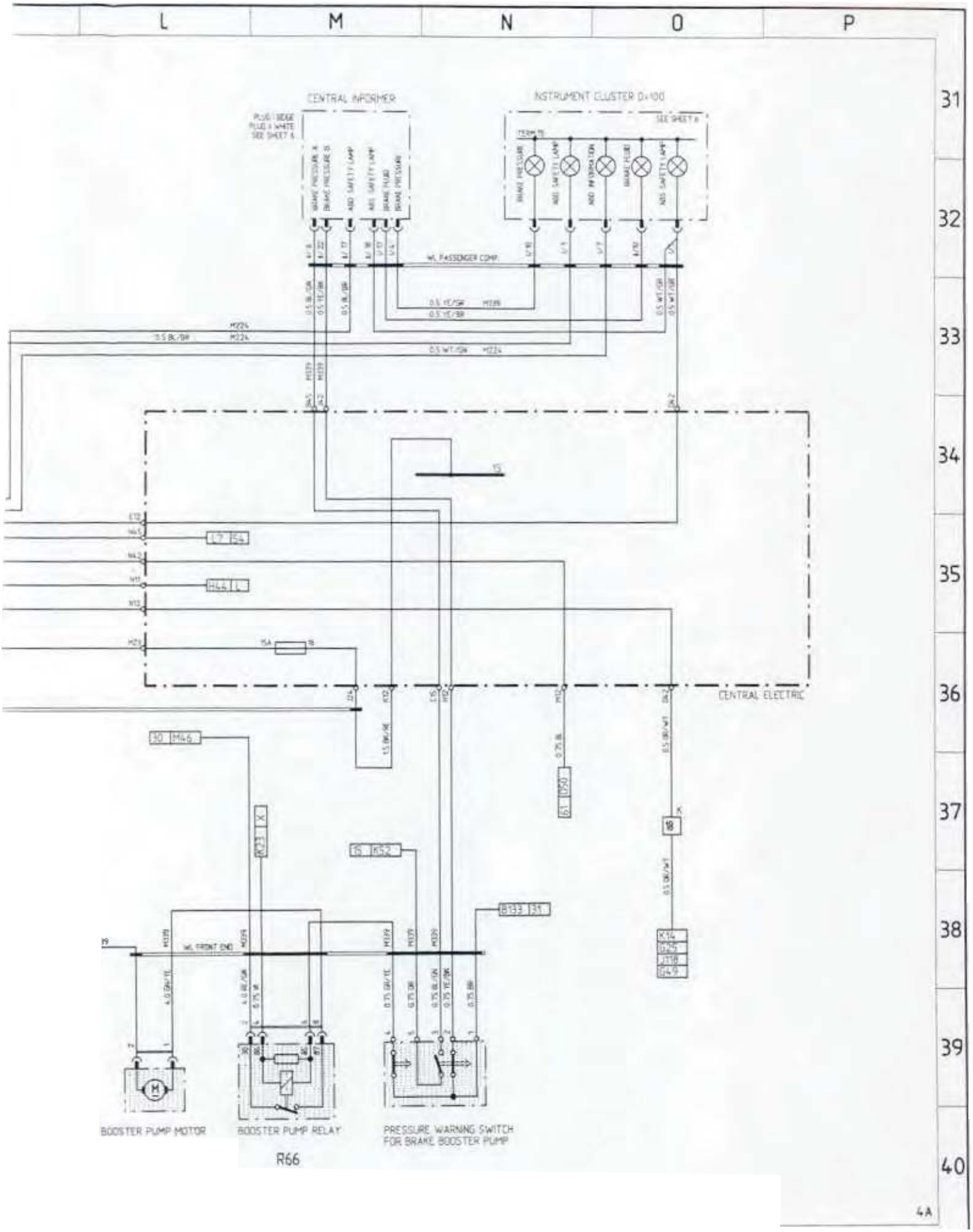
L
M
N
O
P
31
32
33
34
35
36
37
38
39
40
CENTRAL INFORMER
INSTRUMENT CLUSTER D+100
WL PASSENGER COMP.
CENTRAL ELECTRIC
WL FRONT END
BOOSTER PUMP MOTOR
BOOSTER PUMP RELAY
PRESSURE WARNING SWITCH
FOR BRAKE BOOSTER PUMP
R66
4A

911 Carrera (993) MODEL 95/2 SHEET 4B

ABS (RS)

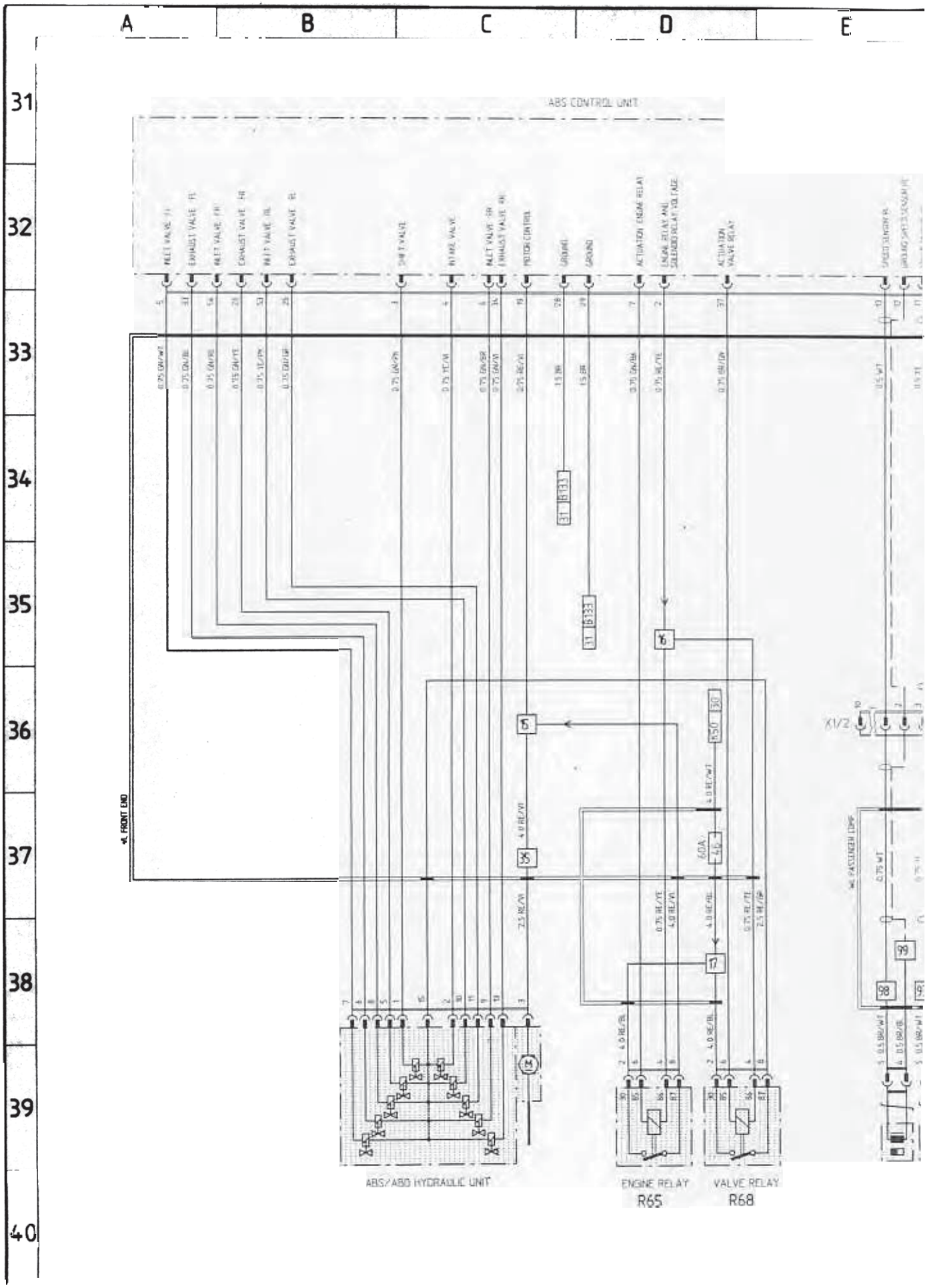

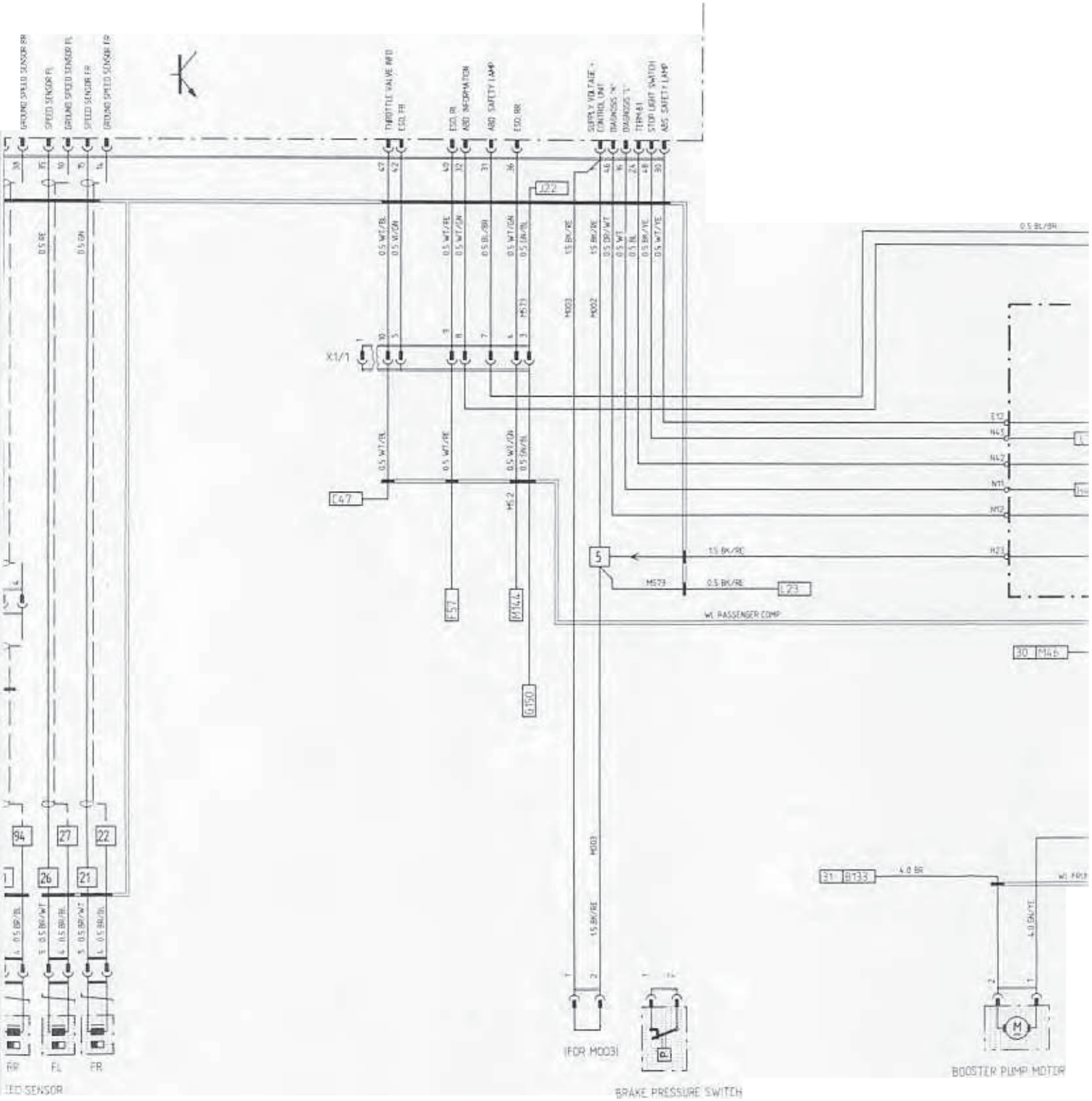

F	G	H	J	K	L

BK = BLACK WT = WHITE RE = RED GN = GREEN YE = YELLOW GR = GREY BR = BROWN BL = BLUE VI = VIOLET

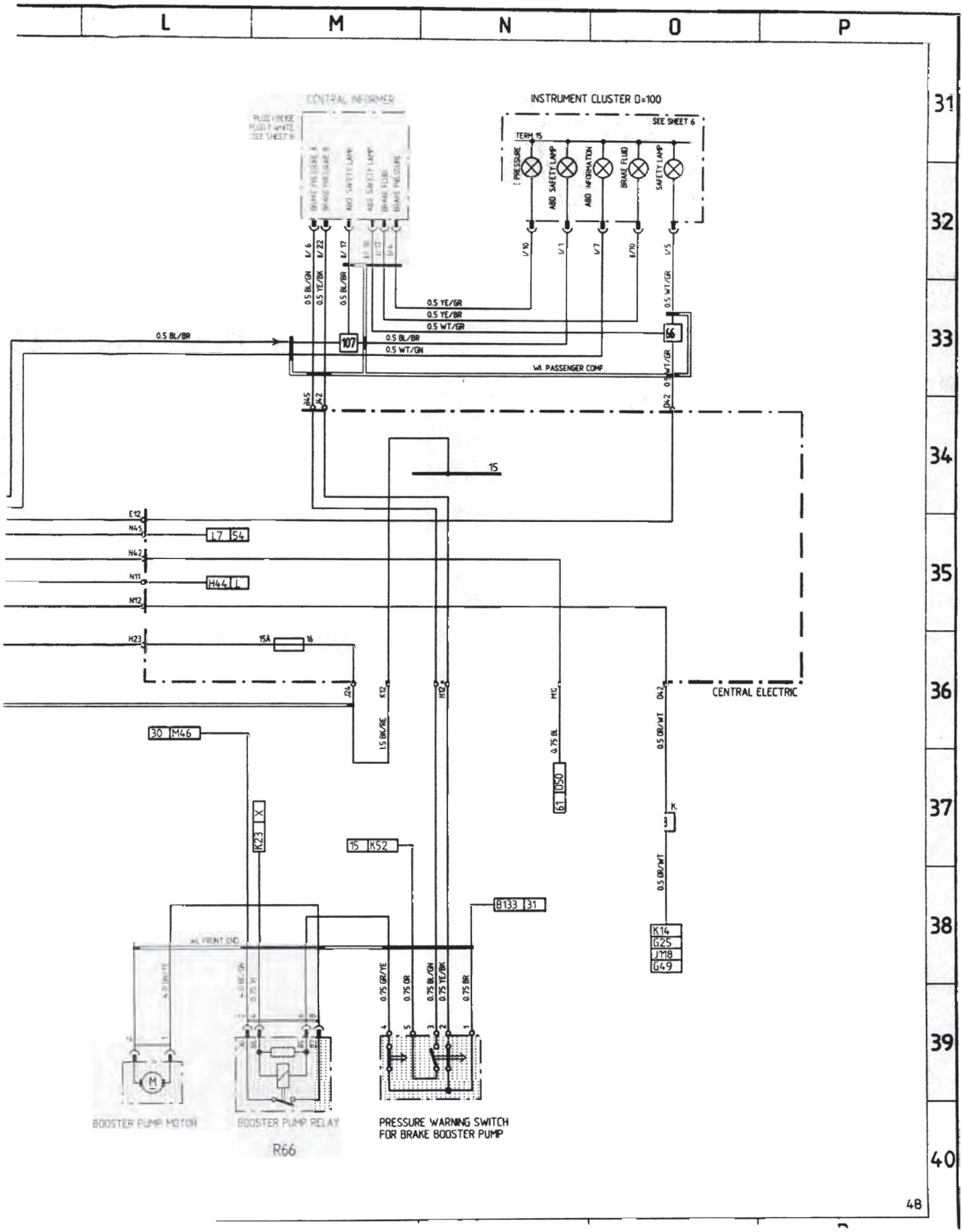
L
M
N
O
P
31
32
33
34
35
36
37
38
39
40
CENTRAL INFORMER
INSTRUMENT CLUSTER D=100
SEE SHEET 6
TERM 15
PRESSURE
ABD SAFETY LAMP
ABD INFORMATION
BRAKE FLUID
SAFETY LAMP
0.5 BL/GN
0.5 YE/BK
0.5 BL/BR
0.5 YE/GR
0.5 YE/BR
0.5 WT/GR
0.5 BL/BR
0.5 WT/GN
0.5 WT/GR
WL PASSENGER COMP.
107
66
15
E12
N45
L7 54
N42
N11
H44 1
N12
H23
15A
16
J24
K12
H12
H11
D42
CENTRAL ELECTRIC
1.5 BK/RE
0.75 BL
0.5 OR/WT
30 M46
61 D50
K23 X
15 K52
B133 31
K14
G25
J178
G49
WL FRONT END
0.75 GR/YE
0.75 OR
0.75 BL/GN
0.75 YE/BK
0.75 BR
BOOSTER PUMP MOTOR
BOOSTER PUMP RELAY
R66
PRESSURE WARNING SWITCH
FOR BRAKE BOOSTER PUMP

911 Carrera (993) MODEL 95/2 SHEET 5 A

ENGINE ELECTRICS M2.10, FUEL, IGNITION SYSTEM, CRUISE CONTROL

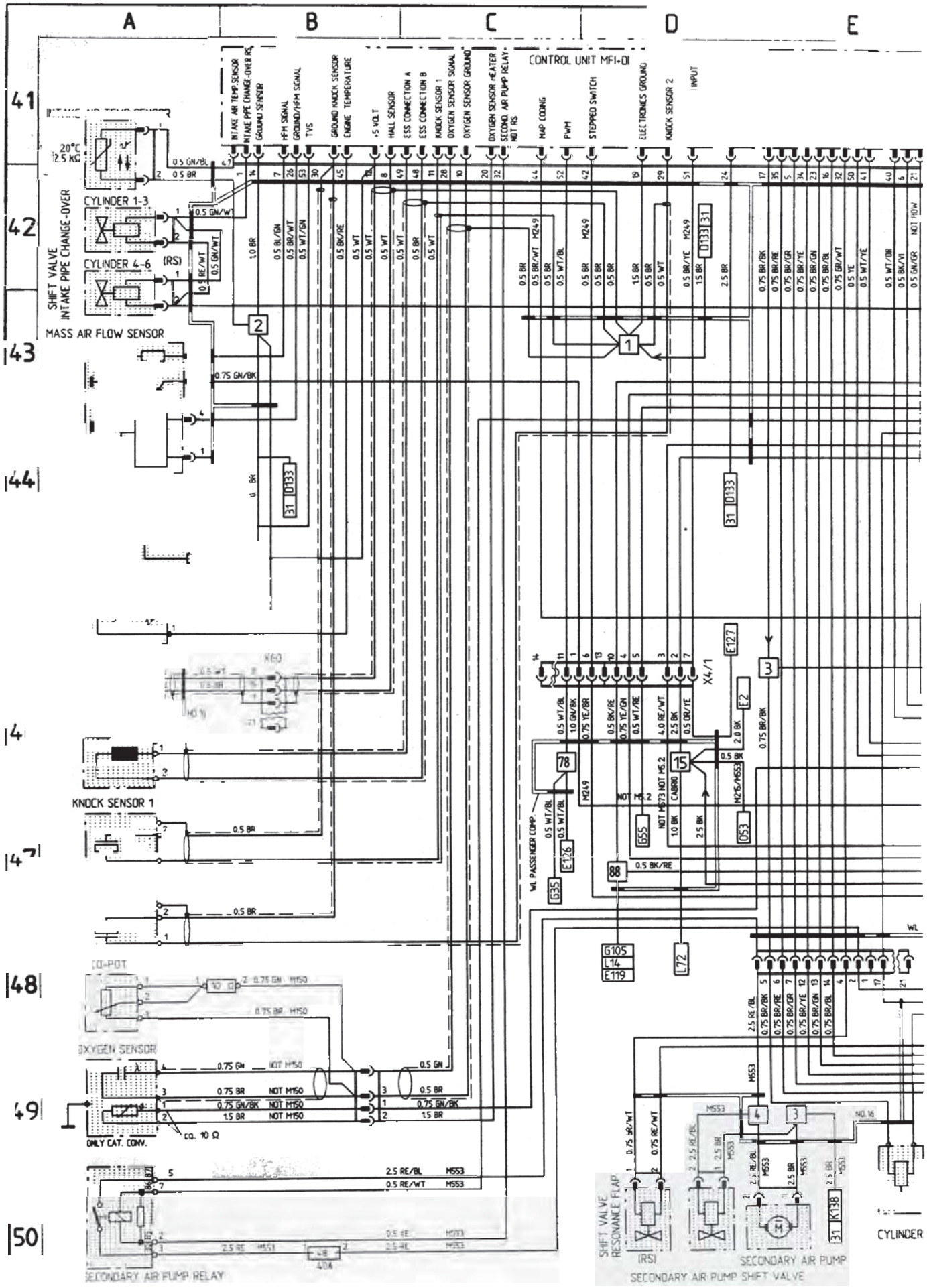

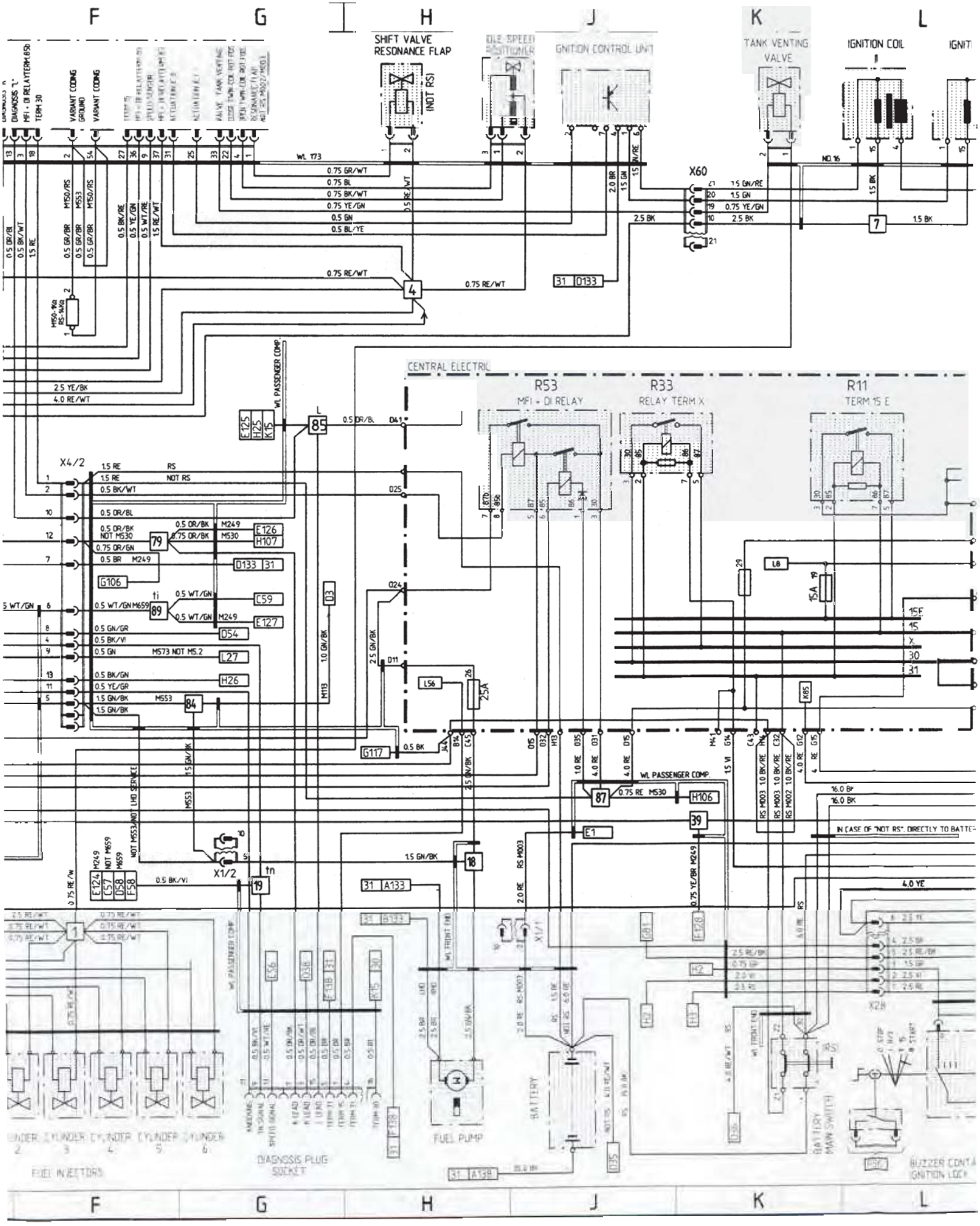

WHITE RE = RED GN = GREEN YELLOW GR = GREY BR = BROWN VIOLET

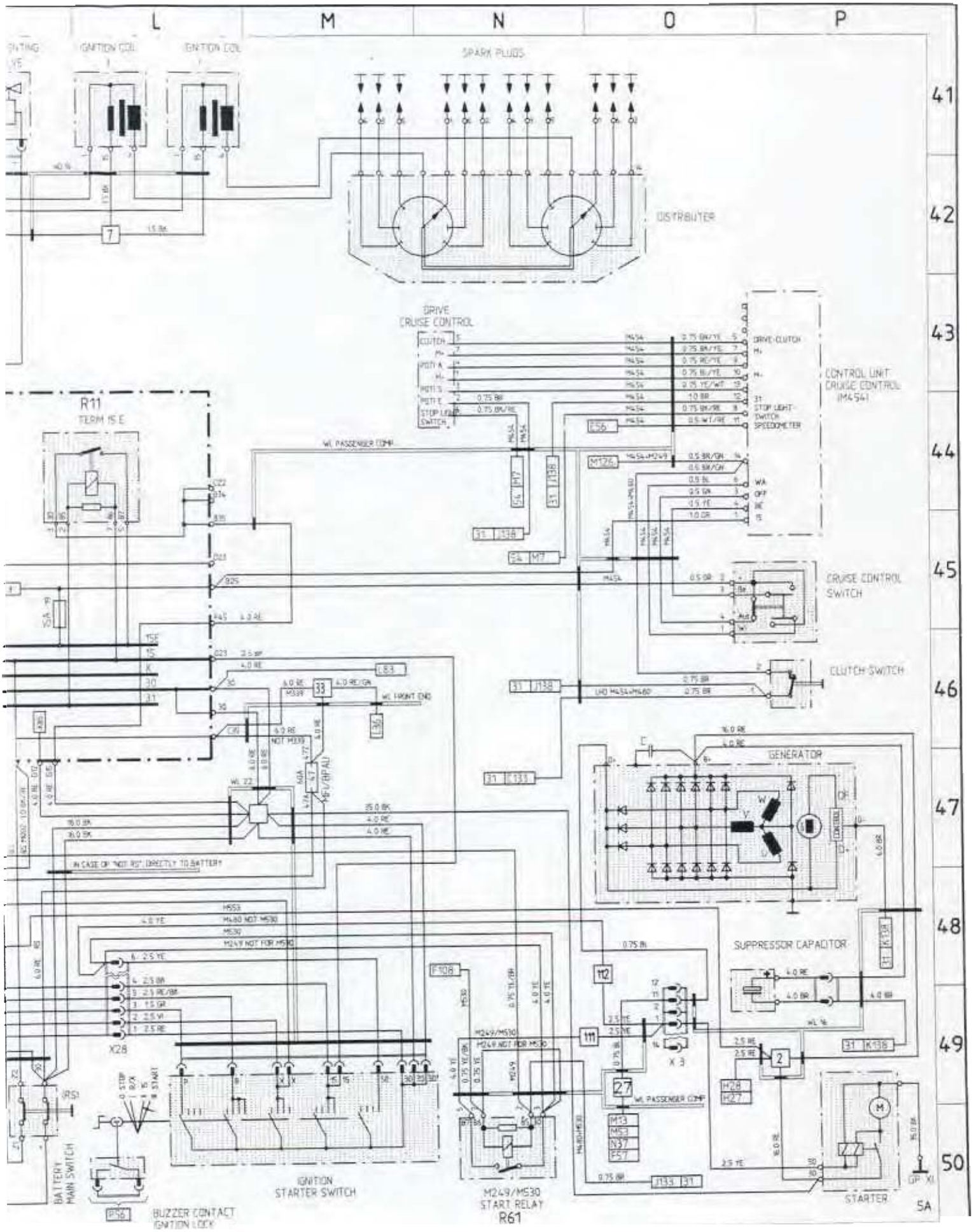
L
M
N
O
P
41
42
43
44
45
46
47
48
49
50
IGNITION COIL
IGNITION COIL
SPARK PLUGS
DISTRIBUTER
DRIVE CRUISE CONTROL
CONTROL UNIT CRUISE CONTROL (M4541)
R11
TERM 15 E
CRUISE CONTROL SWITCH
CLUTCH SWITCH
GENERATOR
SUPPRESSOR CAPACITOR
X28
X 3
IGNITION STARTER SWITCH
M249/M530 START RELAY R61
BATTERY MAIN SWITCH
BUZZER CONTACT IGNITION LOCK
STARTER
5A

911 Carrera (993) MODEL 95/2 SHEET 6

INSTRUMENTS AND SENSOR

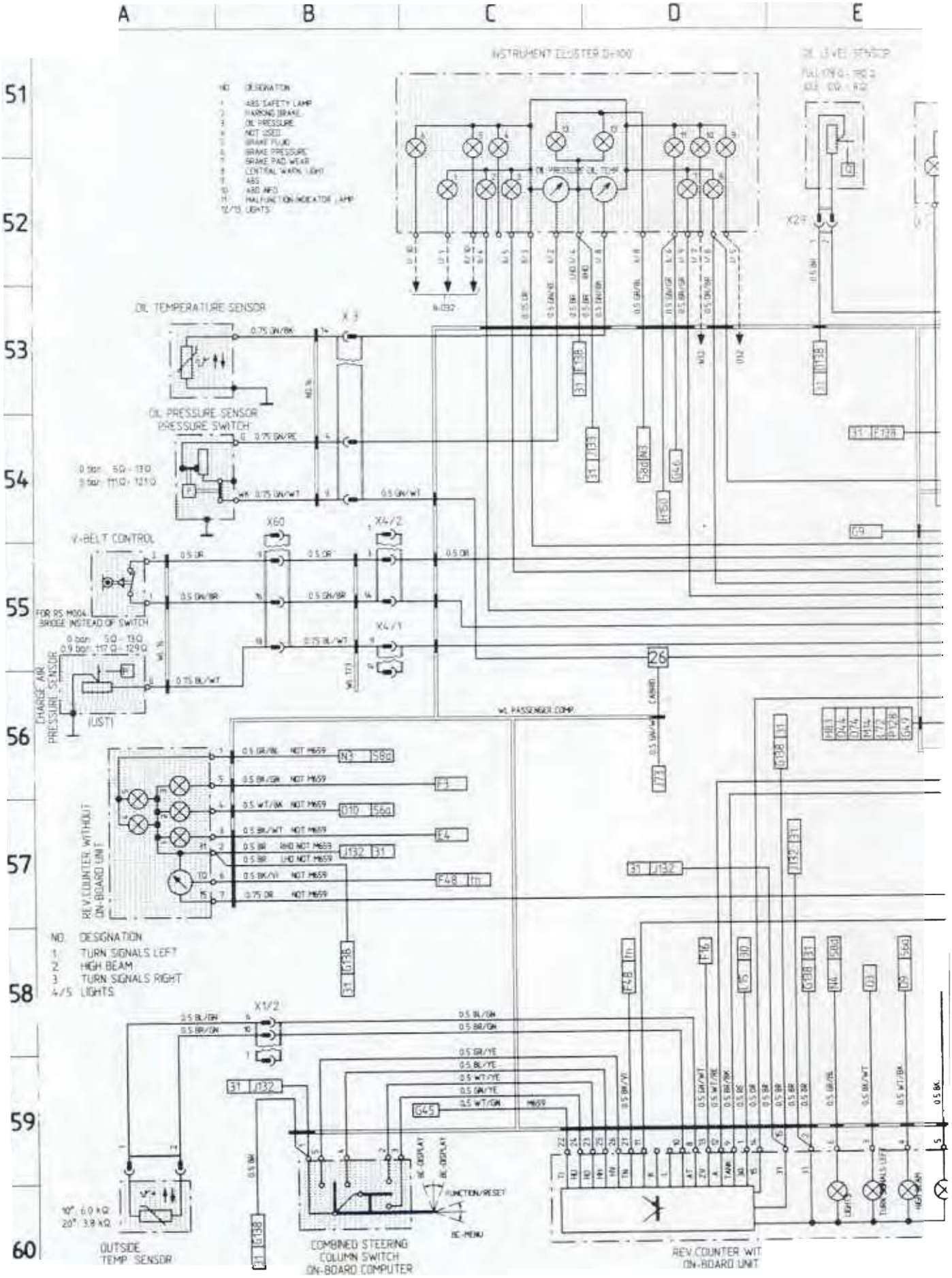

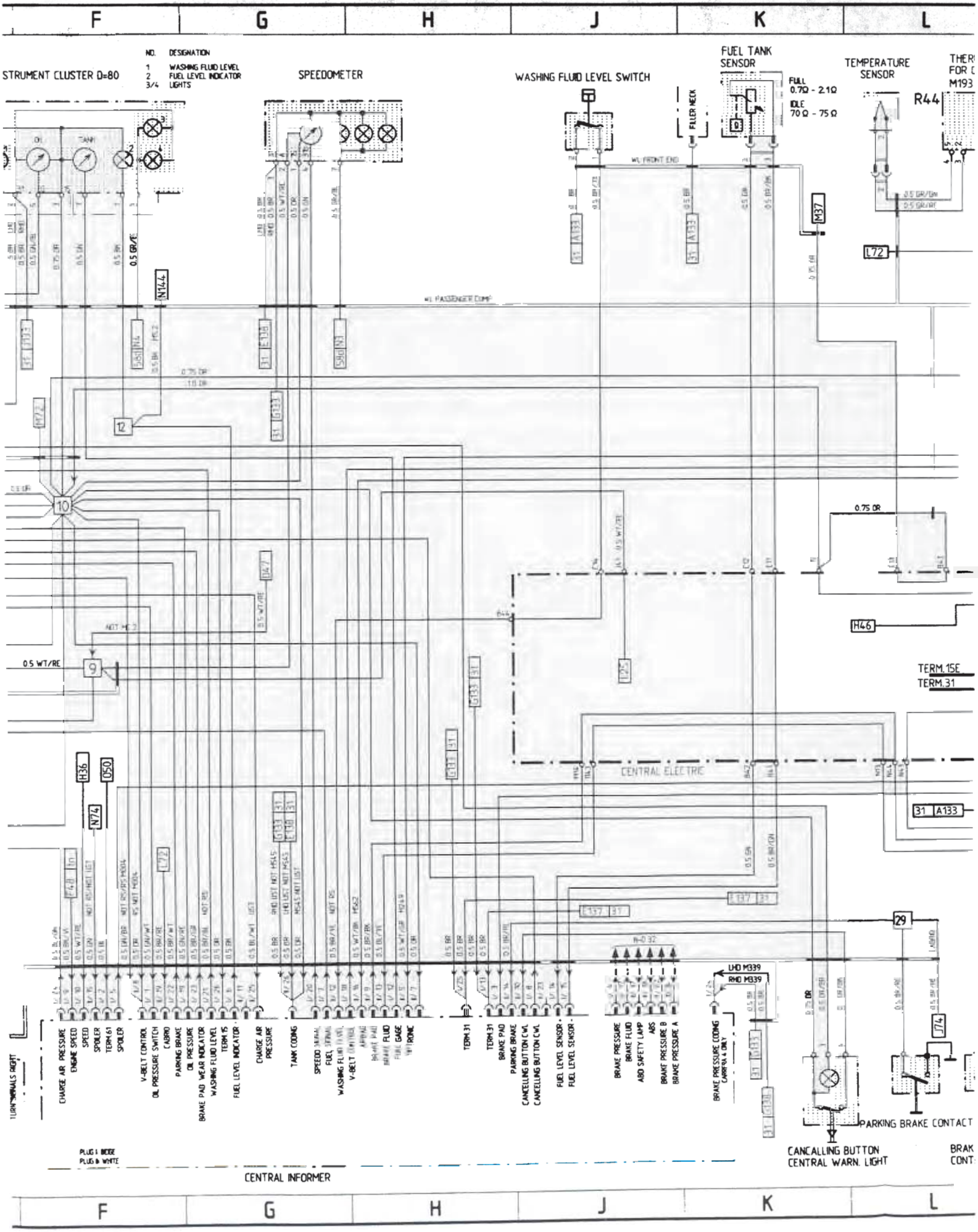
F
G
H
J
K
L
NO. DESIGNATION
1 WASHING FLUID LEVEL
2 FUEL LEVEL INDICATOR
3/4 LIGHTS
STRUMENT CLUSTER D=80
SPEEDOMETER
WASHING FLUID LEVEL SWITCH
FUEL TANK SENSOR
FULL 0.7Ω - 2.1Ω
IDLE 70 Ω - 75 Ω
FILLER NECK
TEMPERATURE SENSOR
R44
M37
L72
N144
H46
TERM.15E
TERM.31
CENTRAL ELECTRIC
H36
050
N74
LHD M339
RHD M339
CHARGE AIR PRESSURE
ENGINE SPEED
SPEED
SPOILER
TERM 61
SPOILER
V-BELT CONTROL
OIL PRESSURE SWITCH
CABRIO
PARKING BRAKE
OIL PRESSURE
BRAKE PAD WEAR INDICATOR
WASHING FLUID LEVEL
TERM 15
FUEL LEVEL INDICATOR
CHARGE AIR PRESSURE
TANK COOING
TERM 31
TERM 31
BRAKE PAD
PARKING BRAKE
CANCELLING BUTTON CWL
CANCELLING BUTTON CWL
FUEL LEVEL SENSOR
FUEL LEVEL SENSOR
BRAKE PRESSURE
BRAKE FLUID
ABD SAFETY LAMP
ABS
BRAKE PRESSURE B
BRAKE PRESSURE A
BRAKE PRESSURE COOING
PARKING BRAKE CONTACT
CANCALLING BUTTON
CENTRAL WARN. LIGHT
CENTRAL INFORMER
PLUG I BEIGE
PLUG II WHITE

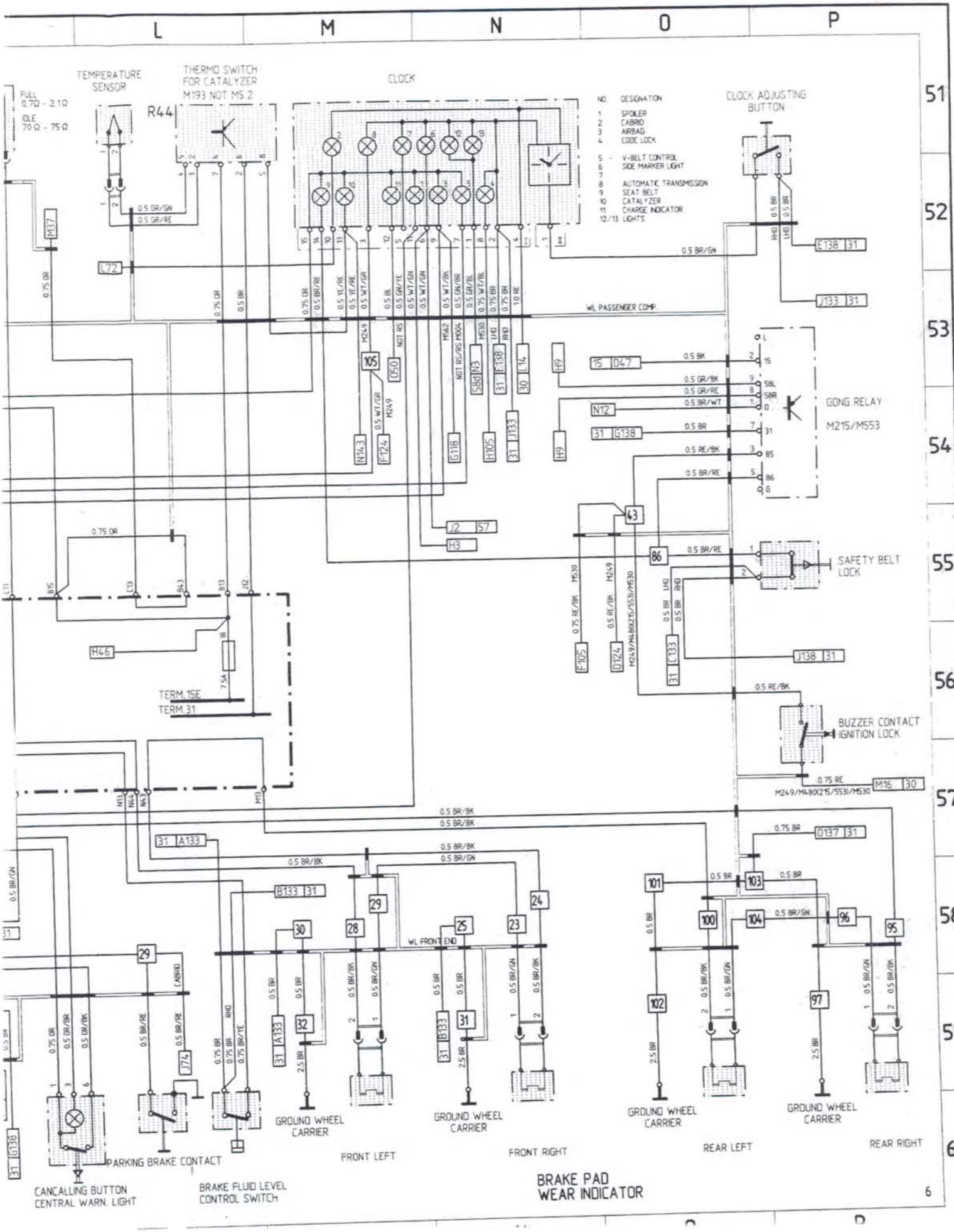
L
M
N
O
P
51
52
53
54
55
56
57
58
59
60
TEMPERATURE SENSOR
FULL 0.7Ω - 2.1Ω
IDLE 70 Ω - 75 Ω
THERMO SWITCH FOR CATALYZER M193 NOT MS 2
R44
CLOCK
NO. DESIGNATION
1 SPOILER
2 CABRIO
3 AIRBAG
4 CODE LOCK
5 - V-BELT CONTROL
6 SIDE MARKER LIGHT
7
8 AUTOMATIC TRANSMISSION
9 SEAT BELT
10 CATALYZER
11 CHARGE INDICATOR
12/13 LIGHTS
CLOCK ADJUSTING BUTTON
WL PASSENGER COMP.
GONG RELAY
M215/M553
SAFETY BELT LOCK
BUZZER CONTACT IGNITION LOCK
TERM.15E
TERM.31
WL FRONT END
GROUND WHEEL CARRIER
FRONT LEFT
FRONT RIGHT
REAR LEFT
REAR RIGHT
PARKING BRAKE CONTACT
CANCALLING BUTTON CENTRAL WARN. LIGHT
BRAKE FLUID LEVEL CONTROL SWITCH
BRAKE PAD WEAR INDICATOR
6

911 Carrera (993) MODEL 95/2 SHEET 7

SEATS

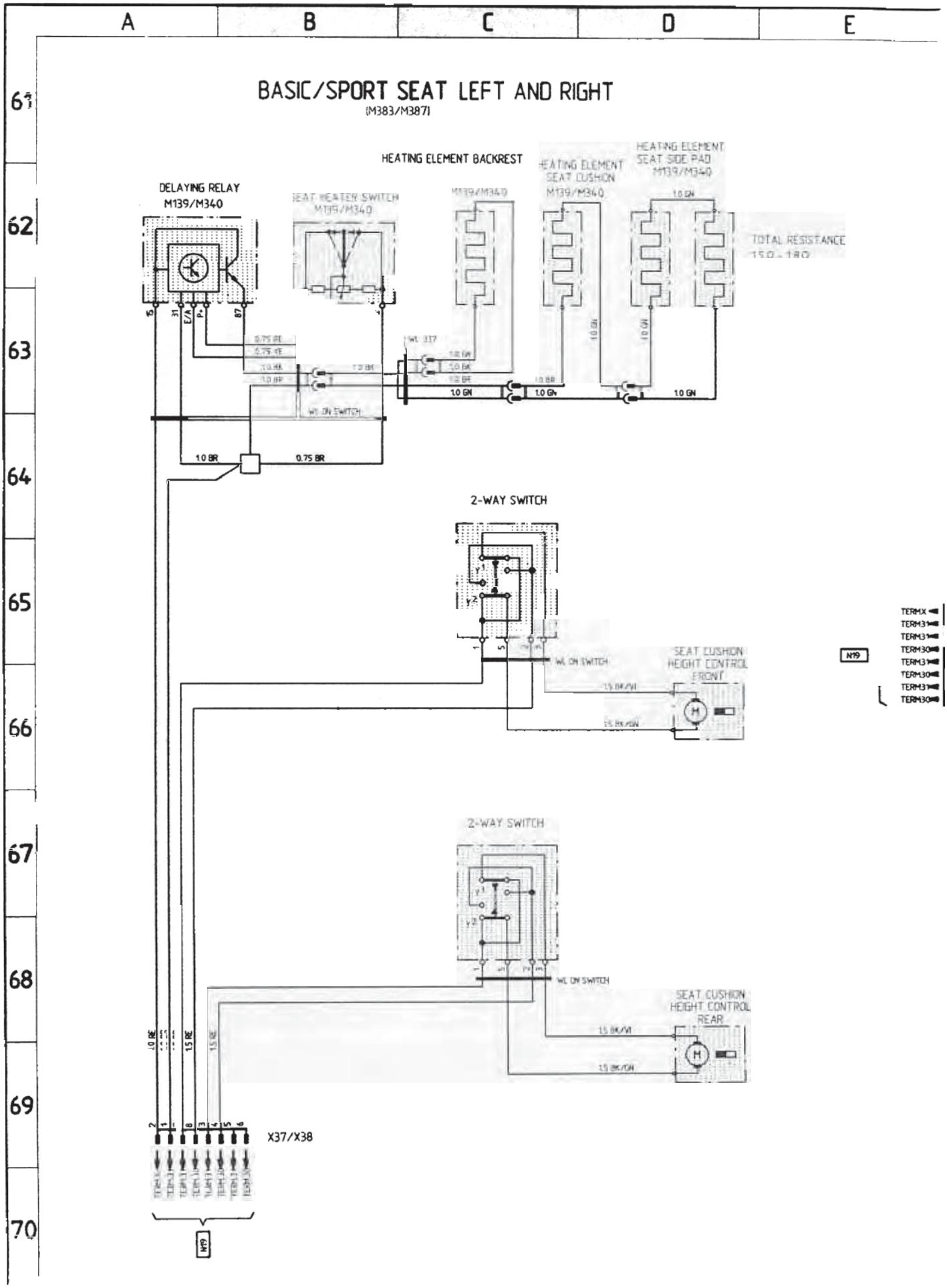

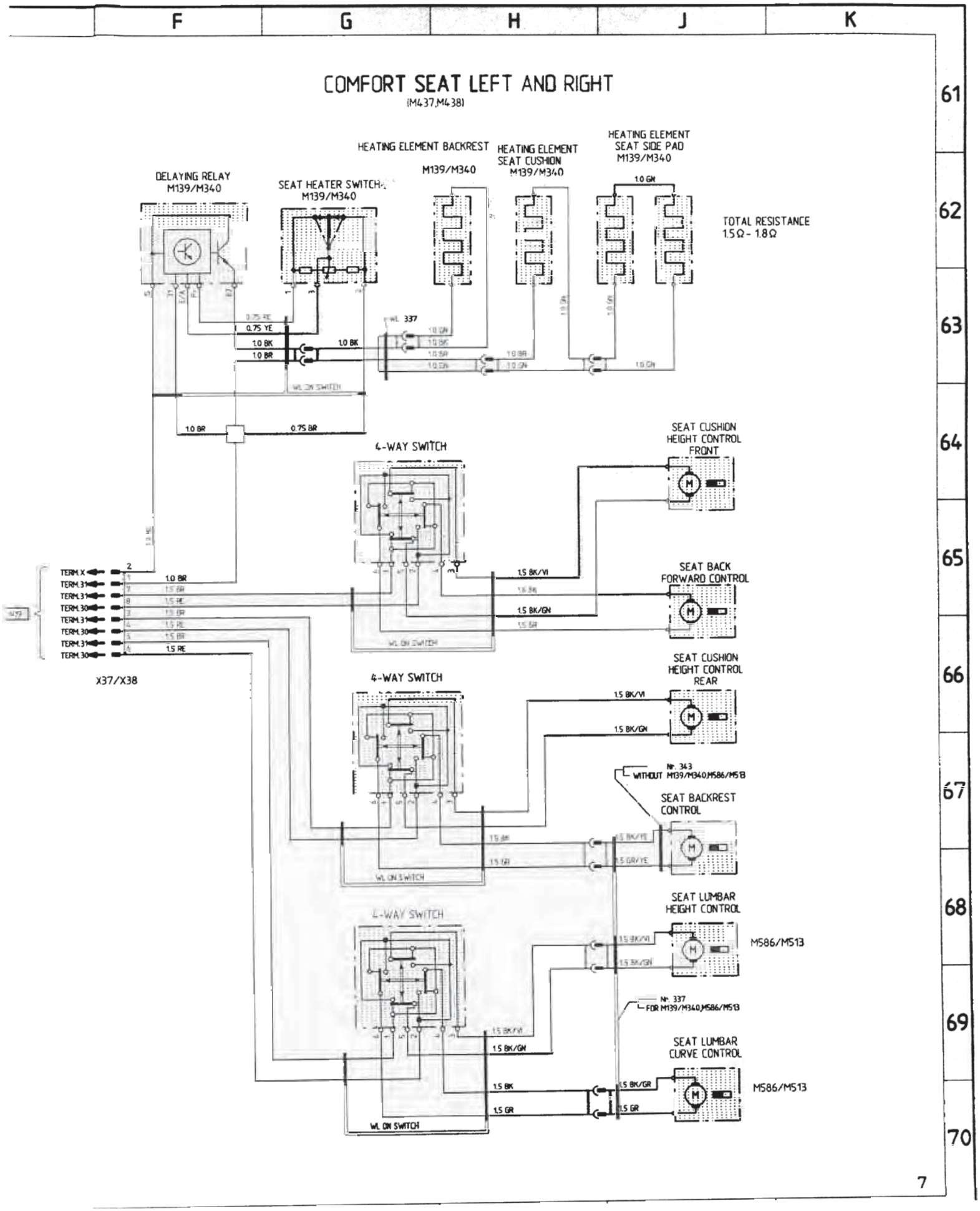
F
G
H
J
K
COMFORT SEAT LEFT AND RIGHT
(M437,M438)
DELAYING RELAY
M139/M340
SEAT HEATER SWITCH
M139/M340
HEATING ELEMENT BACKREST
M139/M340
HEATING ELEMENT
SEAT CUSHION
M139/M340
HEATING ELEMENT
SEAT SIDE PAD
M139/M340
TOTAL RESISTANCE
1.5Ω - 1.8Ω
WL 337
WL ON SWITCH
4-WAY SWITCH
SEAT CUSHION
HEIGHT CONTROL
FRONT
SEAT BACK
FORWARD CONTROL
SEAT CUSHION
HEIGHT CONTROL
REAR
Nr. 343
WITHOUT M139/M340,M586/M513
SEAT BACKREST
CONTROL
SEAT LUMBAR
HEIGHT CONTROL
M586/M513
Nr. 337
FOR M139/M340,M586/M513
SEAT LUMBAR
CURVE CONTROL
M586/M513
TERM.X
TERM.31
TERM.30
X37/X38
61
62
63
64
65
66
67
68
69
70
7

911 Carrera (993) MODEL 95/2 SHEET 8

REAR SPOILER, TWO-TONE HORNS, WIPE- AND WASH CLEANERS, SUN ROOF, CONVERTIBLE TOP

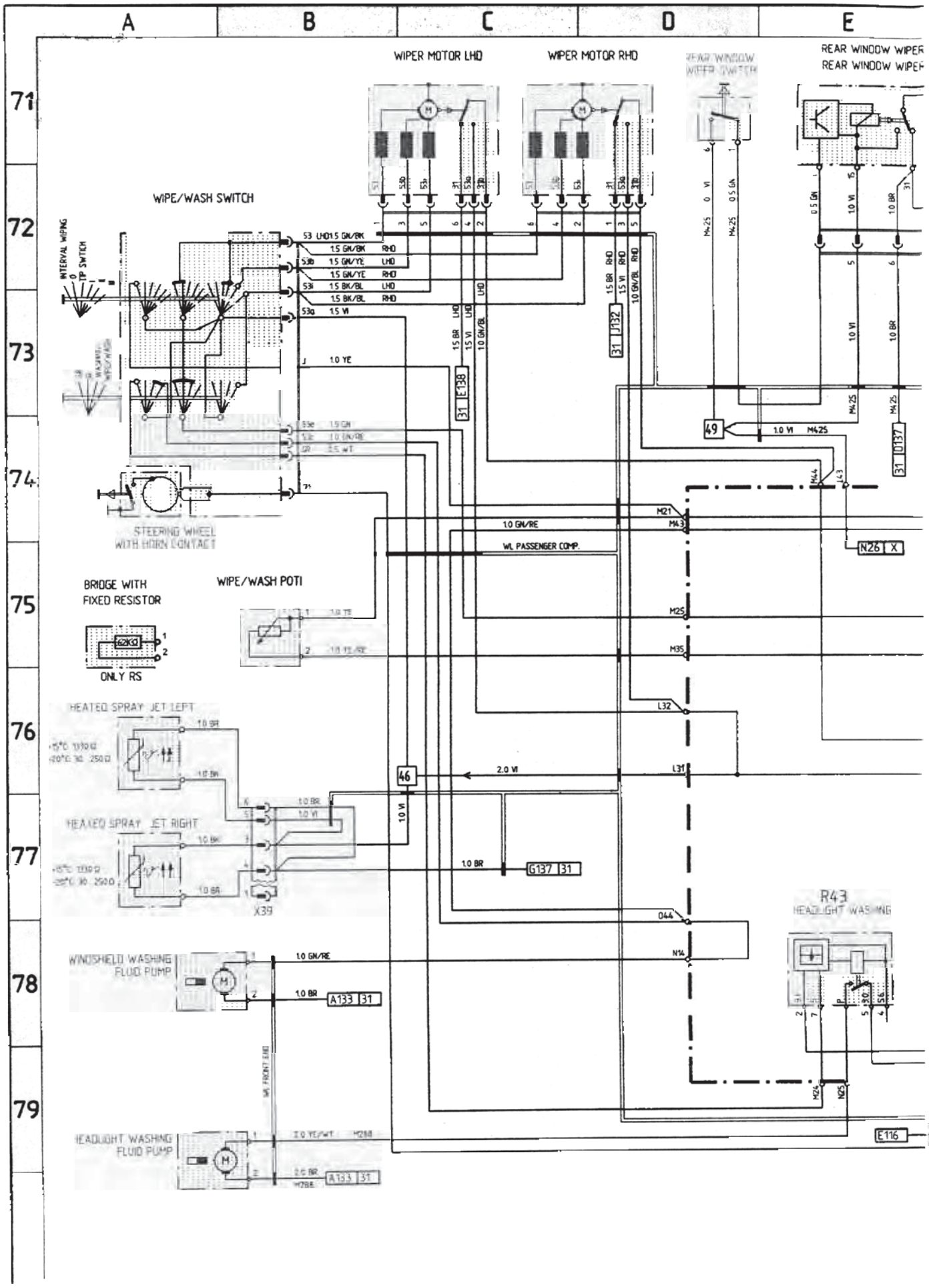

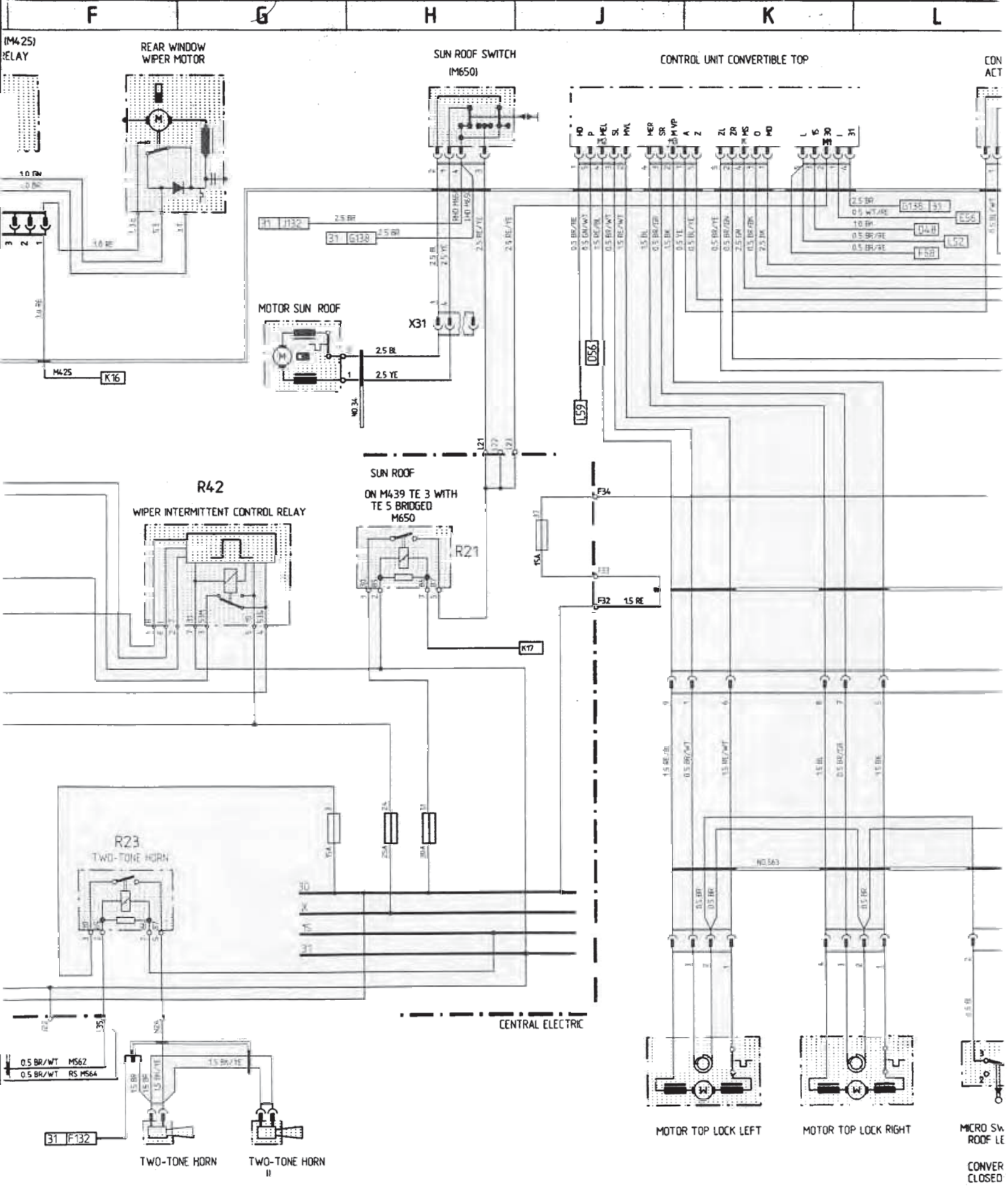
F
G
H
J
K
L
(M425)
RELAY
REAR WINDOW
WIPER MOTOR
SUN ROOF SWITCH
(M650)
CONTROL UNIT CONVERTIBLE TOP
MOTOR SUN ROOF
X31
M425
K16
R42
WIPER INTERMITTENT CONTROL RELAY
SUN ROOF
ON M439 TE 3 WITH
TE 5 BRIDGED
M650
R21
F34
F32
K17
R23
TWO-TONE HORN
CENTRAL ELECTRIC
MOTOR TOP LOCK LEFT
MOTOR TOP LOCK RIGHT
TWO-TONE HORN
TWO-TONE HORN
II
F132
BK = BLACK
WT = WHITE
RE = RED
GN = GREEN
YE = YELLOW
GR = GREY
BR = BROWN
BL = BLUE
VI = VIOLET
PK = PINK

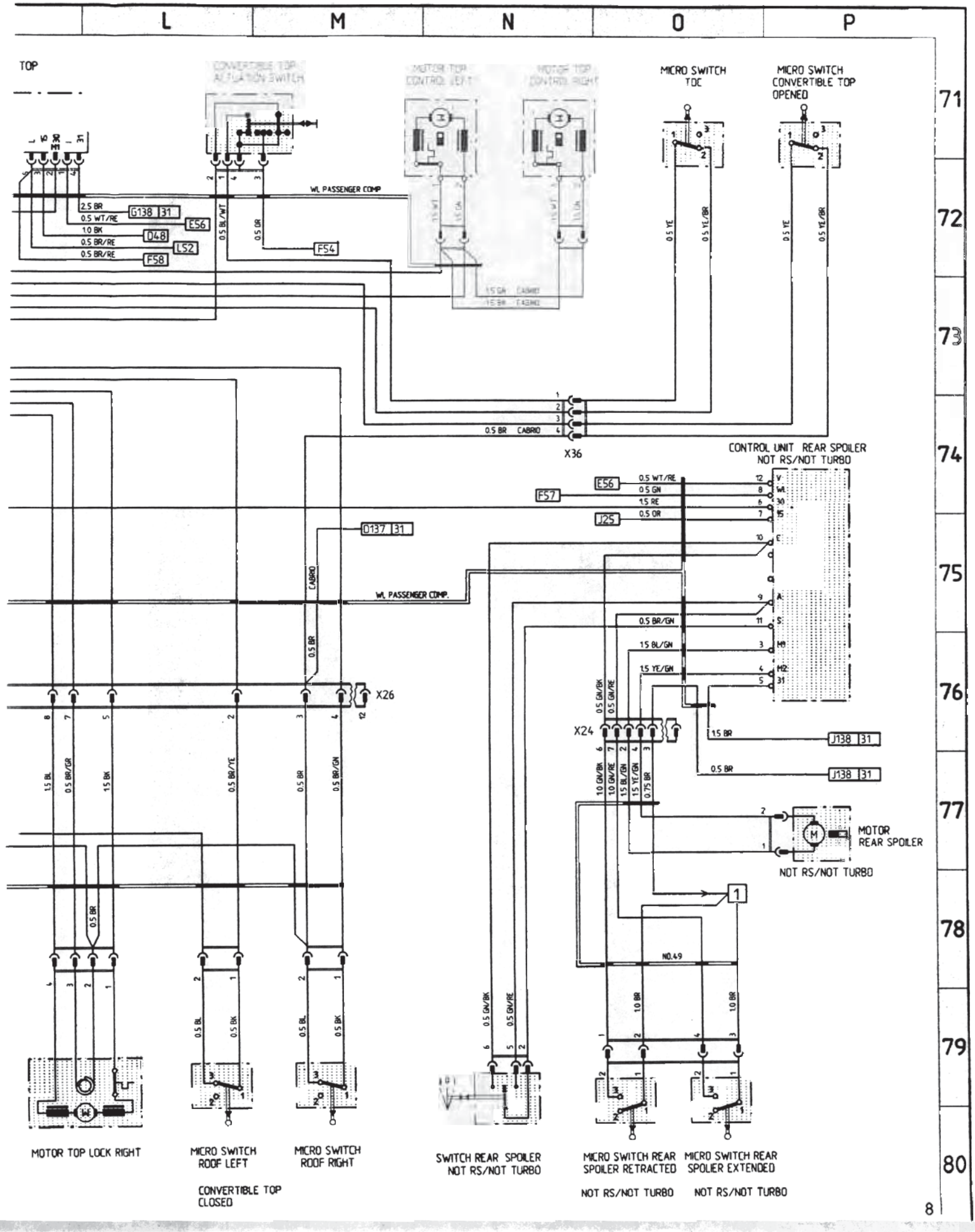
L
M
N
O
P
71
72
73
74
75
76
77
78
79
80
TOP
MICRO SWITCH TOC
MICRO SWITCH CONVERTIBLE TOP OPENED
WL PASSENGER COMP
2.5 BR
0.5 WT/RE
1.0 BK
0.5 BR/RE
0.5 BR/RE
G138 31
E56
D48
LS2
F58
0.5 BL/WT
0.5 OR
F54
0.5 YE
0.5 YE/BR
0.5 BR CABRIO
X36
CONTROL UNIT REAR SPOILER NOT RS/NOT TURBO
E56
F57
J25
0.5 WT/RE
0.5 GN
1.5 RE
0.5 OR
D137 31
CABRIO
WL PASSENGER COMP.
0.5 BR
0.5 BR/GN
1.5 BL/GN
1.5 YE/GN
X26
X24
0.5 GN/BK
0.5 GN/RE
1.5 BR
J138 31
0.5 BR
J138 31
1.0 GN/BK
1.0 GN/RE
1.5 BL/GN
1.5 YE/GN
0.75 BR
MOTOR REAR SPOILER
NOT RS/NOT TURBO
1
NO.49
1.0 BR
1.0 BR
1.5 BL
0.5 BR/GR
1.5 BK
0.5 BR/YE
0.5 BR
0.5 BR/GN
0.5 BR
0.5 BL
0.5 BK
0.5 BL
0.5 BK
0.5 GN/BK
0.5 GN/RE
MOTOR TOP LOCK RIGHT
MICRO SWITCH ROOF LEFT
MICRO SWITCH ROOF RIGHT
CONVERTIBLE TOP CLOSED
SWITCH REAR SPOILER NOT RS/NOT TURBO
MICRO SWITCH REAR SPOILER RETRACTED
MICRO SWITCH REAR SPOILER EXTENDED
NOT RS/NOT TURBO
NOT RS/NOT TURBO

911 Carrera (993) MODEL 95/2 SHEET 9

RADIO, TELEPHONE

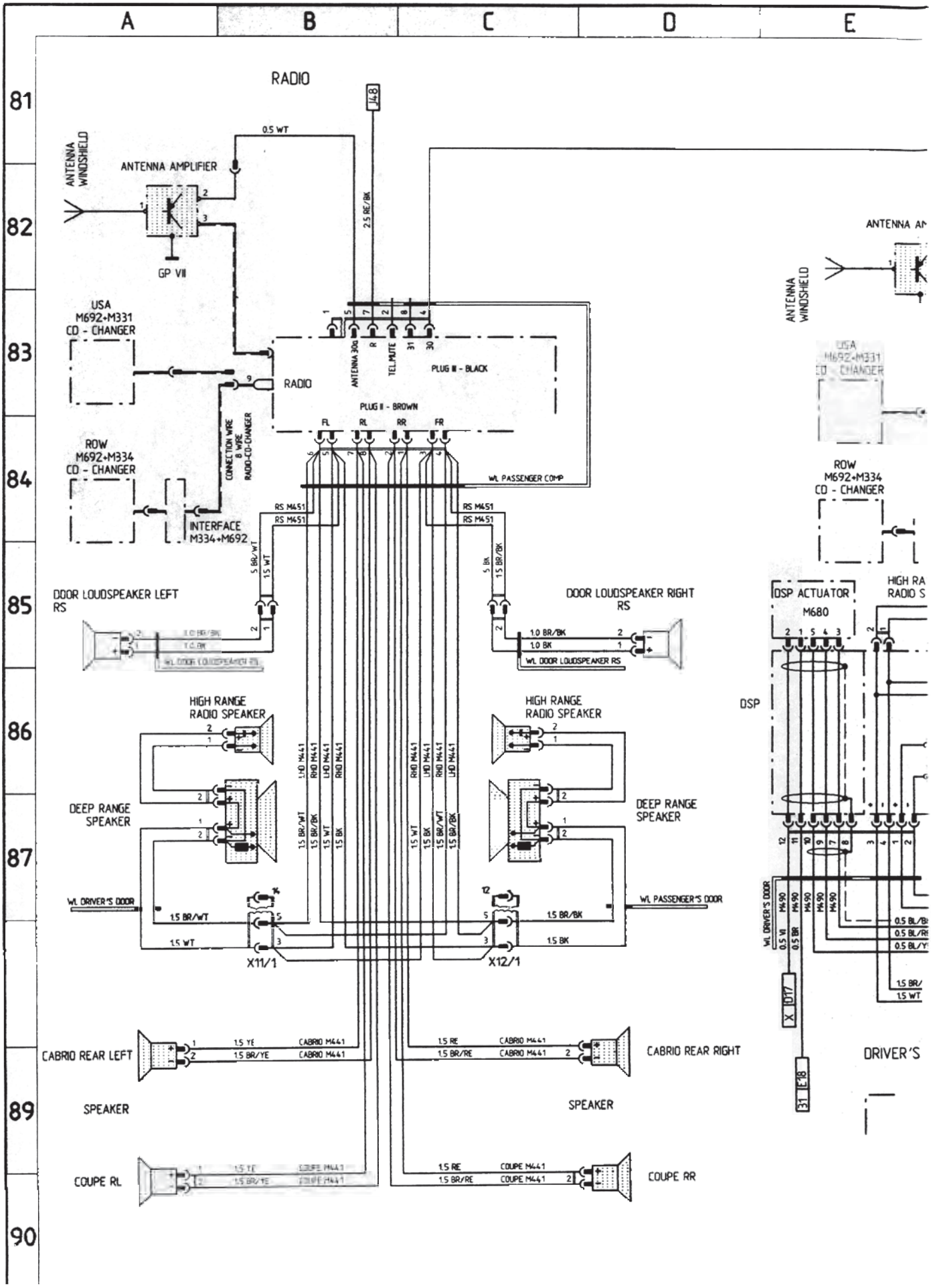

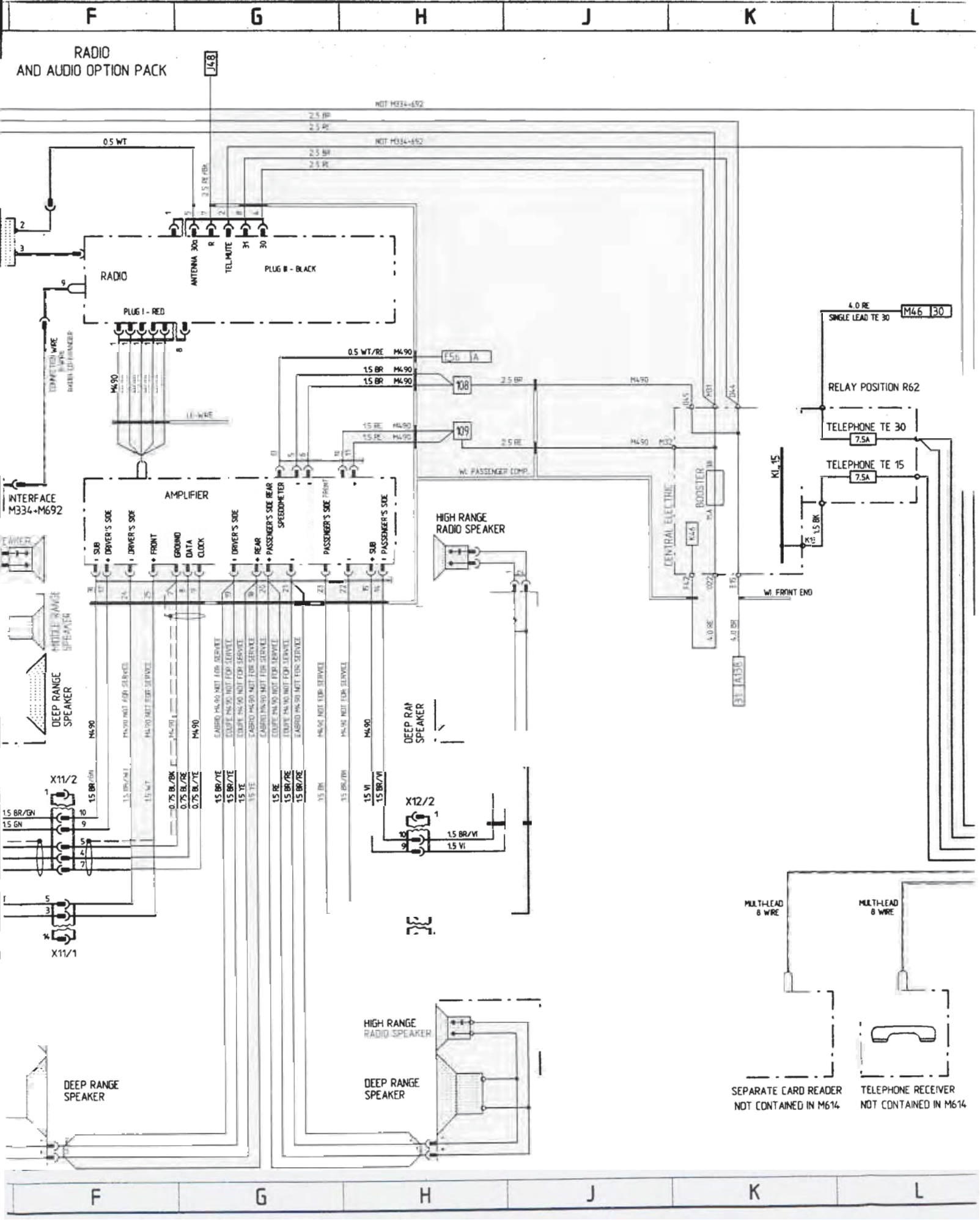

= BLACK WT = WHITE RE = RED GN = GREEN YE = YELLOW GR = GREY BR = BROWN BL = BLUE VI = VIOLET PK = PINK

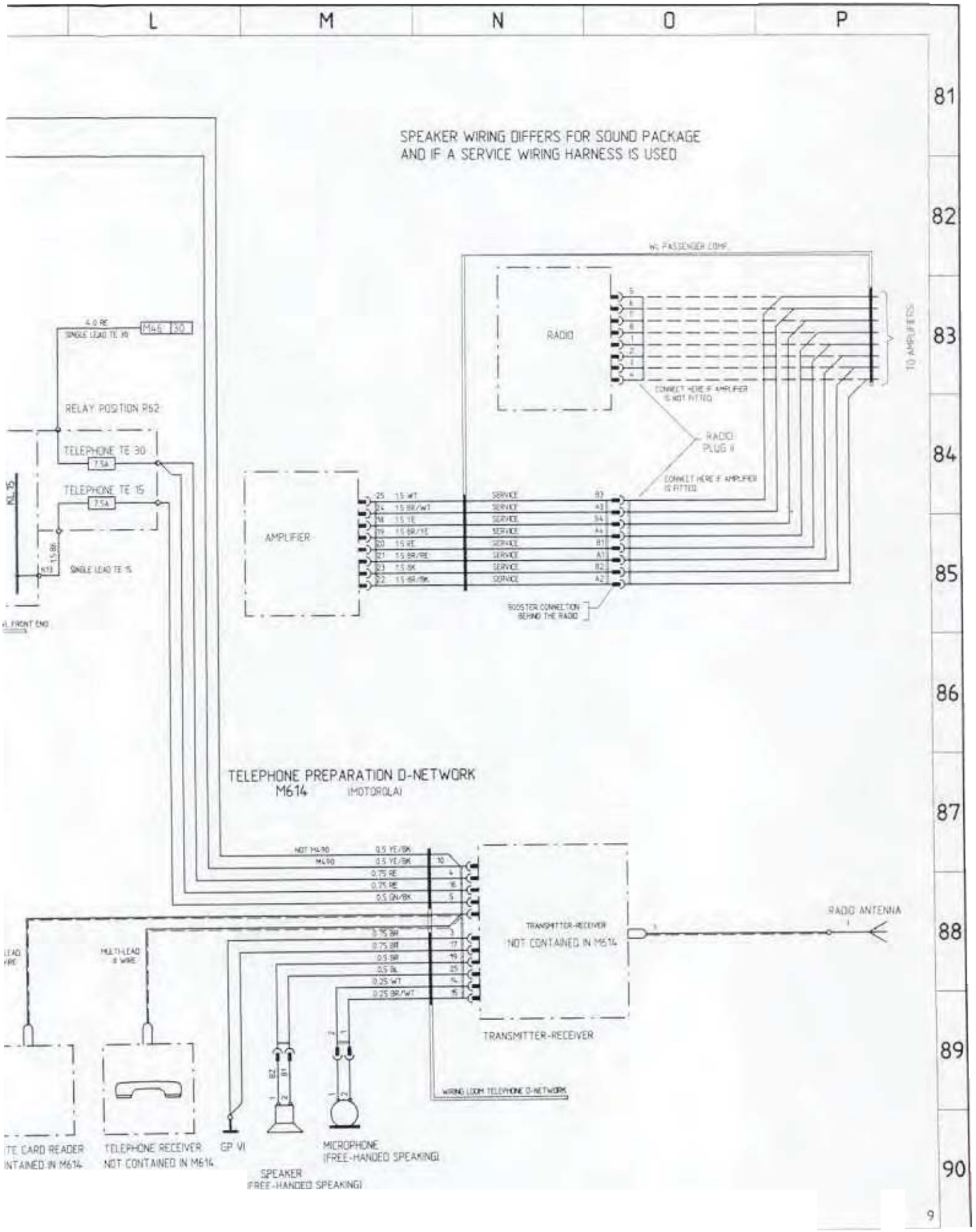
L
M
N
O
P
81
82
83
84
85
86
87
88
89
90
SPEAKER WIRING DIFFERS FOR SOUND PACKAGE
AND IF A SERVICE WIRING HARNESS IS USED
W. PASSENGER COMP.
RADIO
TO AMPLIFIERS
CONNECT HERE IF AMPLIFIER IS NOT FITTED
RADIO PLUG II
CONNECT HERE IF AMPLIFIER IS FITTED
AMPLIFIER
SERVICE
BOOSTER CONNECTION BEHIND THE RADIO
RELAY POSITION R52
TELEPHONE TE 30
TELEPHONE TE 15
7.5A
SINGLE LEAD TE 15
TELEPHONE PREPARATION D-NETWORK
M614
(MOTOROLA)
TRANSMITTER-RECEIVER
NOT CONTAINED IN M614
RADIO ANTENNA
MULTI-LEAD
WIRING LOOM TELEPHONE D-NETWORK
TELEPHONE RECEIVER
NOT CONTAINED IN M614
GP VI
MICROPHONE
(FREE-HANDED SPEAKING)
SPEAKER
(FREE-HANDED SPEAKING)

arrera 993 MODEL 95/2 SHEET 10

FOG LIGHT REAR OG LIGHT

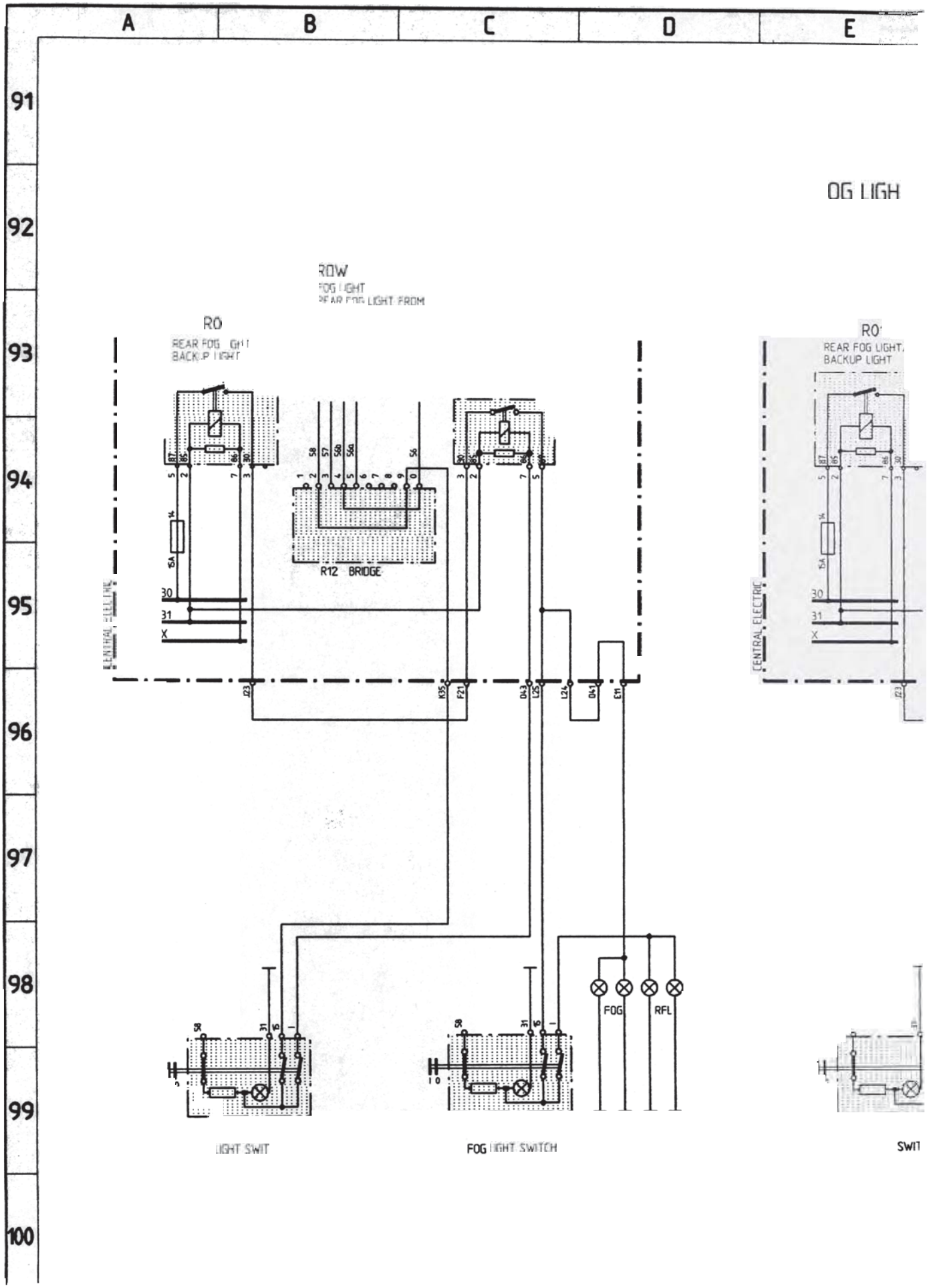

AND REAR FOG LIGHT-WIRINGS

M487-NORWAY

FOG LIGHT + REAR FOG LIGHT
ONLY WITH 57

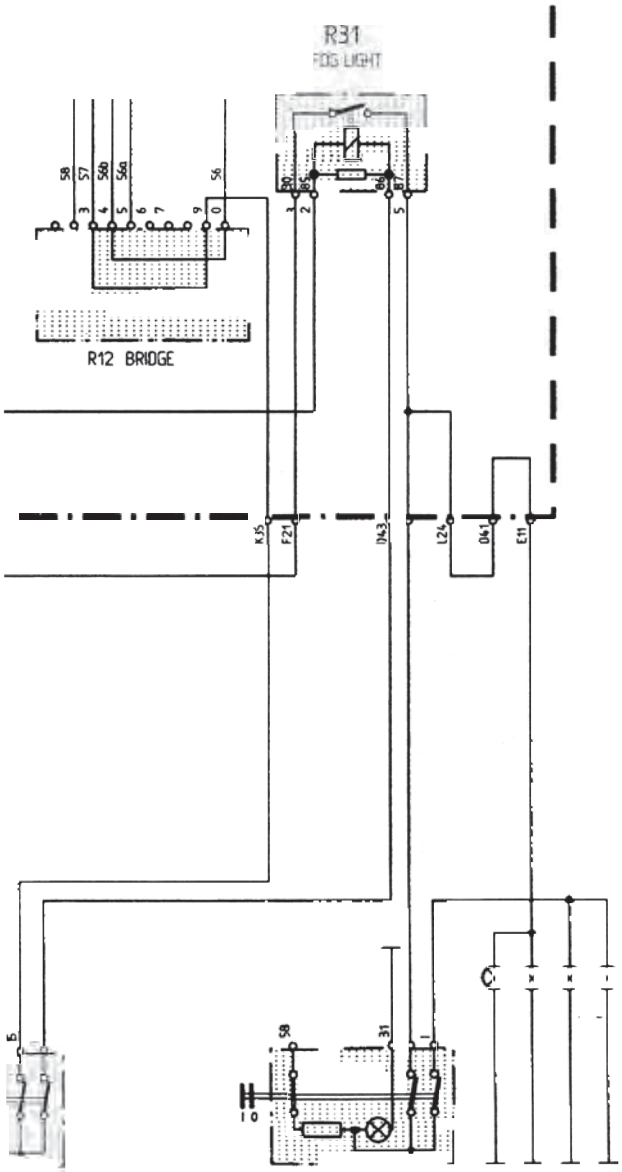

REAR FOG LIGHT SWITCH

M553-USA

FOG LIGHT WITH 56b

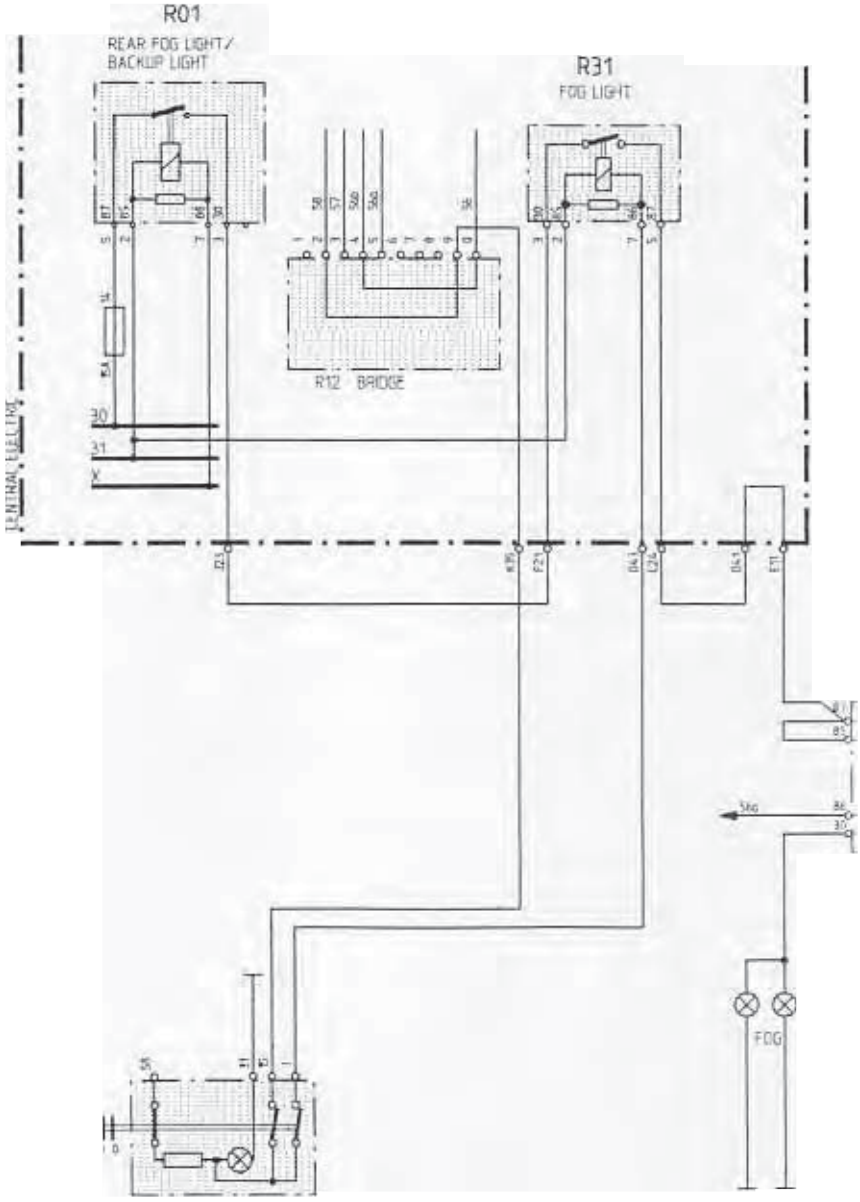

FOG LIGHT SWITCH

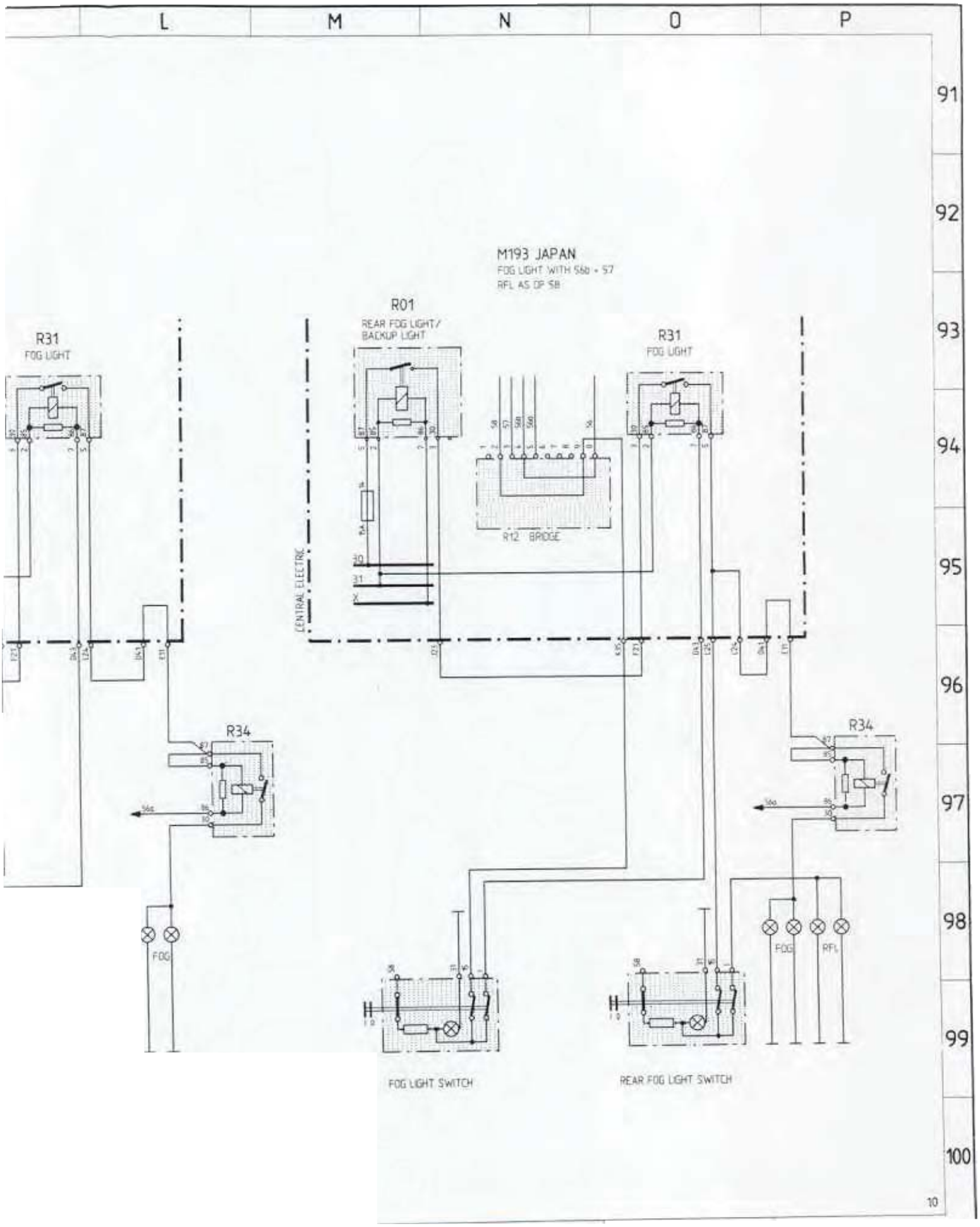
L
M
N
O
P
91
92
93
94
95
96
97
98
99
100
M193 JAPAN
FOG LIGHT WITH 56b + 57
RFL AS OF 58
R01
REAR FOG LIGHT/
BACKUP LIGHT
R31
FOG LIGHT
R31
FOG LIGHT
R12 BRIDGE
CENTRAL ELECTRIC
R34
R34
FOG
FOG
RFL
FOG LIGHT SWITCH
REAR FOG LIGHT SWITCH
10

911 Carrera (993) MODEL 95/2 SHEET 11

ANTI-DRIVE-OFF DEVICE (M530)

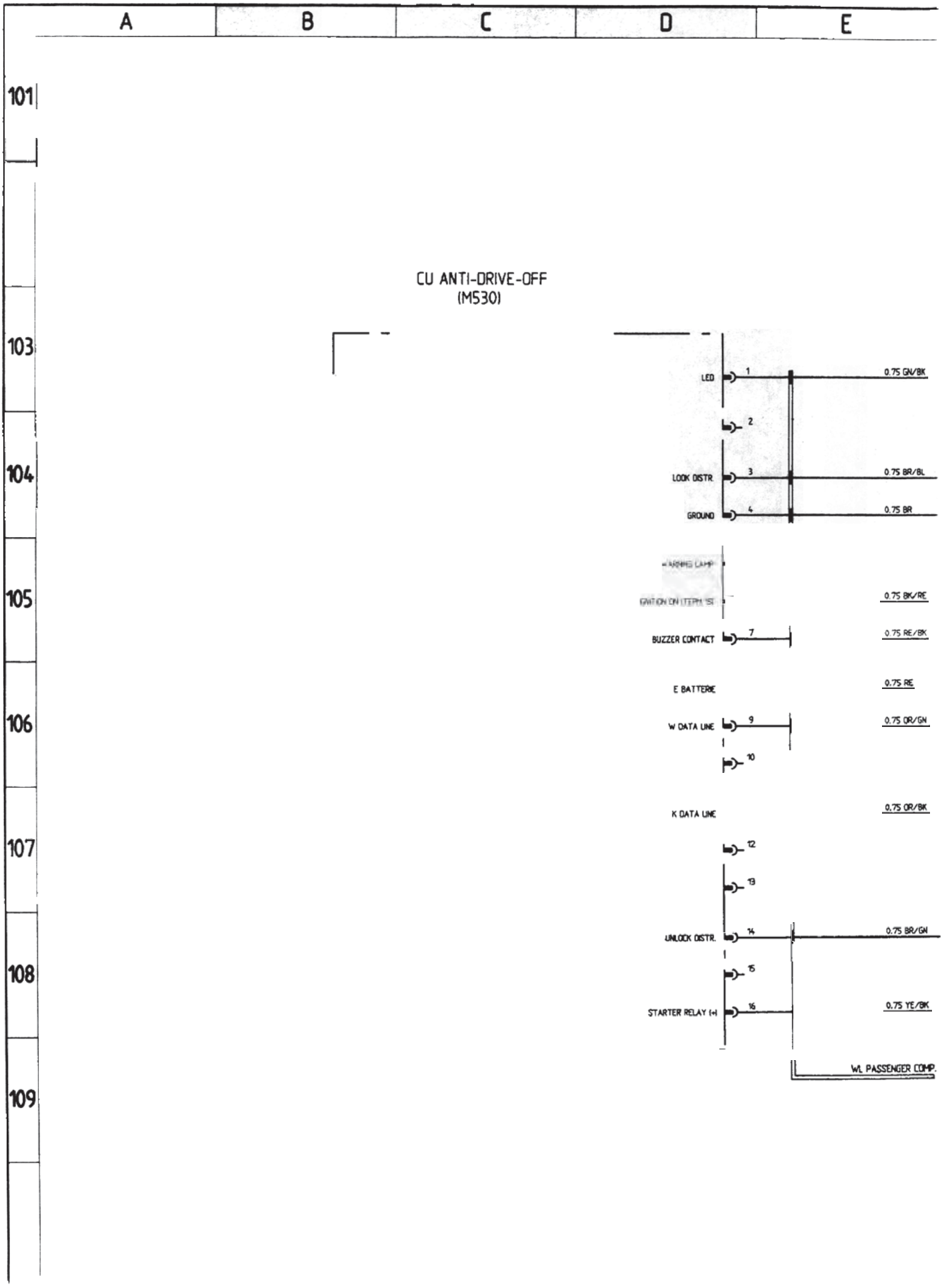

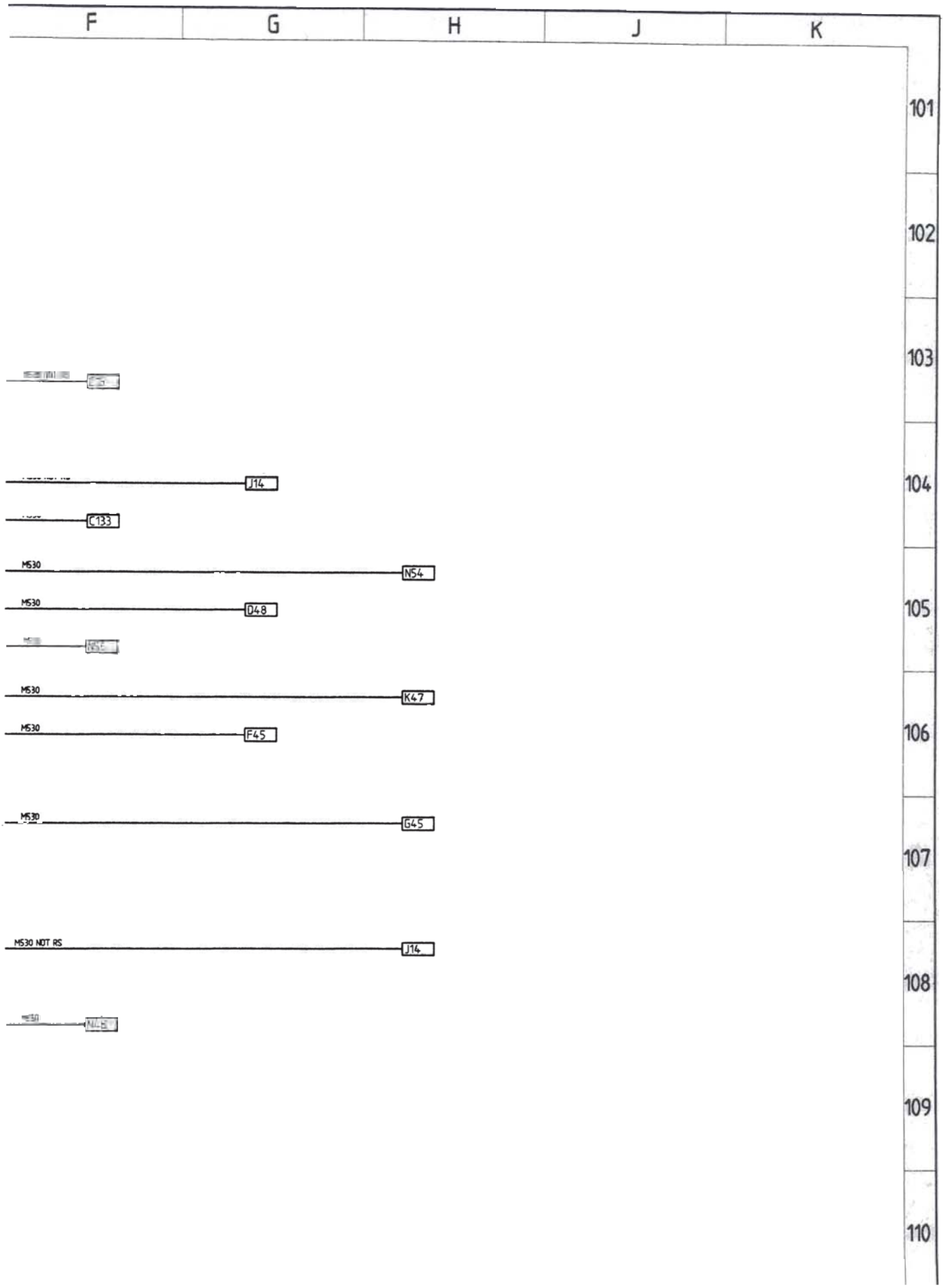
F
G
H
J
K
101
102
103
104
105
106
107
108
109
110
J14
C133
M530
N54
M530
D48
M530
K47
M530
F45
M530
G45
M530 NOT RS
J14

911 Carrera (993) MODEL 95/2 SHEET 12

AIRBAG

	A	B	C	D	E
113					HORN CONTACT 1310 0.5 SK
114					K128 STEERING WHEEL CONTACT UNIT
115					2 1
116					E79 0.5 BR/WT
117					31 E138
118					
119					D48

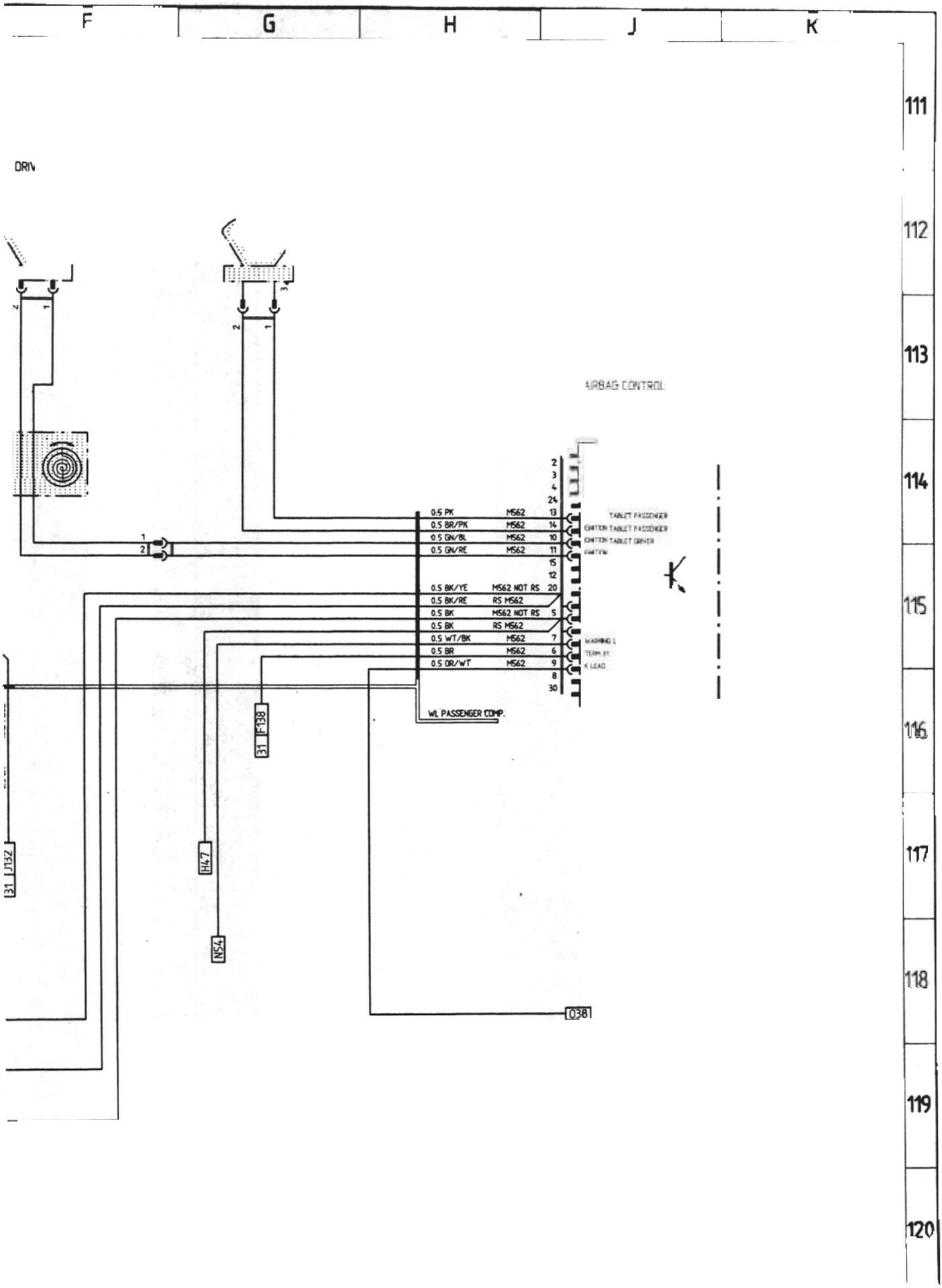
F
G
H
J
K
111
112
113
114
115
116
117
118
119
120
DRIV
AIRBAG CONTROL
0.5 PK M562 13
0.5 BR/PK M562 14
0.5 GN/BL M562 10
0.5 GN/RE M562 11
0.5 BK/YE M562 NOT RS 20
0.5 BK/RE RS M562
0.5 BK M562 NOT RS 5
0.5 BK RS M562
0.5 WT/BK M562 7
0.5 BR M562 6
0.5 OR/WT M562 9
TABLET PASSENGER
IGNITION TABLET PASSENGER
IGNITION TABLET DRIVER
WL PASSENGER COMP.
31 F138
31 J132
H47
N54
038

911 Carrera (993) MODEL 95/2 SHEET 13

TIPTRONIC-TRANSMISSION

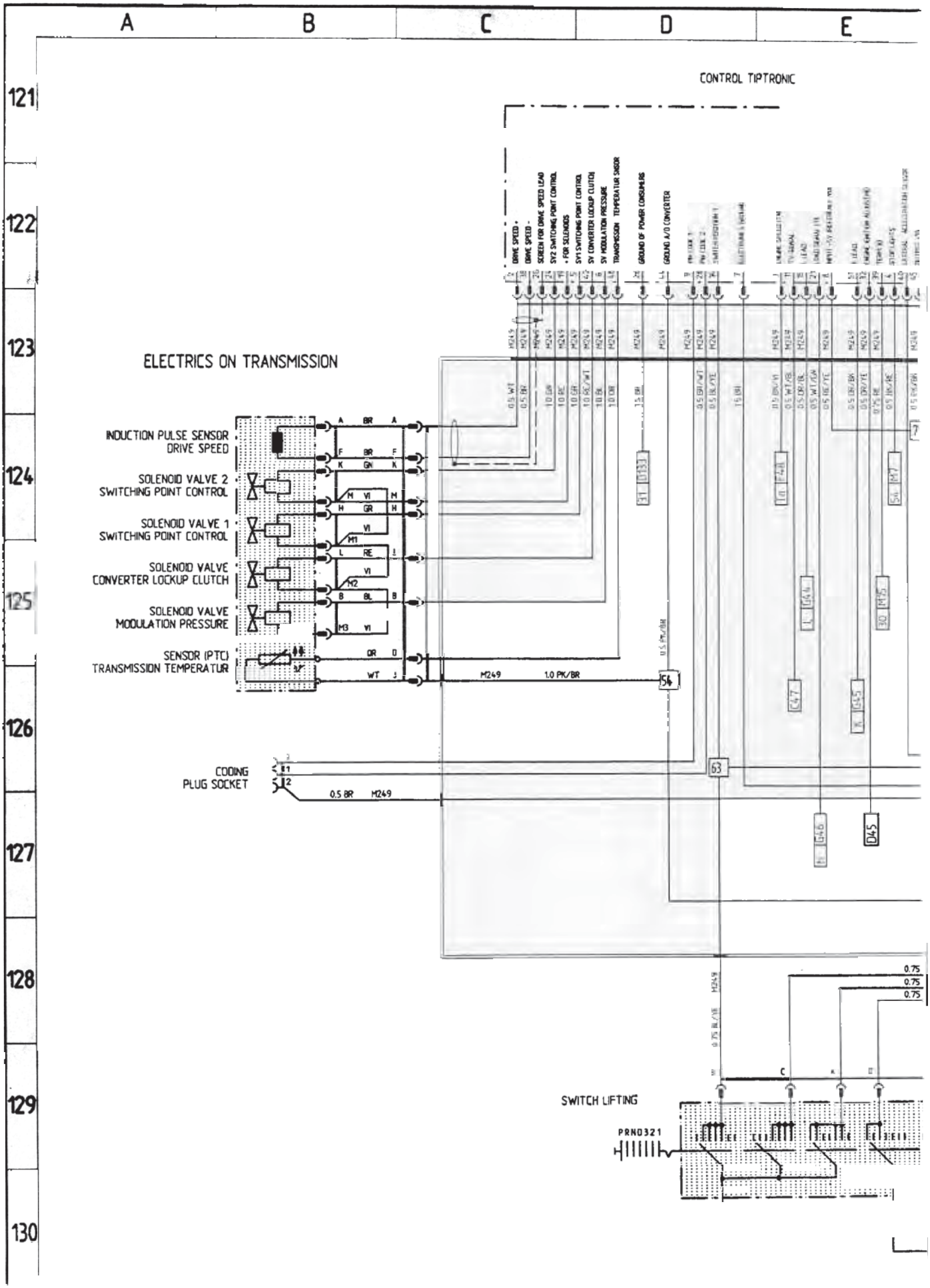

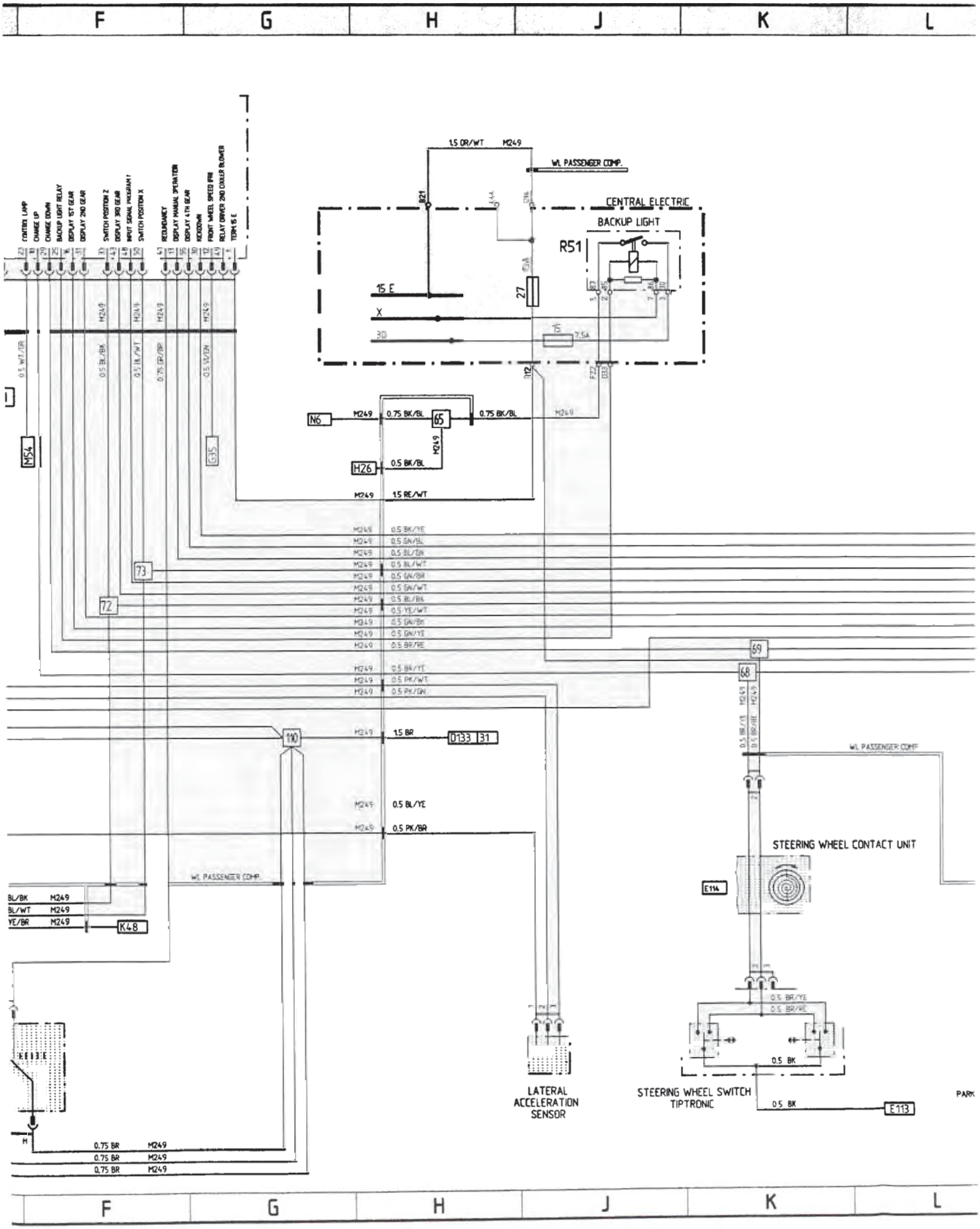
F
G
H
J
K
L
CONTROL LAMP
CHANGE UP
CHANGE DOWN
BACKUP LIGHT RELAY
DISPLAY 1ST GEAR
DISPLAY 2ND GEAR
SWITCH POSITION Z
DISPLAY 3RD GEAR
INPUT SIGNAL PROGRAM 1
SWITCH POSITION X
REDUNDANCY
DISPLAY MANUAL OPERATION
DISPLAY 4TH GEAR
KICKDOWN
FRONT WHEEL SPEED FRI
RELAY DRIVER 2ND COOLER BLOWER
TERM 15 E
1.5 OR/WT
M249
WL PASSENGER COMP.
CENTRAL ELECTRIC
BACKUP LIGHT
R51
15 E
X
30
27
15
7.5A
N6
0.75 BK/BL
65
H26
0.5 BK/BL
1.5 RE/WT
M54
G35
73
72
190
1.5 BR
D133 31
0.5 BL/YE
0.5 PK/BR
K48
0.75 BR
69
68
STEERING WHEEL CONTACT UNIT
E114
0.5 BR/YE
0.5 BR/RE
0.5 BK
LATERAL ACCELERATION SENSOR
STEERING WHEEL SWITCH TIPTRONIC
E113
PARK

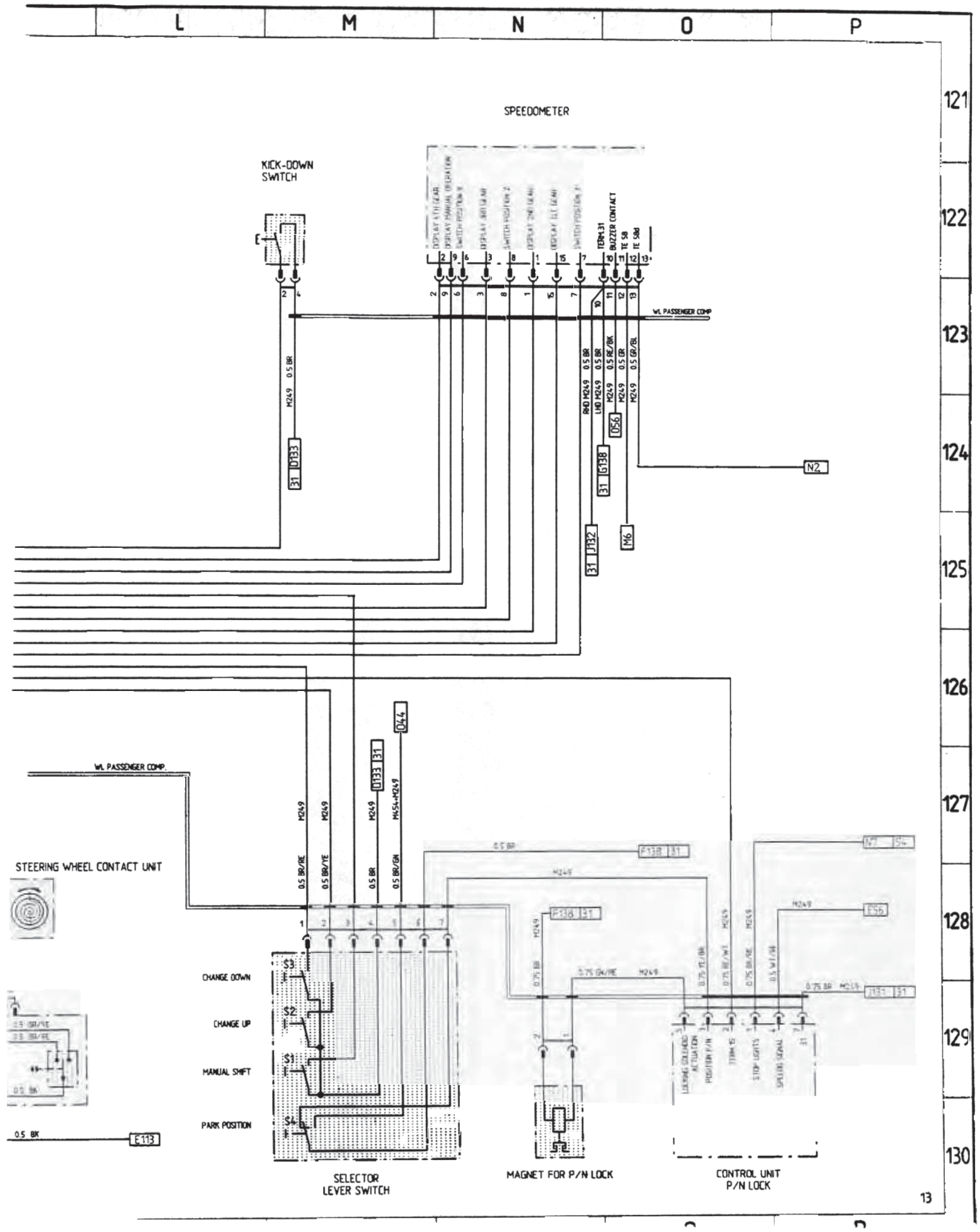
L
M
N
O
P
121
122
123
124
125
126
127
128
129
130
SPEEDOMETER
KICK-DOWN SWITCH
TERM.31
BUZZER CONTACT
TE 50
TE 50d
WL PASSENGER COMP
0.5 BR
M249
RHD M249
LHD M249
M249
0.5 RE/BK
0.5 GR
0.5 GR/BL
D133
G138
D56
J132
M6
N2
D44
WL PASSENGER COMP.
M249
M454+M249
0.5 BR/RE
0.5 BR/YE
0.5 BR/GN
STEERING WHEEL CONTACT UNIT
CHANGE DOWN
CHANGE UP
MANUAL SHIFT
PARK POSITION
S3
S2
S1
S4
0.5 BK
E113
F138
E56
0.75 BR
0.75 GN/RE
0.75 RE/BK
0.75 BR/WT
0.75 BR/RE
0.5 WT/BK
STOP LIGHTS
SPEEDO SIGNAL
SELECTOR LEVER SWITCH
MAGNET FOR P/N LOCK
CONTROL UNIT P/N LOCK
13

911 Carrera (993) MODEL 95/2 SHEET 14

GROUND POINTS

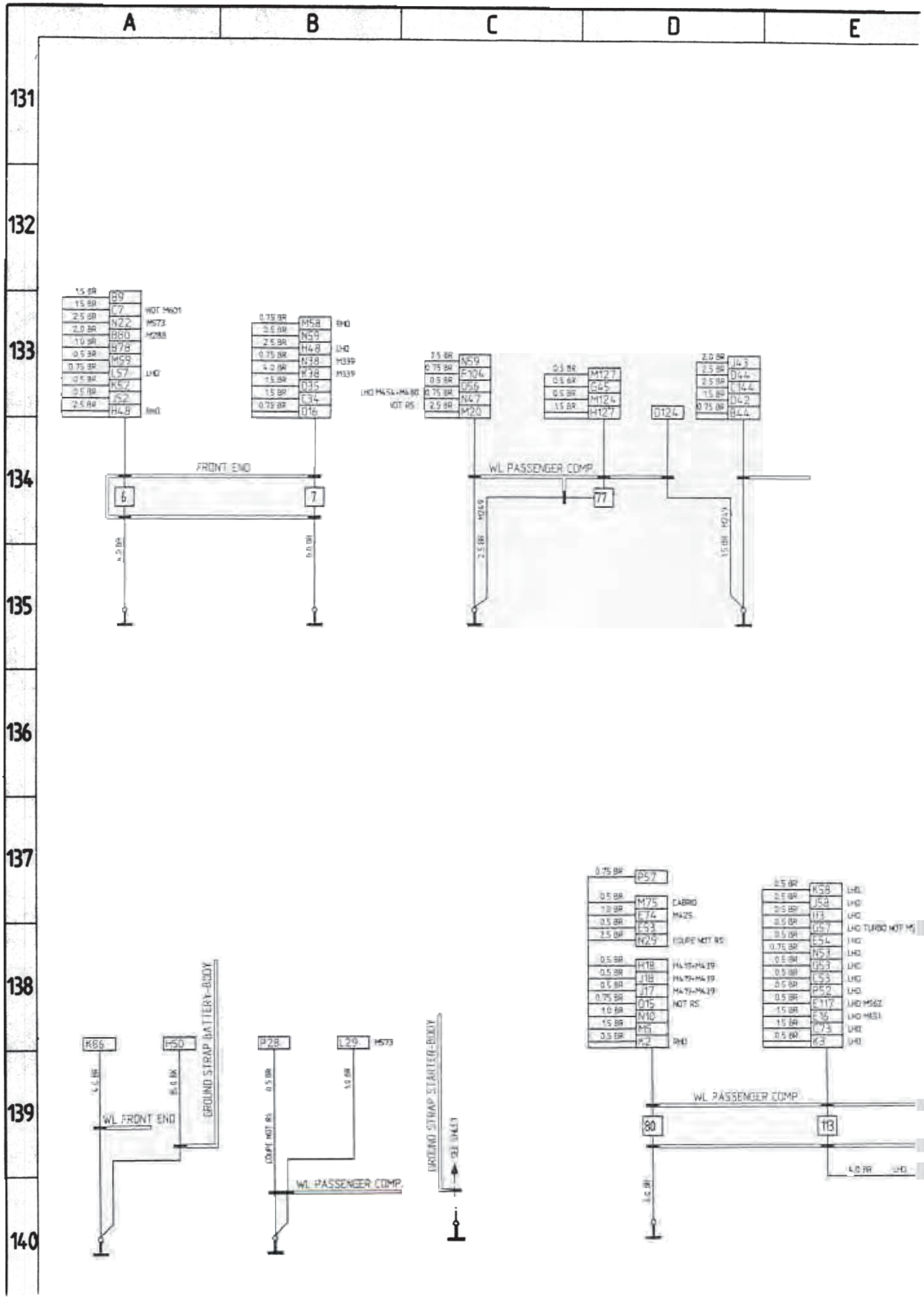

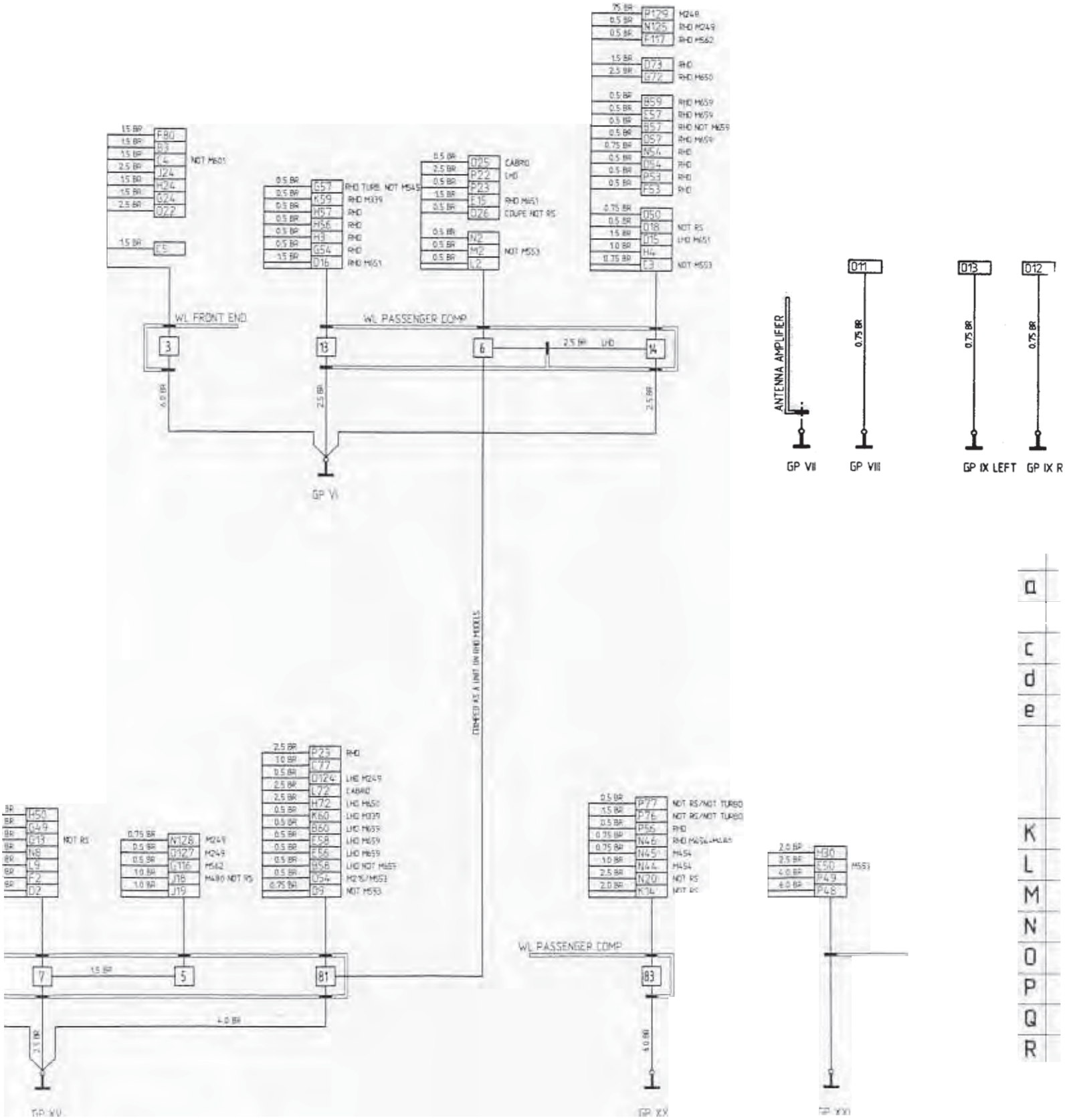
WL FRONT END
WL PASSENGER COMP
GP VI
GP VII
GP VIII
GP IX LEFT
GP IX R
ANTENNA AMPLIFIER
NOT M601
RHD TURB NOT M545
RHD M639
RHD
RHD M651
CABRIO
LHD
RHD M651
COUPE NOT RS
NOT M553
RHD M249
RHD M562
RHD M659
RHD NOT M659
NOT RS
LHD M651
LHD M249
LHD M659
LHD NOT M659
NOT M553
NOT RS/NOT TURBO
RHD M256/M545
M454
M454
NOT RS
M553
a
c
d
e
K
L
M
N
O
P
Q
R
F
G
H
J
K
L

L M N O P

CODE	NOTE	POSITION IN VEHICLE LHD
GP I	LUGGAGE COMPARTMENT, WHEEL HOUSING LEFT	2cP
GP II	LUGGAGE COMPARTMENT, WHEEL HOUSING RIGHT	[illegible]
GP [illegible]	GROUND OF POWER CONSUMERS, UNDER SEAT LEFT	
[illegible]	ENGINE ELECTRONICS/TIPTRONIC	[illegible]
[illegible]	CENTRAL ELECTRIC, ON SIDE MEMBER RIGHT	[illegible]
[illegible]	ANTENNA AMPLIFIER ON SIDE MEMBER LEFT	[illegible]
GP VIII	INSIDE LIGHT CONVERTIBLE, ROOF CENTRE FRONT	[illegible]
GP IX	INSIDE LIGHT, ROOF RIGHT	[illegible]
GP IX	INSIDE LIGHT, ROOF LEFT	11aP
GP X	BATTERY, LUGGAGE COMPARTMENT LEFT	3cP
GP XI	GROUND STRAP (STARTER, TRANSMISSION, ENGINE, BODY)	[illegible]
GP XII	ENGINE COMPARTMENT REAR LEFT	
GP XIV	ENGINE COMPARTMENT REAR RIGHT	[illegible]
GP XV	INSTRUMENTS, SIDE MEMBER LEFT	[illegible]
GP XX	SEAT CROSS MEMBER, UNDER SEAT RIGHT	[illegible]
GP XXI	GROUND OF POWER CONSUMERS, CAMSHAFT CASING CYL.3	15cP

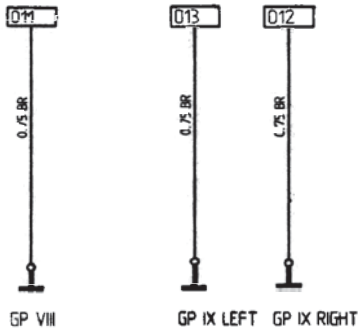

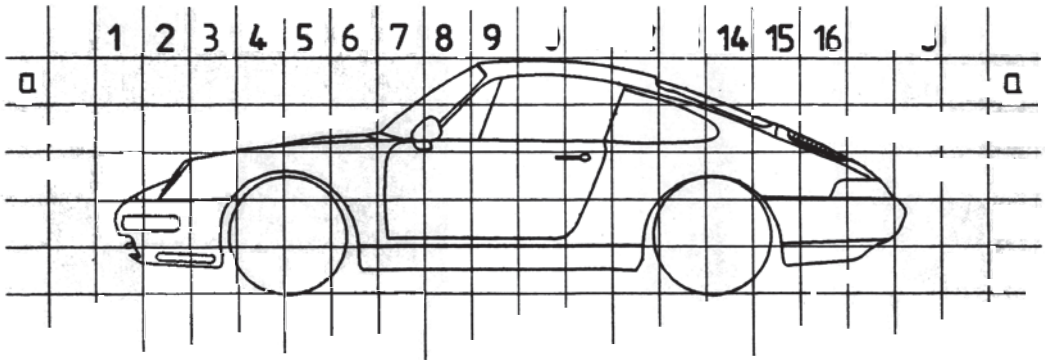

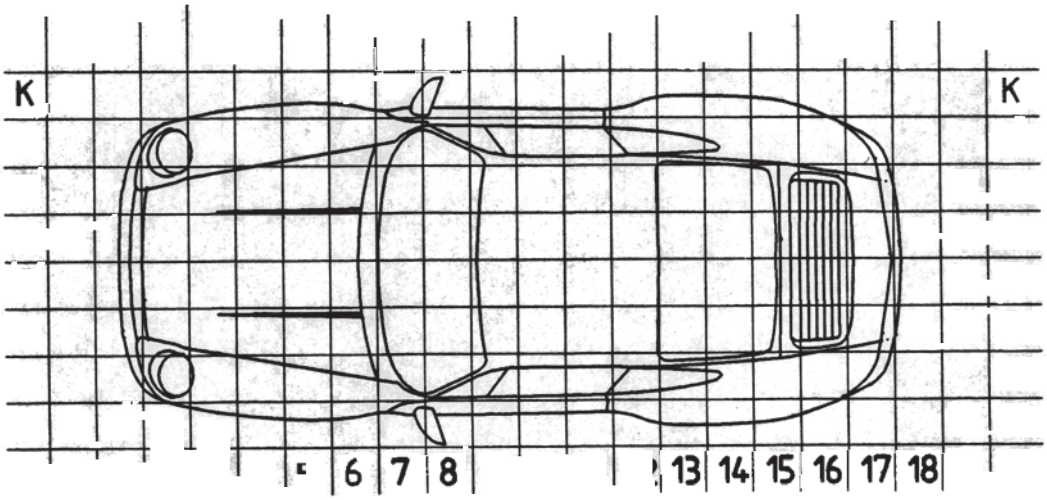

131 132 133 134 135 136 137 138 139 140

CONSTRUCTION COMPONENTS

A B C D E

CONSTRUCTION COMPONENTS

DESIGNATION, FUNCTION	POSITION IN VEHICLE LHD	POSITION IN VEHICLE RHD	NOTE	FIELD WIRING
ALARM HORN	13dP	13dP	REAR LH CROSSMEMBER	J20
[illegible]	7bL	7bQ	IN LUGGAGE COMPARTMENT	
[illegible]	3dP	3dP	IN LUGGAGE COMPARTMENT	
[illegible]	4cL	4cL	IN LUGGAGE COMPARTMENT RIGHT	
AMPLIFER	9eM	9eM	UNDER THE SEAT RIGHT	
BLOWER FINAL STAGE	6bN	6bN	IN LUGGAGE COMPARTMENT	
	16cO	16cO	ON ENGINE	H30
	6cM	6cM	IN LUGGAGE COMPARTMENT	G30
	6cP	6cP	IN LUGGAGE COMPARTMENT	F30
	1dO	1dO	IN LUGGAGE COMPARTMENT	
	14dN	14dN	BY TRANSMISSION RIGHT	
	2dQ	2dQ	IN WHEEL HOUSING FRONT LEFT	[illegible]
	6dP	6dN	BY CLUTCH PEDAL UNDER FLOOR PANEL	
	16cP	16cP	CARRIER PLATE IN ENGINE COMPARTMENT	
	2dM	2dM	IN LUGGAGE COMPARTMENT	
	6cO	6cO	ON INTRUMENT PANEL	
	9eM	9eM	UNDER THE SEAT RIGHT	
	10dP	10dP	UNDER THE SEAT LEFT	
[illegible]	7cM	7cP	ON RH SIDE OF TRANSVERSE WALL	
[illegible]	7cO	7cN	ON INTRUMENT PANEL	
[illegible]	6cM	6cM	CENTRAL ELECTRIC	[illegible]
[illegible]	[illegible]	[illegible]	[illegible]	[illegible]
[illegible]	[illegible]	[illegible]	[illegible]	[illegible]
[illegible]	6cM	6cM	IN LUGGAGE COMPARTMENT	—
CENTRAL INFORMER	7cP	7cM	ON FIREWALL	M32
DIAGNOSIS CONNECTION	7cL	7cQ	IN PASSENGER'S FOOTWELL	G50
[illegible]	[illegible]	[illegible]	[illegible]	[illegible]
ENGINE SPEED SENSOR	[illegible]	[illegible]	[illegible]	[illegible]
ENGINE TEMPERATURE SENSOR	[illegible]	[illegible]	[illegible]	[illegible]
FLASHER	[illegible]	[illegible]	[illegible]	[illegible]
FUEL PUMP	6eM	6eP	BEHIND THE BASE	[illegible]
FUSES ENGINE COMPARTMENT	16cP	16cP	CARRIER PLATE IN ENGINE COMPARTMENT	L28
FUSE IN LUGGAGE COMPARTMENT	4cP	4cP	BELOW HYDRAULIC UNIT COVER	037/1
FUEL LEVEL SENSOR	5cM	5cP	IN FUEL TANK	K51
GONG RELAY	7bQ	—	LH SIDE IN FRONT OF INSTRUMENTS	P53/5
HALL SENSOR	17cO	17cO	ON DISTRIBUTOR	
HYDRALLIC UNIT ABS	3dP	3dP	IN LUGGAGE COMPARTMENT	
HEADLIGHT CLEANER PUMP	3cQ	3cQ	BY WASHING FLUID RESERVOIR IN WHEEL HOUSING FL	A79/
HEADLIGHT CLEANER RELAY	6cM	6cM	CENTRAL ELECTRIC	E78
IDLE SPEED POSITIONER	15bN	15bN	ON ENGINE	H/14
IGNITION CONTROL UNIT	11dP	11dP	UNDER THE SEAT LEFT	
IGNITION COIL I	17cP	17cP	ON ENGINE	L41
IGNITION COIL II	17cP	17cP	ON ENGINE	L41
KICK-DOWN SWITCH	6dO	6dM	BY ACCELERATOR PEDAL UNDER FLOOR PANEL	M122
KNOCK SENSOR CYL.1-3	15cP	15cP	ON ENGINE	A47
[illegible]	16cN	16cN	ON ENGINE	A47
LATERAL ACCELERATION SENSOR TIPTRONIC TRANSMISSION	[illegible]	[illegible]	[illegible]	[illegible]
LIGHTS ON BUZZER				
MFI + DI RELAY	6cM	6cM	CENTRAL ELECTRIC	J44
MFI + DI CONTROL UNIT	9eP	9eP	UNDER THE SEAT LEFT	B-G4
	16bO	16bO	ON ENGINE	A43
MICRO SWITCH ROOF RIGHT	9aN	9aN	AT CONVERTIBLE TOP FRAME	M79
MICRO SWITCH ROOF LEFT	9aO	9aO	AT CONVERTIBLE TOP FRAME	L79
MICRO SWITCH REAR SPOLIER EXTENDED	16bP	16bP	ON TAILGATE	O79
MICRO SWITCH REAR SPOILER RETRACTED	16bP	16bP	ON TAILGATE	O79

DESIGNATION, FUNCTION	POSITION IN VEHICLE LHD	POSITION IN VEHICLE RHD	NOTE	FIELD IN WIRING DIAGRAM
MICRO SWITCH TDC	12cL	12cL	BEHIND SIDE PANEL COVERING	O71
	12cL	12cL	BEHIND SIDE PANEL COVERING	P71
	12aN	12aN	IN ROOF	G73
MOTOR TOP CONTROL RIGHT	15cN	15cN	BEHIND REAR SEAT	N71
MOTOR TOP CONTROL LEFT	15cO	15cO	BEHIND REAR SEAT	N71
MOTOR TOP LOCK RIGHT	9aN	9aN	AT CONVERTIBLE TOP FRAME	K/L79
	9aO	9aO	AT CONVERTIBLE TOP FRAME	J/K79
	16cP	16cP	ON ENGINE	G30
	15cN	15cN	ON ENGINE	A42
OUTSIDE TEMP. SENSOR	2dP	2dP	FRONT LH BUMPER	A60
OXYGEN SENSORS CYL.1-3	16dP	16dP	ON ENGINE	F150
OXYGEN SENSORS CYL.4-6	16dM	16dM	ON ENGINE	D150
OIL PRESSURE SENSOR/SWITCH	14cN	14cN	ON ENGINE	A54
OIL COOLER BLOWER	2dL	2dL	IN WHEEL HOUSING FRONT RIGHT	O21
OIL LEVEL SENSOR	12cK	12cK	IN WHEEL HOUSING REAR RIGHT	E51
OIL TEMPERATURE SENSOR FOR INSTRUMENT	14cN	14cN	ON ENGINE	A53
OIL TEMPERATURE SENSOR FOR OIL COOLER BLOWER	2dL	2dL	IN WHEEL HOUSING FRONT RIGHT	J21
PRESSURE TRANSDUCER, CHARGE AIR PRESSURE	16bM	16bM	ON ENGINE	A56
PRESSURE SWITCH AIR CONDITIONING SYSTEM	6bO	6bO	IN LUGGAGE COMPARTMENT	E30
PRESSURE WARNING SWITCH	1dO	1dO	IN LUGGAGE COMPARTMENT	M/N39
REAR FOG LIGHT CUTOUT RELAY	17dN	17dN	BEHIND REAR PANEL	H108
REAR WINDOW WIPER RELAY	15bO	15bO	ON REAR WINDOW WIPER MOTOR	E71
	16dP	16dP	IN ENGINE COMPARTMENT	J30
	2dQ	2dQ	IN WHEEL HOUSING FRONT LEFT	M21
RESISTOR OIL COOLER BLOWER	2dL	2dL	IN WHEEL HOUSING FRONT RIGHT	
RELAY CONDENSER BLOWER	6cM	6cM	CENTRAL ELECTRIC	L21
RELAY AC COMPRESSOR	16cP	16cP	CARRIER PLATE IN ENGINE COMPARTMENT	L30
RELAY TWO-TONE HORN	6cM	6cM	CENTRAL ELECTRIC	F78
RELAY POWER WINDOW	6cM	6cM	CENTRAL ELECTRIC	K18/19
RELAY BLOWER ENGINE COMPARTMENT	16cP	16cP	CARRIER PLATE IN ENGINE COMPARTMENT	J/K30
RELAY STARTER TIPTRONIC-TRANSMISSION	6cM	6cM	CENTRAL ELECTRIC	N50
RELAY BACKUP LIGHT	7bQ	7bQ	IN LUGGAGE COMPARTMENT LEFT	
RELAY THERMO SWITCH CATALYTIC CONVERTER	6cM	6cM	CENTRAL ELECTRIC	L/M51
RELAY TERM.X	6cM	6cM	CENTRAL ELECTRIC	J/K44
RELAY TERM.15 E	6cM	6cM	CENTRAL ELECTRIC	K/L44
RELAY RFL - BACKUP LIGHT	6cM	6cM	CENTRAL ELECTRIC	J/K7, A-M94
RELAY FRONT FOG LAMP	6cM	6cM	CENTRAL ELECTRIC	J7, C-094
RELAY OIL COOLER BLOWER	6cM	6cM	CENTRAL ELECTRIC	K21
	4cL	4cL	IN LUGGAGE COMPARTMENT RIGHT	M39
	6cM	6cM	CENTRAL ELECTRIC	H75
RELAY DAYTIME RUNNING LIGHT CANADA	6cM	6cM	CENTRAL ELECTRIC	D1
RELAY FOG LIGHT SWITCH OFF USA/JAPAN	6cM	6cM	CENTRAL ELECTRIC	H-P/94, F/G10
SECONDARY AIR PUMP RELAY	17cP	17cP	ON CARRIER ON LH SIDE IN ENGINE COMPARTMENT	A50
STOP LIGHT SWITCH	6dP	6dM	AT THE BRAKE PEDAL BELOW THE FLOOR PANEL	N9
	12dO	12dO	ON GEARBOX	D-F129
SHIFT VALVE RESONANCE FLAP	--	15bN	ON ENGINE	H41
STARTER	14dN	14dN	BY CLUTCH HOUSING RIGHT	P49/50
SECONDARY AIR PUMP	16cN	16cN	ON ENGINE	D/E50
	15bN	15bN	ON THROTTLE VALVE ASSEMBLY	A44
TIMING VALVE	16cM	16cM	ON ENGINE	L150
TANK VENTING VALVE	16cP	16cP	ON ENGINE	K41
TWO-TONE HORN I	3cL	3cL	IN WHEEL HOUSING FRONT RIGHT	F80
TWO-TONE HORN II	3cL	3cL	IN WHEEL HOUSING FRONT RIGHT	G80
V-BELT CONTROL	17dO	17dO	ON ENGINE REAR MIDDLE	A55
WINDSHIELD WASHING FLUID PUMP	3cO	3cO	BY WASHING FLUID RESERVOIR IN WHEEL HOUSING FL	A79
WIPER INTERMITTENT CONTROL RELAY	6cM	6cM	CENTRAL ELECTRIC	F/G75

	L	M	N	O	P

FIELD IN WIRING DIAGRAM
O71
P71
G73
N71
N71
K/L79
J/K79
G30
A42
A60
F150
D150
A54
O21
E51
A53
J21
A56
E30
M/N39
H108
E71
J30
M21
M21
L21
L30
F78
K18/19
J/K30
N50
J122
L/M51
J/K44
K/L44
J/K7, A-M94
J7, C-094
K21
M39
H75
D1
H-P/94, F/G10
A50
N9
D-F129
H41
P49/50
D/E50
A44
L150
K41
F80
G80
A55
A78
F/G75

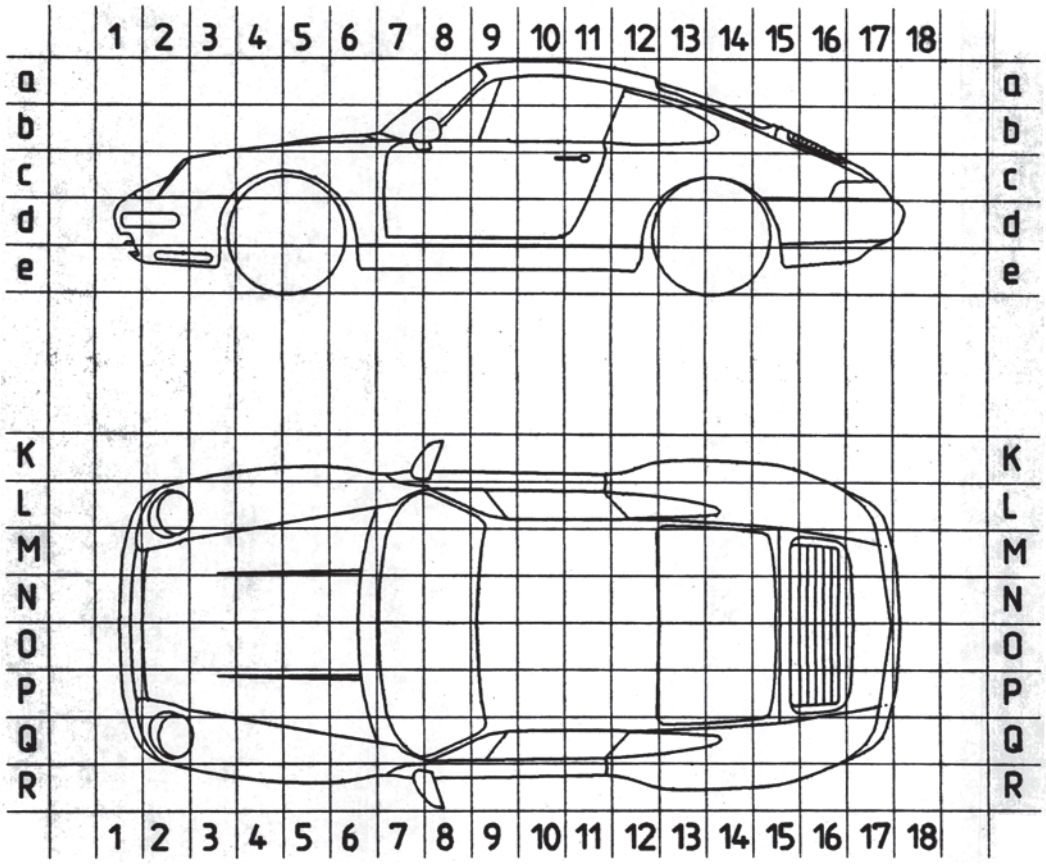

911 Carrera (993) MODEL 95/2 SHEET 16

CONNECTORS AND ABBREVIATIONS

A B C D E

PLUG CONNECTIONS

CODE	NUMBER OF PINS	DESIGNATION, FUNCTION	POSITION IN VEHICLE LHD	POSITION IN VEHICLE RHD	NOTE
X 1/1	10	CONNECTION WL PASSENGER COMPARTMENT/ WL FRONT END	6cL	6cL	
X 1/2	10	CONNECTION WL PASSENGER COMPARTMENT/ WL FRONT END	6cL	6cL	
X 3	14	CONNECTION WL PASSENGER COMPARTMENT/ WL MOTOR	16cP	16cP	CARRIER PLATE
X4/1	14	CONNECTION WL PASSENGER COMPARTMENT/ WL MFI + DI	9eP	9eP	UNDER THE SEA
X4/2	14	CONNECTION WL PASSENGER COMPARTMENT/ WL MFI + DI	9eP	9eP	UNDER THE SEA
X11/1	14	CONNECTION WL PASSENGER COMPARTMENT/ WL DOOR DRIVER'S SIDE	6cQ	6cL	UNDER THE INST
X11/2	10	CONNECTION WL PASSENGER COMPARTMENT/ WL DOOR DRIVER'S SIDE	6cQ	6cL	UNDER THE INST
X12/1	12	CONNECTION WL PASSENGER COMPARTMENT/ WL DOOR PASSENGER'S SIDE	6cL	6cQ	UNDER THE INST
X12/2	10	CONNECTION WL PASSENGER COMPARTMENT/ WL DOOR PASSENGER'S SIDE	6cL	6cQ	UNDER THE INST
X20	14	CONNECTION WL PASSENGER COMPARTMENT/ WL HEATER, AIR CONDITIONER	6cM	6cM	UNDER INSTRUME
X24	10	CONNECTION WL PASSENGER COMPARTMENT/ WL TAILGATE	16cL	16cL	BOX RH SIDE OF
X25	10	CONNECTION WL PASSENGER COMPARTMENT/ WL TAIL LIGHTS	16cL	16cL	BOX RH SIDE OF
X26	12	CONNECTION WL PASSENGER COMPARTMENT/ WL CONVERTIBLE TOP	12cL	12cL	BEHIND SIDE PAN
X28	6	CONNECTION WL PASSENGER COMPARTMENT/ WL IGNITION LOCK	6cP	6cM	ON STEERING CO
X29	2	CONNECTION WL PASSENGER COMPARTMENT/ OIL TANK SENSOR	16cL	16cL	BOX RH SIDE OF
X31	4	CONNECTION WL PASSENGER COMPARTMENT/ WL INSIDE LIGHTS COUPE	15bM	15bM	BELOW THE PAR
X32	2	CONNECTION WL PASSENGER COMPARTMENT/ WL INSIDE LIGHTS CONVERTIBLE	6cQ	6cQ	UNDER INSTRUME
X33	2	CONNECTION WL PASSENGER COMPARTMENT/ WL SIDE TURN SIGNAL LEFT	7bQ	7bQ	IN LUGGAGE COM
X34	2	CONNECTION WL PASSENGER COMPARTMENT/ WL SIDE TURN SIGNAL RIGHT	7bL	7bL	IN LUGGAGE COM
X36	4	CONNECTION WL PASSENGER COMPARTMENT/ SWITCH LIFTING CONVERTIBLE TOP	12cL	12cL	BEHIND SIDE PAN
X37	8	CONNECTION WL PASSENGER COMPARTMENT/ WL SEAT LEFT	9eP	9eN	UNDER THE DRIV
X38	8	CONNECTION WL PASSENGER COMPARTMENT/ WL SEAT RIGHT	9eN	9eP	UNDER THE PAS.
X39	6	CONNECTION WL PASSENGER COMPARTMENT/ WL LUGGAGE COMPARTMENT HOOD	7bL	7bL	ON RH SIDE OF
X60	21	CONNECTION WL MOTOR/ WL MFI + DI	16cP	16cP	CARRIER PLATE
X65	6	CONNECTION WL DOOR DRIVER'S SIDE/ WL OUTSIDE MIRROR LEFT	8cR	8cK	DRIVER'S DOOR
X66	6	CONNECTION WL DOOR PASSENGER'S SIDE/ WL OUTSIDE MIRROR RIGHT	8cK	8cR	PASSENGER'S D
X69	14	CONNECTION WL FRONT END/ WL HEATER, AIR CONDITIONER	6cM	6cM	IN LUGGAGE COM

M - NUMBERS

CONNEC

M 113	CANADA VERSION (DAYTIME RUNNING LIGHT)	M 487	NORWAY
M 139	ADJUSTABLE SEAT HEATING, LEFT SEAT	M 490	AUDIO OPTION PACK
M 193	JAPAN VERSION	M 513	LUMBAR SUPPORT SEAT RIGHT
M 215	SAUDI-ARABIA VERSION	M 530	CODE LOCK
M 224	AUTOMATIC BRAKE DIFFERENTIAL	M 545	LARGE TANK
M 249	AUTOMATIC TRANSMISSION (TIPTRONIC)	M 553	USA / CANADA VERSION
M 339	FWD	M 562	AIRBAG
M 340	ADJUSTABLE SEAT HEATING, RIGHT SEAT	M 564	WITHOUT AIRBAG
M 383	SPORT SEAT LEFT ELECTRIC HEIGHT ADJUSTMENT	M 573	AIR CONDITIONING SYSTEM
M 387	SPORT SEAT RIGHT ELECTRIC HEIGHT ADJUSTMENT	M 576	WITHOUT REAR FOG LIGHT
M 419	REAR PACKAGE TRAY	M 586	LUMBAR SUPPORT SEAT LEFT
M 425	REAR WINDOW WIPER	M 601	LITRONIC
M 437	COMFORT SEAT LEFT	M 602	HIGH MOUNTED STOP LIGHT
M 438	COMFORT SEAT RIGHT	M 605	HEADLIGHT VERTICAL AIM CONTROL
M 439	ELECTRIC CONVERTIBLE TOP	M 614	TELEPHONE PREPARATION
M 441	RADIO PREPARATION	M 650	POWER SUNROOF
M 451	LIMITED RADIO PREPARATION	M 651	POWER WINDOWS
M 454	CRUISE CONTROL	M 659	ON-BOARD COMPUTER
M 480	TRANSMISSION	M 680	DIGITAL SOUND PACKAGE

	FIELD
ARTMENT RIGHT	G/H34,K123
	C9,E36,G48,B58/59
	K/L3,J27/28,D48/49,B53/54
	C/D45/46,B55,L143
--	F45/46,B55,G/H148
	E/F16/17,B87/88, F88
UMENT PANEL DIVER'S SIDE	C16 ,F87/88
UMENT PANEL PASSENGER'S SIDE	E/F13,C87/88 ,H88
UMENT PANEL PASSENGER'S SIDE	C14,H87/88
NT PANEL RIGHT	G25/26
NGINE COMPARTMENT	D10,D13/14,D76
NGINE COMPARTMENT	N4-6
	J-M76
	E52
	D12/13,H73
NT PANEL LEFT	N/D12
ARTMENT ON SIDE MEMBER LEFT	D/E9
ARTMENT ON SIDE MEMBER RIGHT	C2
L COVERING	N74
R SEAT	
EGER SEAT	N19,A70,E65/66
GGAGE COMP. LID HINGE	D16,B77
ENGINE COMPARTMENT	B46,E48,K42,B55,M142,M148
	B18/19
DR	B13
	G23/24

ABBREVIATIONS

CODE	MEANING
ABD	AUTOMATIC BRAKE DIFFERENTIAL
ABS	ANTILOCK BRAKING SYSTEM
AC	AIR CONDITIONING SYSTEM
ADL	ADDITIONAL DRIVING LIGHTS
BPAU	BRAKE BOOSTER
BL	BACKUP LIGHT
CL	CLOSE
CLS	CENTRAL LOCKING SYSTEM
CU	CONTROL UNIT
CWL	CENTRAL WARN. LIGHT
CE	CENTRAL ELECTRIC
CP	CONNECTING POINT
CLOCK	CLOCK SIGNAL
CO	CARBON MONOXIDE
DATA	DATA SIGNAL
DEF	DEFROST
DSP	DIGITAL SOUND PACKAGE
DP	DISCONNECTING POINT
DI	ELECTRIC IGNITION SYSTEM WITH KNOCK CONTROL
ESO	ENGINE-SPEED SENSOR OUTPUT
ESS	ENGINE SPEED SENSOR
ETC	ELECTRICAL TRANSMISSION CONTROL
FA	FRONT AXLE
FL	FRONT LEFT
FR	FRONT RIGHT

CODE	
FOG	FOG LI
GP	GROUN
HCS	HEADL
HF	HIGH F
HFM	
HVAC	
INJ. VALVE	
INS.C	
IC	
LED	
LHD	
LF	
NO	NUM
NTC	
OP	
PIN	
POT	
PSD	
PWM	PULSE
PL	PLUG
RA	REAR A
RL	
RR	

TION ---- Z999 99

FIELD INDICATION

TERMINAL ID

P	IGNITION SWITCH POSITION 0	56	LIGHT SWITCH POSITION II
X	IGNITION SWITCH POSITION I+II	56a/56b	HIGH BEAM/LOW BEAM
15	IGNITION SWITCH POSITION II+III	57	LIGHT SWITCH POSITION I
R	IGNITION SWITCH POSITION I+II+III	58	LIGHT SWITCH POSITION I+II
K	DIAGNOSIS K	58R/58L	SIDE MARKER LIGHT RIGHT/LEFT
L	DIAGNOSIS L	58d	INSTRUMENT LIGHTS
30	PERMANENT POSITIVE	Ti	INJECTION SIGNAL
31	GROUND	Tn	ROTATIONAL SPEED SIGNAL
54	STOP LIGHT	61	GENERATOR D+

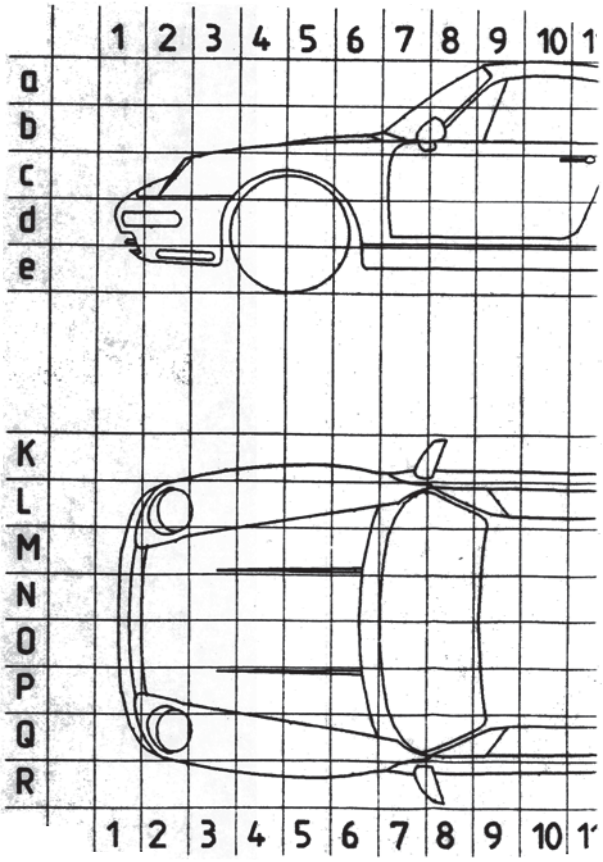

L	M	N	O	P

CODE	MEANING	CODE	MEANING
FOG	FOGLIGHT	RDK	TIRE PRESSURE CONTROL
GP	GROUND POINT	ROW	REST OF WORLD
HCS	HEADLIGHT CLEANING SYSTEM	RHD	RIGHT-HAND DRIVE
HF	HIGH FREQUENCY	RFL	REAR FOG LIGHT
HFM	HOT-FILM AIR MASS METER	SA	SAUDI ARABIA
HVAC	HEADLIGHT VERTICAL AIM CONTROL	SAFETY LAMP	SAFETY LAMP
INJ. VALVE	FUEL INJECTOR	SERVICE	SERVICE
INS.C	INSTRUMENT CLUSTER	SCS	COMBINED STEERING COLUMN SWITCH
IC	IGNITION CIRCUIT	SS	SPEED SENSOR
LED	LIGHT-EMITTING DIODE	THROTTLE	THROTTLE VALVE
LHD	LEFT-HAND DRIVE	TVS	THROTTLE VALVE SENSOR
LF	LOW FREQUENCY	TE	TERMINAL
MFI + DI	DIGITAL ENGINE ELECTRONICS	TEL MUTE	RADIO MUTING CONTROL
MS 2	MOTRONIC 5.2	TI	INJECTION TIME
NO	NUMBER	TN	SPEED
NTC	NEGATIVE TEMPERATURE COEFFICIENT	TURBO	911 TURBO
OP	OPEN	TRP	TWIN-COIL ROTARY POSITIONER
PIN	PIN	USA	USA
POT	POTENTIOMETER	WL	WIRING LOOM
PSD	PORSCHE LIMITED SLIP DIFFERENTIAL	WP	WELD POINT
PWM	PULSE-WIDTH MODULATION	WW	WORLDWIDE
PL	PLUG		
RA	REAR AXLE		
RL	REAR LEFT		
RR	REAR RIGHT		

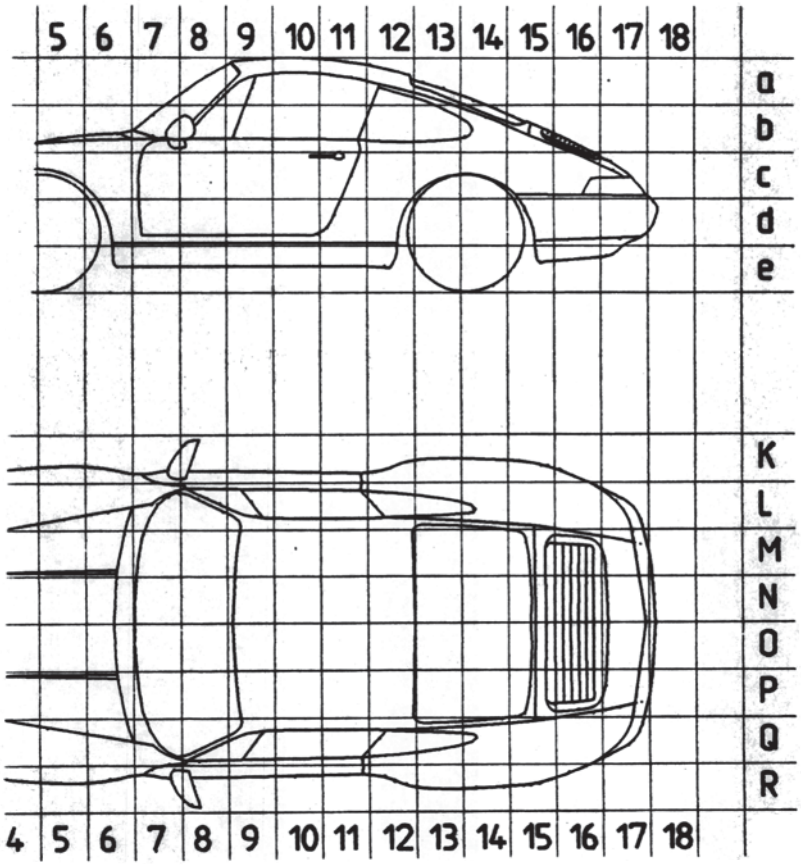

911 Carrera (993) MODEL 95/2 SHEET 17

CENTRAL ELECTRIC

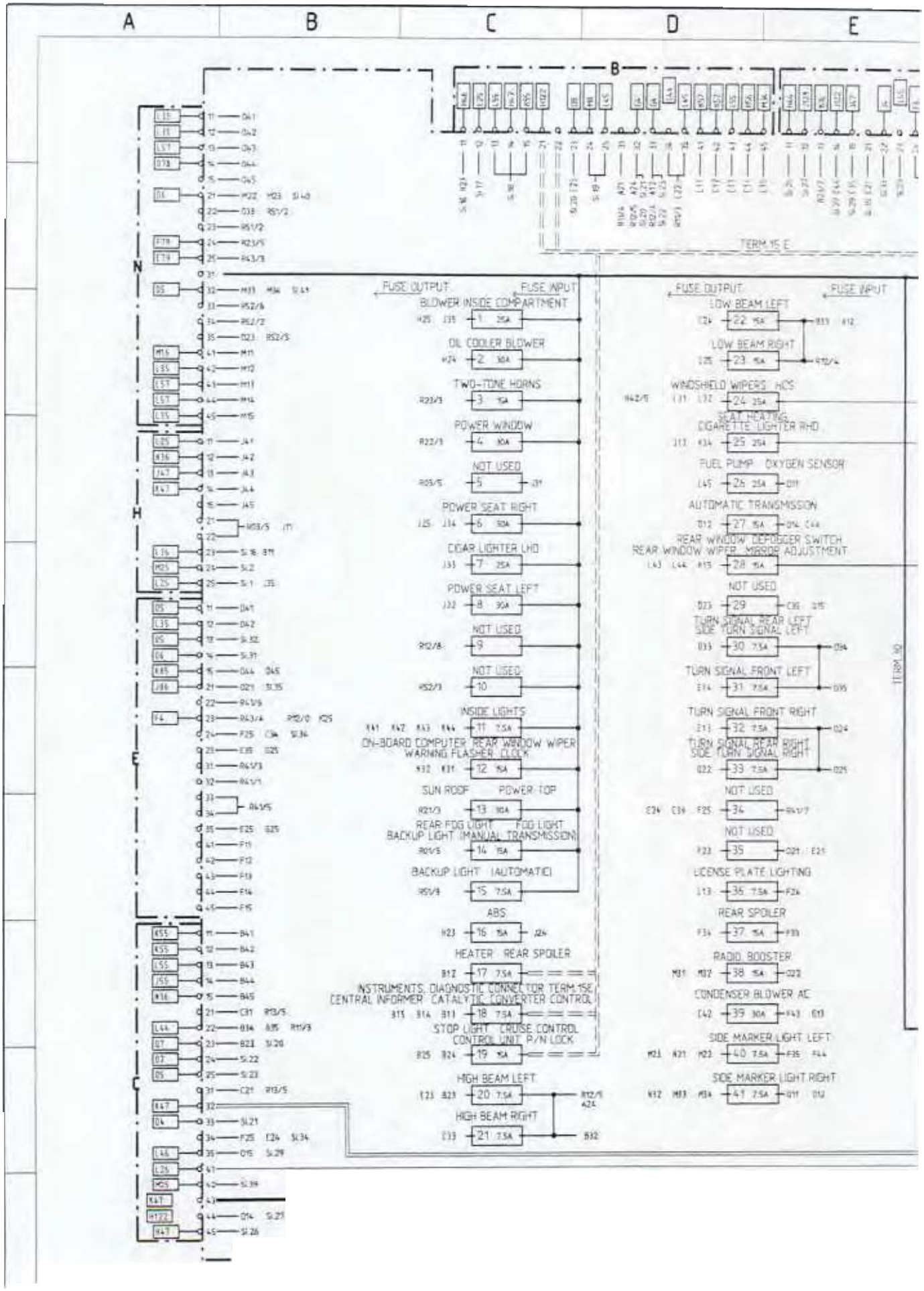

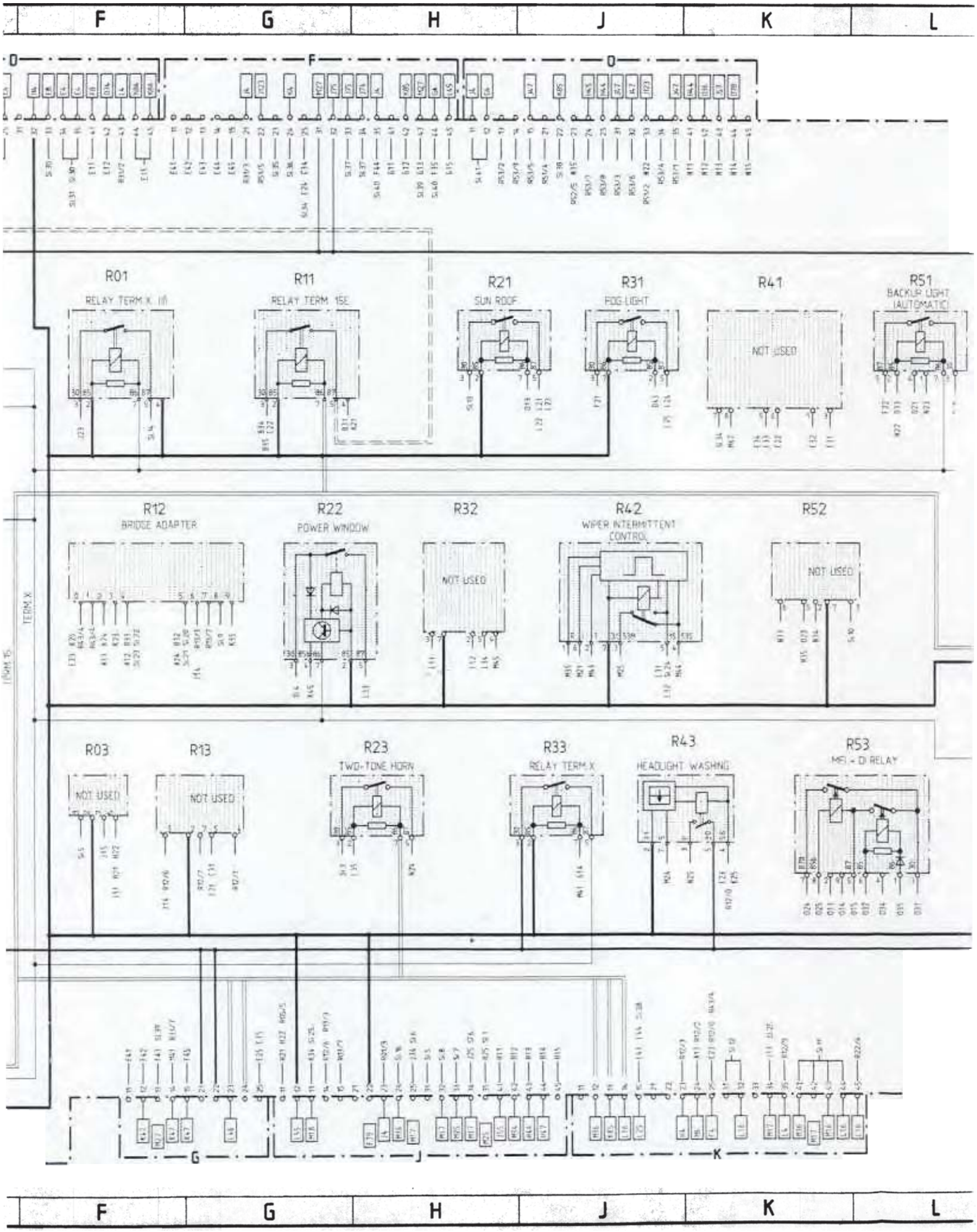
F
G
H
J
K
L
R01
RELAY TERM X, 15
R11
RELAY TERM 15E
R21
SUN ROOF
R31
FOG LIGHT
R41
NOT USED
R51
BACKUP LIGHT (AUTOMATIC)
R12
BRIDGE ADAPTER
R22
POWER WINDOW
R32
NOT USED
R42
WIPER INTERMITTENT CONTROL
R52
NOT USED
TERM X
R03
NOT USED
R13
NOT USED
R23
TWO-TONE HORN
R33
RELAY TERM X
R43
HEADLIGHT WASHING
R53
MFI - D RELAY

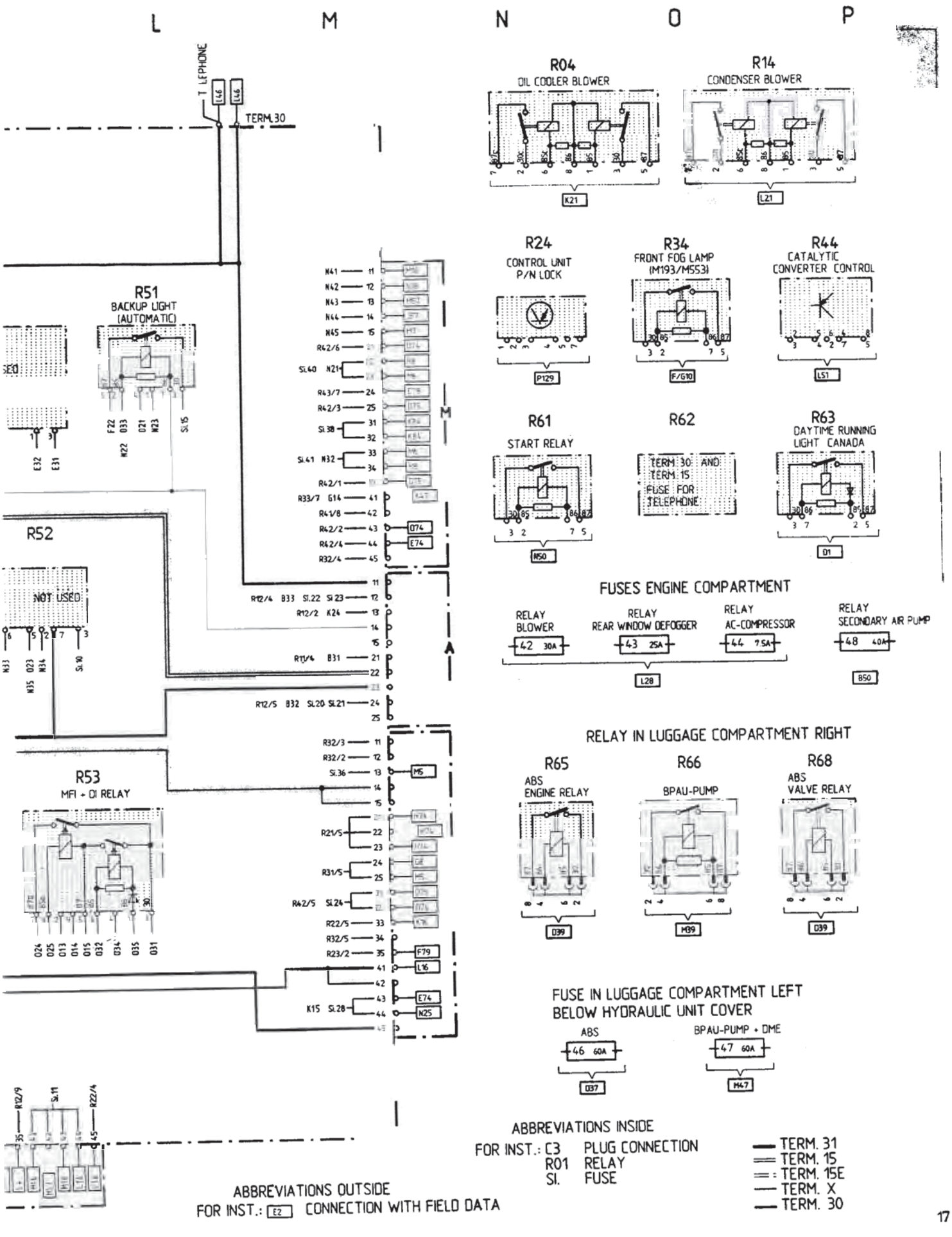
L
M
N
O
P
TELEPHONE
L46
L46
TERM.30
R04
OIL COOLER BLOWER
K21
R14
CONDENSER BLOWER
L21
R24
CONTROL UNIT
P/N LOCK
P129
R34
FRONT FOG LAMP
(M193/M553)
F/G10
R44
CATALYTIC
CONVERTER CONTROL
LS1
R51
BACKUP LIGHT
(AUTOMATIC)
R61
START RELAY
N50
R62
TERM 30 AND
TERM 15
FUSE FOR
TELEPHONE
R63
DAYTIME RUNNING
LIGHT CANADA
D1
R52
NOT USED
FUSES ENGINE COMPARTMENT
RELAY
BLOWER
42 30A
RELAY
REAR WINDOW DEFOGGER
43 25A
RELAY
AC-COMPRESSOR
44 7.5A
L28
RELAY
SECONDARY AIR PUMP
48 40A
B50
RELAY IN LUGGAGE COMPARTMENT RIGHT
R65
ABS
ENGINE RELAY
D39
R66
BPAU-PUMP
M39
R68
ABS
VALVE RELAY
D39
R53
MFI + DI RELAY
FUSE IN LUGGAGE COMPARTMENT LEFT
BELOW HYDRAULIC UNIT COVER
ABS
46 60A
D37
BPAU-PUMP + DME
47 60A
M47
ABBREVIATIONS INSIDE
FOR INST.: C3 PLUG CONNECTION
R01 RELAY
SI. FUSE
TERM. 31
TERM. 15
TERM. 15E
TERM. X
TERM. 30
ABBREVIATIONS OUTSIDE
FOR INST.: E2 CONNECTION WITH FIELD DATA

Repair Manual

911 Carrera
(993)

Volume VIII:
Diagnosis

Dr. Ing. h.c. F. Porsche Aktiengesellschaft

Volume I:	**Overall vehicle – General**	**0**
General	Maintenance, diagnosis	03
Engine		
	Engine	**1**
	Engine – Crankcase, mounting	10
	Engine – Crankshaft, pistons	13
	Engine – Cylinder head, valve drive	15
	Engine – Lubrication	17
	Engine – Cooling	19
	Fuel, exhaust system, engine electrical system	**2**
	Fuel supply, control	20
	Exhaust system – Turbocharging	21
	Fuel system, electronic injection	24
	Fuel system, K-Jetronic	25
	Exhaust system	26
	Starter, power supply, GRA	27
	Ignition system	28

Volume II:	**Transmission**	**3**
Transmission	Clutch, control	30
Manual transmission	Manual transmission – Controls, case	34
	Manual transmission – Gears, shafts, inner operation	35
	Final drive, differential, differential lock	39

Volume III:	**Transmission**	**3**
Transmission	Automatic transmission – Torque converter	32
Automatic transmission	Automatic transmission – Controls, case	37
	Automatic transmission – Gears, control	38
	Final drive, differential, differential lock	39

Volume IV:	**Chassis**	**4**
Chassis	Front wheel suspension, drive shaft	40
	Rear wheel suspension, drive shaft	42
	Wheels, tires, alignment	44
	Anti-Lock System (ABS)	45
	Brakes – Mechanical	46
	Brakes – Hydraulics, regulator, booster	47
	Steering	48

Volume V:	**Body**	**5**
Body	Body front section	50
	Body center section, roof, frame	51
	Body rear section	53
	Hoods, lids	55
	Front doors, Central Locking System	57
	Exterior body equipment	**6**
	Sunroof	60
	Soft top, hardtop	61
	Bumpers	63
	Glasses, window control	64
	Exterior equipment	66
	Interior equipment, passenger protection	68
	Interior body equipment	**7**
	Trim, insulation	70
	Seat frames	72
	Seat upholstery, covers	74

Volume VI:	**Air conditioning**	**8**
Air conditioning	Heater	80
Vehicle electrics	Ventilation	85
	Air conditioning	87
	Auxiliary air conditioning system	88
	Electrical system	**9**
	Instruments, alarm	90
	Radio, telephone, on-board computer	91
	Windshield wipers and washer	92
	Exterior lights, lamps, switches	94
	Interior lights, lamps, switches	96

Volume VII:	**Electrical system**	**9**
Wiring diagrams	Wiring	97

Volume VIII:	**Diagnosis**	**D**
Diagnosis	Self-diagnosis	03
	DME Diagnosis	24
	Tiptronic Diagnosis	37
	PDAS Diagnosis	39
	ABS Diagnosis	45
	Airbag Diagnosis	68
	Heater Diagnosis	80
	Alarm Diagnosis	90

Preface

Structure

The "Technical Literture" for the "911 Carrera (993)" model is basically structured as before, i.e. the structure follows the familiar repair groups.

A new feature is that the structure includes the main groups **0 to 9** and the main group **D**.

Main groups:	0	Complete vehicle – General
	1	Engine
	2	Fuel, exhaust, engine electrical system
	3	Transmission
	4	Chassis
	5	Body
	6	Body equipment, outside
	7	Body equipment, interior
	8	Air conditioning
	9	Electrical system
	D	Diagnosis

Layout

The layout in the below items remains unchanged throughout the repair manual

1. Table of tightening torques
2. Special tools required
3. Exploded views
4. Legends for the exploded views
5. Assembly notes / use of special tools

As a new feature, however, the former item 6 (Repair group diagnosis) is no longer filed in the volume corresponding to the respective repair group. The **Diagnosis test plans / diagnosis procedures** have been combined in a **separate Diagnosis volume** broken down according to the main groups 0 to 9.

Another new feature is that the contents of the "Service Information Technik" are indicated in the Repair Manual. This brochure concentrates on a description of the design and function of components and of the new features introduced for a particular model year.

Service Number

All major repair procedures and repair descriptions are identified by a two- or four-digit **Service Number** completed by two additional digits to identify the work that corresponds to the first six digits of the working position number in the Working Times and Damage Catalog.

Example: 30 37 37 Dismantling and assembling clutch control shaft

Explanation: **30** **37** **37** 50 (full working position number)

Repair group
here: Clutch, control

Component designation
here: Clutch control shaft

Activity
here: Dismantling and assembling

Index
here: Removed

Presentation in the various documents

30 37 37 50	Working position no. from **Working Times and Damage Catalog**, consisting of repair group, component designation, activity and index
30 37 37	Six-digit number in **Repair Manual**, consisting of repair group, component designation and activity
30 37	Service number in **Service Information**, consisting of repair group and component designation

Goal

The introduction of a service number in the "technical literature" is intended to facilitate standardization and positive identification to allow direct cross-referencing among the various documents This is of particular importance with regard to the use of electronic media.

VIII Diagnosis

The Repair Manual of the 911 Carrera (993) also includes the 911 Carrera 4 manual (993 four-wheel drive). The 911 Carrera (993) is the basic model covered by the repair operations described in this Manual. "911 Carrera (993)" is also indicated in the header of each page.

Descriptions of repair operations that deviate for the 911 Carrera 4 will be included after the respective 911 Carrera section. The repair descriptions of both models are separated by a cover page. All pages included after the cover page (separation sheet) have the "911 Carrera 4" heading. To facilitate distinction, the page numbering will start with 100.

D Diagnosis

D	System Tester 9288 Operating Instructions	D - 1
D	Location of diagnosis socket	D - 11

03 Maintenance

03	Maintenance .	03 - 1

24 DME Diagnosis

24 05	System M 04 .	24 - 1

37 Diagnosis Tiptronic

37 01	System G 03	37 - 1
37 01	System G 10	37 - 43

45 Diagnosis Anti-Lock System

54 02	System ABS 5 and System ABS 5 / ABD	45 - 1

68 Airbag Diagnosis

68 01	System B 02 . .	68 - 1
68 01	System B 03 . .	68 - 19

80 Diagnosis Heater System

80 01	System H 05 / H 06	80 - 1

90 Diagnosis Alarm System

90	System I 00 / I 01	90 - 1

Printed in Germany - 22, 1997

Survey of contents of Service Information Technik '95

The Service Information gives a detailed description of the technical features of the new 911 Carrera.

	Rep. Gr.	Page
Engine		
General		1 - 1
Engine cross-sections	10	1 - 4
Full-load curve		1 - 6
Belt pulley	13	1 - 8
Pistons	13	1 - 10
Hydraulic valve lash adjuster	15	1 - 16
Setting the timing	15	1 - 18
USA - auxiliary air pump		1 - 19
Fuel and ignition systems		
General		2 - 1
DME - Schematic	24	2 - 2
Fuel - air flow	24	2 - 3
Exhaust gas flow	26	2 - 5
DME control unit 2.10.1	24	2 - 9
Mass air flow sensor	24	2 - 12
Throttle potentiometer	24	2 - 18
Ignition system	28	2 - 24
Plausibility test		2 - 28
Diagnosis		2 - 29
Auxiliary air pump	26	2 - 33
Power transmission		
Transmission	30	3 - 1
Clutch	30	3 - 2
Manual transmission	34	3 - 3
Transmission ratios		3 - 6
Gear set	35	3 - 8
Synchromesh	35	3 - 9
Final drive	39	3 - 13
Oil supply		3 - 15
Porsche Tiptronic	37	3 - 16
Modifications for the '95 model year		3 - 17

	Rep. Gr.	Page
Running gear		
General		4 - 1
Front axle	40	4 - 2
Steering	48	4 - 7
Rear axle	42	4 - 8
Elasto-kinematic toe correction	42	4 - 12
Coil springs (layout)	42	4 - 13
Wheels, tires	44	4 - 15
Suspension alignment	44	4 - 17
Brakes	47	4 - 20
Bleeding the brakes	47	4 - 23
ABS 5	45	4 - 24
Operation of the ABD	45	4 - 30
Diagnosis ABS/ABD	45	4 - 34
Body		
General		5 - 1
Constructional dimensions	50	5 - 4
Aerodynamics and air ducting	50	5 - 8
Body equipment		
Body equipment		6 - 1
Color scheme as of 1995 model year	60	6 - 1
Windows	64	6 - 8
Airbag system	68	6 - 14
Body - interior trim		
Body - interior trim	70	7 - 1
Seats	72	7 - 5
Heating, air conditioning, ventilation		
Particle filter	85	8 - 1
Air ducting	80	8 - 3
Heating - air conditioning unit	85	8 - 5
Heating - air conditioning unit	87	8 - 6
Series resistor of rear blower	80	8 - 9

	Rep. Gr.	Page
Electrical system		
Instruments	90	9 - 1
Alarm system/central locking system	90	9 - 3
Heated rear window	64	9 - 6
Zentral Information System (Z I)	91	9 - 7
Radio "Bremen RCM 43"	91	9 - 10
New radio connection (VDA)	91	9 - 11
Sound package (M 490)	91	9 - 14
Telephone D - network	91	9 - 17
Windshield wiper and washer system	92	9 - 20
Headlights	94	9 - 23
Front end light cluster	94	9 - 28
Tail lights	94	9 - 29
Engine compartment baseplate	97	9 - 33
Wiring diagram		9 - 36
Summary		
Maintenance		0 - 1
Number ranges		0 - 4
Technical data		0 - 5

System Tester 9288 Operating Instructions

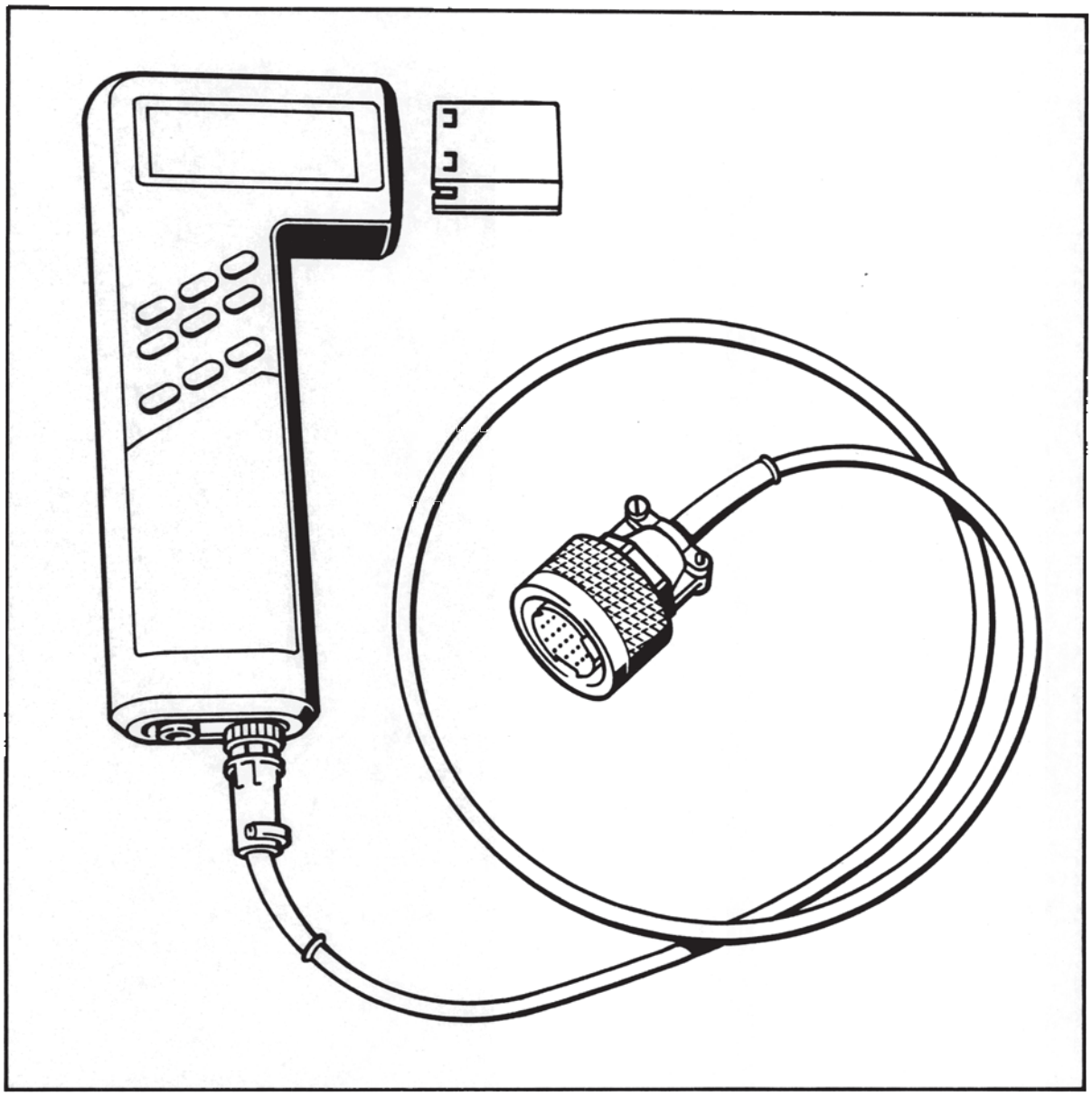

General information

Usage

The System Tester 9288 is a self-diagnosis tester with microprocessor control.

It allows all systems fitted with a diagnostics interface to ISO standards to be checked. The following operations may be carried out:

- Reading out the fault memory
- Checking the actuators (drive links)
- Checking the switching inputs
- System adaptation
- Knock sensing
- Reading out the actual values

Faults

The System Tester 9288 is a sophisticated electronic device. To prevent damage to the unit due to improper handling, please pay close attention to the Operating Instructions.

In case of tester failure, please check the following items before returning the tester for repair:

1. Was the tester operated incorrectly?
2. Is the charging state of the accumulator o.k.?
3. Is the adapter lead o.k.?
   When checking the adapter lead, please note that a highly sensitive electronic adapter circuit is fitted near the 19-pin connector.

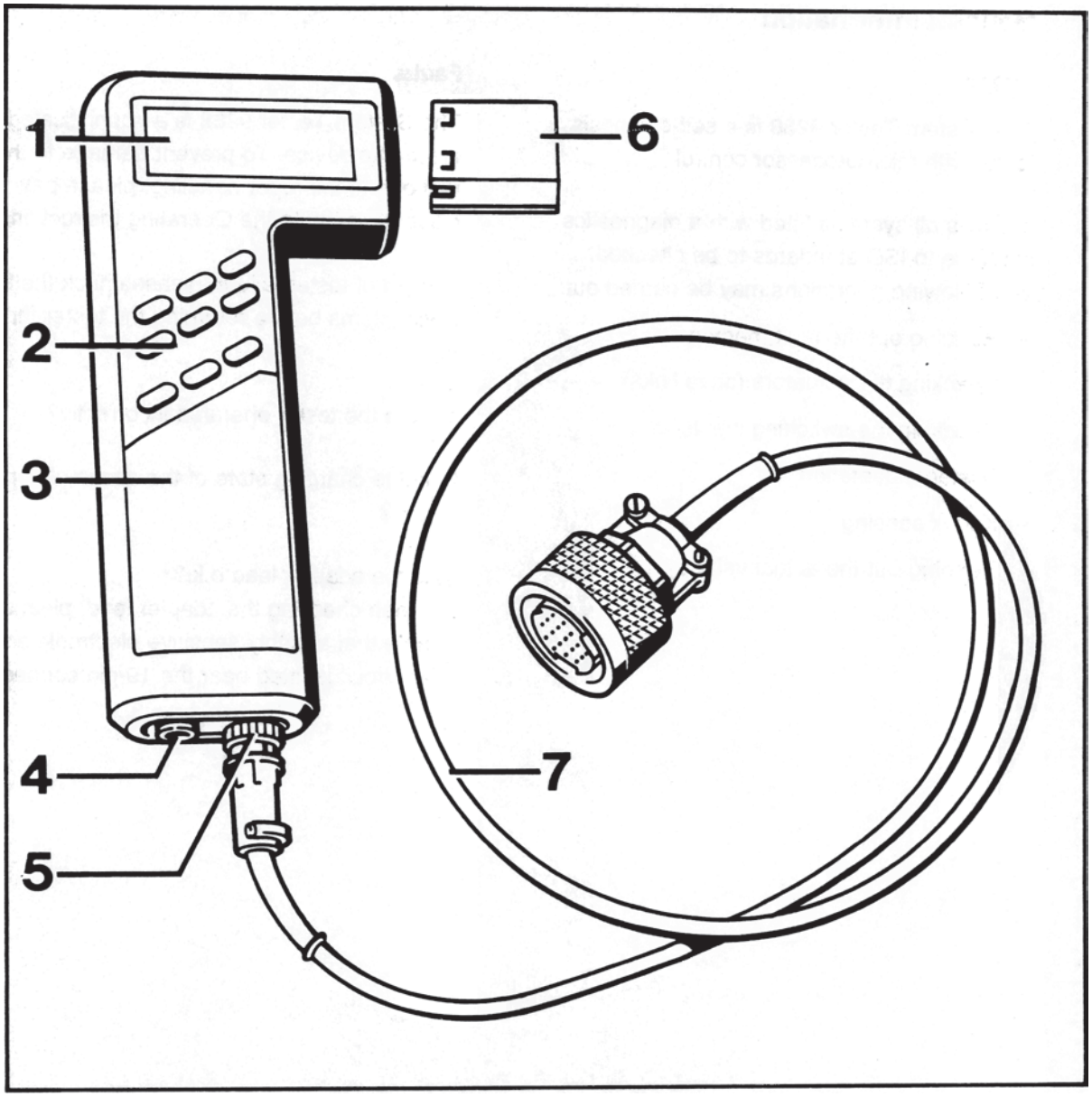

855-03B

Design of the tester

Item, designation, operation	Remarks
① LCD display Operation: Dot matrix 5 x 8 4 lines of 20 characters each Foreign languages possible Illumination	If the System Tester 9288 is switched on without the program module, the Tester is switched off after the self-test is run and a note concerning the missing program module is displayed.
② Keyboard Operation: Keys 1, 2, 3 — Select keys Key < > — Paging up and down Key H — For Help menu, e.g.: Illumination Stored displays Control unit overview Printer setting Switch off unit Key N — Return to next higher program level after finishing a test run or return to last display while a test is run. Store display Output stored display 	Switch on: with any key Switch off: (automatic) 180 s after last actuation of any button or if no data stream flows across the serial interface. The last field in the right-hand top corner is filled out completely, i.e. this is a stored display, not a current display.

③ Power supply
If the voltage is insufficient, "Charge accumulator" is displayed. If this warning is not observed, the device is switched off.

Built-in accumulator with NiCd batteries. System Tester 9288 must be off when it is charged for the first time. Charging time > 8 hours	Supplied with tester. After charging: Operating time 4 - 8 hours without illumination 1 - 2 hours with illumination
Connect to vehicle battery via adapter lead (item 7) 9288/1.	Connection to ISO interface Charging power supply
Charger (accessory)	For testing operation and to charge the NiCd batteries

④ Socket for input and output devices
Connection feature for printers (e.g. Epson, IBM, Hewlett Packard (HP), program charging station or similar devices.
For interface terminal assignments, refer to manual of the respective device.
Printer cable for Standard D 25
BOSCH No. 1 684 465 193
Printer cable for Epson
BOSCH No. 1 684 465 194

The System Tester 9288 sends data with the following settings: 8 data bits / 1 start bit / 1 stop bit / No Parity (for printer adaptation)

⑤ Socket for adapter lead 9288/1
Function 1: Reading out the data
Function 2: Connection for power charger

Input for flashing code support.
Charging the fitted accumulator

⑥ Insertable program module

C-MOS!
Do not touch connector!

Operation:
Operating system
LCD triggering of keyboard
Interface communication
Calculations and data transformations

Plug in module:
Remove rubber protection,
Push in module all the way.

⑦ Adapter lead 9288/1

Connection

Observe the following points:

The vehicle must not be in gear (automatic transmission set to N or P) - risk of accidents!

- Work on the vehicle only with the ignition switched off.

After connecting the tester, the instructions indicated under the Test item are displayed on the System Tester 9288.

Charging via battery charger

Connect the System Tester 9288 to the charger (item 5).

Diagnosis

Connect the System Tester 9288 via the adapter line 9288/1 to the diagnostic connector of the vehicle.

Switch on tester and operate according to the instructions displayed.

No diagnosis possible

(refer to page 03 - 3)

Testing

Module contents:

Tracking the establishment of communication, communication with the control unit, reading out the fault memory and selection of the Help menu, drive link diagnosis, input signals, actual values and system adaptation, knock registration.

Connect System Tester 9288 (see above)

Switch on System Tester
(with any key)

Display:

```
Porsche
Eprom module eng
Module level xx.xx.xx
Version x.x
```

If no special instructions are given on this display, you may always switch on with the > key!

Due to the fact that the System Tester 9288 can store fault displays, the following display appears if faults are stored in the display memory:

```
Stored displays
erased?
1 = Yes
3 = No
```

The stored displays may now be erased or printed. To print, press button 3 (do not erase displays) and use the H key to select the Help menu (for Help menu, refer to p. D - 9).

To proceed in the menu, the stored displays must now be erased. A selection of the vehicle models is then displayed.
After a vehicle type has been selected, the following message is displayed:

```
Connect adapter
cable to test plug
Ignition "on"
When completed   >
```

The next display is:

```
Wait
for data
xxxxxxxxxxxxxxxxxxxx
Break off test:  N
```

After a short waiting interval, the System Tester 9288 reports all systems installed in the respective vehicle. If an # is shown in front of the vehicle, this means that at least 1 fault has been stored in the corresponding system.

```
Installed systems
1 = # DME
2 = # ABS/ABD
3 = Airbag >
```

Help menu

The Help menu may be selected from any display by pressing the H key. Return to the start display with the N key.

```
Help menu
1 = Illumination
2 = Turn tester off
3 = CU chart
```

To continue, press e.g. key 1

Key 1

The display illumination is switched on and the system returns to the previous display.

If e.g. the > key is pressed when the help menu is displayed,

```
Help menu
1 = Illumination
2 = Turn tester off
3 = CU chart      >
```

another part of the Help menu is displayed:

```
< Help menu
1 = Printer setting
2 = Baud rate
3 = Stored displays
```

To continue, press e.g. key 1

```
Printer adjustment
1 = IBM
2 = HP Quiet Jet
3 = Epson
```

The printer selection is used to set the tester for the printer model selected.

The printer selected and the set baud rate are highlighted by the # character.

Storing measurement displays (Key)

This key allows all displays to be stored manually. The following displays are stored automatically:

- Control unit identification

  Installed systems

  All faults present

The following note is displayed when the storage limit is reached.

```
Display memory
full!

Return:          N
```

Displaying the stored measurement displays (Key)

The stored displays can be called up with this key.

The stored displays can be displayed for the selected system by using the < or > key.

The system is selected with the keys 1, 2 or 3.

Location of diagnosis socket

The diagnosis socket of the System Tester 9288 is located in the passenger footwell under a separate cover. The cover is held in place with clips.

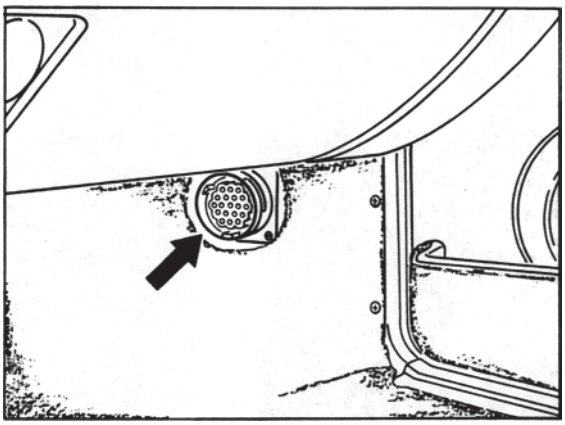

1903-D

Starting with Model Year '95, the diagnostic socket is located on the left-hand side of the center console and is fitted with a plugged-on cover.

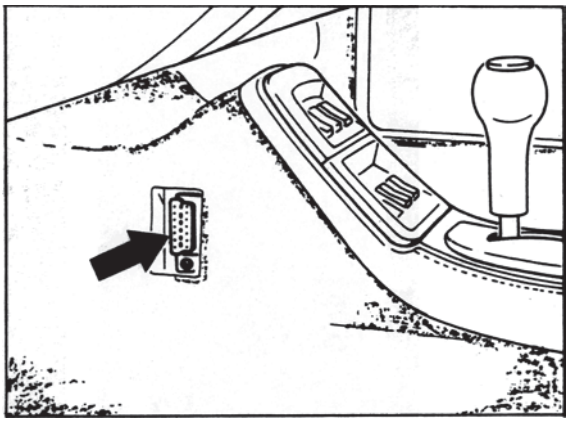

1967-03

Tamper-proofing of control units

As of Model Year '95, the control units located below the driver seat are covered to prevent unauthorized tampering. This cover is protected by shear-off bolts.

If possible, test and/or measure ate the component affected or at the connectors during troubleshooting.

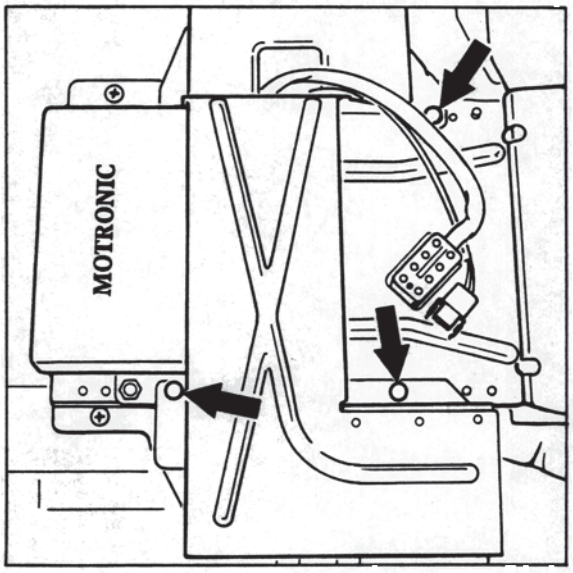

03 Self-diagnosis

General notes

When starting and running the diagnosis, the ignition must be on. If the ignition was off during the diagnosis, diagnosis may be resumed after switching on the ignition and pressing the > key, i.e. the tester returns to the position that the diagnosis was interrupted at.

In the same manner, pressing the > key causes the diagnosis to be resumed from the position at which the diagnosis was interrupted, provided that specified criteria from the below table caused the diagnosis to be interrupted.
The diagnosis cannot be resumed, however, if the criteria are still present, e.g.:
Heater: Oil temperature > 105˚C.

Criteria causing the diagnosis to be interrupted

DME:
Speed > 2000 rpm

ABS/ABD:
Speed > 15 min/n

Tiptronic:
Speed > 1500 rpm

Airbag:
none

Alarm:
none

Heating:

1. Right-hand mixing chamber temp. > 80˚ C
2. Left-hand mixing chamber temp. > 80˚C
3. Rear fan temperature > 95˚C
4. Oil temperature > 105˚C

Criteria for starting the diagnosis

DME:
Speed < 1200 rpm

ABS/ABD:
Road speed = 0 kmh

Tiptronic:
Speed < 1500 rpm
Road speed < 10 km/h (6 mph)

Airbag:
None

Alarm system:
None

Heating:
1. Right-hand mixing chamber temp. < 80˚C
2. Left-hand mixing chamber temp. < 80˚C
3. Rear fan temperature < 95˚C
4. Oil temperature < 105˚C

One troubleshooting requirement is that the testing person

- is familiar with the location of components, operation and technical relationships among the systems to be tested
- is able to read and analyze Porsche wiring diagrams
- is familiar with functions of circuits and relays
- is able to operate and analyze testers such as oscilloscope, voltmeter, ohmmeter and ammeter

The fault text in the display indicates a fault path, i.e. the fault may be present anywhere along the path, starting from the control unit across all connectors up to the component itself.
Before reading out the fault memory, do not try to locate the fault e.g. by pulling off connectors etc. as this would cause a fault to be stored in the fault memory.

Note for System Tester 9288

If the Tester displays "**...not present**"", this may mean:

- Fault was not present when the test condition existed

  In case of an intermittent fault, the + symbol is also displayed.
  Example: "**...not present +**"
  Remedy: Check path visually

  Test conditions under which the fault was tested do not correspond to the ambient conditions when the fault occurred.
  Remedy: Meet the ambient conditions displayed on the tester

If the tester displays "**Signal unplausible**", this may mean that

- the signal of the monitored component is not within the tolerance range

Explanation of the counter displayed on the Tester display

When the fault occurs for the first time, the counter is always set to 50. If a lower figure is displayed, calculate the difference between the 50 and the number indicated. This value is equal to the combination of – Starting procedure, meeting the test requirements and non-presence of the fault –. When the number 0 is reached, the fault path in the control unit is erased.
If the fault status changes from not present to present at a figure below 50, the counter is reset to 50. If a figure above 50 is displayed, the difference corresponds to the number of intermittent contacts that have ocurred. Even when the values are above 50, the counter counts back to 0 when the above combination is met.

No diagnosis possible

If the System Tester 9288 cannot enter the diagnosis, check the folowing items:

Check adapter lead 9288/1 for continuity
Check K and L wire on adapter lead 9288/1 for continuity.

Socket 3 (8-pin connector) to pin 7 (19-pin connector)
Socket 7 (8-pin connector) to pin 8 (19-pin connector)

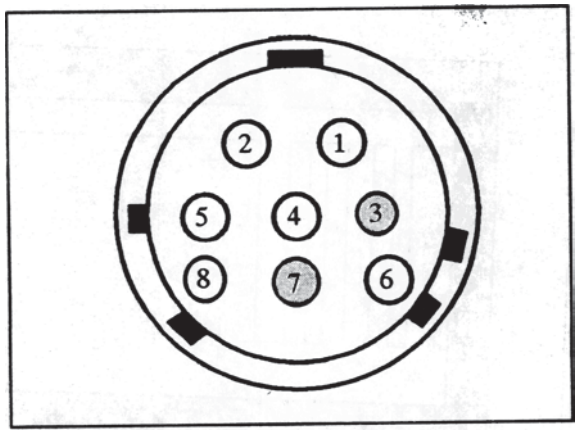

Connector on tester 1211-03

Socket 3 = L wire

Socket 7 = K wire

Check voltage supply
Check ground and terminal 15 on adapter lead 9288/1 for voltage supply.

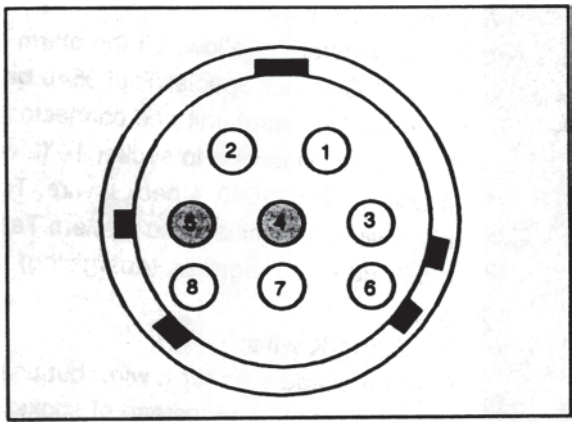

Connector on tester 1203-03

Socket 4 = Ground

Socket 5 = Terminal 15

Check K and L wires with oscilloscope and Special Tool 9540

Checking L wire:
Pull connector 2 (yellow) off the alarm control unit. Connect Special Tool 9540 between alarm control unit and connector 2. Connect oscilloscope to socket 14 (L wire) of Special Tool 9540. Check L wire. To do this, switch on ignition and System Tester 9288 and start diagnosis (energizing).

Checking K wire:
Same procedure as for L wire, but use socket 15 for K wire instead of socket 14 for L wire.

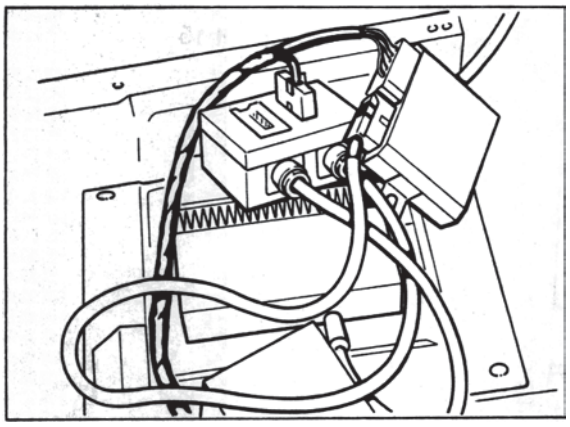

1214 - 03

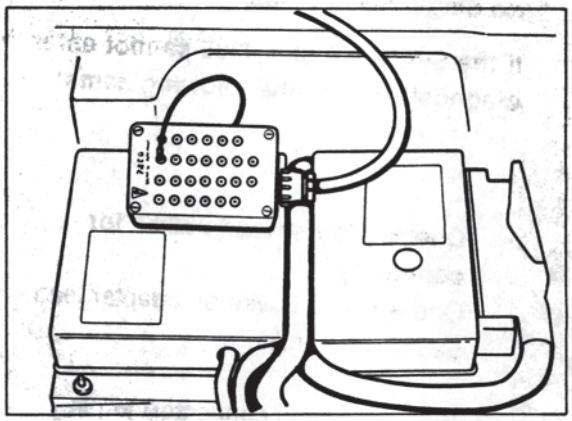

1215 - 03

The following signal must be displayed for the L wire:

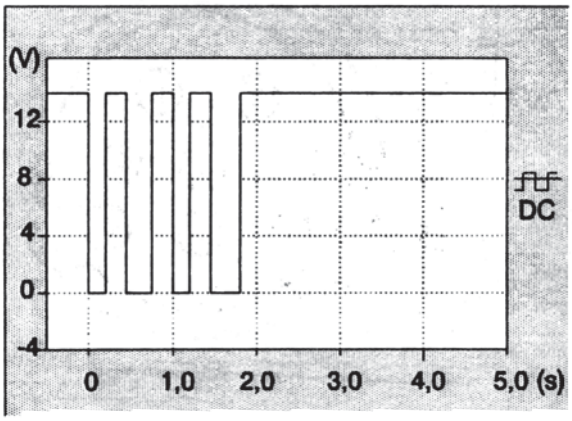

1212 - 03

The following signal must be displayed for the K wire:

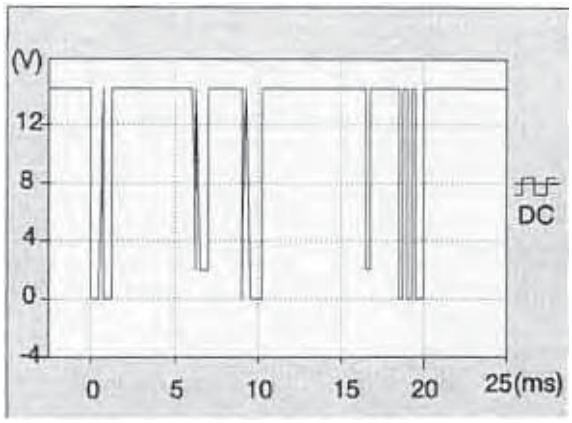

1213 - 03

Note: If the signals displayed deviate from the specifications, this may be due to interference generated by a control unit connected to the K or L wire (for diagnosable systems, refer to wiring diagram). Pull one connector after another off the control units and repeat checking the K and L wires. Start with the alarm control unit as described below. If the last control unit has been disconnected, one of the control units that had been disconnected must be reconnected again. Otherwise no signal can be generated anymore.

Note: The on-board computer (rev counter) is connected to the K and L wires but is not diagnosable. It may cause interferences, however!
If the airbag control unit is disconnected, power supply to term. 15 of the DME control unit is interrupted.

Disconnect alarm control unit and install jumper

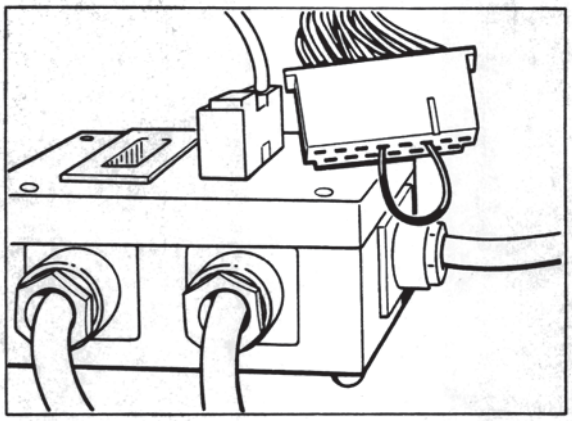

1216 - 03

Pull connector 1 (black) off the alarm control unit. Connect jumper to connector 1 of the alarm control unit, pin 4 and pin 6.

Check signals of the K and L wire again as described above

- **Disconnect other control units**
  Disconnect next control unit, switch on ignition, switch tester off and on again and start diagnosis (energize again).
  Check signals of K and L wire.
  Repeat procedure until all control units have been disconnected.

Check K and L wires for short to ground

Check all control units for continuity to diagnosis socket

Diagnosis / Troubleshooting

DME

System M 04

Contents

	Page
Precautions	24 - 3
Important vehicle information	24 - 4
Equipment	24 - 5
Description of DME control unit	24 - 7
Arrangement and functions of components	24 - 9
Fault memory (Overview of possible fault texts)	24 - 19
Overview - Test point, fault code, fault text	24 - 25
Control unit - terminal configuration	24 - 27
Test plan	24 - 29
Test points	24 - 31
Checking fuel pressure	24 - 53
Check-Engine lamp	24 - 55

Precautions

Increased demands of modern engines on the ignition systems and a desire for freedom from maintenance have led to the introduction of electronic ignition systems in standard production some time ago. Normally the ignition power of electronic systems (of almost all makes) is greater than that of conventional systems and further power increases can be expected in the future. This places electronic ignition systems in a power range where touching live parts or terminals may by hazardous (this applies both to primary and to secondary circuits).

In this context, we must point out that all relevant national safety regulations and legislation must always be observed when working on or testing ignition systems. The ignition (i.e. ignition or power supply) must always be switched off when working on the ignition system.

Such work includes:

- Connecting engine testers, e.g.
  timing light, dwell angle/speed tester, oscilloscope etc.

  Replacing ignition system components, e.g.
  spark plugs, ignition coil, distributor, ignition leads etc.

The above hazardous voltage will be present in the entire system should it be necessary to switch on the ignition for ignition tests or engine adjustments.

Consequently, sources of hazardous voltages are not limited to the individual components of the ignition system (such as distributor, ignition coil, control unit, ignition tackle etc.) but are also present on wiring harnesses, plug connections and testers.

Important Vehicle Information

Always turn off the ignition or disconnect the battery for resistance tests. (If this is not done the tester may destroyed).

Always disconnect the rpm sensor plug for compression tests. (If this is not done, hazardous high voltages and insulations damage to the ignition coil, high-voltage distributor and ignition leads may result).

The specified ignition coil (refer to Order No.) must not be replaced by a different coil.

Never connect a suppression capacitor to ignition coil terminals 1 and 15.

Never connect ignition coil terminal 1 to ground for burglar alarm. (Ignition coil and control unit may be destroyed).

Never connect the positive battery terminal or a test lamp to ignition coil terminal 1 (The control unit will be destroyed).

Never disconnect the ignition lead from ignition coil terminal 4 to high-voltage distributor terminal 4 while the engine is running.

Voltage flashover from ignition coil terminal 4 to coil terminals 1 and 15 must not occur. (Control unit may be destroyed).

To avoid destruction of the control unit, the secondary circuit ot the ignition system must be suppressed with at least 4 kΩ, the original distributor rotor with 1 kΩ suppression resistance having to be installed.

Disconnect DME control unit only after turning off the ignition.

Flashover or disruptive discharge in the area of the high-voltage distributor cap (poor insulation) may destroy the control unit.

Never disconnect the battery when the engine is running.

Battery polarity reversal could lead to destruction of the ignition coil and the DME control unit.

External engine starting with than 16 V or with a boost battery charger is not permitted.

When pulling off the connectors, e.g for mass air flow sensor, throttle switch, injection valves etc., make sure the inside gasket is not lost.

Always follow the accident prevention regulations when working on the fuel system.

Equipment

Equipment Required for DME Testing:

- Diagnostics tester 9288 with connecting leads

  1 oscilloscope approved by Porsche

  1 digital display multimeter with an internal resistance of at least 50 kW

  1 Bosch L-Jetronic test lead, Bosch No. 1684 463 093 (check lead for correct polarity at plugs).

  2 control unit plug test leads (shop-made) with 2 tab connectors No. 17.457.2 fitted to avoid damage to the plug terminals in the control unit plug during testing.

  2 adapter test leads, consisting of:
  4 plug connectors N 017.483.1 with
  2 leads approx. 150 mm long, soldered.

  1 three-pin test lead (e.g. VAG 1501).

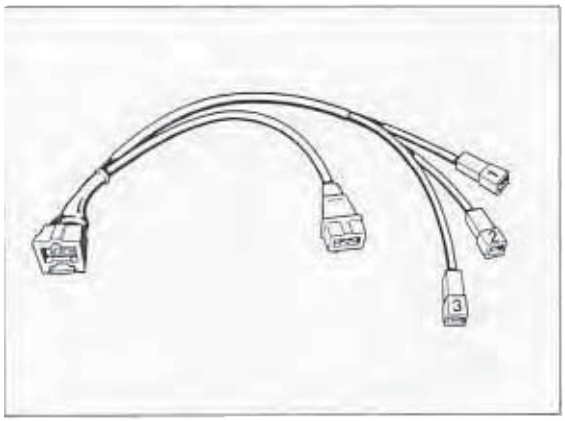

  2 control unit plug test leads (shop-made) with 4 tab connectors N 17.457.2.

The test leads must always be used for the tests!

All sender and ignition timing signals of Porsche vehicles can be checked with the engine testers recommended by Porsche. Since instructions for connection of testers on a car will differ depending on the equipment manufacturer, these instructions must always be followed to ensure correct tester connection.

The following signals can be checked with the oscilloscope:

Engine speed

Vehicle speed

ti (injection time)

Idle stabilizer

Hall signal

Tank venting signal

Note for USA:

If a fault that affects exhaust gas composition is detected by the Check Engine lamp and is read out, repair is possible with standard workshop tools.

Note

Information on Special Tool test adapter 9543.

The test adapter has to be used when testing electrical wires, e.g. at the control unit plug. The test adapter protects the plug terminals and facilitates locating the individual pins.

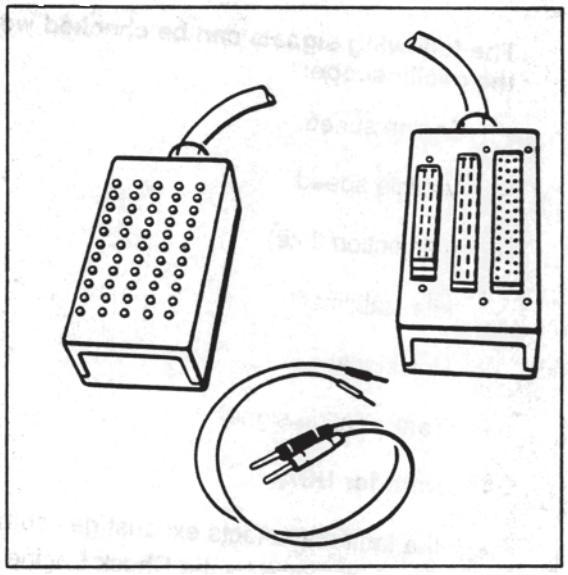

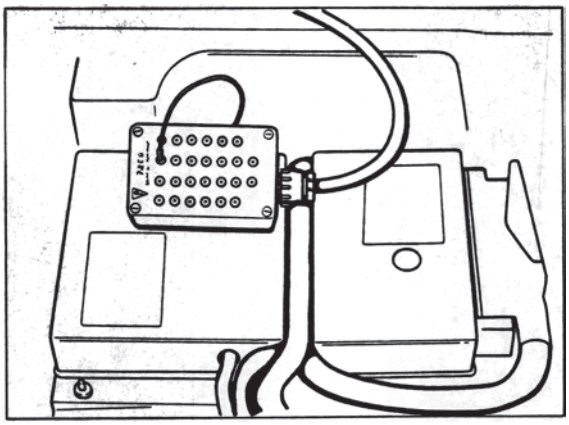

Diagnosable DME Control Unit

A self-diagnosis feature with fault memory is incorporated into the DME control unit to permit certain faults to be detected and stored.

The DME control unit has a permanent positive connection to prevent deletion of detected and stored faults when the iginition is switched off. Detected faults remain stored in the fault memory for at least 50 engine starts.

Caution:
If the DME control unit plug or the battery is disconnected, the fault memory will be cleared.

Tester Connections:
The diagnostics socket is located on the right-hand side of the passenger footwell.

Note:
The fault path and fault code displayed on the System Tester 9288 will be complemented by the relevant test point in the troubleshooting plan.

The Eprom module version 5.0 may be used to select the following menus that may in turn be used to select additional submenus. These are displayed by the System Tester in text form.

Selectable menus:

- Fault memory

  Drive links

  Input signals

  Knock registration

  Actual values

  Drive link active

This DME diagnosis/troubleshooting plan is based on the contents of the fault memory. Paths not covered by self-diagnosis are diagnosed by conventional means.

Troubleshooting requires that the person performing the tests

is familiar with the location of components, function and technical relationships of the systems beeing tested

is able to read and evaluate Porsche wiring diagrams

knows the functions of circuits and relays

is capable of using testers such as oscilloscope, voltmeter, ohmmeter and ammeter, as well as of evaluating the test results.

The fault text displayed indicates the fault path, i.e. the fault may be present anywhere, from the control unit, across all connectors up to the component itself.
Before reading the fault memory, do not try to locate faults with engine running by disconnecting plugs etc. since this may be detected and stored as a fault in the fault memory.

Note for System Tester 9288
If the tester display shows **... not present**, this could mean

- Fault did not exist at time of testing

  In case of a loose contact, an additional + symbol is displayed.
  Example: **... not present +**
  Remedy: Visual inspection of path

  Conditions under which the fault is tested do not correspond to the conditions under which the fault occurred.
  Remedy: Conform with conditions displayed on the tester.

If the **Signal unplausible** message is displayed on the tester, this could mean

- The signal of the monitored component is not within the tolerance range.

Explanations for the counter shown on the tester display
When the fault is detected for the first time, the counter is always set to 50.
If a lower number is displayed, determine the difference between 50 and the value shown. This value represents the number determined from the combination of starting process, meeting the test conditions and non-presence of the fault. When the number 0 is reached, the fault path is deleted in the control unit.
Should the fault status change from not present to present at a number below 50, the counter is reset to 50. If a number above 50 is displayed, the difference indicates the number of loose contacts that have occurred. Even at a value above 50, the counter counts down to zero when the above combination of conditions is met.

Arrangement of components in the vehicle

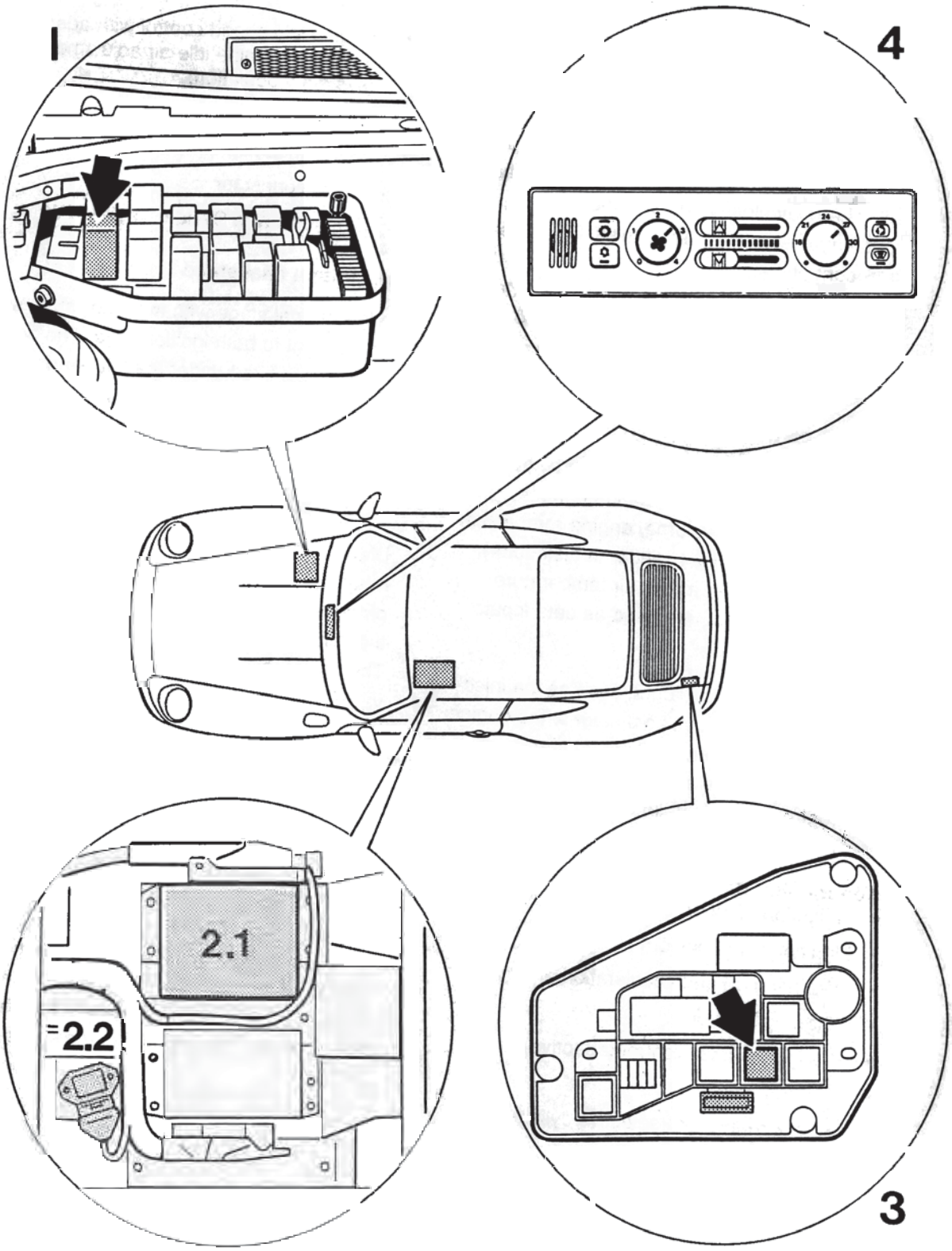

Function of components

1. DME relay

When the ignition is switched on, a positive voltage is supplied to pin 27 (term. 15) of the DME control unit across the airbag and alarm control unit.
At the same time, the DME relay terminal 85 is grounded via terminal 36 of the DME control unit. The relay closes and a further positive input signal is supplied to terminal 37 of the DME control unit.
Once the ignition has been switched off, the DME unit is shut down across terminal 36 with a delay of approx. 2-3 seconds to allow internal tests to be carried out in the control unit.

2.1 DME control unit

The engine functions are controlled by the DME control unit. Other measured input values, such as air volume, engine rpm, actual camshaft position (Hall sender in distributor), engine temperature, intake air temperature and throttle position, are used as data inputs for the control unit.

The main system actuators, such as the injection valves, the ignition final stages, the engine idle speed positioner, the tank vent and the resonance flap, are all controlled by the unit. The control unit is installed under the left hand seat in the car.

Connotation DME control unit:

- Injection (sequential)
- Ignition (twin ignition)
- Warming up and acceleration enrichment
- Start up control
- Oxygen sensor control (adaptive)
- Overrun shutoff
- Knock regulation (selective cylinder control, adaptive)
- Anti-bucking feature
- Torque reduction during Tiptronic gearshift accomplished by ignition retard
- Engine idle speed adjustment for Tiptronic vehicles
- Engine idle speed control with adaptive, automatic engine idle air adjustment (system modulation)
- Carbon canister purge
- Resonance flap control
- 55-pin connector
- Diagnosis with System Tester 9288

2.2 Ignition final stage

A double final stage with two transistors supplies current to both ignition coils. The double final stage is fitted under the left hand seat, mounted on a bracket next to the DME control unit.

3. Relay for auxiliary air pump

The auxiliary air injection is controlled by the DME control unit that connects the appropriate relay on the relay board on the left hand side of the engine compartment to ground when the correct engine temperature is reached.
The relay then closes and connects a solenoid valve and the secondary air pump to positive. Voltage is now supplied to the electric motor in the pump and the motor starts running.

4. Heating control unit

When the heating regulator is set to maximum heating or when a high heating output is required, a signal is sent from the heating control unit to terminal 41 of the DME control unit. When this signal is present, the "overrun shutoff" feature is no longer valid and, hence, cooling of the heat exchanger at low outside temperatures and longer thrust periods is avoided.

Arrangement of components on the engine

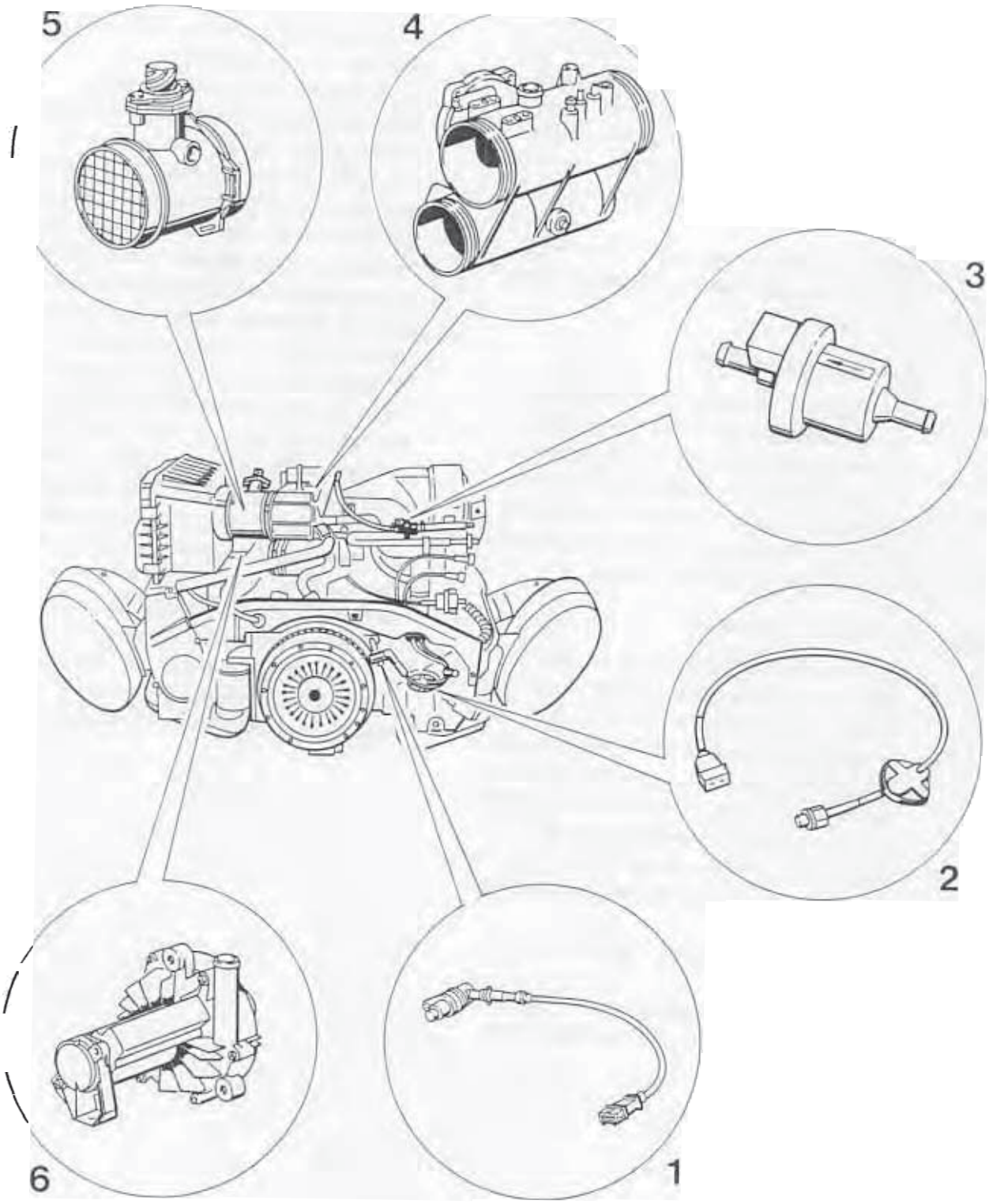

Function of components

1. Speed and reference mark sender

The DME is combined with an inductive sender for engine speed and reference mark detection. For this purpose, a toothed ring gear is machined onto the flywheel. This ring has a total of 60 teeth. Two of these teeth are replaced by cutouts to generate the reference mark signal. The reference signal is set at 84° BTDC.
The air gap between the sender and the flywheel ring gear is adjustable and must be 1.0 ± 0.2 mm.

2. Engine temperature

The engine temperature sensor is screwed into the cylinder head of the third cylinder. It has two electrical connections, i.e. corrosion on the temperature sensor threads has no detrimental effect on the resistance characteristics and, hence, on the mixture composition (potential temperature sensor).

3. Tank venting valve

A solenoid valve is installed in the line between the carbon canister and the air intake system. The direction of flow of the solenoid is indicated by an arrow on the plastic housing. The valve is frequency-controlled by the map just above the area for engine idle and when the cylinder head temperature is > 95° C.
This ensures that the correct amount of purge air is mixed in accordance with the intake air volume.
In a no-voltage state the solenoid valve is closed.
The valve can be checked with the System Tester using the “drive link test” menu item.

4. Resonance flap

The DME control unit activates a vacuum-controlled diaphragm valve which either opens or closes the resonance flap.
The resonance flap is closed between 3,000 rpm and 5,500 rpm and at a throttle opening angle of > 60°.
Due to the ignition sequence, the intake system is alternatively supplied by both tanks. Due to the firing order, air is drawn in an alternating manner from both intake system tanks. If resonances occur, the intake frequency of one row of cylinders matches the natural frequency of the pressure vibrations in the respective tank. The natural frequency is determined by the geometry of the intake pipes, the resonance pipe and the tanks. A crucial factor, however, is the total length of the pipe from the actual intake cylinder to the next cylinder being supplied, the distribution into intake and the resonance pipe lengths as well as the depth of the tank in the direction of flow. In the no-current state, the resonance flap is open. As soon as the ignition is switched on, however, it is triggered and closed. If the DME control unit detects that the engine is being started, the resonance flap is opened again.

5. Hot-film mass air flow sensor

Detection of the air drawn into the intake is performed by a hot-film mass air flow sensor.

The air mass is required for the following DME control unit functions:

Injection

Ignition

Oxygen sensor control

Venting of the carbon canister

Knock regulation

Plausibility test

The electronic housing (the complete measuring element) and the measuring channel are fitted into the housing of the mass air flow sensor with two screws. An additional seal is used to seal the measuring element against the sensor housing.

On the inlet and outlet sides of the mass air flow sensor a protective screen is fitted to smooth out the turbulences in the air and therefore to ensure an even air flow around the hot film. Next to the connecting plug, an arrow is imprinted in the housing of the mass air flow sensor to indicate the direction of air flow.

Note

The measuring element in the mass air flow sensor housing must never be removed since the components are calibrated during manufacture of the unit.

6. Auxiliary air pump

In order to ensure faster heating up of the catalytic converters of vehicles supplied to the USA and Canada, and to improve emissions when starting the engine at temperatures between 15 °C and 70 °C (engine temperature), auxiliary air is injected downstream of the exhaust valve for 1 minute after starting. The auxiliary air injection is controlled by the DME control unit that connects the appropriate relay on the relay board on the left hand side of the engine compartment to ground when the correct engine temperature is reached. The relay then closes and connects a solenoid valve and the secondary air pump to positive. Voltage is now supplied to the electric motor in the pump and the motor starts running. The auxiliary air pump is installed underneath the hot film mass air flow sensor.

Arrangement of components on the engine

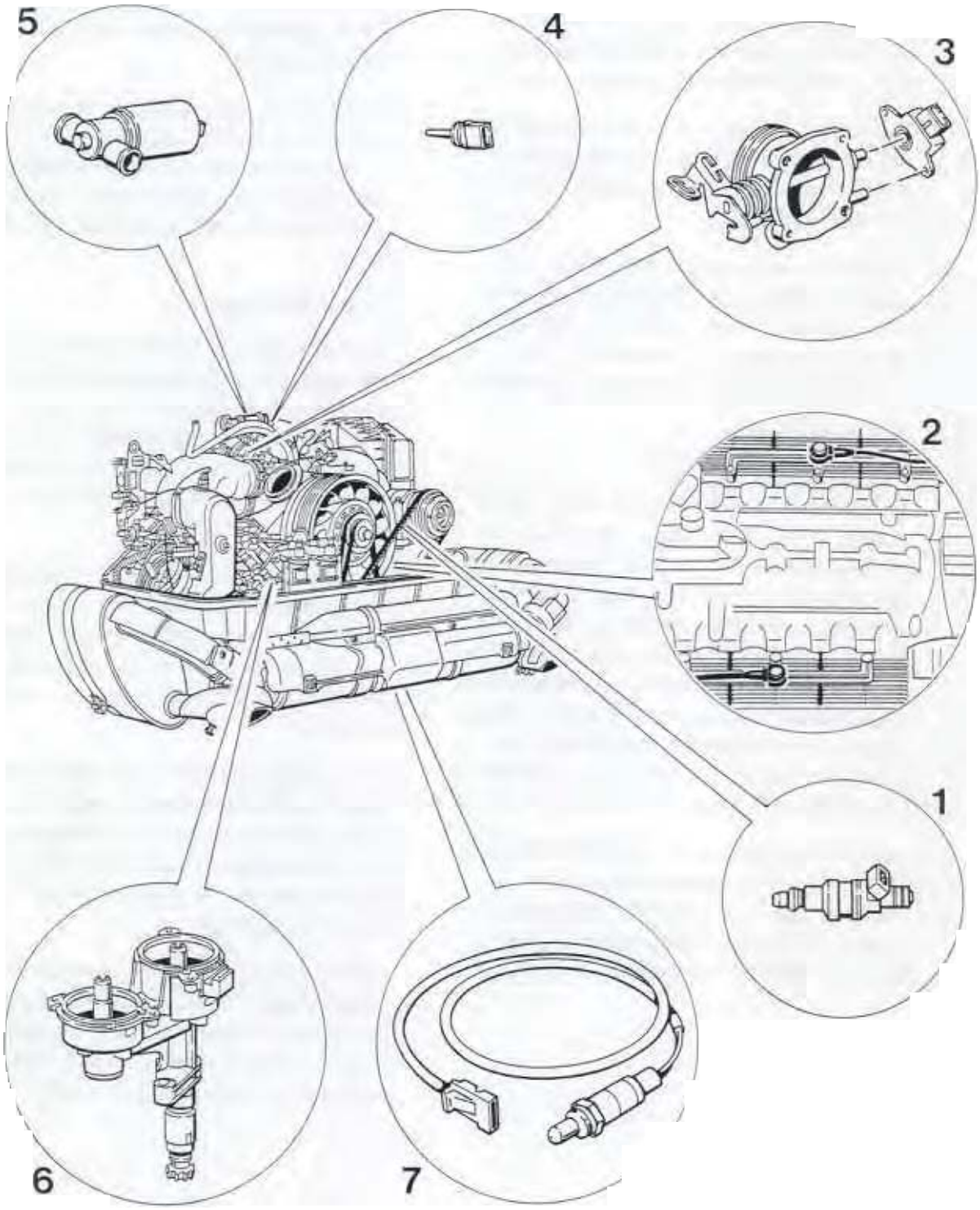

Function of components

1. Injection valves

The orifice cross-section of the injection valves is the same as on the 200 kW (272 HP) engine. The brass coil in the injection valve has a internal resistance of approx. 16Ω.

Due to the sequential fuel injection system, the electrical conneting wires must never be interchanged. The wires are therefore marked for easy identification.

Sequential fuel injection means that every cylinder is individually supplied with the entire calculated fuel quantity once per working cycle according to the ignition sequence. This produces a very homogeneous air-fuel mixture.

2. Knock sensors

The engine is equipped with two knock bridges with a knock sensor screwed into each of these knock bridges. The knock bridges connect the individual cylinders no. 1 to 3 and 4 to 6. The knock detection cirucit is matched to the bridges which is why no other components may be fitted to the bridges (interference). The correct tightening torque and the correct assembly sequence must be observed. Inadvertent mixup of the connectors of the knock sensors on the wire harness end cannot occur. The plug connector is of green color.

If a knocking combustion is detected, the ignition timing for the respective cylinder is retarded by 3°. If the knocking combustion continues, each knock detected retards the ignition in 3° stages up to a maximum of 9°.

If no knocking combustion is detected anymore, the ignition timing is advanced to the optimum value or the programmed ignition timing angle again in small steps according to the time elapsed.

To allow the sensor signals of both knock sensors to be correlated according to the firing order, a Hall sender is fitted into the double ignition distributor to enable the DME control unit to recognize the ignition point of cylinder no. 1.

Adaptive function

In order to perform adaptive knock regulation, the electronic ignition map is subdivided up into 8 engine speed and 4 load ranges. If a knock occurs, the ignition angle is retarded by 3° for the respective cylinder, and is then retuned to the optimized ignition angle in small steps dependent on time.

If, however, the corresponding load/engine speed range is exceeded (e.g. during acceleration) while ignition timing is retarded, the last ignition timing angle set (learnt) when the load/engine speed range was left is now adapted.

In the next load/engine speed range, the new (optimized) ignition angle stored in the control unit is immediately set. In this manner, longer and unnecessary retarding of the ignition is avoided and the dynamic behavior of the engine is improved.

If the engine now returns to the load/engine speed range with the adapted (learnt) ignition angle, the reduced value deviating from the optimum ignition angle is set first. This helps to reduce the total number of knocks.

3. Throttle potentiometer

A throttle potentiometer on the shaft is used to determine the angular position of the throttle shaft. The O position (engine idle position) of the potentiometer is determined in an adaptive process by the DME control unit.

If the battery has been disconnected or the control unit has been separated from the system, the engine must be restarted with the throttle fully closed.

A self-adaptive unit always selects the smallest opening angle of the throttle as the engine idle position. If the throttle moves to "open", the engine idle settings are switched off by the control unit as soon as an opening angle of 1° is reached. When a throttle opening angle of approx. 66° is reached, the control unit actuates the full-load feature.

Using the "Actual values" menu on the system tester, the current opening angle of the throttle can be read off in degrees. In this manner the accelerator cable setting can be checked. When the throttle is in the zero position, the throttle angle display must be 0°. With the accelerator pedal fully depressed, i.e. with the throttle fully open, the throttle angle display must read 84° ± 3° .

4. Intake temperature

To reduce the knock tendency of the engine at high intake temperatures, the 911 Carrera is fitted with a temperature sensor (NTC) in the rubber shroud between the mass air flow sensor and the throttle body. The signal of this sensor is processed by the DME control unit.

Modification of the timing angle towards "retarding" the timing angle is a continuous process and starts at an intake temperature of 25 °C.

The current value transmitted by the temperature sensor may be retrieved in degrees Centigrade with System Tester 9288 in the "Actual values" menu item.

5. Idle speed positioner

The positioner is supplied with two clocked electrical input signals from the DME control unit, one for the opening coil and the other for the closing coil. This creates opposed torsional forces on the armature. Due to the inertia of the armature, the positioner adjusts itself to a particular angle that corresponds to the pulse/duty factor of the signal received.

By modifying the input signals, e.g. when the engine speed changes, the pulse/duty factor of the signal supplied to the positioner changes as well. The programmed nominal rpm is compared with the actual rev. speed in the control unit. The air flow is then modified by the positioner until the nominal rpm and the actual rpm are identical.

6. Double distributor with Hall sender

The 911 Carrera engine is fitted with a twin ignition system, i.e. there are two spark plugs per combustion chamber to ignite the air-fuel mixture. This shortens the spark travel in the cylinder and reduces combustion time while producing a faster pressure increase. In addition, a more stable combustion is achieved thanks to the second spark source, i.e. the differences between one working stroke and another are reduced.

In summary, twin ignition offers the following advantages:

Higher power output

Lower fuel consumption

Improved engine idle

Improved throttle response with a cold engine with less enrichment requirements

Reduced emissions

Hall sender

Hall sender

The twin ignition distributor includes a Hall sender that is required to acknowledge the firing TDC position of cylinder no. 1. The Hall signal is required by the DME control unit to correlate the knock sensor signals or to control the sequential fuel injection.

7. Oxygen sensor

The 911 Carrera is fitted with the plunge-proof oxygen sensor LSH 25. The oxygen sensor is potential-free and is therefore fitted with a new 4-pin plug connector with separately insulated wires.

The oxygen sensor is heated by the DME control unit. Positive supply to the oxygen sensor occurs across the fuel pump relay inside the DME relay (as soon as the engine is started). The ground connection is made via the DME control unit. If the engine has already reached the operating temperature and is then driven at heavy loads and high engine speed, no additional heating of the oxygen sensor is required. In this operating state, the DME therefore cuts off the supplementary sensor heating.

The oxygen sensor is monitored by the DME control unit. The sensor voltage may additionally be read off using the System Tester and the "Actual values" menu item. If problems occur at the oxygen sensor, start troubleshooting by checking operation of the sensor heater. A voltage of approx. 12 V should be present at the sensor plug when the engine is at idle.

Fault memory

Possible fault texts

```
Power supply
too high

XXXXXXXXXXXXXXXXXXXXXXXX
```

```
Power supply
too low

XXXXXXXXXXXXXXXXXXXXXXXX
```

```
ECTS 2

Short to ground
XXXXXXXXXXXXXXXXXXXXXXXX
```

```
ECTS 2

Opn. circ./short to +
Signal unplausible
XXXXXXXXXXXXXXXXXXXXXXXX
```

```
Throttle
potentiometer
Signal unplausible
XXXXXXXXXXXXXXXXXXXXXXXX
```

```
Throttle
potentiometer
Short to ground
XXXXXXXXXXXXXXXXXXXXXXXX
```

```
Speed signal
Engine
Signal unplausible
XXXXXXXXXXXXXXXXXXXXXXXX
```

```
Speed signal
mph
Signal unplausible
XXXXXXXXXXXXXXXXXXXXXXXX
```

```
Hot film MAF

Short to +
XXXXXXXXXXXXXXXXXXXXXXXX
```

```
Hot film MAF

Opn. circ./sh. to gr.
XXXXXXXXXXXXXXXXXXXXXXXX
```

```
HO2S
Signal unplausible

XXXXXXXXXXXXXXXXXXXXXXXX
```

```
Closed loop sensor

lean
XXXXXXXXXXXXXXXXXXXXXXXX
```

```
Closed loop sensor

rich
XXXXXXXXXXXXXXXXXXXXXXXX
```

Fault memory

Possible fault texts

```
HO2S
Short to ground

XXXXXXXXXXXXXXXXXXXXXXXX
```

```
HO2S
Short to +

XXXXXXXXXXXXXXXXXXXXXXXX
```

```
HO2S
Open circuit

XXXXXXXXXXXXXXXXXXXXXXXX
```

```
Intake air temp.
sensor
Short to ground
XXXXXXXXXXXXXXXXXXXXXXXX
```

```
Intake air temp.
sensor
Opn. circ./short to +
XXXXXXXXXXXXXXXXXXXXXXXX
```

```
Change of ign. timing
Short to ground

XXXXXXXXXXXXXXXXXXXXXXXX
```

```
IACV
opening winding
Short to +
XXXXXXXXXXXXXXXXXXXXXXXX
```

```
IACV
opening winding
Opn. circ./sh. to gr.
XXXXXXXXXXXXXXXXXXXXXXXX
```

```
IACV
closing winding
short to +
XXXXXXXXXXXXXXXXXXXXXXXX
```

```
IACV
closing winding
opn. circ./sh. to gr.
XXXXXXXXXXXXXXXXXXXXXXXX
```

```
Knock sensor 1
Signal unplausible

XXXXXXXXXXXXXXXXXXXXXXXX
```

```
Knock sensor 2
Signal unplausible

XXXXXXXXXXXXXXXXXXXXXXXX
```

```
Control unit faulty
```

Fault memory

Possible fault texts

```
Hall signal
opn. circ./short to +

XXXXXXXXXXXXXXXXXXXXXXXX
```

```
Hall signal
short to ground

XXXXXXXXXXXXXXXXXXXXXXXX
```

```
Idle
CO potentiometer
short to ground
XXXXXXXXXXXXXXXXXXXXXXXX
```

```
Idle
CO potentiometer
opn. circ./short to +
XXXXXXXXXXXXXXXXXXXXXXXX
```

```
Control unit
faulty

XXXXXXXXXXXXXXXXXXXXXXXX
```

```
Fuel pump relay

short to +
XXXXXXXXXXXXXXXXXXXXXXXX
```

```
EVAP valve
short to +

XXXXXXXXXXXXXXXXXXXXXXXX
```

```
EVAP valve
opn. circ./sh. to gr.

XXXXXXXXXXXXXXXXXXXXXXXX
```

```
Warning light
Check Engine
short to +
XXXXXXXXXXXXXXXXXXXXXXXX
```

```
Injector valve
cylinder 1
short to +
XXXXXXXXXXXXXXXXXXXXXXXX
```

```
Injector valve
cylinder 1
opn. circ./sh. to gr.
XXXXXXXXXXXXXXXXXXXXXXXX
```

```
Injector valve
cylinder 6
short to +
XXXXXXXXXXXXXXXXXXXXXXXX
```

```
Injector valve
cylinder 6
opn. circ./sh. to gr.
XXXXXXXXXXXXXXXXXXXXXXXX
```

```
Injector valve
cylinder 2
short to +
XXXXXXXXXXXXXXXXXXXXXXXX
```

Fault memory

Possible fault texts

```
Injector valve
cylinder 2
opn. circ./sh. to gr.
XXXXXXXXXXXXXXXXXXX
```

```
Injector valve
cylinder 4
short to +
XXXXXXXXXXXXXXXXXXX
```

```
Injector valve
cylinder 4
opn. circ./sh. to gr.
XXXXXXXXXXXXXXXXXXX
```

```
Injector valve
cylinder 3
short to +
XXXXXXXXXXXXXXXXXXX
```

```
Injector valve
cylinder 3
opn. circ./sh. to gr.
XXXXXXXXXXXXXXXXXXX
```

```
Injector valve
cylinder 5
short to +
XXXXXXXXXXXXXXXXXXX
```

```
Injector valve
cylinder 5
opn. circ./sh. to gr.
XXXXXXXXXXXXXXXXXXX
```

```
Final stages
group 1
Signal unplausible
XXXXXXXXXXXXXXXXXXXX
```

```
Final stages
group 2
Signal unplausible
XXXXXXXXXXXXXXXXXXX
```

```
Final stages
group 3
Signal unplausible
XXXXXXXXXXXXXXXXXXX
```

```
AIR pump
relay
short to +
XXXXXXXXXXXXXXXXXXX
```

Drive links

```
Drive links
1 = Inj. valve cyl. 1
2 = Inj. valve cyl. 2
3 = Inj. valve cyl. 3 >
```

```
< Drive links
1 = Inj. valve cyl. 4
2 = Inj. valve cyl. 5
3 = Inj. valve cyl. 6 >
```

```
< Drive links
1 = IACV
2 = EVAP
2 = Resonance flap
```

Actuators active

ROW coding

```
Actuator active
1 = Ign. circ. 1 off
2 = Ign. circ. 2 off
3 = Inj. off
```

USA coding

```
Actuator active
1 = Ign. circ. 1 off
2 = Ign. circ. 2 off
3 = Inj. off   >
```

```
< Actuator active
1 = AIR pump
```

Target values

```
Actual values
1 = Voltage
2 = ECTS
3 = IATS   >
```

```
< Actual values
1 = Version coding
2 = Rpm
3 = Ignition timing   >
```

```
< Actual values
1 = HO2S voltage
2 = Load signal
3 = IACV   >
```

```
< Actual values
1 = Air flow sensor
2 = Speed
3 = Throttle plate   >
```

```
< Actual values
1 = Injection time
2 = Reference data
```

Input signals

```
Input signals
1 = Idle detection
2 = Full load detection
3 = ACS switch   >
```

```
< Input signals
1 = Signal heating
2 = Reference mark
3 = TR            >
```

```
< Input signals
1 = Ign. timing change
```

Test point	Fault code	Display (fault text)	Page
		Power supply	24 - 31
2	14	Engine temperature sensor 2	24 - 32
3	15/16	Throttle potentiometer	24 - 33
4	18	Rpm signal	24 - 33
5	19	Speed signal <- Speedometer	24 - 35
6	21	Hot-wire mass air flow sensor	24 - 36
7	22	Oxygen sensor	24 - 37
8	23	Oxygen regulation / stop	24 - 39
	24	Oxygen sensor / short to + / short to ground	24 - 39
9	25	Intake air temperature sensor	24 - 39
10	26	Ignition timing change	24 - 40
11 - 12	27/28	IACV opening winding / IACV closing winding	24 - 40
13	31	Knock sensor 1	24 - 42
14	32	Knock sensor 2	24 - 42
15	33	Control unit faulty	24 - 43
16	34	Hall signal	24 - 43
17	36	Idle CO potentiometer	24 - 43
18	41	Control unit faulty	24 - 43
19	42	Fuel pump relay (DME relay)	24 - 44
20	43	Tank ventilation valve	24 - 44
21	45	Warning lamp Check Engine	24 - 45
22 - 27	51 - 56	Injector valves	24 - 46
28	67 - 69	Ignition final stages	24 - 47
29	44	Auxiliary air pump relay	24 - 51
30		Checking fuel pressure	24 - 53
		Check intake system for freedom from leaks	24 - 54
		Check-Engine lamp	24 - 55

Control unit - terminal configuration

55 Diagnosis K wire
54 Characteristic map switch
53 Throttle potentiometer
52 Throttle position to transmission control unit
51 Transmission input
50 Knocking yes/no
49 Speed/reference mark sender +
48 Speed/reference mark sender –
47 Intake air temperature
46 not used
45 ECTS II
44 Tiptronic coding
43 not used
42 Selector lever switch
41 Heating control unit
40 AC compressor coupling
39 not used
38 not used
37 DME relay 87
36 Ground, DME relay 85
35 Injector valve cylinder 2
34 Injector valve cylinder 4
33 Tank vent
32 Auxiliary air pump (USA)
31 Final stage ignition circuit 2
30 Ground, knock sensors
29 Knock sensor 2
28 Oxygen sensor / CO potentiometer

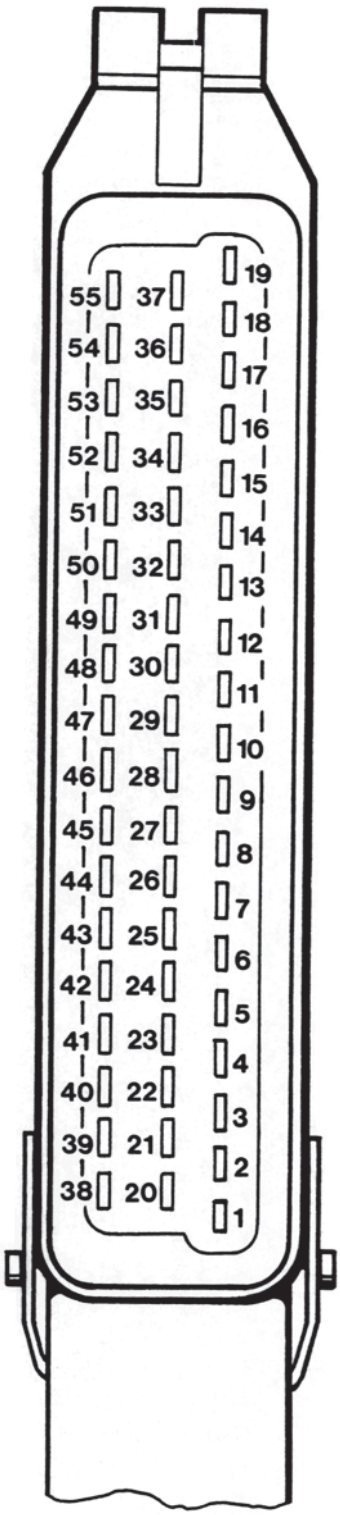

27 Terminal 15
26 Ground, mass air flow sensor
25 Final stage ignition circuit 1
24 Ground, remaining final stages
23 Injector valve cylinder 5
22 Intake manifold flap closed
21 Check Engine monitor (USA)
20 Oxygen sensor heating
19 Ground, electronics, all shields
18 Battery +
17 Injector valve cylinder 1
16 Injector valve cylinder 6
15 not used
14 Ground, throttle potentiometer / NTCs
13 Diagnosis L wire
12 Positive supply throttle potentiometer /Hall sender
11 Knock sensor 1
10 Ground, oxygen sensor
9 Vehicle speed
8 Hall sender signal
7 Mass air flow sensor signal
6 Rev. counter
5 Injector valve cylinder 3
4 Intake manifold flap open
3 Ground, DME relay 85 b
2 not used
1 Resonance flap

Engine in perfect running condition
Battery charged
Starter motor cranks the engine

Terms in bold letters =
Display Fault Memory / Fault Path

Test point	1	2	3	4	5	6	7	8	9	10	11	12	13
Plug, control Unit	24 → 18 24 → 27	45 → 14		49 → 48		7 → 26							
Test equipment	V	Ω	V	≡	≡	V		V	Ω		V≡	V≡	
Fault Code 1		14	15	18	19	21	22	23 24	25	26	27	28	31
	Supply voltage	**Engine temperature sensor 2**	**Throttle potentiometer**	**Rpm signal**	**Speed signal <- Speedometer**	**Hot Film Mass Air flow sensor**	**Oxygen sensor (Signal)**	**Oxygen regulation/Oxygen sensor**	**Intake Temperature Sensor**	**Ignition timing change**	**Opening winding of idle stabilizer**	**Closing winding of idle stabilizer**	**Knock sensor 1**
Engine will not start	x	x		x									
Engine hard to start		x		x		x					x	x	
Erratic idling		x	x			x					x	x	
Poor pick-up		x	x	x		x	x	x	x				x
Misfiring	x			x		x							
High fuel consumption		x	x			x	x	x					x
Poor energie power		x		x		x	x	x	x				x
Engine hesitation	x	x		x		x	x	x					
Poor hot starting											x	x	
Diagnosis not practicable	x												

											Opening winding of idle stabilizer			
	x						x	x		12	**Closing winding of idle stabilizer**	28	V≅	
			x	x		x				13	**Knock sensor 1**	31		
			x	x		x				14	**Knock sensor 2**	32		
			x	x		x				15	**Control unit faulty**	33		
			x	x		x				16	**Hall signal**	34	≅	
										17	**Idle CO potentiometer**	36		
x								x	x	18	**Control unit faulty**	41		
									x	19	**Fuel pump relay (DME-relay)**	42	V	36-24
	x	x				x	x	x		20	**Tank ventilation relay**	43	V ≅	
										21	**Check Engine warning lamp**	45		
	x	x		x	x	x	x	x		22	**Injection valve cylinder 1**	51	V Ω	≅
	x	x		x	x	x	x	x		23	**Injection valve cylinder 6**	52	V Ω	≅
	x	x		x	x	x	x	x		24	**Injection valve cylinder 2**	53	V Ω	
	x	x		x	x	x	x	x		25	**Injection valve cylinder 4**	54	V Ω	≅
	x	x		x	x	x	x	x		26	**Injection valve cylinder 3**	55	V Ω	≅
	x	x		x	x	x	x	x		27	**Injection valve cylinder 5**	56	V Ω	
		x	x		x		x	x	x	28	**Ground and plug connections**	67 69		
										29	Air Pump	44	V	
										30	Fuel pressure			
x										31	Leads K + L see Self-diagnosis, page 03-3	V ≅		

V = Voltmeter Ω = Ohmmeter ≅ = Oscilloscope

Fault, Fault Code	Possible Causes, Elimination, Remarks

Test Point 1a

Power supply for DME controll unit (V)

a) Permanent positive (term. 30) If there is no B+ at term. 30 the fault memory is cleared

Test procedure:

Connect a voltmeter to terminal 24 (-) and terminal 18 (+) of the control unit plug with the help of test leads.

Display: Battery voltage

No display: Check current flow and ground paths in accordance with wiring diagram.

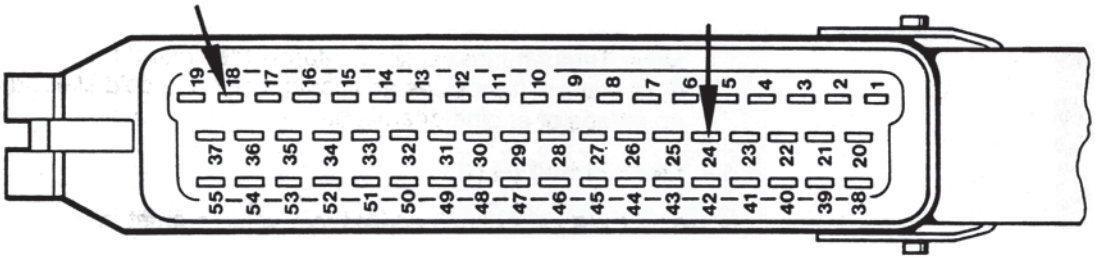

Test point 1b

Power supply of DME control unit (V) too high/too low

Fault code 1_11

b) Power supply via terminal 15

Connect a voltmeter to terminal 24 (-) and terminal 27 (+) of the control unit plug with the help of test leads. Turn on ignition.

Display: Battery voltage

No display: Check current flow according to wiring diagram

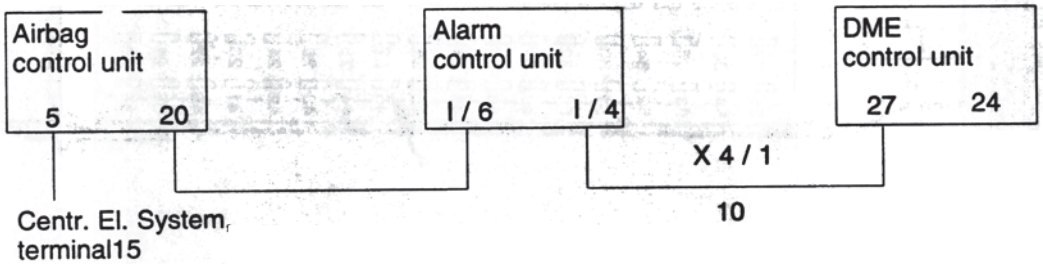

Fault, Fault Code	Possible Causes, Elimination, Remarks

Test point 2

Engine temp. sensor
(ECTS II/Ω)
Fault code 1_14

Using System Tester 9288, the engine temperature can be read off directly under menu item "Actual values".

If no plausible display:

Connect ohmmeter to terminal 45 and terminal 14 of the disconnected DME control unit plug with the help of test leads.

Display at:	0 °C	=	4.4 - 6.8 kΩ
	15 - 30 °C	=	1.4 - 3.6 kΩ
	40 °C	=	1 - 1.3 kΩ
	80 °C	=	250 - 390 Ω
	100 °C	=	160 - 210 Ω

If the above values ar not obtained, check directly at engine temperature sensor.

Note: Temperature sensor 2 informs the control unit of the engine temperature. It provides additional fuel in the cold starting and warm-up stages of engine operation.

Open circuit (∞ Ω):

The DME control unit adjusts to a value pre-set in the control unit that approximately corresponds to that of the engine at operating temperature. When the engine is warm, enrichment by the faulty temperature sensor 2 does not occur (emergency running program). This results in starting problems when the engine is cold (no cold start enrichment).

Short circuit to ground:

When engine is cold: No engine pickup, too lean, engine stops.
No effect if engine is at operating temperature.

Replacement value is applicable to both types of fault!

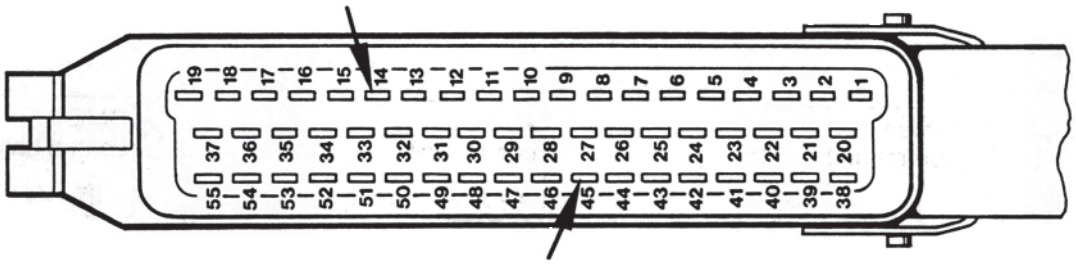

Fault, Fault Code	Possible Causes, Elimination, Remarks

Test point 3

Throttle potentiometer
Fault code 1_15
1_16

Using System Tester 9288, the throttle angle may be read directly in the **Actual values** menu item.
If no pausible display is obtained, check power supply.
Connect test lead VW 1501 between throttle potentiometer and disconnected plug.
Connect voltmeter between lead No. 1 and No. 2.
Ignition on = display: approx. 5 V (Power supply of throttle potentiometer)
No display: Check according to wiring diagram
Display approx. 0.5 Volt.
Connect voltmeter to lead No. 2 and No. 3.
Operate throttle. Voltage should now increase to approx. 4.3 Volt.

Test point 4

Rpm signal
Fault code 1_18

Run test using an oscilloscope. Connect and adjust shop oscilloscope according to manufacturer's instructions.

Connect oscilloscope test lead with terminal 49 and terminal 48 of the disconnected DME control unit plug.

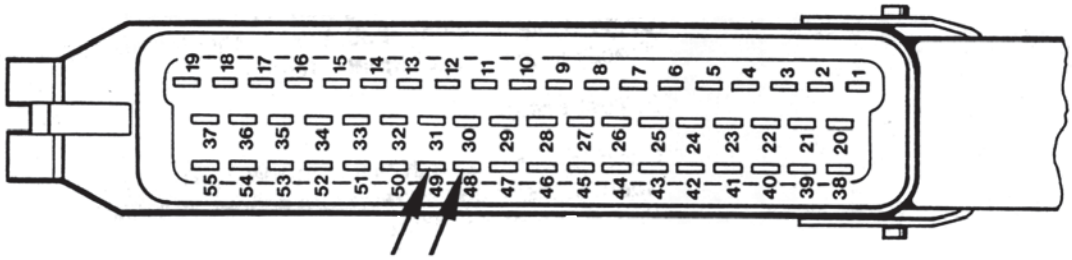

Fault, Fault Code	Possible Causes, Elimination, Remarks

Start engine. Sinewave fluctuations of 3 V min. must now be displayed. An intermittently higher amplitude indicates the reference mark signal.

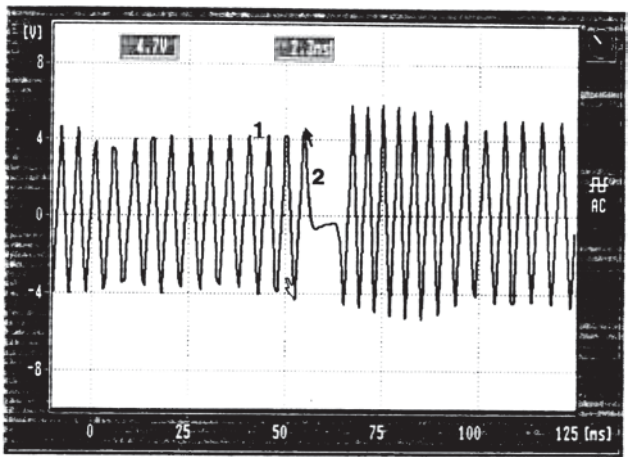

1 – Rpm signal
2 – Reference mark signal

If the voltage signal is too low (< 3V), the gap between sensor and ring gear may be adjusted incorrectly.

Sensor gap: Between ring gear and sensor 1.0 ± 0.2 mm.
Using System Tester 9288, the reference mark signal may be read directly in the **Input signals** menu item.

2. Test option

Check rpm signal with test lead VW 1501.
Connect test lead between rpm sender and disconnected control unit plug. Connect oscilloscope to test lead.
On vehicles with immobilizer, pull start relay (R 61) off the central electrical system and bridge plug-in contacts 30 and 87 (identifications 3 and 5 on central electrical system) with fuse-protected shop-made cable.

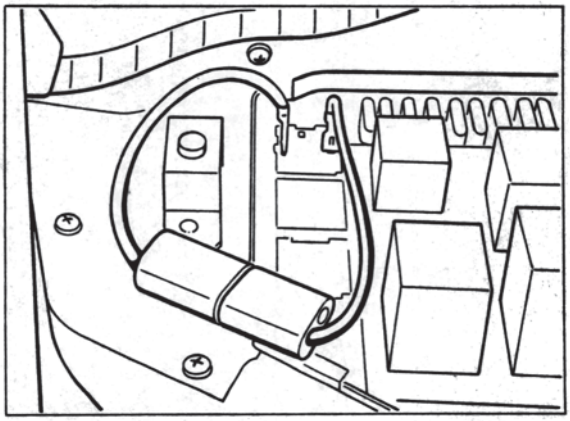

Fault, Fault Code	Possible Causes, Elimination, Remarks
	Start engine Sinewave fluctuations of 3 V min. must now be displayed. An intermittently higher amplitude indicates the reference mark signal.

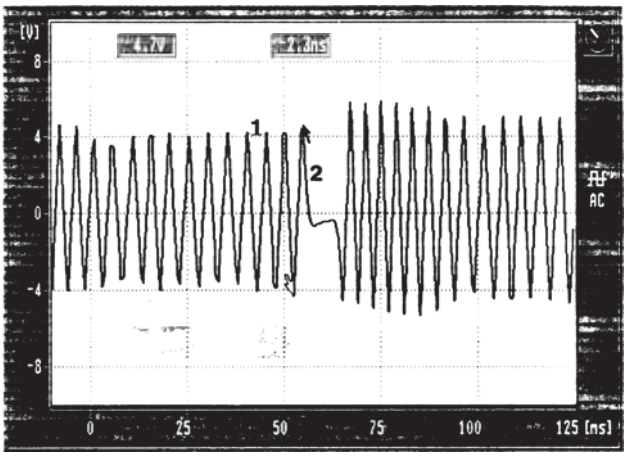

Test point 5

Speed signal/
Speedometer
Fault code 1_ 19

Using System Tester 9288, the speed signal may be read directly in the **Actual values menu item**. As an alternative, check with an oscilloscope.
To do so, connect oscilloscope to terminal 9 and terminal 24 of the control unit plug. Turn left front wheel manually.
The following signal must now be displayed.

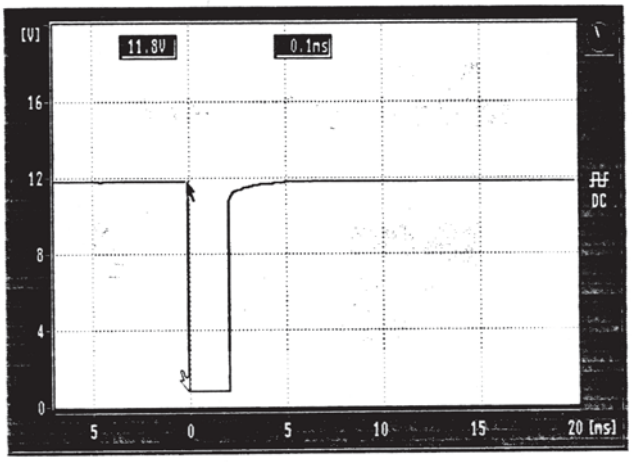

Fault, Fault Code	Possible Causes, Elimination, Remarks

Test point 6

Hot wire mass air flow sensor (V/Ω)
Fault code 1_21

Voltage supply (V)

Turn plug at hot wire mass air flow sensor anti-clockwise and disconnect. Connect voltmeter to terminals 1 and 3.

Bridge DME relay

Pull DME relay (R 53) off the central electrical system and bridge plug-in contacts 30 and 87 b (identifications 3 and 7 on central electrical system) with fuse-protected shop-made cable. The fuel pump should now start operating.

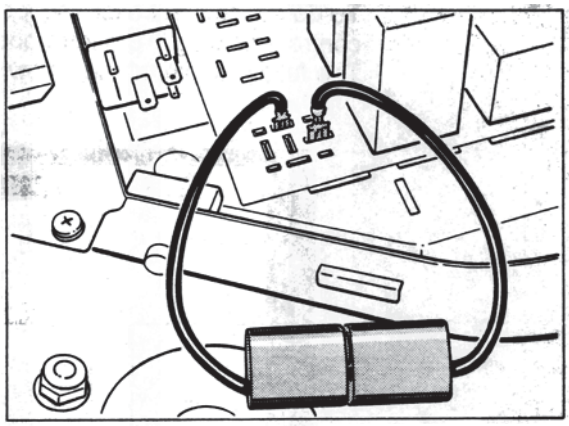

Ignition on:
Display: Voltage approx. 10.8 Volt

No display: check in accordance with wiring diagramm

Reconnect plug.

Fault, Fault Code	Possible Causes, Elimination, Remarks

Checking the hot wire signal with System Tester 9288

The mass air flow sensor signal may be tested directly in the **Actual values** menu item using System Tester 9288.

To check the signal, remove upper air cleaner section and start engine.

Display: approx. 1.0 Volt

Blow against hot wire.
This must cause the System Tester display to change.

Checking the hot wire signal (V)

Connect plug to mass air flow sensor.
Pull off DME plug.
Bridge DME relay.
Connect DME plug terminal 36 to ground (e.g. door stop).
Connect voltmeter to DME plug terminal 7 and 26 (ground).

Display: 160 mV

Blow against hot wire in mass air flow sensor and observe voltmeter.
A **voltage change** must occur.

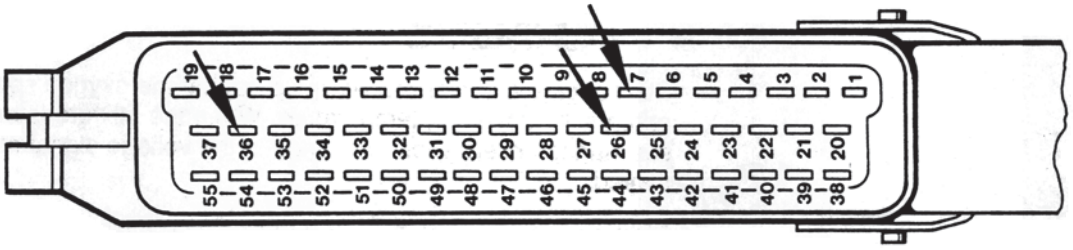

Test point 7

Oxygen sensor (V)
(Sensor signal)
Fault code 1 – 22

Checking the sensor signal

Using the System Tester 9288, the oxygen sensor signal may be read directly under the **Actual values** menu item.
Diagnosis can only be carried out if an engine temperatur of 70 °C has been reached for more than 1 minute.

Fault, Fault Code	Possible Causes, Elimination, Remarks

If not:

Disconnect oxygen sensor plug.

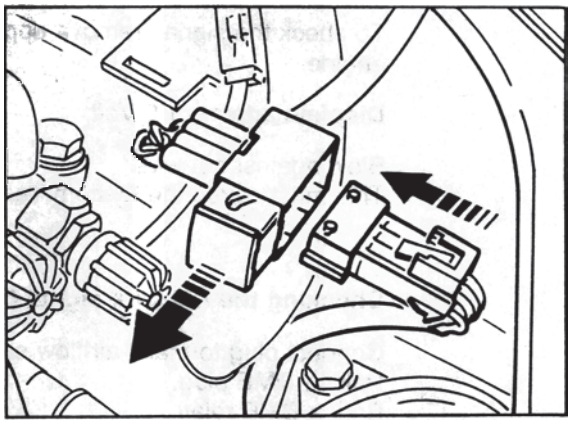

Connect digital voltmeter with terminals 3 and 4 at the sensor end.

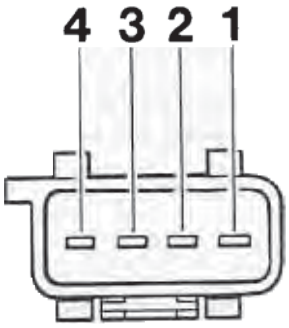

Start engine and allow to warm up so that the oxygen sensor reaches its operating temperature. When the mixture is enriched, e.g. during acceleration, a change in the voltage signal must be displayed.

Display: approx. 150 mV - 900 mV (acc. to mixture composition)

Oxygen sensor heating test

In case of delayed regulation response, check the oxygen sensor heating. To do so, connect voltmeter to terminals 1 (+) and 2 of the disconnected sensor plug on the control unit end with the engine running. On-board voltage must be present.

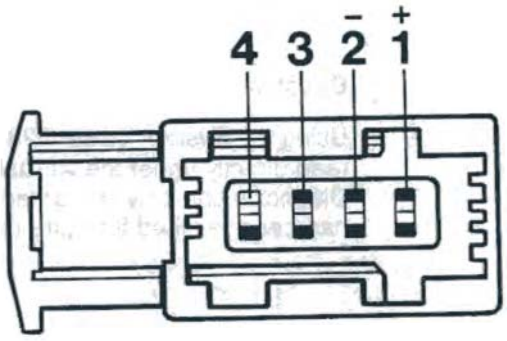

Fault, Fault Code	Possible Causes, Elimination, Remarks

Test point 8

Oxygen regulation stop
Fault code 1_23

The oxygen regulator cannot operate within its control range if extreme problems of mixture preparation occur, e.g. due to an excessively lean setting because of unmetered air, or due to an excessively rich setting because of a faulty injector valve. The oxygen regulator then moves up to the stop position.

Oxygen regulation **too rich**:
- Check intake system for leaks

Oxygen regulation **too lean**:
- Check fuel pressure
- Check injector valves for leaks

Oxygen sensor
Short to +/short to ground
Fault code 1_24

If the control unit detects an oxygen sensor voltage signal of more than 1.4 V or less than 0.1 V, the control unit switches to operation without oxygen sensor. (Short to ground or open circuit).

If regulation does not work and the sensor voltage is O.K., use System Tester 9288 to check the coding of the control unit before replacing it.

Test point 9

Intake air temperature sensor
Fault code 1_25

Using the System Tester 9288, the intake air temperature may be read directly under the **Actual values** menu item.

If no display or unplausible value:

Connect terminals 47 and 14 of disconnected DME control unit plug to ohmmeter.

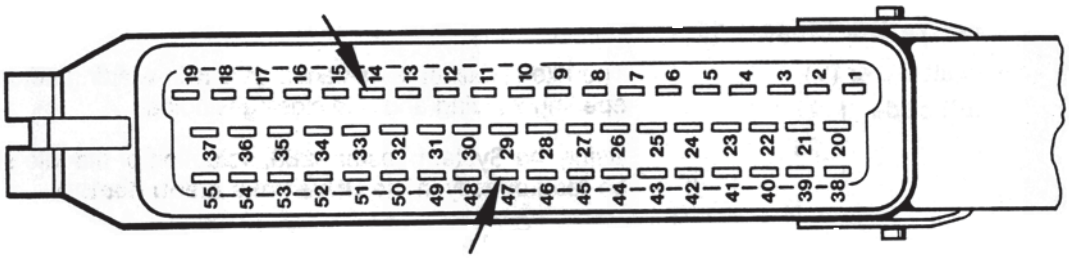

Display at:	0 °C =	4.4 - 6.8 kΩ
	15 - 30 °C =	1.4 - 3.6 kΩ
	40 °C =	1 - 1.3 kΩ

Fault, Fault Code	Possible Causes, Elimination, Remarks

Test point 10

Ignition timing change
Fault code 1 – 26

Using the System Tester 9288, the ignition timing change signal may be read directly in the **Input signals** menu item.

On Tiptronic vehicles, ignition is retarded when a gear change is made.

When the ignition timing change fault message occurs, check wiring continuity between DME plug and Tiptronic connector.

DME control unit plug: terminal 51

Tiptronic control unit plug: terminal 32

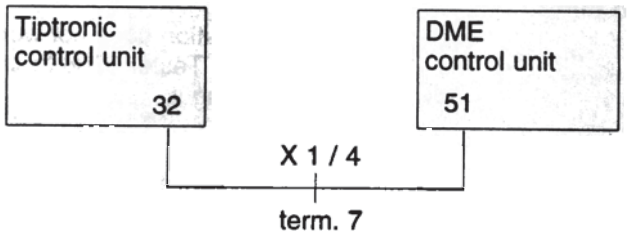

Caution, observe connection between plugs!

This fault causes the Tiptronic to operate in emergency mode. For the test to be valid, a test drive is required since the signal is only displayed for a very short time.

Test point 11 and 12

Idle stabilizer (V)
Fault code 1_27
1_28

The idle stabilizer is designed as a twin-winding actuator with one opening winding and one closing winding.

Using the System Tester 9288, actuation of the idle stabilizer may be read directly in the **Drive links menu item**.

If no audible pulse is present, check the following:

Voltage supply

Connect voltmeter with disconnected plug of idle stabilizer terminal 2 and engine ground. Ignition on.

Display: Battery voltage

Fault, Fault Code	Possible Causes, Elimination, Remarks

Configuration of terminals

Terminal 1	Closing winding signal
Terminal 2	Battery voltage
Terminal 3	Opening winding signal

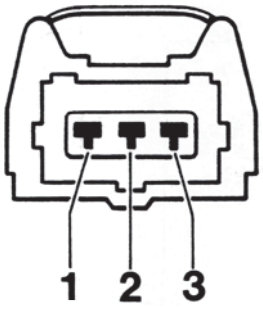

No display:

Check power supply in accordance with wiring diagram.

Check the control signal

Using the System Tester 9288, the idle stabilizer signal may be read directly in the **Actual values** menu item.

Operational check: Switch on loads in idle mode.
% display must change, idle speed remains constant.

If not:

Connect 3-pin adapter lead VW 1501 between idle stabilizer and plug port.

Connect oscilloscope to the adapter lead terminal 1 (closing winding) as well as terminal 3 (opening winding).

Make sure the wiring connectors are not shorted to vehicle ground – **to avoid short circuits.**

Fault, Fault Code	Possible Causes, Elimination, Remarks
	With the engine running, the following display must appear:

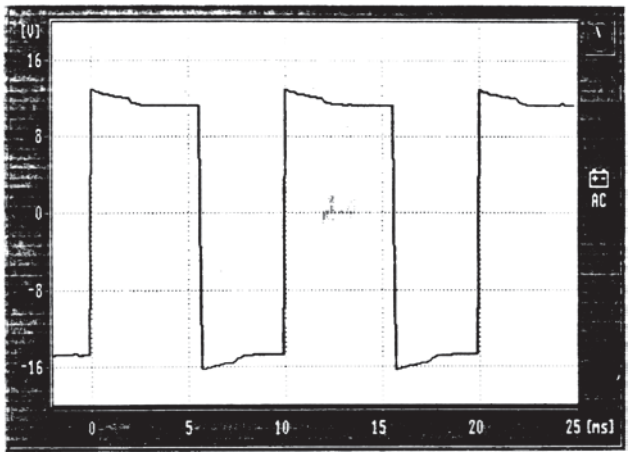

1. Signal (terminal 1, opening closing signal)
2. Signal (terminal 3, opening winding signal)

If no audible pulse is detected even though voltage is present and a signal is applied, replace the idle stabilizer.

Test point 13

Knock sensor 1

Fault code 1_31

Mounting of knock sensor (observe torque and type of screw).

Check wiring harness and plug connection in accordance with wiring diagramm.

Reconnecting the plugs helps to eliminate contact resistances.

Replace knock sensor.

If the knock sensor is faulty, ignition timing is retarded by 6° on the crankshaft at a certain engine load.

Test point 14

Knock sensor II

Fault code 1_32

Mounting of knock sensor (observe torque and type of screw).

Check wiring harness and plug connection in accordance with wiring diagramm.

Reconnecting the plugs helps to eliminate contact resistances.

Replace knock sensor.

If the knock sensor is faulty, ignition timing is retarded by 6° on the crankshaft.

Fault, Fault Code	Possible Causes, Elimination, Remarks
Test point 15 Control unit faulty (Knock computer) **Fault code 1_33**	Ignition timing is retarded by 6° on the crankshaft for all cylinders from a certain engine load if this fault occurs. Replace control unit.
Test point 16 Hall signal **Fault code 1_34**	The hall sender is connected to the control unit for voltage supply (approx. 5 V) and ground connection. The signal is fed to the control unit via the 0 line. **In case of error display:** Check voltage supply, ground connection and signal line in accordance with the wiring diagram.

Hall sender plug terminals		Control unit plug terminals
	→	19
2	→	8
3	→	12

Test point 17 Idle CO potentiometer **Fault code 1_36**	On vehicles without catalytic converter that show fault code 36, start by testing the control unit coding with System Tester 9288, **Actual values menu item.** If the coding is O.K., check power supply for CO potentiometer and potentiometer signal in accordance with the wiring diagram.
Test point 18 Control unit faulty **Fault code 1_41**	If this fault is detected by the control unit, maximum engine speed is limited to 6,000 rpm 6 minutes after starting the engine. This is done to protect the engine.

Fault, Fault Code	Possible Causes, Elimination, Remarks

Test point 19

Fuel pump relay
(DME relay) (V)
Fault code 1_42

Start engine.

The fuel pump must operate during engine starting.

If not:

Switch off ignition. Disconnect control unit plug. Use a test lead to connect terminal 36 and terminal 24 of the control unit plug. Using an additional test lead, connect terminal 3 of DME plug to ground (e.g. door stop). The pump must run.

If not:

Check in accordance with wiring diagram

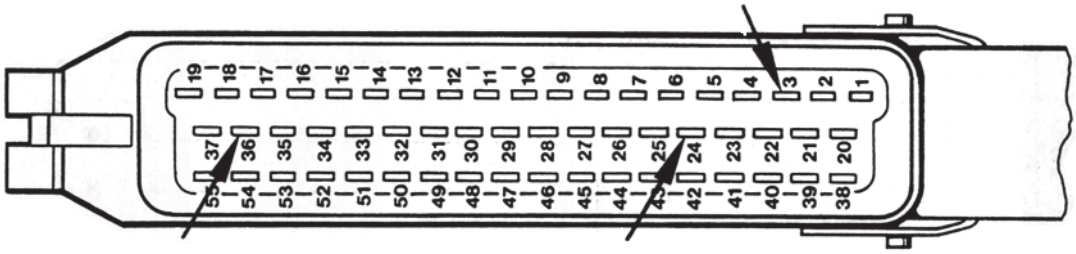

Test point 20

Tank ventilation valve (V)
Fault code 1_43

When the engine operates at operating temperature, the tank ventilation valve is opened for a longer or shorter period as a function of the load. The opening period is determined by a ground pulse from the control unit.

Activation test

To activate the tank ventilation valve directly, System Tester 9288 may be used, selecting the **Drive links menu item**.

If there is no audible pulse from the tank venting valve, check voltage supply at the terminal of the tank ventilation valve plug and body ground according to the wiring diagramm.

Ignition on.

Display: Battery voltage

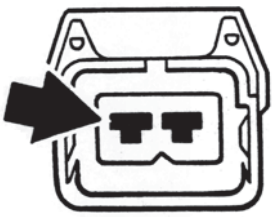

Fault, Fault Code	Possible Causes, Elimination, Remarks

Control signal test

Connect DME test lead (Bosch No. 1 684 463 093) between tank ventilation valve and plug connection. Connect and adjust engine tester according to manufacturer's instructions.

The tank ventilation valve is not activated permanently.

Testing must be performed within 7 minutes after starting the engine at operating temperature. Then interrupt activation of ventilation valve for approx. 75 seconds, continue afterwards.

Start engine and accelerate. With the engine at operating temperature, the following display must be visible on the tester:

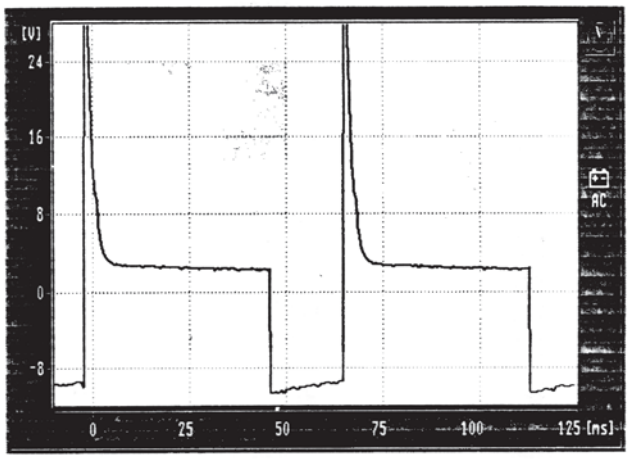

The signal becomes wider als the air throughput increases.

If there is no signal, check path in accordance with wiring diagram.

Test point 21

Warning lamp
Check Engine
Fault code 1_45

A ground signal is fed from the control unit - terminal 21 - to the "Check Engine lamp", causing this lamp to come on when an emission control component fails.

If the "Check Engine" warning lamp fails, this fault is stored in the fault memory.

Fault, Fault Code	Possible Causes, Elimination, Remarks
	Check by supplying ground to disconnected DME control unit plug terminal 21 and switching on ignition. The Check Engine lamp must now come on.

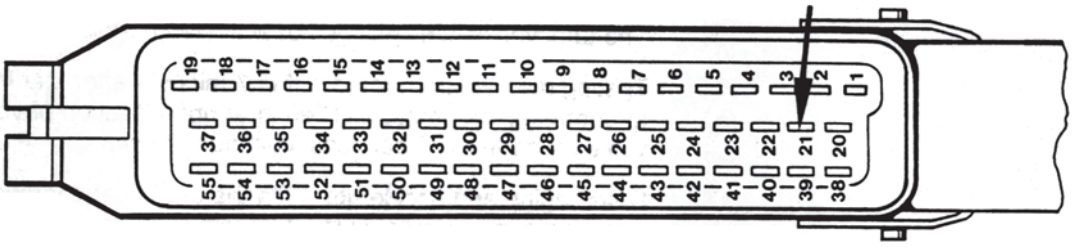

To replace a faulty display lamp, always use the specified bulb.

Reading errors using the Check Engine warning lamp is covered on page 24-55.

Test point 22 - 27

Injector valves (V/Ω)

Fault code 1_51
1_52
1_53
1_54
1_55
1_56

Using the System Tester 9288, the injector valves may be checked directly in the **Drive links menu item** or the **Actuator active** menu item.

Selective injection allows each injector valve to be actuated individually. In case of the Drive links test point, a rather weak switching noise of the injector valves is audible.
In case of the Actuator active menu item, each individual injector valve may be isolated with the engine running.

Power supply

Disconnect valve plug, connect voltmeter to the injector valve plug terminal - refer to drawing - and ground (engine).
Ingition on.

Display: Battery voltage

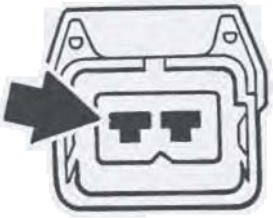

If no battery voltage is displayed, check according to wiring diagram.

Fault, Fault Code	Possible Causes, Elimination, Remarks

Checking coil resistance of injector valves

Disconnect valve plug. Check coil resistance at injector valve teminal contacts with an ohmmeter.

Test value: approx. 16 Ω

Injection output stage

Adjust oscilloscope according to manufacturer's instructions. Connect a Bosch test lead (1 684 463 093) between injector valve and plug. Connect oscilloscope according to manufacturer's instructions with the test lead.

Caution: Make sure the tester leads are not grounded in any way.

Start engine. If the injection output stage operates correctly or if the tester connections are correct, respectively, the following signal must be displayed:

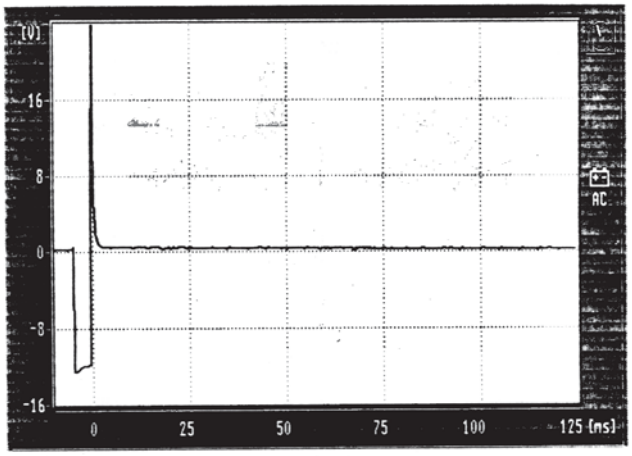

ti-signal

Test point 28

Ignition final stages

Fault code 1– 67
1–68
1–69

The ignition circuits may be checked using the **Actuator active menu item** on the System Tester 9288 (with the engine running).

Check control signal for the ignition final stages.

Fault, Fault Code	Possible Causes, Elimination, Remarks

Ignition circuit I

Connect test lead plus of the oscilloscope to terminal 2 and test lead minus to terminal 4 (ground) of the disconnected final stage plug (ignition control unit).

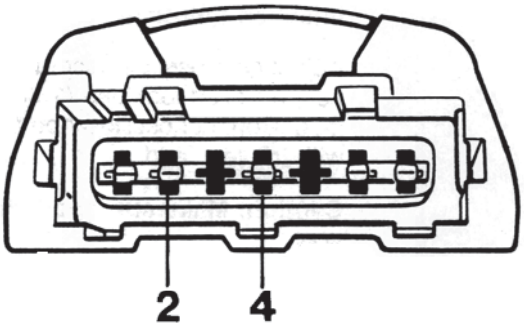

Operate starter.

The oscilloscope must display the activating signal of the DME control unit.

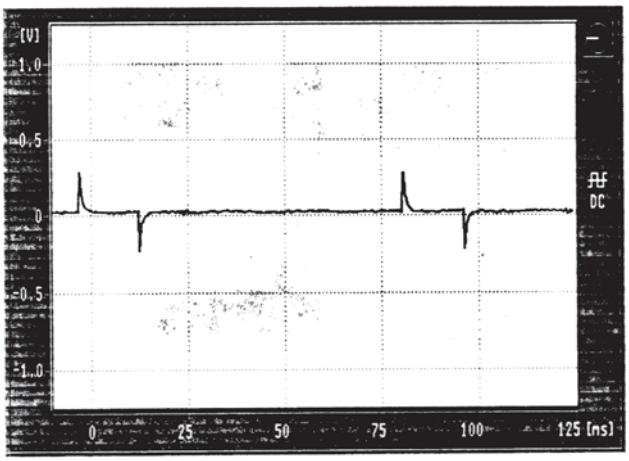

Fault, Fault Code	Possible Causes, Elimination, Remarks

Ignition circuit II

Connect test lead plus of the oscilloscope to terminal 7 and test lead minus to terminal 7 (ground) of the disconnected final stage plug (ignition control unit).

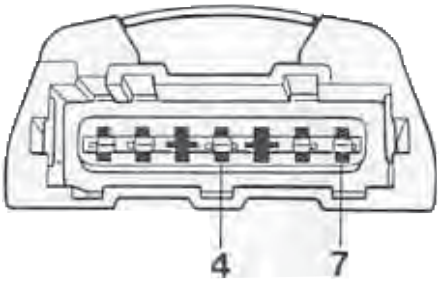

Operate starter

The activating signal must be displayed as for **ignition circuit 1**

Checking control signal for ignition coils

Ignition circuit I

Plug connected to ignition control unit. Push back rubber sleeve and connect test lead plus to terminal 1.

Ground test lead minus

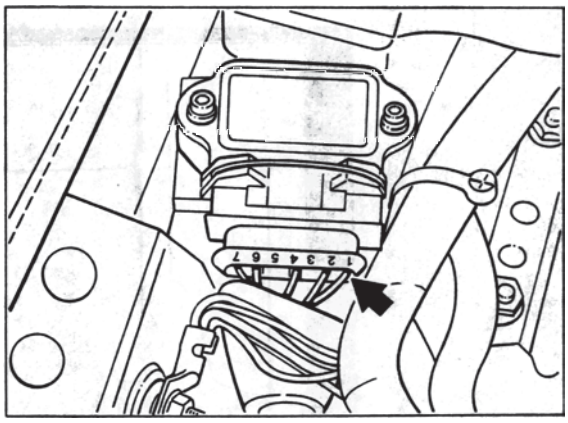

Start engine

Fault, Fault Code	Possible Causes, Elimination, Remarks
	Oscilloscope shows primary pattern of ignition coil (ignition circuit I)

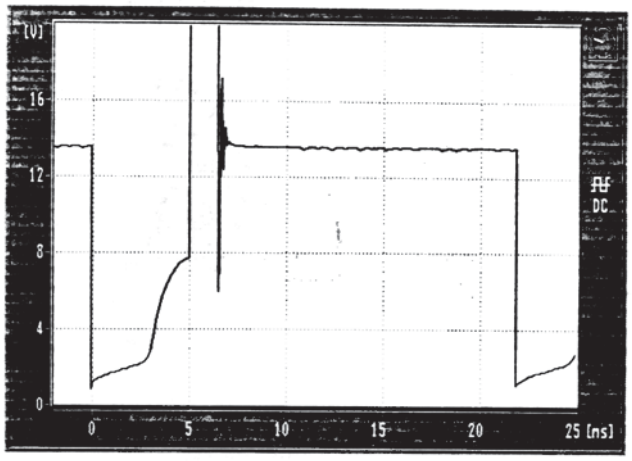

Ignition circuit II

Plug connected to ignition control unit. Push back rubber sleeve and connect test lead plus to terminal 7.

Ground test lead minus.

Start engine.

Oscilloscope shows primary pattern of ignition coil (ignition circuit II).

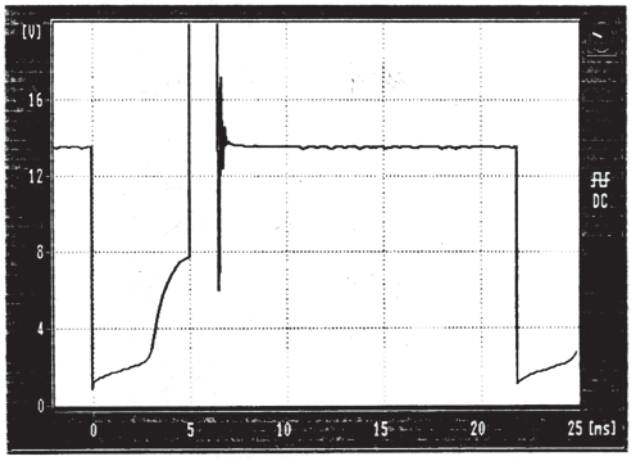

Fault, Fault Code	Possible Causes, Elimination, Remarks

Test point 29

Auxiliary air pump relay
Fehlercode 1 - 44

The auxiliary air pump may be tested using the **Actuator active menu item** on the System Tester 9288.

Conditions for testing

Cylinder head temperature > 80 °C (> 176 °F)

After selecting "Actuator active", the auxiliary air pump will be activated after a waiting period of approx. 10 seconds.

This will be indicated by the " * " symbol shown in the upper right-hand corner of the display.

Activation of the pump is limited to 20 seconds.

```
AIR pump              *
Control      U probe
1.10         0.01 V
Return:              N
```

When the pump is running, sensor voltage tends approaches 0 volts and oxygen sensor regulation approaches 1.20.

Activating the pump

If oxygen sensor regulation and sensor voltage do **not** change after the pump activating symbol has appeared on the display, check pump activation and the relay according to the wiring diagram.

Activating on-off valve

If the pump activating symbol is displayed, the pump is audibly running, but the oxygen sensor regulation does not approach 1.2 and the sensor voltage does not approach 0.1, the fault lies in the on-off valve area or its wiring.

20 02 01 Checking fuel pressure

1. Remove heater fan from left-hand rear engine compartment area.

2. Detach cap from fuel collection pipe test connector and take off cap.

3. Connect pressure gauge of pressure measuring device **P 378** or VW 1318 to connecting line **9559** and connect to test connector.

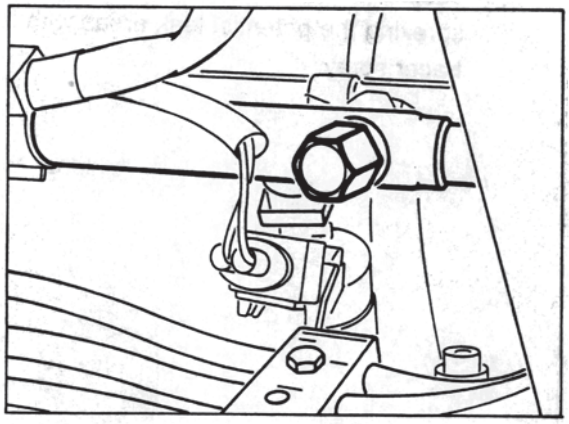

1743-20

4. Pull DME relay (R53) off the Central Electrical System and use a fuse-protected shop-made jump lead to connect pin 30 to pin 87 b (identifications 3 and 7 on Central Electrical System). The fuel pump should now operate.

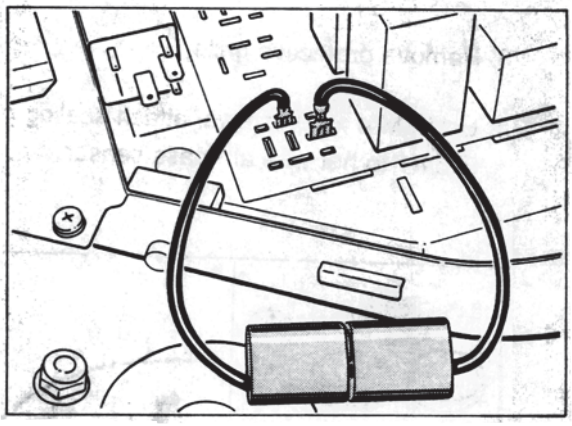

1728-20

4. Test specifications:

Engine switched off	**3.8 ± 0.2 bar**
Engine idling	**3.3 ± 0.2 bar**

Caution

The plastic cap at the test connector must always be replaced by a new brass cap (Part No. 993.110.218.01).

The seal in the brass cap **cannot** be replaced. The brass cap must therefore be used only **once**.

Tighten new brass cap to 2.5 + 0.5 Nm (1.8 + 0.4 ftlb).

Checking intake system for freedom from leaks

1. Remove complete air cleaner assembly.

2. Remove hot wire air mass sensor.

3. Remove protective grille

4. Using M 4 x 40 screws, attach sealing plate 9264/1 to hot wire air mass sensor.

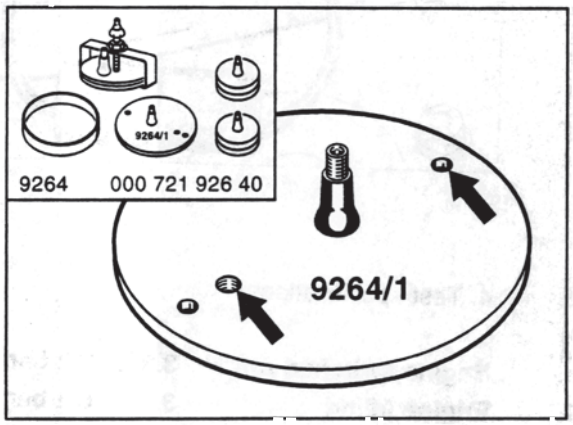

2030-20

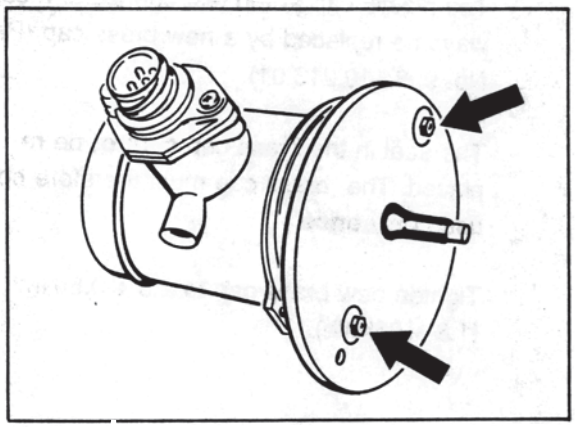

2031-20

Note

Before tightening the screw to the final torque setting, check positioning of hot wire air mass sensor on the sealing plate, i.e. no air gap must be visible anywhere when a visual check is made.

5. Build up a pressure of approx. 0.5 bar. After the pressure has been built up, air escaping from larger leaks is clearly audible. Smaller leaks may be located by spraying the potential leak areas with leak tracer spray.

Check-Engine Lamp

(Malfunction Indicator Light M.I.L.)

USA vehicles are fitted with a warning lamp that lights up if a component relevant to exhaust gas composition fails.

As a function check of the warning lamp, the lamp lights up when the ignition is switched on and goes out when the engine is running after it has been started without depressing the accelerator.

A flashing code of the warning lamp indicates the defective fault path.

To trigger the flashing code, fully depress the accelerator pedal for 3 seconds with the engine off and the ignition on until the Check-Engine lamp flashes. Then ease off the throttle.

If no fault is stored, i.e. no warning came from the warning lamp, a flashing code appears

15
no fault.

● = Lamp on O = Lamp off

If the warning lamp did indicate a warning, i.e. there is a fault, a flashing code appears, e.g.

1 1 2 4

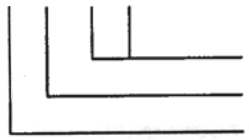

Fault code
Constant fault (2 with loose contact)
DME

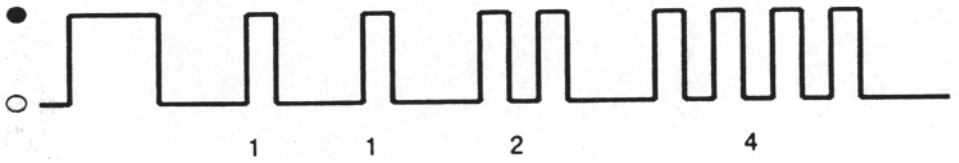

1124
Oxygen sensor

The flashing code is listed in the Diagnosis/Troubleshooting plan on page 24 - 29.
The fault can also be read directly using System Tester 9288. After the repair the fault memory must be erased using the **System Tester**.

If the fault memory is read via the Check-Engine lamp, repairs may be performed using conventional shop equipment.

37 01 Tiptronic Diagnosis / Troubleshooting

Diagnosis / Troubleshooting

Tiptronic

System G03

Contents

	Page
General Information	37 - 3
Menu (Overview of available menus)	37 - 4
Component layout	37 - 5
Functions of individual components	37 - 6
System description	37 - 9
Tools	37 - 17
Connector pin assignment (transmission control unit)	37 - 19
Fault memory (Overview of available displays)	37 - 21
Fault overview	37 - 23

General Information

A self-diagnosis feature with fault memory is built into the transmission control unit to allow specific faults within the electronic Tiptronic control to be detected and stored.

To prevent detected and stored faults from being erased when the ignition is switched off, a permanent positive voltage is present at the control unit.
Detected faults remain stored in the fault memory for at least 50 engine starts.

Caution!

If the connector is pulled off the transmission control unit or if the battery is disconnected, the fault memory is erased.

If terminal 15 becomes inoperative, the system enters the "emergency mode". The fault warning lamp does not light up in this case.

In "emergency mode" and if diagnosis wires are faulty, the diagnosis program cannot be entered (see page 03 - 3).

Menu

Overview of available menus

```
Menu
1 = Fault memory
2 = Drive links
3 = Input signals      >
```

```
<Menu
1 = Actual values
```

System Tester 9288 can be used to check and read out the following parameters:

Input signals
with "Input signals" menu

Kickdown
Downshift
Upshift
Manual program
Selector lever
Stop light

Actual values
with "Actual values" menu

Rpm
Speed 1
Speed 2
Injection time
Throttle
Temperature
Transverse acceleration
Gear
Voltage supply
Version coding

Drive links
with "Drive links" menu

Solenoid valve 1
Solenoid valve 2
Torque converter clutch
Gear indicator 1 - 4
Reverse relay
Ignition timing change

Component layout

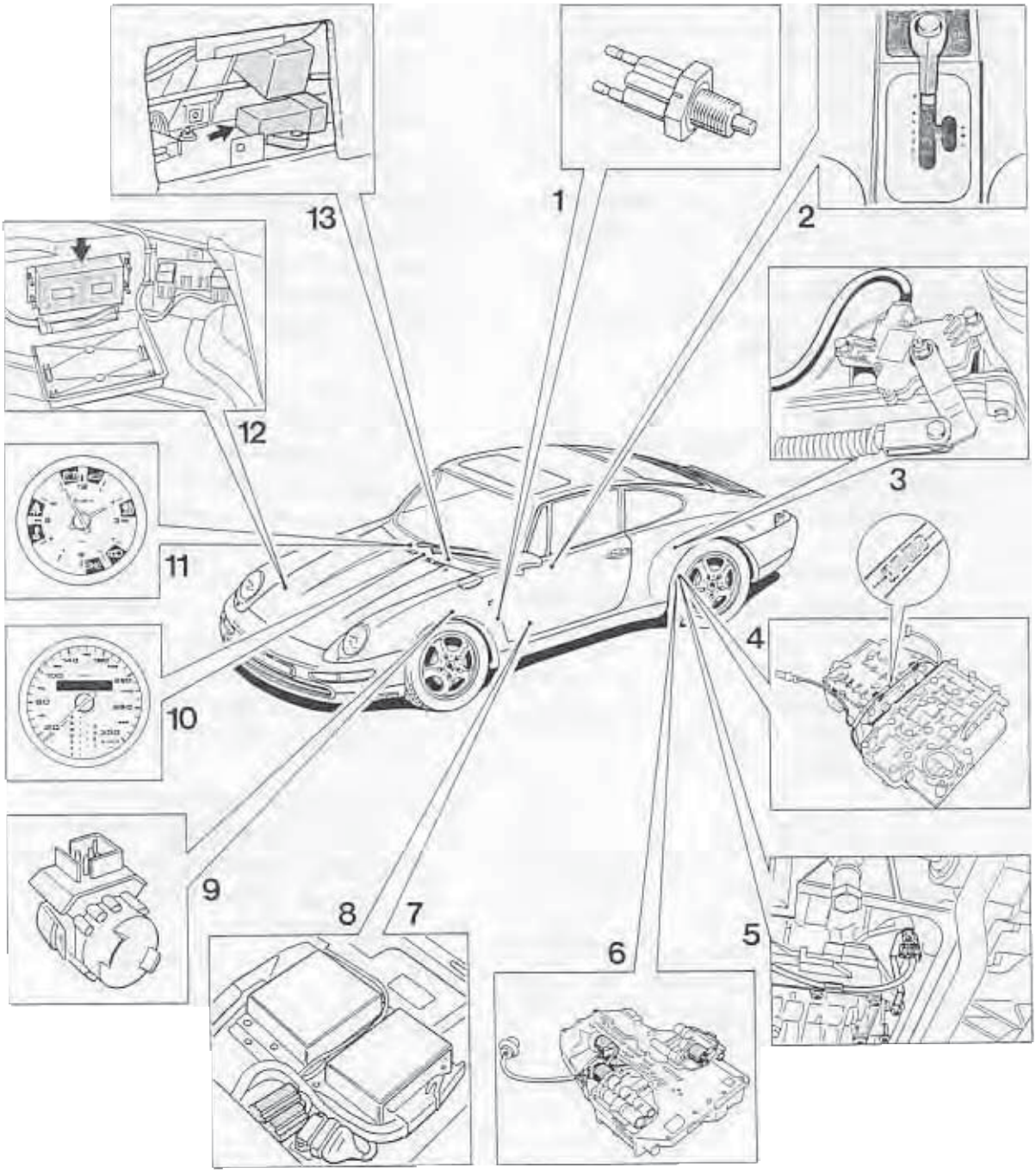

Functions of individual components

1. Stop light switch
Installation position: At brake pedal.
A stop light switch signal must be sent to the transmission control unit to start downshifts before entering a curve (refer to 1 h, page 37 - 13).

2. Selector lever
The selector lever transmits the selector lever position across a bowden cable to the transmission and to the position switch.

2a. Selector lever switch
It includes the manual, upshift, downshift and parking switches.

Manual switch
It connects the transmission control unit to ground in the manual gate in order to enable manual tip shifting.

Upshift switch
It connects the transmission control unit to ground to start an upshift.

Downshift switch
It connects the transmission control unit to ground to start a downshift.

Parking switch
In the P/N position, ground is connected to the P/N lock control unit (Shiftlock) and to the cruise control unit.
When the P/N control unit is triggered, the shiftlock function is activated; when the cruise control unit is triggered, the activated cruise control function is interrupted.

3. Position switch
Installation position: At transmission.
The position switch is operated directly by the selector lever across a bowden cable and transmits the selector lever position to the transmission control unit. It operates the reverse lights and is used to lock the starter when a drive position is engaged.
If this signal is faulty, the system enters the "emergency mode".

4. ATF temperature sender unit
Installation position: The sender is built into the transmission harness. If it is damaged, the entire wiring harness has to be replaced (refer to page 38 - 111).

The sender controls the modulating pressure of the transmission in accordance with the ATF temperature. This helps to provide comfortable shifting operations across the entire temperature range.
If the ATF temperature reaches excessive levels, the control unit selects a map with minimum power loss and closes the torque converter lockup clutch. Additionally, downshifts are made at higher engine speeds. This reduces slip inside the toruqe converter, allowing the ATF to cool down.

If the actual voltage excceds or remains below the specified signal voltage range, the sender is assumed to be faulty. A 60°C replacement value is then used for the shift operations.

5. Inductive rpm pickup

Installation position: In transmission.
The inductive pickup transmits the transmission output rpm required for speed-dependent shift point calculation and slip monitoring to the transmission control unit.
If the signal is faulty, the "emergency mode" is selected.

6. Solenoid valves (SV)

Installation position: At the slide box in the transmission.
The electronic transmission control unit controls operation of the automatic transmission across the solenoid valves. SV 1, 2 and 3 are on-off solenoids. SV 1 and 2 determine selection of the individual gears depending on how they are activated by the electronic control unit. SV 3 is used for the torque converter lockup clutch.
The SV (pressure controller) is a frequency valve used for pressure control. It controls the actuation pressure (modulation pressure) of the shifters in accordance with engine speed, engine torque and ATF temperature.

7. Transmission control unit

Installation position: Below left-hand seat.
The electronic transmission control unit is the information and command center of the entire system. It compares a multitude of information inputs (measurements) with stored driving and gearshift programs, selects the map that is suited best to the driving mode and sends commands to the transmission to execute or not to execute specific gearshifts.

8. DME control unit

Installation position: Below left-hand seat.
The DME control unit is fitted to the transmission control unit. It supplies the following input signals to the transmission control system:
Rpm signal
Fuel consumption signal
Throttle potentiometer signal.

If one of those signals is faulty, the "emergency mode" is selected.

Upon a command sent by the transmission control unit, it can also retard the ignition angle in the moment of shifting.

9. Kickdown switch

Installation position: Ahead of the accelerator.
The kickdown switch detects the accelerator being depressend beyond the full-throttle position. It then connects the transmission control unit to ground and the control unit shifts the shifting points for fast acceleration. Depending on the engine rpm, the transmission shifts down immediately and does not shift up until the maximum engine rpm is reached.
If this switch is defective, no kickdown is executed.

10. Selector lever position and gear indicator

The selector lever position and the selected gear are displayed on the speedometer.

11. Emergency mode warning lamp

The warning lamp in the clock lights when the ignition is switched on (lamp check) and goes dim when the engine is started. If this lamp comes on while the car is in motion, this is due to a system fault, causing the emergency mode to be selected. This warning lamp also indicates that the electro-hydraulic reverse lock is inoperative (refer to 3c, page 37-15).

12. ABS control unit

Installation position: In luggage compartment (right-hand wheel housing).
The ABS control unit is connected to the transmission control unit. It transmits the wheel speed of the right-hand front wheel (see 1d, page 37-13)

13. Transverse acceleration sensor

Installation position: Below center console
If the transverse acceleration limits are exceeded during cornering, the sensor transmits a signal to the transmission control unit. No shifts are then executed, even if the accelerator is depressed (refer to 1c, page 37-12).
If the signal is faulty, "no upshift suppression" is performed.

System description

The Tiptronic transmission is a load-shift planetary transmission that can be shifted either automatically or manually (via a rocker switch).
The transmission is controlled by an electronic transmission control system that selects automatically among five different shift maps (SC1 = map for very comfortable and economical driving, to SC5 = map for very sporting driving).

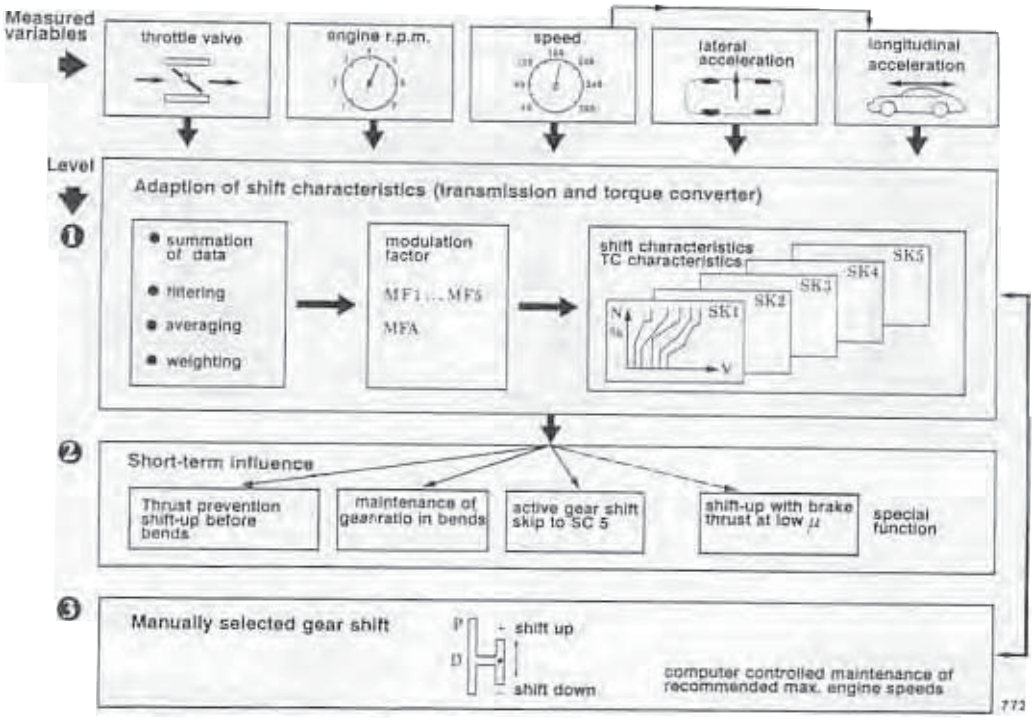

Automatic shift strategy

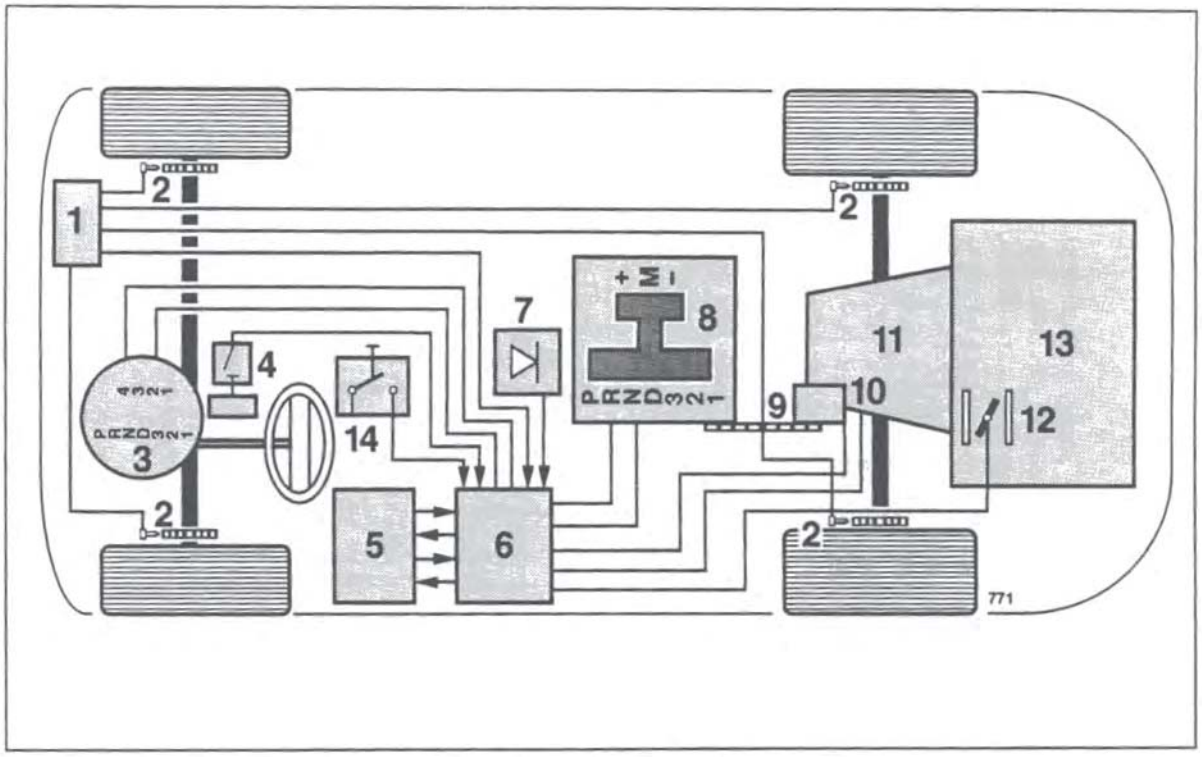

1 – ABS control unit
2 – ABS sensors at wheels
3 – Speedometer
4 – Kickdown switch
5 – DME control unit
6 – Electronic transmission control unit
7 – Transverse acceleration sensor
8 – Selector lever system with two gates
9 – Cable
10 – Multi-function switch
11 – Automatic transmission
12 – Throttle with potentiometer
13 – Engine
14 – Stop light switch

The electronic transmission control unit is the information and command center of the entire system. It compares a multitude of information inputs (measurements) with stored driving and gearshift programs, selects the map that is suited best to the driving mode and sends commands to the transmission to execute or not to execute specific gearshifts.
A short-term function activated by the driver is also available to allow the shift points to be controlled electronically by the driver.

In addition to "standard" shift control, the following programs or special functions are built into the system:

1 Automatic program

a – Adaptive shift curve adpatation
b – Skip into sporting shift map
c – Upshift prevention
d – Slip monitoring
e – Warm-up map
f – Transmission protection at high ATF temperatures
g – Electronic kickdown latching
h – Downshifting during braking (ahead of curves)

2 Manual program

a – Automatic shifts in M program

3 Special functions

a – Shift comfort control (change of ignition timing)
b – Creep function (moving off in 2nd gear)
c – Emergency mode
d – Adaptive pressure control
e – Uphill and downhill detection

1 Automatic program

1a Adaptive shift curve adaptation

The transmission control unit uses the following signals to determine the optimum shift curve:

Measuring parameter	Type of measurement
Throttle position	Potentiometer resistance
Throttle positioning speed	Time for change of resistance at potentiometer
Engine speed	Frequency measurement (from DME)
Vehicle speed	No. of pulses of transmission shaft rotor
Vehicle transverse acceleration	Signal of transverse acceleration sensor on center console
Vehicle axial acceleration / deceleration	Change of number of pulses within clock time (time-dependent change of speed)

The above signals and measurement parameters are determined within time intervals of 30...100 milliseconds and are processed in the control unit.
When these measurements are compared with the stored programs, factors are generated that can be used to enter or shift into one of the five shift maps.
The change from SC1 (very comfortable and economical shifting) to SC5 (very sporting shifting) can be accomplished within a minimum of 60 seconds.
Adaptive shift curve adaptation remains active all the time (including the manual program).

Note

In addition to five shift maps that are determined automatically by the control unit in accordance with the style of driving, the electronic transmission control can also be activated briefly by the driver (short-term input).

1b Active gear shift (Skip into sporting shift map SC5)

If the accelerator is depressed suddenly and abruptly, the system shifts immediately from the current shift map into the shift map offering maximum output (SC5). When the acceleration process is completed, the previously used shift map is selected again.

1c Upshift prevention

Prevents thrust upshifts ahead of bends

When the accelerator is released rapidly ahead of curves (throttle control speed), the control unit detects this driving situation and prevents shifting.

Staying in gear during cornering

The transverse aceleration sensor sends a signal to the control unit as soon as vehicle exceeds the transverse acceleration thresholds at which no shifts should be made. The engaged gear then remains selected regardless of any accelerator movement.

1d Slip monitoring

The engine braking effect during coasting, especially in the lower gears and on slippery surfaces, may cause the driven wheels to slip or even to lock. This status, i.e. the wheel speed difference between front and rear wheels, is detected by the transmission control unit (Using input from the ABS control unit, this unit constantly compares the speed of the driven wheels to the speed of the right-hand front wheel). To increase vehicle stability, the next higher gear is then selected immediately and the torque converter lockup clutch is opened.

1e Warm-up map

To ensure that the catalytic converter reaches its operating temperature as fast as possible, the transmission selects a shift map with higher shift speeds within the automatic program during the engine warm-up phase.
When moving off for the first time and while the engine is cold, the vehicle moves off in 1st gear.
The control signal is computed in the DME control unit and is sent to the transmission control unit.

1f Transmission protection at high ATF temperatures

To avoid excessive loads on transmission components due to overheating, the transmission control unit selects a shift map with minimum power loss within a specified temperature range and closes the torque converter lockup clutch.
As an additional protective measure, the transmission shifts down at higher engine speeds.

1g Electronic kickdown latching

The kickdown latching function allows the kickdown shift points (= max. rpm) to be used even at smaller throttle angles. The function is started when the kickdown switch is actuated and the accelerator is released rapidly (e.g. interrupted kickdown overtaking).
This condition is detected and processed by the transmission control unit. The kickdown shift speeds remain active until the accelerator is released to 50% of the full-throttle position.

1h Downshifting during braking (ahead of bends)

Depending on actuation of the brakes, brake deceleration, transverse acceleration and vehicle speed, downshifts are executed during braking at higher speeds than during normal vehicle deceleration. In the braking phase, downshifts into the next lower gear are made ahead of the curve. This allows the braking effect of the engine to be used and load on the service brakes to be reduced.

2 Manual program

2a Automatic shifts

The shift operations can also be influenced manually. For this purpose, move selector lever from the "D" position into the manual shift plane to the right. Short forward tipping (+) shifts the transmission up, while tipping towards the rear (-) shifts down. The transmission control unit monitors the admissible rpm limits in this program as well. If the rpm limits stored in the computer are exceeded or not reached in the individual gears, automatic upshifts or downshifts are made even if the selector lever remains in the manual gate.
Automatic downshifts are only made down to 2nd gear. If it is desired to move off in 1st gear (e.g. after stopping at a red light), 1st gear must be engaged by actuating the rocker switch.
The kickdown feature cannot be used since it is not activated in this program.
The selected gear is displayed in the speedometer.
If the manual selection feature fails, the electronic transmission control unit automatically shifts to the automatic program, and the "D" position is displayed on the selector lever position display.

3 Special functions

3a Shift comfort control (Change of ignition timing)

With this type of control, the transmission control unit is connected to the DME control unit. At the shift point, the engine control unit reacts by retarding the ignition timing. This reduces engine torque during the shift process, thus increasing shift comfort and ensuring a long service life of the shift actuators.
If the signal is faulty, "emergency mode" is selected.

3b Creep function (moving off in 2nd gear)

With this function, the vehicle moves off in shift position "D" and at a throttle angle < 35% in the automatic program and in 2nd gear in the manual program.
If the driver wants to move off in 1st gear, the throttle angle must be > 35% in the "D" shift position or position "3", "2" or "1" has to be preselected. In the manual program, 1st gear has to be selected to be activated (also refer to 1e, page 37 - 13).

Note

When moving off for the first time and while the engine is cold, the vehicle moves off in 1st gear.

3c Emergency mode

The electronic transmission control unit switches off the solenoid valves when specific signals or circuits become faulty and thus prevents gearshifts. If this occurs while the vehicle is in motion, 4th gear is selected regardless of the selector lever position and remains activated until the vehicle comes to a stop. When restarting the vehicle or after selecting reverse gear once, only third gear remains active.
A warning lamp in the clock displays this system fault and indicates that the electronic-hydraulic reverse interlock is inoperative. Take care never to move the shift lever to the "R" position while the vehicle is in motion.

3d Adaptive pressure control

Adaptive pressure control monitors the hydraulic shift pressures (modulating pressure) and adapts them to the transmission and driving status. This ensures good shift comfort throughout and increased service life of the shift actuators.

3e Uphill and downhill detection

In addition to using driving mode data when selecting the shift mode map, the intelligent shift program also takes the driving resistance into account as resistance changes make themselves felt especially on gradients and downhill slopes.
This detection feature causes the system to shift into the map that provides the optimum gear for that particular gradient. This reduces gearshift frequency, allowing the engine braking effect to be used to better effect when driving downhill in a lower gear and therefore requiring less frequent braking.

Printed in Germany – VI.1994

Tools

Test adapter 9543

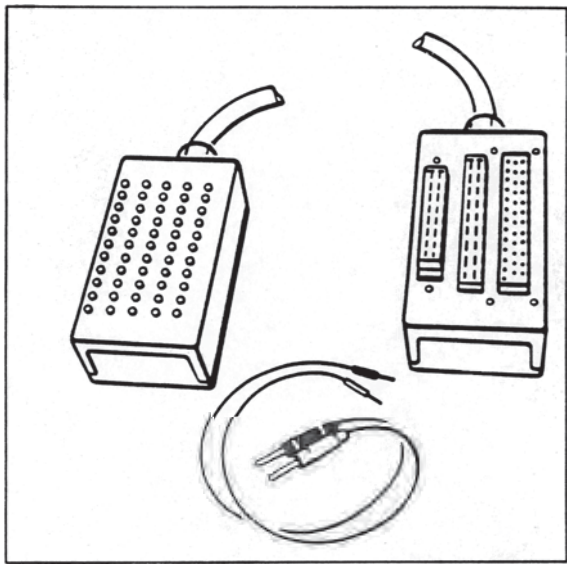

Note

The test adapter must be used for all tests on the electrical wiring (e.g. transmission control unit connector / sensors).
It protects the connectors and allows the individual pins to be located easier.

Connector pin assignment (Transmission control unit connector)

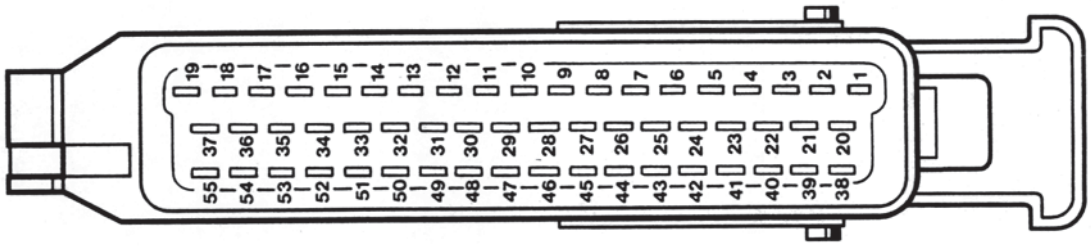

1 - Terminal 15 E
2 - Output rpm +
3 - Engine rpm (TN)
4 - Stop light
5 - Solenoid valve 1
6 - Solenoid valve modulating pressure
7 - Electronics - Ground
8 - Input +5 V (reference voltage)
9 - Pin coding 1
10 - Upshift
11 - Throttle signal
12 - Front wheel speed (FR)
13 - Manual program display
14 - Position Y switch
15 - L wire
16 - 1st gear display
17 - Not used
18 - Not used
19 - + for solenoid valves
20 - Shield / output rpm
21 - Load signal (Tl)
22 - Not used
23 - Warning lamp
24 - Solenoid valve 2
25 - Reverse light relay
26 - Power ground
27 - Not used
28 - Pin coding 2
29 - Downshift
30 - Kickdown
31 - 2nd gear display
32 - Change of ignition timing
33 - Position Z switch
34 - Not used
35 - Not used
36 - Not used
37 - Not used
38 - Output rpm –
39 - Terminal 30
40 - Transverse acceleration sensor
41 - Redundancy
42 - Lockup clutch solenoid valve
43 - 3rd gear display
44 - Ground (ATF temperature sensor/ transverse acceleration sensor)
45 - Output + 5V
46 - ATF-Temperature sensor
47 - Not used
48 - Input signal (manual program)
49 - Not used
50 - Position X switch
51 - K wire
52 - Not used
53 - Not used
54 - Not used
55 - 4th gear display

Fault memory

Overview of displays

```
XX: Voltage
-> control unit
Signal unplausible
present              XX
```

```
XX: Voltage
-> drive links
Open circuit
present              XX
```

```
XX: Voltage
-> Sensor
Op.circ/Ground short
present              XX
```

```
XX: Speed signal
<- DME-SG
Op.circ/Ground short
present              XX
```

```
XX: Load signal
<- DME-SG
Op.circ/Ground short
present              XX
```

```
XX: Change of
ignition timing
Op.circ/Ground short
present              XX
```

```
XX: Throttle plate
signal <- DME-SG
Op.circ/Ground short
present              XX
```

```
XX: Throttle plate
signal <- DME-SG
Read out DME
fault memory!
```

```
XX: Solenoid
valve 1
Op.circ/Ground short
present              XX
```

```
XX: Solenoid
valve 2
Op.circ/Ground short
present              XX
```

```
XX: Solenoid valve -
torque conv. clutch
Op.circ/Ground short
present              XX
```

```
XX: Pressure
regulator
Op.circ/Ground short
present              XX
```

```
XX: Transmission Gear
Selection Switch
Signal unplausible
present              XX
```

```
XX: Speed sensor

Op.circ/GND/+ short
present              XX
```

```
XX: Transmission
temperature sensor
Short to ground
present              XX
```

```
XX: Transmission Gear
Selection Switch
Signal unplausible
present              XX
```

```
XX: Control unit
faulty
XXXXXXXX
7 6 5 4 3 2 1 0
```

```
XX: Control unit
faulty
XXXXXXXX
7 6 5 4 3 2 1 0
```

```
XX: Control unit
faulty
XXXXXXXX
7 6 5 4 3 2 1 0
```

```
XX: Down-shift fault

Signal unplausible
present              XX
```

```
XX: Rev. limiter

Signal unplausible
present              XX
```

```
XX: Manual program
switch
Short to ground
present              XX
```

```
XX: Tip-switch
up/down shifting
Short to ground
present              XX
```

```
XX: Kick-down switch
Short to ground
present              XX
```

```
XX: Transverse accel.
sensor
Op.circ/Ground short
present              XX
```

```
XX: Combi-instrument
input
Short to +
present              XX
```

```
XX: -R- position
switch
Signal unplausible
present              XX
```

```
XX: Reverse light
relay
Short to +
present              XX
```

```
XX: Unknown
fault code
XXXXXXXX
7 6 5 4 3 2 1 0
```

Fault overview

Test point	Fault code	Item	Results of fault	Page
		Supply voltage (Term. 30)	No diagnosis	37 - 25
2	11	Supply voltage (Term. 15)	Emergency operation No display	37 - 25
3	13	Supply voltage, drive links	Emergency operation	37 - 26
4	14	Supply voltage, sensor 5 V	Emergency operation	37 - 26
5	21	Rpm signal (engine)	Emergency operation	37 - 27
6	22	Load signal	Emergency operation	37 - 27
7	24	Change of ignition timing	Emergency operation	37 - 28
8	25	Throttle potentiometer	Emergency operation	37 - 30
9	31	Solenoid valve 1	Emergency operation	37 - 30
10	32	Solenoid valve 2	Emergency operation	37 - 31
	33	Solenoid valve, torque conv. clutch	Emergency operation	37 - 31
12	34	Pressure regulator	Emergency operation	37 - 32
13	35	Selector lever switch	Emergency operation	37 - 33
14	36	Speed sensor, transmission	Emergency operation	37 - 35
15	37	Transmission temperature sensor	Replacement value 60°C	37 - 36
16	38	Selector lever switch (for starting)	Emergency operation	37 - 37
17	42	Control unit faulty	Emergency operation	37 - 37
18	43	Control unit faulty	Emergency operation	37 - 38
19	44	Control unit faulty	Emergency operation	37 - 38
20	45	Downshift protection	Emergency operation	37 - 38
21	46	Rev. limiter	Emergency operation	37 - 38
22	51	Manual program switch	No manual program	37 - 38
23	52	Up/down shift tip switch	No manual program	37 - 38
24	53	Kickdown switch	No kickdown	37 - 39
25	54	Transverse acceleration sensor	No upshift prevention	37 - 39

Test point	Fault code	Item	Results of fault	Page
26	55	Speed signal 1 (ABS)	No upshift prevention No manual program No downshift during braking	37 - 40
27	56	Combi-instrument input	No diagnosis	37 - 41
28	59	R-position switch	Emergency operation	37 - 41
29	60	Reverse light relay	No diagnosis	37 - 42
30	XX	Unknown fault code	Fault memory	37 - 42

Fault, fault code	Possible causes, remedy, notes
Test point 1 **Permanent positive (on-board voltage)**	**No diagnosis possible.** Possible faults: Open circuit, short to ground, loose contact **Note:** – **No fault storage** (Faults are lost when ignition is switched off) – Open circuit/short to ground: Check fuse No. 12 – Fuse faulty: Pull connector off transmission control unit Check pin 39 for short to ground – Short to ground? Check wiring according to wiring diagram – No short to ground: Transmission control unit faulty Fuse o.k.: Check voltage according to wiring diagram
Test point 2 **Control unit voltage** (Fault code 11 Signal unplausible)	**Emergency operation, no display** Possible faults: Open circuit, short to positive, short to ground, loose contact, voltage outside of valid range 1) Tiptronic warning lamp does not light when ignition is switched off Check fuse No. 27 Measure voltage at fuse No voltage: Check wire to relay R11 or operation of relay Measure voltage at transmission control unit connector pin 1 No voltage: Check wiring according to wiring diagram 2) Voltage outside of valid range Fault code 11 Signal unplausible – Low voltage? U < 11V Check battery, alternator, regulator! – O.k.? Check for contact resistance at junctions, deformation and corrosion of contacts – Excessive voltage? Check power supply of vehicle (alternator, regulator) U > 14.5 V with engine running

Printed in Germany, VI – 1994

Fault, fault code	Possible causes, remedy, notes
Test point 3 **Voltage of drive links** Fault code 13	**Tiptronic warning lamp comes on, transmission is in emergency mode** Possible faults: Transmission relay in control unit cannot pick up or drop out Pull off transmission connector. Measure voltage at pin M (system voltage) 1) No voltage: Pull off transmission control unit connector. Check wiring of transmission control unit pin 19 to transmission connector pin M Wiring o.k.: Transmission control unit faulty 2) Voltage cannot be switched off: Fault lamp does not come on when fault occurs (e.g. connector pulled off at throttle potentiometer) Pull off transmission control unit No voltage at pin M: Transmission control unit faulty Voltage at pin M: Short to positive in wiring (Transmission → transmission control unit)
Test point 4 **Voltage of sensors** Fault code 14	**Tiptronic warning lamp comes on, transmission is in emergency mode.** Possible faults: Open circuit, short to ground, short to positive Voltage supply 5 V ±0,5 V 1) Check voltage at transverse acceleration sensor pin 3 with ignition switched on 2) Pull connector off transmission control unit. Ignition "off" Check wiring from transmission control unit connector pin 45 to transverse acceleration sensor pin 3 for continuity. Short to ground and short to positive from transverse acceleration sensor pin 3 to pin 7 (ground) and pin 1 (15)

Fault, fault code	Possible causes, remedy, notes
Test point 5 **Rpm signal from DME** Fault code 21	**Tiptronic warning lamp comes on, transmission is in emergency mode** Possible faults: Open circuit/short to ground, short to positive, loose contact 1) Signal check Check signal with Tester 9288. (Engine operation) Check signal with oscilloscope at transmission control unit connector pin 3. If signal o.k.: Transmission control unit faulty 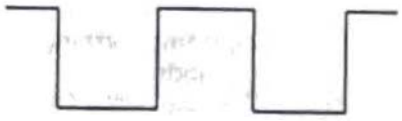 Signal shape 2) Open circuit, short to ground, short to positive Check wiring to wiring diagram. Check transmission control unit connector pin 3 to DME connector pin 6 for continuity, short to ground and short to positive. (Ground at transmission control unit = pin 7, positive at transmission control unit = pin 1) Connections o.k.: DME control unit faulty
Test point 6 **Load signal from DME** Fault code 22	**Tiptronic warning lamp comes on, transmission is in emergency mode** Possible faults: Open circuit, short to ground, short to positive, loose contact 1) Signal check Check signal with Tester 9288 (injection time) with engine running Check signal with oscilloscope at transmission control unit connector pin 21. 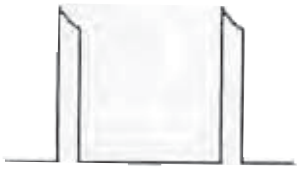

Fault, fault code	Possible causes, remedy, notes
	If signal o.k.: Transmission control unit faulty Signal shape: ti signal 2) Open circuit, short to ground, short to positive Check wiring according to wiring diagram. Check transmission control unit connector pin 21 to DME connector pin 17 for continuity, short to ground and short to positive (Ground at transmission control unit connector = pin 7, positive at transmission control unit connector = pin 1) Connections o.k.: DME control unit faulty
Test point 7 **Chang eof ignition timing** Fault code 24	**Tiptronic warning lamp comes on, transmission is in emergency mode** Possible faults: Open circuit, short to ground, short to positive 1) Check operation with Tester 9288 (drive link test) Idle speed must drop. If it does not, check as follows: 2) Check voltage drop – Remove cover of plugged-in connector X4/1 – Switch on ignition – Measure voltage at pin 7. Specification: approx. 5 Volt – Trigger signal with Tester. Voltage must drop – Operation o.k.: Check wiring to DME control unit (Connector X 4/1 pin 7 to DME control unit pin 51) – Wiring o.k.: DME control unit faulty – Operation not o.k.: Check wiring to transmission control unit (connector X4/1 pin 7 to transmission control unit connector pin 32) – Wiring o.k.: Transmission control unit faulty Note: Check engine to body ground strap

Fault, fault code	Possible causes, remedy, notes

Connector X 4/1 (below left seat)

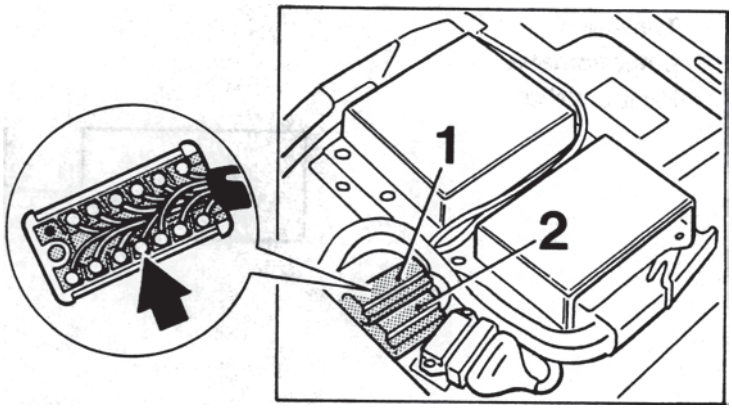

1 = Connection X 4/1

Fault, fault code	Possible causes, remedy, notes

Test point 8

Throttle potentiometer
Fault code 25

Tiptronic warning lamp comes on, transmission is in emergency mode

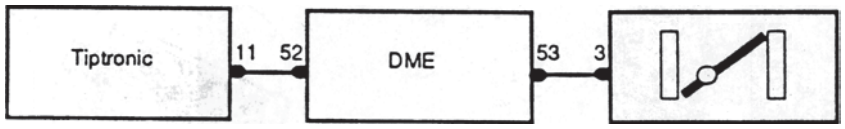

Detectable faults: Open circuit/short to ground, short to positive

The "Throttle potentiometer" fault is also stored in the DME, the fault must be corrected according to the DME test plan (Test point 3)

Tiptronic test:

Check display % with Tester 9288 (Actual values menu)

If no display:

1) Measure voltage signal at transmission control unit connector pin 11 with voltmeter.Vary from 1 V at idle to approx. 10 V at full throttle (Ignition on)

If no voltage:

2) Check wiring according to wiring diagram.
Check transmission control unit connector pin 11 to DME pin 52 for continuity, short to ground and short to positive (ground at transmission control unit connector =pin 7, positive at trans mission control unit connector =pin 1)

If continuity o.k. = DME control unit faulty

If voltage o.k. =Transmission control unit faulty

Test point 9

Solenoid valve 1
Fault code 31

Tiptronic warning lamp comes on, transmission is in emergency mode
Possible faults: Open circuit, short to ground, short to positive

1) Check operation with Tester 9288 (Drive link test)

Fault, fault code	Possible causes, remedy, notes
	– Acoustical test Triggering cycle of solenoids is audible as a clicking noise near the transmission 2) Pull connector off transmission control unit. a) Measure resistance between pin 5 and pin 19. Specification: 34 Ohms, tolerance 10 % b) Check that pins 5 and 19 are free from shorts to ground – Check o.k.: Transmission control unit faulty 3) Also pull off connector at transmission. Check wiring (transmission control unit connector pin 5 to transmission connector pin H and transmission control unit connector pin 19 to transmission connector pin M). Wiring o.k.: Solenoid valve faulty Note: If a "sporadic solenoid fault" occurs, check connections for pushed-back pins.
Test point 10 **Solenoid valve 2** Fault code 32	**Tiptronic warning lamp comes on, transmission is in emergency mode** Possible faults: Open circuit, short to ground, short to positive 1) Check operation with Tester 9288 (Drive link test) – Acoustical test Triggering cycle of solenoids is audible as a clicking noise near the transmission. 2) Pull off connector at transmission control unit a) Measure resistance between pin 24 and pin 19. Specification: 34 Ohms, tolerance 10 % b) Check that pins 24 and 19 are free from shorts to ground. Check o.k.: Transmission control unit faulty 3) Also pull off connector from transmission. Check wiring (transmission control unit connector pin 24 to transmission connector pin K and transmission control unit connector pin 19 to transmission connector pin M). Wiring o.k.: Solenoid valve faulty

Printed in Germany, VI – 1994

Fault, fault code	Possible causes, remedy, notes
Test point 11 **Solenoid valve torque conv. clutch** Fault code 33	**Tiptronic warning lamp comes on, transmission is in emergency mode** Possible faults: Open circuit, short to ground, short to positive 1) Check operation with Tester 9288 (Drive link test) Acoustical test Triggering cycle of solenoids is audible as a clicking noise near the transmission. 2) Pull off connector from transmission control unit a) Measure resistance between pin 42 and pin 19 Specification: 34 Ohms, tolerance 10 %. b) Check that pins 42 and 19 are free from shorts to ground Check o.k.: Transmission control unit faulty 3) Also pull off connector from transmission Check wiring (transmission control unit connector pin 42 to transmission connector pin L and transmission control unit connector pin 19 to transmission connector pin M) Wiring o.k.: Solenoid valve faulty
Test point 12 **Pressure regulator** Fault code 34	**Tiptronic warning lamp comes on, transmission is in emergency mode** Possible faults: Open circuit, short to ground, short to positive 1) Pull off connector from transmission control unit a) Measure resistance between pin 6 and pin 19 Specification: 6 Ohms ±2 Ohms b) Check that pins 6 and 19 are free from shorts to ground Check o.k.: Transmission control unit faulty 2) Also pull off connector from transmission – Check wiring (Transmission control unit connector pin 6 to transmission connector pin B and transmission control unit connector pin 19 to transmission connector pin M) – Wiring o.k.: Pressure regulator faulty

Fault, fault code	Possible causes, remedy, notes

Test point 13

Selector lever switch/transmission Fault code 35

Tiptronic warning lamp comes on, transmission is in emergency mode

Possible faults: Open circuit, short to ground, short to positive

1) Check operation with Tester 9288

Adjustment of Tester 9288:
Menu: „Input signals" = Selector lever/Manual program

Shift through selector lever positions P, R, N, D, 3, 2, 1 one after another.

Compare: Selector lever position
Position indicator in speedometer
Position indicator on Tester 9288

Caution:

Due to its design, the display on Tester 9288 appears with a certain delay - shift through positions sufficiently slowly.

No matching: Check wiring according to wiring diagram, check position switch with/without wiring

2) Pull off transmission control unit connector, switching ignition off

- Use ohmmeter to check transmission control unit connector pin 7 for ground
- If no ground is present, refer to wiring diagram MP IV

3) Measure position switch according to table 1

Ohmmeter display – = No continuity
0 = Continuity

Table 1

	Pin 14	Pin 33	Pin 50	Pin 41 → to ground
P	–	–	0	0
R	0	–	0	0
N	0	–	–	–
D	0	0	–	–
3	0	0	0	–
2	–	0	0	
1	–	0	–	

Measurements o.k.: Control unit faulty

Measurements present, but incorrect sequence?

Check cable from selector lever switch to position switch

Printed in Germany, VI – 1994

Fault, fault code	Possible causes, remedy, notes

- Is cable adjusted correctly?
- Repair instructions: „Adjust position switch"
- Open circuit, short to ground, short to positive?

4) Check position switch without connections
- Pull connector off the switch
- Check switch for continuity acc. to Table 2

Fig. 7

Ohmmeter display

– = No continuity
0 = Continuity

Table 2

Pin	E-B	E-C	E-A	F-G	H-D
P	–	–	0	0	0
R	0	–	0	–	0
N	0	–	–	0	–
D	0	0	–	–	
3	0	0	0		
2	–	0	0		
1	–	0	–		

Faulty? Replace position switch

Fault, fault code	Possible causes, remedy, notes
Test point 14 **Speed sensor (Transmission)** The sensor transmits the transmission speed. The transmission control unit compares it to the wheel speed. Fault code 36	**Tiptronic warning lamp comes on, transmission is in emergency mode** Possible faults: Open circuit, short to ground, short to positive, loose contact **Note:** Check with Tester 9288 (Actual values). Store fault as of engine speed = 2,800 rpm 1) Pull off connector from transmission control unit a) Measure resistance between pin 2 and pin 38. Specification: approx. 350 Ohms b) Check that pin 2 and pin 38 are free from shorts to ground. Check o.k.: Transmission control unit faulty 2) Also pull connector off the transmission. Check continuity: Transmission control unit connector pin 2 to pin A Pin 38 to pin F Short to ground from pin 2 and pin 38 to pin 7 (ground) Pin 2 and pin 38 to pin 20 (screening) Short to positive from pin 2 and pin 38 to pin 1 (positive) **Note:** If it is to be assumed that intermittent faults linked to the output speed occur, check the screening connection at pin 20 after opening the connector housing Wiring o.k.: Check sensor and wiring in transmission Possible transmission faults: ATF strainer clogged, air intake if oil starvation occurs etc., power transmission interrupted

Fault, fault code	Possible causes, remedy, notes
Test point 15 **Transmission temperature sensor** Fault code 37	**If a fault occurs, a replacement value 60° C is assumed.** Possible faults: Open circuit, short to ground, short to positive, corrupted signal **Note:** Existing faults are stored only when the engine is running. 1) Check temperature with Tester 9288 (Actual values) 2) Pull off connector from transmission control unit Measure resistance between pin 46 and pin 44 Specification: approx. 1,00 kΩ/20° C 1,15 kΩ/40° C 1,30 kΩ/60° C Check wiring. Check o.k.: Transmission control unit faulty **Note:** If the display "Temperature sensor short to positive" and/or "Transverse acceleration sensor short to positive" appears, the control unit may be faulty. 1. Repair short circuit 2. Replace control unit.

Fault, fault code	Possible causes, remedy, notes
Test point 16 **Selector lever switch/transmission** Fault code 38	**Tiptronic warning lamp comes on, transmission is in emergency mode** Specification: Engine can be started in P or N positions only Actual status: Engine can also be started in selector lever positions other than P and N Possible faults: Open circuit, short to ground, short to positive Start is possible except in P and N 1) Check adjustment of bowden cable to position switch If required, run electrical tst as described under Test point 13, item 4 No start possible? 2) Pull off start relay R 61 from Central Electrical System – Ground must be present at relay base terminal 85 when the selector lever is set to P and N. – Ground is present: Check start relay and ignition switch with related wiring – No ground: Check position switch and wiring to start relay 3) Check position switch as described under Test point 13, item 4 Position switch o.k. Check continuity: a) Position switch pin G to start relay R61. b) Junction X4/1 pin 6 to DME connector pin 42 Wiring o.k. Transmission-related starting requirements are met.
Test point 17 **Control unit faulty** Fault code 42	**Tiptronic warning lamp comes on, transmission is in emergency mode** Replace control unit

Fault, fault code	Possible causes, remedy, notes
Test point 18 **Control unit faulty** Fault code 43	**Tiptronic warning lamp comes on, transmission is in emergency mode** Replace control unit
Test point 19 **Control unit faulty** Fault code 44	**Tiptronic warning lamp comes on, transmission is in emergency mode** Replace control unit
Test point 20 - 21 **Downshift fault/ rev. limiter** Fault code 45, 46	**Tiptronic warning lamp comes on, transmission is in emergency mode** Possible faults: Corrupted rpm signal from output or engine, or incorrect output/engine rpm ratio Faulty transmission (Clutch slips) 1) Check inductive rpm sensor, Test point 14 2) Check transmission
Test point 22 **Manual program switch** Fault code 51	**No manual program available** Detectable faults: Short to ground 1) Check operation with Tester 9288 (Input signals) 2) Pull off connector from transmission control unit Check ground at pin 26. Check connection from transmission control unit connector pin 48 to selector lever switch/pin 3 Connection o.k. Replace selector lever switch plate Switch and connection o.k.: Transmission control unit faulty
Test point 23 **Upshift/downshift tip switch** Fault code 52	**No manual program available** Detectable faults: Short to ground 1) Check operation with Tester 9288 (Input signals) 2) Pull off connector from transmission control unit Check ground at pin 26

Fault, fault code	Possible causes, remedy, notes
	Check connection from transmission control unit connector / pin 10 an selector lever switch/pin 2 (upshift) or connection from transmission control unit connector/pin 29 to selector lever switch/pin 1 (downshift). Connection o.k.: Replace selector lever switch unit Switch and connection o.k.: Transmission control unit faulty
Test point 24 **Kick-down switch** Fault code 53	**No kickdown shift** Detectable faults: Short to ground 1a) Acoustical switch test b) Check operation with Tester 9288 (Input signals test) 2) Remove and check kickdown switch (Note: Adjust switch after replacement) 3) Pull off connector from transmission control unit. Check connection from transmission control unit connector pin 30 to kickdown switch pin 2. Check o.k.: Transmission control unit faulty
Test point 25 **Transverse acceleration sensor** Fault code 54	**Upshifting in curves is not prevented** Detectable faults: Open circuit/short to ground, short to positive 1) Check sensor with Tester 9288 (Actual values) (Nominal value approx. 0 g with vehicle on a level surface. The sensor can be checked by raising the vehicle on one side) 2) Pull connector off the sensor. Check sensor supply (5 V) at pin 3 and ground at pin 1. 3) Check wiring according to wiring diagram Check continuity: Pin 45/transmission control unit connector to pin 3/sensor Pin 40/transmission control unit connector to pin 2/sensor Pin 44/transmission control unit connector to pin 1/sensor Short to ground: Pin 2 and pin 3/sensor to pin 7/transmission control unit connector (ground) Short to positive: Pin 1, 2 and 3/sensor to pin 1/transmission control unit connector (positive)

Fault, fault code	Possible causes, remedy, notes
	Wiring o.k.: Replace sensor Fault persists: Transmission control unit faulty
Test point 26 **Speed signal 1 of ABS** Fault code 55	**Upshifting is not prevented, no manual program** Detectable faults: Open circuit/short to ground/short to positive 1) Signal comes from ABS. ABS o.k.? 2) Check signal with Tester 9288, raising the vehicle and rotating right-hand front wheel manually. 3) Check wiring according to wiring diagram Check continuity: Pin 12/transmission control unit connector to ABS control unit connector pin 42

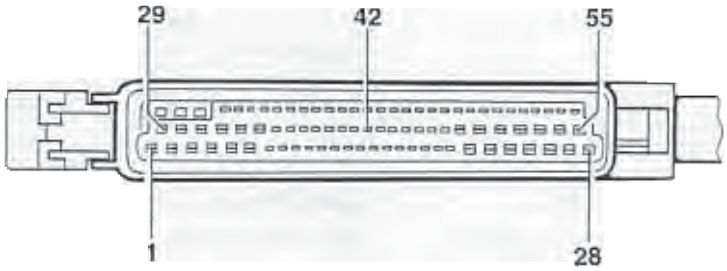

Short to ground: Pin 12 to pin 7/transmission control unit connector (ground)

Short to positive: Pin 12 to pin 1/transmission control unit connector (positive)

4) Check signal with oscilloscope (transmission control unit connector pin 12) (ignition on)

Fault, fault code	Possible causes, remedy, notes
	Speed signal

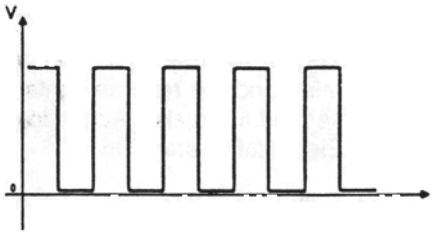

Signal present: Transmission control unit faulty

No signal: ABS faulty

Test point 27

Combi-instrument input

Fault code 56

No diagnosis possible.

Detectable faults: Open circuit/short to ground, short to positive

1) Switch manual program on and off
   Check display in instrument

2) Pull off transmission control unit connector. Connect pin 13 to ground.
   Display o.k.: EGS faulty

3) Check wiring of transmission control unit pin 13 to speedometer pin 9.

Wiring o.k. Speedometer faulty

Test point 28

R-position switch

Fault code 59

Tiptronic warning lamp comes on, transmission is in emergency mode

Possible faults: Open circuit, short to ground, signal unplausible

1) Ground must be present at pin 41 when selector lever switch is in position P, R (N is is possible due to overlaps).

   No ground: Check wiring from transmission control unit connector pin 41 to position switch connector D.

   Wiring o.k. Check position switch as under Test point 13 item 4

Printed in Germany, VI – 1994

Fault, fault code	Possible causes, remedy, notes
Test point 29 **Reverse light relay** Fault code 60	**No diagnosis possible.** Detectable faults: Open circuit/short to ground, short to positive 1) Trigger reverse light relay with Tester 9288 (Drive links). The relay and the reverse lights must switch on and off in two-second intervals. (Acoustical test. Relay is located in Central Electrical System R51). 2) Pull off connector from transmission control unit. Short-circuit pin 25 to ground (pin 7). Does reverse light relay pick up? Transmission control unit faulty 3) Pull off reverse light relay. Check voltage at terminal 30 of relay base. Check connection from transmission control unit connector/pin 25 to relay base/terminal 85. Wiring o.k.: Relay faulty
Test point 30 **Unknown fault code** Fault code XX	Check ground points

37 01 Tiptronic Diagnosis / Troubleshooting

Diagnosis / Troubleshooting

Tiptronic

System G10

Contents

	Page
General Information	37 - 45
Data output with system tester 9288	37 - 47
Country coding	37 - 49
Component layout	37 - 51
Functions of individual components	37 - 52
System description	37 - 55
Connector pin assignment (transmission control unit)	37 - 63
Fault overview	37 - 65

General information

A self-diagnosis feature with fault memory is built into the transmission control unit to allow specific faults within the electronic Tiptronic control to be detected and stored.

Positive potential is permanently connected to the control unit (pin 26) so that detected and stored faults are not deleted when the ignition is switched off.

The "restricted driving program" is activated if terminal 15 (pin 55) should fail. The Tiptronic warning lamp does not light up, however.

Stored faults can be deleted only with the system tester.

Diagnosis cannot be started in the "restricted driving program" and if the diagnosis leads are defective (see page 03 - 3).

Never pull off or push on control unit connectors with the ignition switched on.

Data output with system tester 9288

Tiptronic G10
As of module version 8.0

System texts

```
     TIPTRONIC
System:G10TIPTRONIC
SerNr.:9936181200
```

Menu

```
    Menu
1=DTC memory
2=Drive links
3=Switching inputs>
```

```
<    Menu
1=Actual values
2=Country coding
```

Drive link texts

```
 Drive links
1=Solenoid valve 1
2=Solenoid valve 2
3=Converter clutch>
```

```
<  Drive links
1=Gear display 1-4
2=Reversing relay
3=Shiftlock          >
```

```
<  Drive links
1=Ignition angle
intervention
```

Switching inputs

```
 Switching inputs
1=Kickdown
2=Downshifting
3=Upshifting
```

```
<  Switching inputs
1=Manual program
2=Multi-function sw.
3=Brake light
```

Actual values

```
 Actual values
1=Wheel speed
2=v   (FR)
3=v   (FL)           >
```

```
<  Actual values
1=v  transmission
2=Throttle valve
3=Temperature        >
```

```
<  Actual values
1=Gear
2=Voltage supply
3=Variant coding
```

Country coding

```
 Country coding
ROW WORKSHOP         *
1=Coding
return:              N
```

Country coding

Transmission control units must be coded for the required country version as of the '96 mod. (Tiptronic system G10).

Three country versions are available:
C... ROW (rest of world)
C02 USA
C14 Taiwan
When the control unit is replaced, it must be coded on a country-specific basis.

Connect system tester 9288 and call the Country Coding menu.

```
     Country coding
USA Manufacturer.......*
1=code
back:                  N
```

The coded version and where the control unit was coded are displayed in the first line of the Country Coding menu.

Note

Replacement control units are delivered with USA coded as the country version.

Press button 1 for coding.

The country selection menu appears.

```
1=ROW
2=USA
3=Taiwan
back:                  N
```

In order to code a certain country, press the corresponding button (e.g. button 1 for ROW).

```
    Country coding
ROW    WORKSHOP        *
1=code
back:                  N
```

Component layout

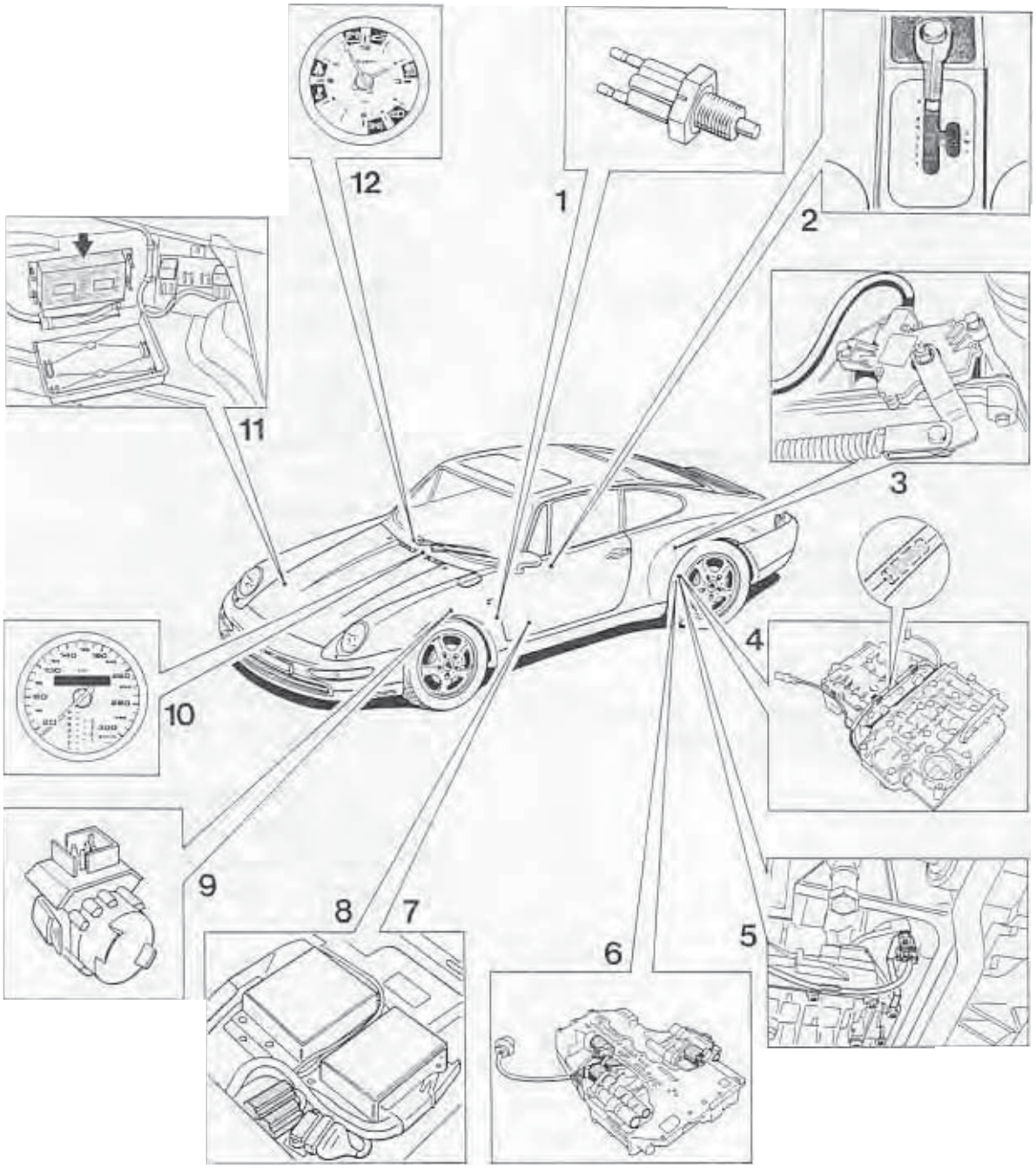

Functions of individual components

1. Stop light switch

Installation position: At brake pedal.
A stop light switch signal must be sent to the transmission control unit to start downshifts before entering a curve (refer to 1 h, page 37 - 59).

2. Selector lever

The selector lever transmits the selector lever position across a bowden cable to the transmission and to the position switch.

2a. Selector lever switch

It includes the manual, upshift, downshift and parking switches.

Manual switch

It connects the transmission control unit to ground in the manual gate in order to enable manual tip shifting.

Upshift switch

It connects the transmission control unit to ground to start an upshift.

Downshift switch

It connects the transmission control unit to ground to start a downshift.

3. Position switch

Installation position: At transmission.
The position switch is operated directly by the selector lever across a bowden cable and transmits the selector lever position to the transmission control unit. It operates the reverse lights and is used to lock the starter when a drive position is engaged.
If this signal is faulty, the system enters the "emergency mode".

4. ATF temperature sender unit

Installation position: The sender is built into the transmission harness. If it is damaged, the entire wiring harness has to be replaced (refer volume 3, page 38 - 111).

The sender controls the modulating pressure of the transmission in accordance with the ATF temperature. This helps to provide comfortable shifting operations across the entire temperature range.
If the ATF temperature reaches excessive levels, the control unit selects a map with minimum power loss and closes the torque converter lockup clutch. Additionally, downshifts are made at higher engine speeds. This reduces slip inside the toruqe converter, allowing the ATF to cool down.

If the actual voltage excceds or remains below the specified signal voltage range, the sender is assumed to be faulty. A 60°C replacement value is then used for the shift operations.

11. Emergency mode warning lamp

The warning lamp in the clock lights up **briefly** when the ignition is switched on. If this lamp comes on while the car is in motion, this is due to a system fault, causing the emergency mode to be selected. This warning lamp also indicates that the electro-hydraulic reverse lock is inoperative (refer to 3c, page 37-61).

12. ABS control unit

Installation position: In luggage compartment (right-hand wheel housing).
The ABS control unit is connected to the transmission control unit. It transmits the speed of the front wheels for the slip monitoring function (see 1d, page 37-59)

11. Emergency mode warning lamp

The warning lamp in the clock lights up **briefly** when the ignition is switched on. If this lamp comes on while the car is in motion, this is due to a system fault, causing the emergency mode to be selected. This warning lamp also indicates that the electro-hydraulic reverse lock is inoperative (refer to 3c, page 37-61).

12. ABS control unit

Installation position: In luggage compartment (right-hand wheel housing).
The ABS control unit is connected to the transmission control unit. It transmits the speed of the front wheels for the slip monitoring function (see 1d, page 37-59)

System description

The Tiptronic transmission is a load-shift planetary transmission that can be shifted either automatically or manually (via a rocker switch).
The transmission is controlled by an electronic transmission control system that selects automatically among five different shift maps (KF1 = map for very comfortable and economical driving, to KF5 = map for very sporting driving).

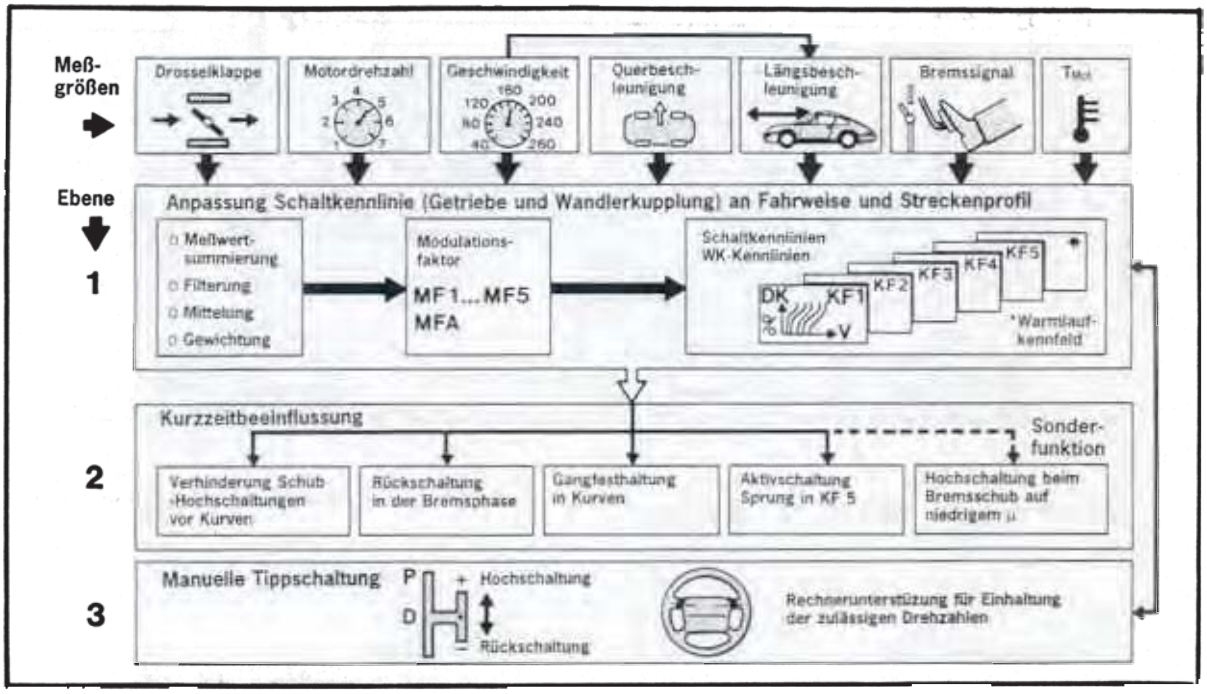

2371-37

Automatic shift strategy

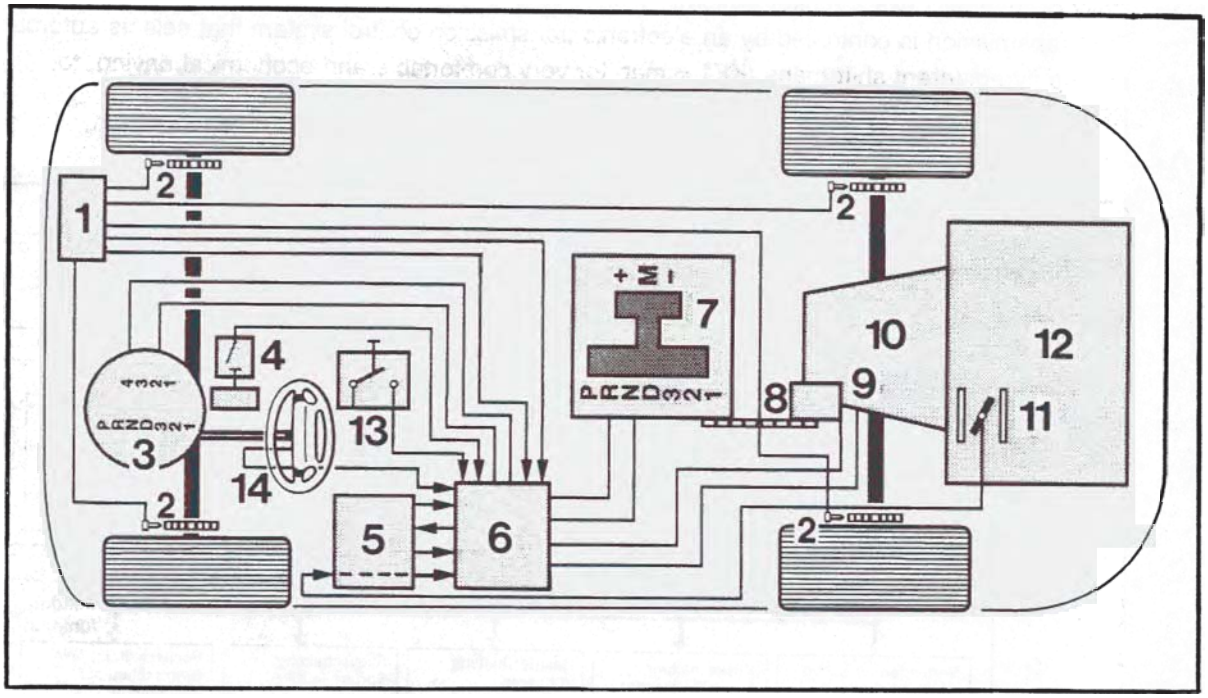

1 – ABS control unit
2 – ABS sensors at wheels
3 – Speedometer
4 – Kickdown switch
5 – DME control unit
6 – Electronic transmission control unit
7 – Selector lever system with two gates
8 – Cable
9 – Multi-function switch
10 – Automatic transmission
11 – Throttle with potentiometer
12 – Engine
13 – Stop light switch
14 – Manual switch on steering wheel

The electronic transmission control unit is the information and command center of the entire system. It compares a multitude of information inputs (measurements) with stored driving and gearshift programs, selects the map that is suited best to the driving mode and sends commands to the transmission to execute or not to execute specific gearshifts.
A short-term function activated by the driver is also available to allow the shift points to be controlled electronically by the driver.

In addition to "standard" shift control, the following programs or special functions are built into the system:

1 Automatic program

a – Adaptive shift curve adpatation
b – Skip into sporting shift map
c – Upshift prevention
d – Slip monitoring
e – Warm-up map
f – Transmission protection at high ATF temperatures
g – Electronic kickdown latching
h – Downshifting during braking (ahead of curves)

2 Manual program

a – Automatic shifts in M program

3 Special functions

a – Shift comfort control (change of ignition timing)
b – Creep function (moving off in 2nd gear)
c – Emergency mode
d – Adaptive pressure control
e – Uphill and downhill detection

1 Automatic program

1a Adaptive shift curve adaptation

The transmission control unit uses the following signals to determine the optimum shift curve

Measuring parameter	Type of measurement
Throttle position	Potentiometer resistance
Throttle positioning speed	Time for change of resistance at potentiometer
Engine speed	Frequency measurement (from DME)
Vehicle speed	No. of pulses of transmission shaft rotor
Vehicle transverse acceleration	from the difference between the front wheel speeds
Vehicle axial acceleration / deceleration	from the transmission output speed

The above signals and measurement parameters are determined within time intervals of 20...100 mil liseconds and are processed in the control unit.
When these measurements are compared with the stored programs, factors are generated that can be used to enter or shift into one of the five shift maps.
The change from KF1 (very comfortable and economical shifting) to KF5 (very sporting shifting) can be accomplished within a minimum of 60 seconds.
Adaptive shift curve adaptation remains active all the time (including the manual program).

Note

In addition to five shift maps that are determined automatically by the control unit in accordance with the style of driving, the electronic transmission control can also be activated briefly by the driver (short-term input).

1b Active gear shift (Skip into sporting shift map KF5)

Spontaneous, abrupt acceleration results in an immediate transition from the currently active shifting characteristic with the maximum possible power output (KF5), which leads to downshifting. When the acceleration process is completed, the previously used shift map is selected again.

1c Upshift prevention

Prevents thrust upshifts ahead of bends

If the driver releases the accelerator rapidly - ahead of a curve for example - (throttle valve positioning speed), the control unit detects this driving situation and prevents upshifting.

Shift prevention in curves

When certain lateral acceleration limits beyond which upshifting must never take place are reached, the transmission is kept in the current gear despite any accelerator movement.

1d Slip monitoring

The engine braking effect during coasting, especially in the lower gears and on slippery surfaces, may cause the driven wheels to slip or even to lock. This status, i.e. the wheel speed difference between front and rear wheels, is detected by the transmission control unit (Using input from the ABS control unit, this unit constantly compares the speed of the driven wheels to the speed of the right-hand front wheel). To increase vehicle stability, the next higher gear is then selected immediately and the torque converter lockup clutch is opened.

1e Warm-up map

To ensure that the catalytic converter reaches its operating temperature as fast as possible, the transmission selects a shift map with higher shift speeds within the automatic program during the engine warm-up phase.
Furthermore, the vehicle moves off in 1st gear when the engine is cold.
The control signal is computed in the DME control unit and is sent to the transmission control unit.

1f Transmission protection at high ATF temperatures

To avoid excessive loads on transmission components due to overheating, the transmission control unit selects a shift map with minimum power loss within a specified temperature range and closes the torque converter lockup clutch.
As an additional protective measure, the transmission shifts down at higher engine speeds.

1g Electronic kickdown latching

The kickdown latching function allows the kickdown shift points (= max. rpm) to be used even at smaller throttle angles. The function is started when the kickdown switch is actuated and the accelerator is released rapidly (e.g. interrupted kickdown overtaking).
This condition is detected and processed by the transmission control unit. The kickdown shift speeds remain active until the accelerator is released to 50% of the full-throttle position.

1h Downshifting during braking (ahead of bends)

Depending on actuation of the brakes, brake deceleration, transverse acceleration and vehicle speed, downshifts are executed during braking at higher speeds than during normal vehicle deceleration. In the braking phase, downshifts into the next lower gear are made ahead of the curve. This allows the braking effect of the engine to be used and load on the service brakes to be reduced.

2 Manual program

2a Automatic shifts

The shift operations can also be influenced manually. For this purpose, move selector lever from the "D" position into the manual shift plane to the right. Upshifting is performed by briefly pushing the selector lever to the front (+), and downshifting by briefly pulling the selector lever to the rear (-) (also possible via rocker switches in the steering wheel). The transmission control unit monitors the admissible rpm limits in this program as well. If the rpm limits stored in the computer are exceeded or not reached in the individual gears, automatic upshifts or downshifts are made even if the selector lever remains in the manual gate.
Automatic downshifts are only made down to 2nd gear. If it is desired to move off in 1st gear (e.g. after stopping at a red light), 1st gear must be engaged by actuating the rocker switch.
The kickdown feature cannot be used since it is not activated in this program.
The selected gear is displayed in the speedometer.
If the manual selection feature fails, the electronic transmission control unit automatically shifts to the automatic program, and the "D" position is displayed on the selector lever position display.

3 Special functions

3a Shift comfort control (Change of ignition timing)

With this type of control, the transmission control unit is connected to the DME control unit. At the shift point, the engine control unit reacts by retarding the ignition timing. This reduces engine torque during the shift process, thus increasing shift comfort and ensuring a long service life of the shift actuators.
If the signal is faulty, "emergency mode" is selected.

3b Creep function (moving off in 2nd gear)

With this function, the vehicle moves off in shift position "D" and at a throttle angle < 35% in the automatic program and in 2nd gear in the manual program.
If the driver wants to move off in 1st gear, the throttle angle must be > 35% in the "D" shift position or position "3", "2" or "1" has to be preselected. In the manual program, 1st gear has to be selected to be activated (also refer to 1e, page 37 - 59).

Note

The vehicle moves off in 1st gear when the engine is cold.

3c Emergency mode

The electronic transmission control unit switches off the solenoid valves when specific signals or circuits become faulty and thus prevents gearshifts. If this occurs while the vehicle is in motion, 4th gear is selected regardless of the selector lever position and remains activated until the vehicle comes to a stop. When restarting the vehicle or after selecting reverse gear once, only third gear remains active.
A warning lamp in the clock displays this system fault and indicates that the electronic-hydraulic reverse interlock is inoperative. Take care never to move the shift lever to the "R" position while the vehicle is in motion.

3d Adaptive pressure control

Adaptive pressure control monitors the hydraulic shift pressures (modulating pressure) and adapts them to the transmission and driving status. This ensures good shift comfort throughout and increased service life of the shift actuators.

3e Uphill and downhill detection

In addition to using driving mode data when selecting the shift mode map, the intelligent shift program also takes the driving resistance into account as resistance changes make themselves felt especially on gradients and downhill slopes.
This detection feature causes the system to shift into the map that provides the optimum gear for that particular gradient. This reduces gearshift frequency, allowing the engine braking effect to be used to better effect when driving downhill in a lower gear and therefore requiring less frequent braking.

Tiptronic connector pin assignment

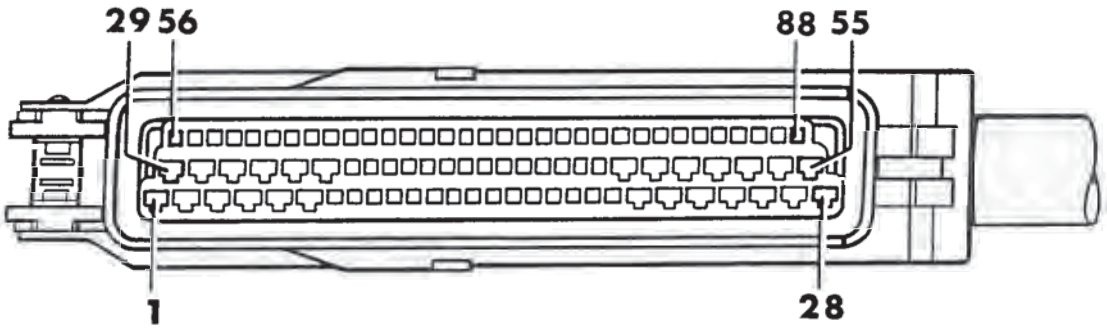

2378-37

1 - Relay, reverse light
2 - Shiftlock
3 - Not used
4 - Not used
5 - Solenoid valve/pressure regulator
6 - Power ground
7 - Throttle-valve signal, engine temperature
8 - Switch position Y
9 - Redundancy
10 - Brake light
11 - Not used
12 - Pin coding 1 (3, 6 1)
13 - Input signal, manual program
14 - Output speed
15 - Shield, output speed
16 - Not used
17 - OBDII fault lamp
18 - Kickdown
19 - Not used
20 - Engine intervention
21 - Sensor ground
22 - ATF temperature
23 - Not used
24 - Fault lamp
25 - Display, 2nd gear
26 - Terminal 30
27 - Display, 1st gear
28 - Electronics ground
29 - Not used
30 - Solenoid valve 1
31 - K wire
32 - Solenoid valve, torque converter lockup clutch
33 - Solenoid valve 2
34 - Not used
35 - Load signal (TR)
36 - Switch position X
37 - Switch position Z
38 - Upshifting
39 - Front-wheel speed, right
40 - Front-wheel speed, left
41 - L wire
42 - Output speed +
43 - Engine speed (TN)
44 - Not used
45 - Not used
46 - Display, 3rd gear
47 - Downshifting
48 - Not used
49 - Not used
50 - Display, 4th gear
51 - Display, manual program

52 - Not used
53 - Plus solenoid valve, pressure regulator
54 - Not used
55 - Terminal 15 E

Note
Pins 56 to 88 are not assigned.

Test point	Fault code	Title	Causes	Page
1	11	Voltage <ECM control unit	Restricted driving	37 - 67
2	21	Rpm signal < ECM control unit	Restricted driving program	37 - 67
3	22	Load signal <ECM control unit	Hard shifting	37 - 68
4	24	Ignition-angle intervention (plus)	Hard shifting	37 - 68
5	25	Throttle-valve signal <ECM control unit Read out DTC memory	Default throttle valve value 9% No kickdown	37 - 70
6	31	Solenoid valve 1	Restricted driving program	31 - 71
7	32	Solenoid valve 2	Restricted driving program	37 - 72
8	33	Solenoid valve, torque converter clutch	Restricted driving program	37 - 73
9	34	Pressure regulator	Restricted driving program	37 - 74
10	35	Multi-function switch	Restricted driving program	37 - 74
11	36	Speed sensor Transmission	Restricted driving program	37 - 76
12	37	Temperature sensor, transmission	Default value 60°C	37 - 77
13	38	Multi-function switch (start)	Restricted driving program	37 - 78
14	42	Control unit defective (checksum)	Restricted driving program	37 - 78
15	43	Control unit defective (relay)	Restricted driving program	37 - 79

Test point	Fault code	Title	Causes	Page
16	44	Control unit defective (watchdog)	Restricted driving program	37 - 79
17	45	Rpm limiter	Restricted driving program	37 - 79
18	46	Downshift protection	Restricted driving program	37 - 79
19	49	Control unit defective (EEPROM)	No reaction	37 - 79
20	51	Manual program switch	No manual program	37 - 80
21	53	Switch, kickdown	No kickdown	37 - 80
22	55	Speed signal (FR)	No manual program	37 - 80
23	56	Instrument cluster control	No reaction	37 - 81
24	59	Switch, R position	Restricted driving program	37 - 82
25	62	Speed signal (FL)	No manual program	37 - 82
26	63	Shiftlock P/N ground	No reaction	37 - 84
27	71	Gear monitoring 1st gear	No reaction	37 - 84
28	72	Gear monitoring 2nd gear	No reaction	37 - 84
29	73	Gear monitoring 3rd gear	No reaction	37 - 84
30	74	Gear monitoring 4th gear	No reaction	37 - 84

Fault, fault code	Possible causes, remedy, notes
Test point 1	
Control unit voltage (Fault code 11 Signal unplausible)	**Emergency operation, no display** Possible faults: Open circuit, short to positive, short to ground, loose contact, voltage outside of valid range 1) Tiptronic warning lamp does not light when ignition is switched off Check fuse No. 27 Measure voltage at fuse No voltage: Check wire to relay R11 or operation of relay Measure voltage at transmission control unit connector pin 55 No voltage: Check wiring according to wiring diagram 2) Voltage outside of valid range Fault code 11 Signal unplausible – Low voltage? U < 11V Check battery, alternator, regulator! – O.k.? Check for contact resistance at junctions, deformation and corrosion of contacts – Excessive voltage? Check power supply of vehicle (alternator, regulator) U > 14.5 V with engine running
Test point 2	**Tiptronic warning lamp comes on, transmission is in emergency mode**
Rpm signal from DME Fault code 21	Possible faults: Open circuit/short to ground, short to positive, loose contact 1) Signal check Check signal with Tester 9288. (Engine operation) Check signal with oscilloscope at transmission control unit connector pin 43. If signal o.k.: Transmission control unit faulty Signal shape

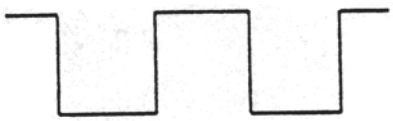

Fault, fault code	Possible causes, remedy, notes
	2) Open circuit, short to ground, short to positive Check wiring to wiring diagram. Check transmission control unit connector pin 43 to DME connector pin 6 for continuity, short to ground and short to positive. (Ground at transmission control unit = pin 28, positive at transmission control unit = pin 55) Connections o.k.: DME control unit faulty
Test point 3 **Load signal from DME** Fault code 22	**Tiptronic warning lamp comes on, transmission is in emergency mode** Possible faults: Open circuit, short to ground, short to positive, loose contact 1) Signal check Check signal with Tester 9288 (injection time) with engine running Check signal with oscilloscope at transmission control unit connector pin 35. If signal o.k.: Transmission control unit faulty Signal shape: ti signal

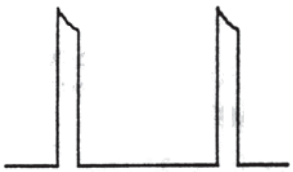

Test point 4 **Change of ignition timing** Fault code 24	**Tiptronic warning lamp comes on, transmission is in emergency mode** Possible faults: Open circuit, short to ground, short to positive 1) Check operation with Tester 9288 (drive link test) Idle speed must drop. If it does not, check as follows:

Fault, fault code	Possible causes, remedy, notes
	2) Check voltage drop – Remove cover of plugged-in connector X4/1 – Switch on ignition – Measure voltage at pin 7. Specification: approx. 5 Volt – Trigger signal with Tester. Voltage must drop – Operation o.k.: Check wiring to DME control unit (Connector X 4/1 pin 7 to DME control unit pin 51) – Wiring o.k.: DME control unit faulty – Operation not o.k.: Check wiring to transmission control unit (connector X4/1 pin 7 to transmission control unit connector pin 20) Wiring o.k.: Transmission control unit faulty Note: Check engine to body ground strap

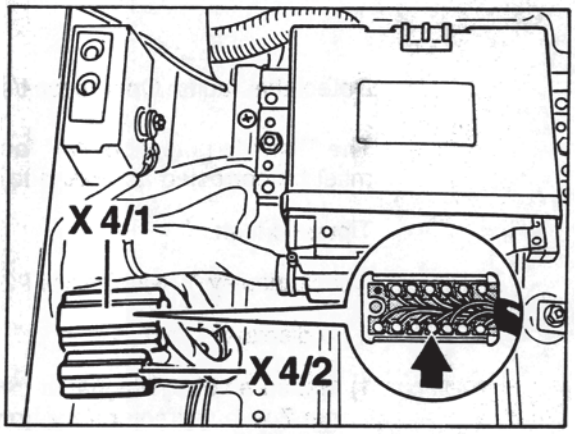

Connector X 4/1 (below left seat)

Fault, fault code	Possible causes, remedy, notes
Test point 5 **Throttle potentiometer** Fault code 25	**Tiptronic warning lamp comes on, transmission is in emergency mode**

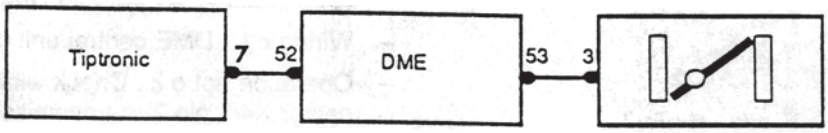

2377-37

Detectable faults: Open circuit/short to ground, short to positive

The "Throttle potentiometer" fault is also stored in the DME, the fault must be corrected according to the DME test plan.

Tiptronic test:

Check display % with Tester 9288 (Actual values menu)

If no display:

1) Measure voltage signal at transmission control unit connector pin 7 with voltmeter.Vary from 1 V at idle to approx. 10 V at full throttle (Ignition on)

If no voltage:

2) Check wiring according to wiring diagram.
   Check transmission control unit connector pin 7 to DME pin 52 for continuity, short to ground and short to positive (ground at transmission control unit connector = pin 28, positive at trans mission control unit connector = pin 55)

   If continuity o.k. = DME control unit faulty

   If voltage o.k. = Transmission control unit faulty

Fault, fault code	Possible causes, remedy, notes
Test point 6	**Tiptronic warning lamp comes on, transmission is in emergency mode**
Solenoid valve 1 Fault code 31	Possible faults: Open circuit, short to ground, short to positive 1) Check operation with Tester 9288 (Drive link test) – Acoustical test Triggering cycle of solenoids is audible as a clicking noise near the transmission 2) Pull connector off transmission control unit. a) Measure resistance between pin 30 and pin 53. Specification: 34 Ohms, tolerance 10 % b) Check that pins 30 and 53 are free from shorts to ground – Check o.k.: Transmission control unit faulty 3) Also pull off connector at transmission. Check wiring (transmission control unit connector pin 30 to transmission connector pin H and transmission control unit connector pin 53 to transmission connector pin M). 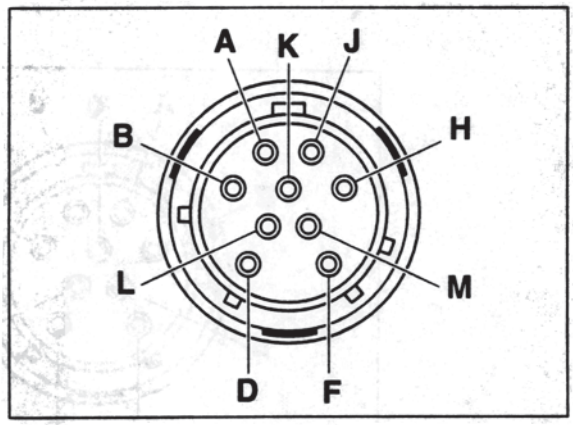 Wiring o.k.: Solenoid valve faulty Note: If a "sporadic solenoid fault" occurs, check connections for pushed-back pins.

Fault, fault code	Possible causes, remedy, notes
Test point 7 **Solenoid valve 2** Fault code 32	**Tiptronic warning lamp comes on, transmission is in emergency mode** Possible faults: Open circuit, short to ground, short to positive 1) Check operation with Tester 9288 (Drive link test) – Acoustical test Triggering cycle of solenoids is audible as a clicking noise near the transmission. 2) Pull off connector at transmission control unit a) Measure resistance between pin 33 and pin 53. Specification: 34 Ohms, tolerance 10 % b) Check that pins 33 and 53 are free from shorts to ground. Check o.k.: Transmission control unit faulty 3) Also pull off connector from transmission. Check wiring (transmission control unit connector pin 33 to transmission connector pin K and transmission control unit connector pin 53 to transmission connector pin M). 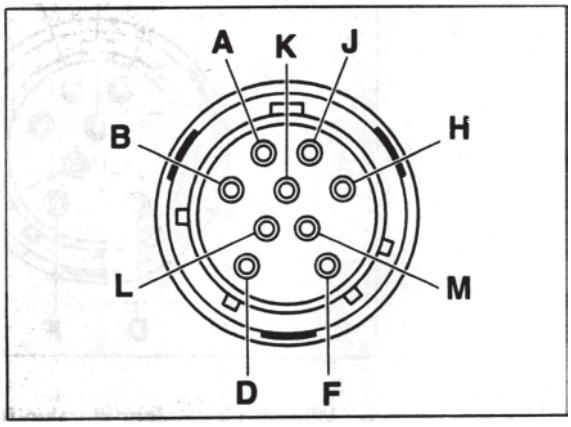 Wiring o.k.: Solenoid valve faulty

Fault, fault code	Possible causes, remedy, notes
Test point 8 **Solenoid valve torque conv. clutch** Fault code 33	**Tiptronic warning lamp comes on, transmission is in emergency mode** Possible faults: Open circuit, short to ground, short to positive 1) Check operation with Tester 9288 (Drive link test) Acoustical test Triggering cycle of solenoids is audible as a clicking noise near the transmission. 2) Pull off connector from transmission control unit a) Measure resistance between pin 32 and pin 53 Specification: 34 Ohms, tolerance 10 %. b) Check that pins 32 and 53 are free from shorts to ground Check o.k.: Transmission control unit faulty 3) Also pull off connector from transmission Check wiring (transmission control unit connector pin 32 to transmission connector pin L and transmission control unit connector pin 53 to transmission connector pin M)

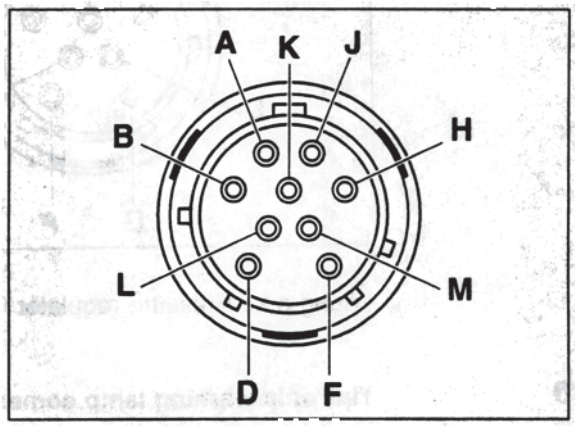

Wiring o.k.: Solenoid valve faulty

Fault, fault code	Possible causes, remedy, notes
Test point 12 **Pressure regulator** Fault code 34	**Tiptronic warning lamp comes on, transmission is in emergency mode** Possible faults: Open circuit, short to ground, short to positive 1) Pull off connector from transmission control unit a) Measure resistance between pin 5 and pin 53 Specification: 6 Ohms ± 2 Ohms b) Check that pins 5 and 53 are free from shorts to ground – Check o.k.: Transmission control unit faulty 2) Also pull off connector from transmission Check wiring (Transmission control unit connector pin 5 to transmission connector pin B and transmission control unit connector pin 53 to transmission connector pin M)

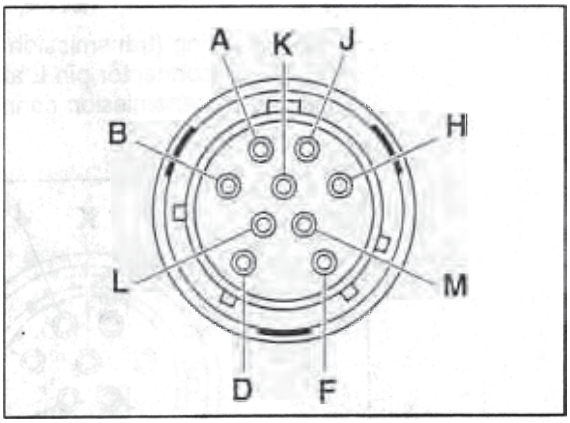

Wiring o.k.: Pressure regulator faulty

Test point 10 **Multi-function switch** Fault code 35	**Tiptronic warning lamp comes on, transmission is in emergency mode** Possible faults: Open circuit, short to ground, short to positive 1) Check operation with Tester 9288 Adjustment of Tester 9288: Menu: „Input signals“ = Selector lever/Manual program

Fault, fault code	Possible causes, remedy, notes

Shift through selector lever positions P, R, N, D, 3, 2, 1 one after another.

Compare: Selector lever position
Position indicator in speedometer
Position indicator on Tester 9288

Caution:

Due to its design, the display on Tester 9288 appears with a certain delay - shift through positions sufficiently slowly.

No matching: Check wiring according to wiring diagram, check position switch with/without wiring

2) Pull off transmission control unit connector

- Use ohmmeter to check transmission control unit connector pin 28 for ground
- If no ground is present, refer to wiring diagram MP IV

3) Measure position switch according to table 1

Ohmmeter display – = No continuity
0 = Continuity

Table 1

	Pin 8	Pin 37	Pin 36	Pin 9 → to ground
P	–	–	0	0
R	0	–	0	0
N	0	–	–	–
D	0	0	–	–
3	0	0	0	–
2	–	0	0	–
1	–	0	–	

Measurements o.k.: Control unit faulty

Measurements present, but incorrect sequence?

Check cable from selector lever switch to position switch

Is cable adjusted correctly?

Repair instructions: „Adjust position switch“

Open circuit, short to ground, short to positive?

Fault, fault code	Possible causes, remedy, notes

4) Check position switch without connections
- Pull connector off the switch
- Check switch for continuity acc. to Table 2

Ohmmeter display — = No continuity
0 = Continuity

Table 2

	Pin H-B	H-C	H-A	F-G	E-D
P	–	–	0	0	0
R	0	–	0	–	0
N	0	–	–	0	–
D	0	0	–	–	–
3	0	0	0	–	–
2	–	0	0	–	–
1	–	0	–	–	–

- Fault? Replace Multi-function switch.

Test point 11

Speed sensor (Transmission)

The sensor transmits the transmission speed. The transmission control unit compares it to the wheel speed.

Fault code 36

Tiptronic warning lamp comes on, transmission is in emergency mode

Possible faults: Open circuit, short to ground, short to positive, loose contact

Note:

Check with Tester 9288 (Actual values). Store fault as of engine speed = 2,800 rpm

1) Pull off connector from transmission control unit

a) Measure resistance between pin 14 and pin 42.
Specification: approx. 350 Ohms

b) Check that pin 14 and pin 42 are free from shorts to ground.

Check o.k.: Transmission control unit faulty

Fault, fault code	Possible causes, remedy, notes

2) Also pull connector off the transmission.

Check continuity: Transmission control unit connector pin 14 to pin F

Pin 42 to pin A

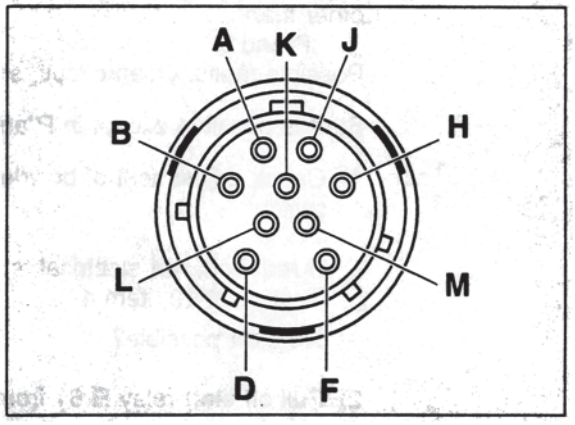

Short to ground from pin 14 and pin 42 to pin 28 (ground)

Pin 14 and pin 42 to pin 15 (screening)

Short to positive from pin 14 and pin 42 to pin 55 (positive)

Test point 12

Transmission temperature sensor

Fault code 37

If a fault occurs, a replacement value 60° C is assumed.

Possible faults: Open circuit, short to ground, short to positive, corrupted signal

Note:

Existing faults are stored only when the engine is running.

1) Check temperature with Tester 9288 (Actual values)

2) Pull off connector from transmission control unit

Measure resistance between pin 21 and pin 22

Specification: approx. 1,00 kΩ/20° C
1,15 kΩ/40° C
1,30 kΩ/60° C

Check wiring.

Check o.k.: Transmission control unit faulty

Fault, fault code	Possible causes, remedy, notes
Test point 13 **Multi-function switch (start)** Fault code 38	**Tiptronic warning lamp comes on, transmission is in emergency mode** Specification: Engine can be started in P or N positions only Actual status: Engine can also be started in selector lever positions other than P and N Possible faults: Open circuit, short to ground, short to positive Start is possible except in P and N 1) Check adjustment of bowden cable to position switch If required, run electrical tst as described under Test point 10, item 4 No start possible? 2) Pull off start relay R 61 from Central Electrical System – Ground must be present at relay base terminal 85 when the selector lever is set to P and N. – Ground is present: Check start relay and ignition switch with related wiring – No ground: Check position switch and wiring to start relay 3) Check position switch as described under Test point 10, item 4 Position switch o.k. Check continuity: a) Position switch pin G to start relay R61. b) Junction X4/1 pin 6 to DME connector pin 42 Wiring o.k. Transmission-related starting requirements are met.
Test point 14 **Control unit faulty** (Checksum) Fault code 42	**Tiptronic warning lamp comes on, transmission is in emergency mode** Replace control unit

Fault, fault code	Possible causes, remedy, notes
Test point 15 **Control unit faulty** (Relais) Fault code 43	**Tiptronic warning lamp comes on, transmission is in emergency mode** Replace control unit
Test point 16 **Control unit faulty** (Watchdog) Fault code 44	**Tiptronic warning lamp comes on, transmission is in emergency mode** Replace control unit
Test point 17 **Downshift fault** Fault code 45	**Tiptronic rning lamp comes on, transmission is in emergency mode** Possible faults: Corrupted rpm signal from output or engine, or incorrect output/engine rpm ratio Faulty transmission (Clutch slips) 1) Check inductive rpm sensor, Test point 11 2) Check transmission
Test point 18 Rev.-limiter Fault code 46	**Tiptronic warning lamp comes on, transmission is in emergency mode** Faulty transmission (Clutch slips) 1) Check inductive rpm sensor, Test point 11 2) Check transmission
Test point 19 **Control unit faulty (EEPROM)** Fault code 49	**Replace control unit**

Fault, fault code	Possible causes, remedy, notes
Test point 20 **Manual program switch** Fault code 51	**No manual program available** Detectable faults: Short to ground 1) Check operation with Tester 9288 (Input signals) 2) Pull off connector from transmission control unit Check connection from transmission control unit connector pin 13 to selector lever switch/pin 3 Connection o.k. Replace selector lever switch plate Switch and connection o.k.: Transmission control unit faulty
Test point 21 **Kick-down switch** Fault code 53	**No kickdown shift** Detectable faults: Short to ground 1a) Acoustical switch test b) Check operation with Tester 9288 (Input signals test) 2) Remove and check kickdown switch (Note: Adjust switch after replacement) 3) Pull off connector from transmission control unit. Check connection from transmission control unit connector pin 18 to kickdown switch pin 2. Check o.k.: Transmission control unit faulty
Test point 22 **Speed signal (FR)** Fault code 55	**Upshifting is not prevented, no manual program** Detectable faults: Open circuit/short to ground/short to positive 1) Signal comes from ABS. ABS o.k.? 2) Check signal with Tester 9288, raising the vehicle and rotating right-hand front wheel manually.

Fault, fault code	Possible causes, remedy, notes

3) Check wiring according to wiring diagram

Check continuity: Pin 39/transmission control unit connector to ABS control unit connector pin 42

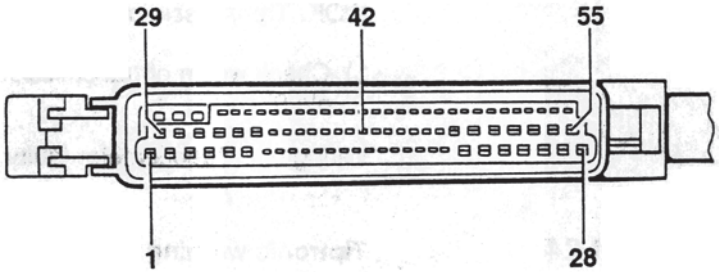

Short to ground: Pin 39 to pin 28/transmission control unit connector (ground)

Short to positive: Pin 39 to pin 55/transmission control unit connector (positive)

4) Check signal with oscilloscope (transmission control unit connector pin 38) (ignition on)

Speed signal

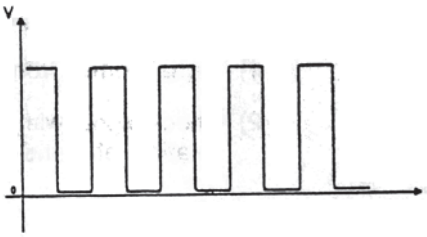

Signal present: Transmission control unit faulty

No signal: ABS faulty

Test point 23

Instrument cluster

Activation

Fault code 56

No diagnosis possible.

Detectable faults: Open circuit/short to ground, short to positive

1) Switch the manual program on and off with the engine running.

The position display "D" must go out when the manual range is engaged.

Fault, fault code	Possible causes, remedy, notes
	2) Pull off the transmission control unit connector and connect pin 51 to ground. The position display/automatic mode must go out when the engine is not running. If OK: Transmissio control unit connector is defective. 3) Check wiring of transmission control unit pin 51 to speedometer pin 9. Wiring o.k. Speedometer faulty
Test point 24 **R-position switch** Fault code 59	**Tiptronic warning lamp comes on, transmission is in emergency mode** Possible faults: Open circuit, short to ground, signal unplausible 1) Ground must be present at pin 9 when selector lever switch is in position P, R (N is is possible due to overlaps). No ground: Check wiring from transmission control unit connector pin 41 to position switch connector D. Wiring o.k. Check position switch as under Test point 10 item 4
Test point 25 **Speed signal 1 of ABS** (front left-hand) Fault code 62	**Upshifting is not prevented, no manual program** Detectable faults: Open circuit/short to ground/short to positive 1) Signal comes from ABS. ABS o.k.? 2) Check signal with Tester 9288, raising the vehicle and rotating left-hand front wheel manually.

Fault, fault code	Possible causes, remedy, notes
	3) Check wiring according to wiring diagram Check continuity: Pin 40/transmission control unit connector to ABS control unit connector pin 9

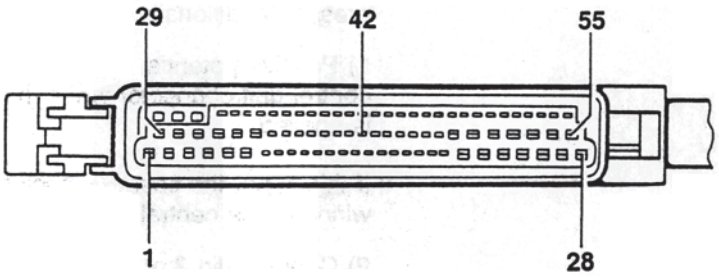

Short to ground: Pin 40 to pin 28/transmission control unit connector (ground)

Short to positive: Pin 40 to pin 55/transmission control unit connector (positive)

4) Check signal with oscilloscope (transmission control unit connector pin 40) (ignition on)

Speed signal

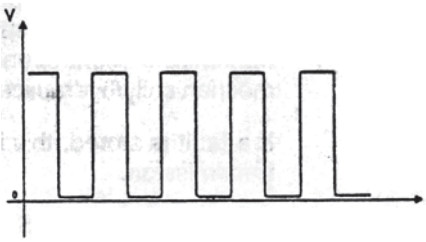

Signal present: Transmission control unit faulty

No signal: ABS faulty

Fault, DTC	Possible causes, remedy, notes
Test point 26 **Shiftlock P/N** Fault code 63	**Fault possibilities: Discontinuity, short circuit to ground, short circuit to plus** **Note** When the ignition is switched on, a drive position can be selected from selector lever position P or N only when the brake pedal is pressed additionally. 1) Positive potential must be present at pin 10 of the transmission control unit connector when the ignition is switched on and the brake is applied. If this is not the case = Check fuse 19, brake light switch and the wiring of the central electric system. 2) Connect pin 2 of the transmission control unit connector to ground. The solenoid should operate (the activating pulse can be heard near the selector lever operating mechanism). If this is not the case = Check fuse 27 and wiring in accordance with the wiring diagram If fuse 27 and wiring are OK = Solenoid defective. 3) If points 1 and 2 are OK = Control unit defective.
Test point 27/28/29/30 **Gear monitoring** **1st ... 4th gear** Fault code 71 ... 74	**Fault possibility: Signal implausible** **Note** The gear monitoring function for 1st ... 4th gear monitors the ratio of engine speed/output speed. In the event of setpoint deviations, the transmission control unit detects whether shifting was performed mechanically/hydraulically. If a fault is stored, this indicates a mechanical/hydraulic fault in the transmission. 1) Is Fault code 36 (Speed sensor) stored? If yes = Remedy the fault in accordance with test point 11. 2) If Fault code 36 is **not** stored = Check transmission

45 02 Diagnosis / Troubleshooting Anti-Lock System

Diagnosis / Troubleshooting

Anti-Lock System

System ABS 5 and System ABS 5 / ABD

Contents

	Page
ABS 5	
Important information	45 - 3
System description	45 - 4
Component layout	45 - 8
Function of individual components	45 - 9
Tools	45 - 11
Control unit connector pin assignment	45 - 12
ABS 5 menus (Overview of available menus)	45 - 14
Fault memory (Overview of available fault displays)	45 - 15
Fault overview / Troubleshooting (Diagnostics / Test plan)	45 - 17
Drive links (Drive links diagnostics and test plan)	45 - 34
Actual values (Actual values check)	45 - 37
Static test	45 - 39
System check	45 - 40
ABS 5 / ABD	
Important information	45 - 3
System description	45 - 6
Component layout	45 - 8
Function of individual components	45 - 9
Tools	45 - 11
Control unit connector pin assignment	45 - 12
ABS 5 / ABD menus (Overview of available menus)	45 - 14
Fault memory (Overview of available fault displays)	45 - 15
Fault overview / Troubleshooting (Diagnostics / Test plan)	45 - 17
Drive links (Drive link diagnostics and test plan)	45 - 34
Actual values (Actual values check)	45 - 37
Static test	45 - 39
System check	45 - 40
Bleeding	45 - 45

Important information on ABS 5 and ABS 5 / ABD

General

The Porsche 911 Carrera (993) is available as standard with ABS 5 (5th generation) or, on option (M No.) with ABS 5 / ABD.
ABD = **A**utomatic **B**rake **D**ifferential.

System Tester 9288 is used for diagnostic operations and system testing of **both** systems.

The pulse wheels on the front axle (tensioning discs) and the pulse rings on the rear axle have a total of 48 teeth. The versions on the 911 Carrera 2/4 (964) had 45 teeth. This difference should
be observed when ordering spare parts to avoid confusion.

The brake pipes on the hydraulic unit and on the adapter have different threads (M 12 x 1 and M 10 x 1).
The risk of accidentally interchanging the brake pipes is thus avoided or reduced considerably.
The adapter is located on the left-hand upper spare wheel well.

Differences between ABS 5 and ABS 5 / ABD

ABS 5 = **3-channel system**
(For schematic diagram, see system description on page 45 - 5).

ABS 5 / ABD = **4-channel system**
(For schematic diagram, see system description on page 45 - 7).

The major **differences** between ABS 5 and ABS 5 / ABD **are:**

- Proportioning valve on hydraulic unit:
  ABS 5 = **1** ea.
  ABS 5 / ABD = **2** ea.
- Number of brake pipes connected to adapter (in upper left area of spare wheel well):
  ABS 5 = **3** brake pipes.
  ABS 5 / ABD = **4** brake pipes.
- **ABD** warning lamp and **ABD** operation lamp (information lamp) of vehicles fitted with **ABS 5 / ABD**. These lamps come on when the ignition is switched on (lamp monitor).
  Those lamps are **not used** in the instrument cluster of vehicles fitted with **ABS 5.**

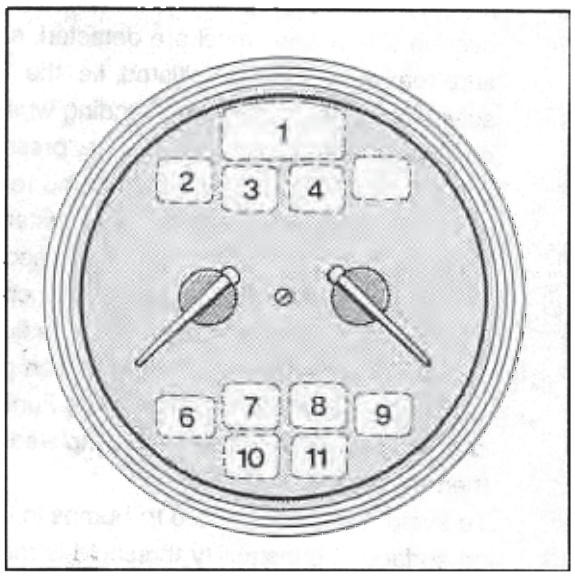

2 - ABD information lamp
3 - ABD warning lamp

ABS 5 system description (3-channel system)

Note

Operation, installation space requirements and weight of the ABS 5 have been optimized over the ABS 2 system. For a schematic diagram of ABS 5, refer to page 45 - 5.

ABS operation

The ABS control unit receives the stop light switch signal and the AC signals supplied by four speed sensors. Two microprocessors then convert these signals independently into corresponding digital wheel speed signals. The wheel speed signals are used to calculate wheel slip (nearly proportional to the calculated vehicle reference speed).

If both a vehicle deceleration condition and excessive slip at one wheel are detected, a pressure retaining period is initiated, i.e. the inlet solenoid valve on the corresponding wheel is closed in order to avoid any further pressure buildup. If the wheel continues to tend to lock even though the pressure is held constant, the pressure in the wheel cylinder is reduced. For this purpose, the outlet solenoid valve opens and the return pump returns the brake fluid to the master cylinder (pressure reduction phase) until the wheel starts rotating again. Further cycles adapted to the cycle just completed are then initiated.
To avoid faulty control due to bumps in the road surface, the instability threshold is made more insensitive as a function of the road surface condition.

This control design offers the following advantages over the ABS 2 generation:

- Reduced braking distance when braking on uneven road surfaces
- Improved control quality, felt by driver as equal deceleration during ABS braking operations
- Improved pedal feedback comfort thanks to finer tuning of pressure pulse control.

This function, i.e. the input signals, is constantly monitored. If a fault is detected, the control unit switches the ABS feature off, activates the ABS warning lamp and stores the fault in a non-volatile memory in the control unit.
As an additional measure, a test program is invoked whenever a speed of 6 km/h is exceeded after starting the vehicle. This program triggers the solenoids and the pump motor electrically and checks them. If a fault is detected, the control unit switches off the ABS function, the ABS warning lamp lights up and the fault is stored.

For a functional description of the individual components, see page 45 - 9

Schematic diagram - ABS 5

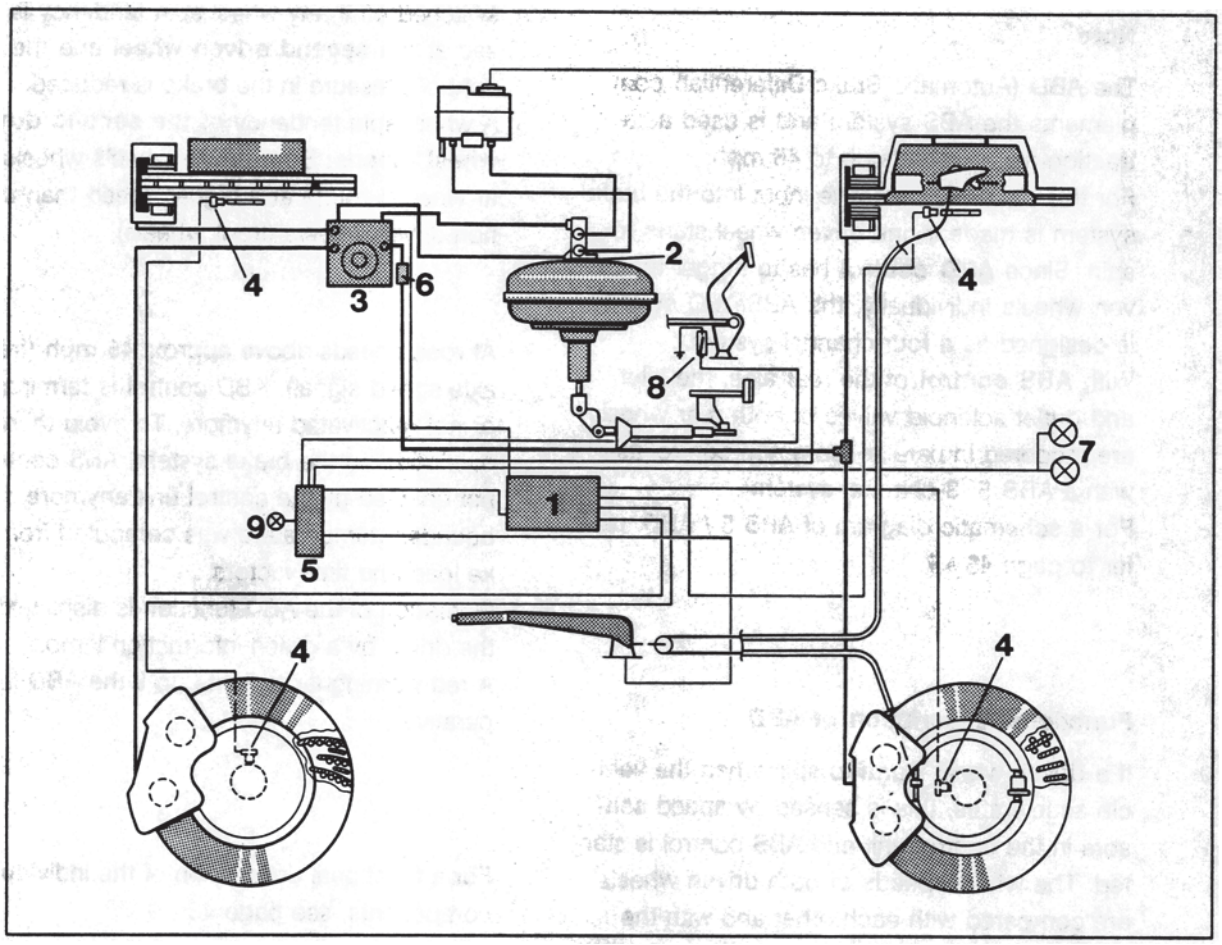

153

1 - ABS control unit

2 - Tandem brake master cylinder

3 - ABS hydraulic unit
(**3** hydraulic outputs)

4 - ABS sensors

5 - Central Information System

6 - Proportioning valve (**1x**)

7 - Brake light

8 - Stop light switch

9 - ABS warning lamp

System description ABS 5 / ABD (4-channel system)

Note

The ABD (Automatic Brake Differential) complements the ABS system and is used as a traction aid at speeds up to 45 mph.
For this purpose, an active input into the brake system is made if one driven wheel starts to spin. Since **ABD control** has to trigger the driven wheels individually, the ABS/ABD system is designed as a four-channel system.
With **ABS control** of the rear axle, the inlet and outlet solenoid valves of both rear wheels are triggered in parallel (common control as with a ABS 5 3-channel system).
For a schematic diagram of ABS 5 / ABD, refer to page 45 - 7.

Functional description of ABD

If a driven wheel starts to spin when the vehicle accelerates, this is sensed by speed sensors in the control unit and ABS control is started. The wheel speeds of both driven wheels are compared with each other and with the speeds of the non-driven wheels. If a specified wheel speed difference is exceeded, a brake pressure is built up at the spinning wheel. Adding residual drive torque and braking torque thus allows the wheel that does not spin to transmit a higher drive torque.

To ensure driving stability, the ABD system is switched off if any wheel spin tendency is sensed at **the second driven wheel** and the ABD control pressure in the brake is reduced.
A wheel spin tendency **of the second driven wheel means:** Both driven wheels wheels (rear wheels) rotate at a higher speed than the non-driven wheels (front wheels).

At road speeds above approx. 45 mph (front-axle speed signal), ABD control is terminated or not reactivated anymore. To avoid thermal overloads on the brake system, ABS control is not enabled by the control unit anymore if a boundary temperature was computed from brake load and time factors.
Operation of the ABD function is displayed to the driver by a green information lamp.
A red warning lamp lights up if the ABD is inoperative.

For a functional description of the individual components, see page 45 - 9

Schematic diagram - ABS 5 / ABD

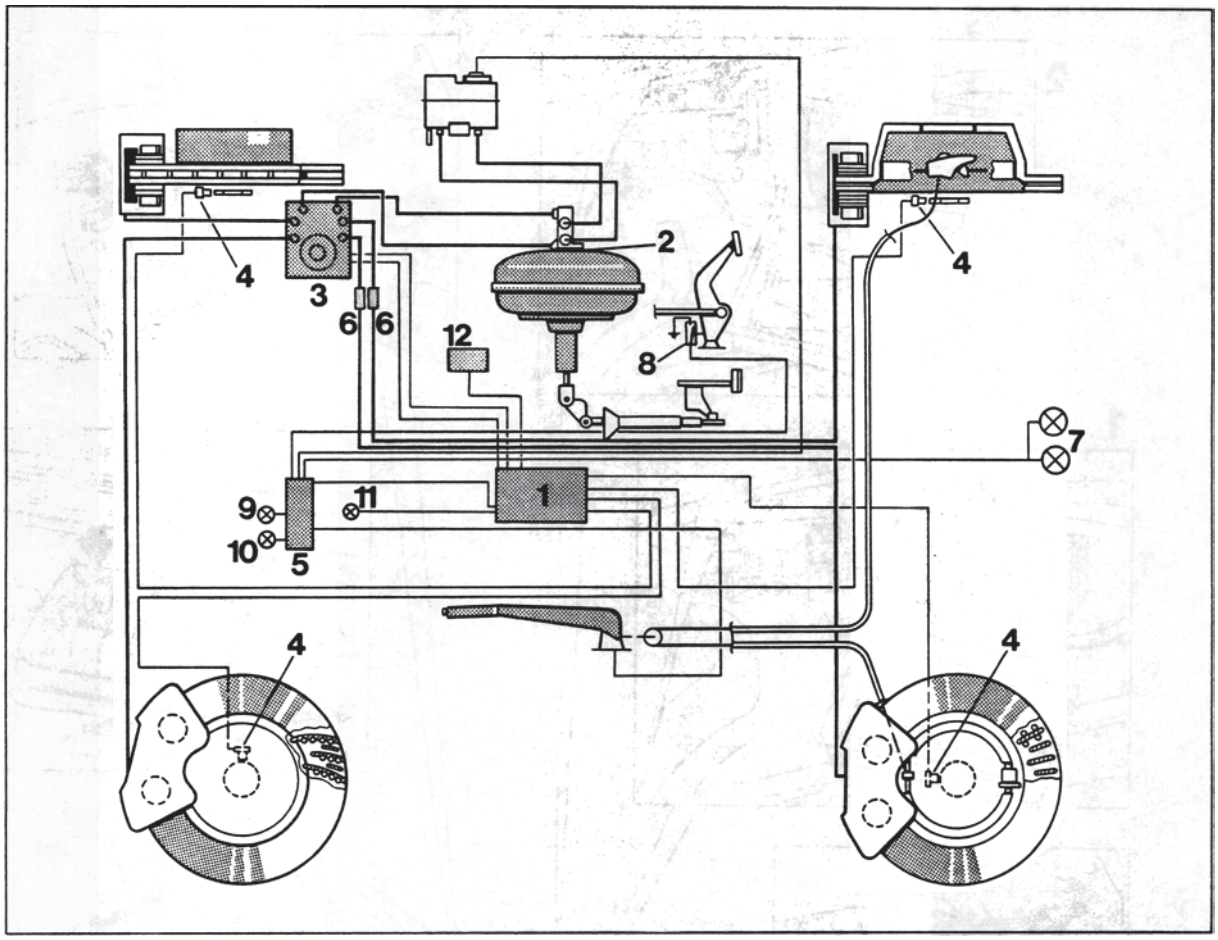

154

- **ABS/ABD** control unit

2 - Tandem brake master cylinder

3 - **ABS/ABD** hydraulic unit (**4** hydraulic outputs)

4 - ABS sensors

5 - Central Information System

6 - Proportioning valve (**2x**)

7 - Brake light

8 - Stop light switch

9 - ABS warning lamp

10 - **ABD warning lamp**

11 - **ABD operation lamp**

12 - **DME control unit**

Component layout (ABS 5 and ABS 5 / ABD)

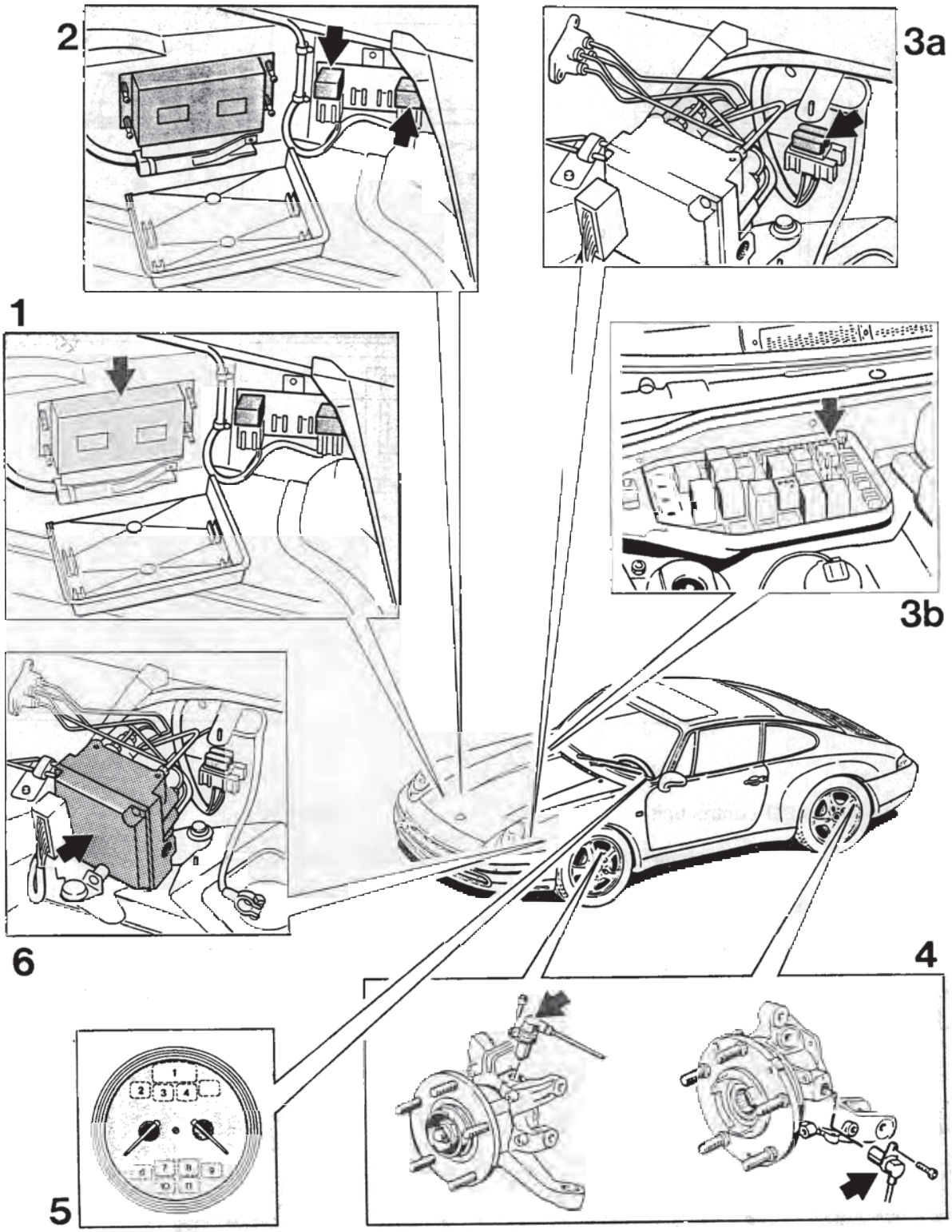

Function of individual components

1. Control unit (ABS 5 and ABS 5 / ABD)

Processes the incoming signals and triggers the solenoid vales and/or the return pump of the hydraulic unit if wheel slip is excessive (also refer to system description).
Switches ABS or ABS/ABD off if a system fault is detected, activates the warning lamp and stores the fault in a non-volatile memory.

Note

The control units are identified by their Part Nos. and by a self-adhesive sticker with a color edge.
ABS 5 - Sticker with **black** edge.
ABS 5 / ABD **to end of MY '94** - Sticker with **yellow** edge.
ABS 5 / ABD **from MY '95** (Rear-wheel drive and four-wheel drive models) - Sticker with **red** edge.

To keep the plugging cycles of the control unit connector to the minimum possible, the control unit was located in a suitable position.

2. Relays

The solenoid relay (R68) is triggered (closed) by the control unit as soon as the control unit is supplied with voltage from the alternator (D+ / terminal 61).
If the relay has closed (picked up), positive (+) battery voltage (terminal 30) is available at the coils of all solenoids (in the hydraulic unit).

As soon as the ABS or ABD starts the regulating cycle, the control unit connects the corresponding solenoid coil of the solenoid to be controlled on the respective wheel to negative.

The return pump relay (R65) is triggered by the control unit (negative) if a return feed operation is required and is then closed.
When the relay has closed (picked up), battery + (terminal 30) is present at the return pump, causing the pump to run.

Note

Both relays are identical 50 A power relays.
The R 65 and R 68 identifications are indicated on the power relay **cover**.
R 68 is the rearmost relay (further away from the control unit than relay R 65).
To remove the relay cover, remove the relay bracket, pushing put the (center) body-bound rivet.

3. Fuses

3a. The 60 A Maxifuse (arrow) is used to protect the return pump and the solenoids.

Note

The second 60 A Maxifuse is used to protect the DME.

3b. The 15 Amp fuse (Nr. 16) on the Central Electrical Systme protects the control unit power supply (ABS 5 and ABS 5 / ABD).

4. Speed sensor

The speed sensors (rpm sensors) supply wheel speed information (speed information for each individual wheel) to the control unit. The Speed sensors operate according to the inductive principle and, corresponding to the number of teeth of a pulse wheel, generate sinusoidal alternating voltages, the frequency of which is an indicator of the wheel speed.

Note

The front and rear speed sensors are **different**.
Identification: Part No. on speed sensor wire and position of mounting hole relative to the edge position (see page 45-23).

5. Warning and information lamps

System readiness display (warning lamps).

Fault display (warning lamps).

Control display (ABD information lamp).

Note

No. 7 (Page 45-8) = ABS warning lamp
No. 3 (Page 45-8) = ABD warning lamp
No. 2 (Page 45-8) = ABD information lamp

6. Hydraulic unit

The main components of the hydraulic unit consist essentially of several fast-switching solenoids and a return pump. Regardless of the pressure in the brake master cylinder, the hydraulic unit can modify the fluid pressure to the wheel cylinders (pressure holding or pressure reduction). It is not possible, however, to increase the pressure beyond the pressure applied by the master cylinder.

The ABS 5 hydraulic unit has
3 hydraulic outputs (3-channel system) and 6 solenoid valves (3 inlet and 3 outlet solenoids).

The ABS 5 / ABD hydraulic unit has
4 hydraulic outputs (4-channel system) and 10 solenoid valves (4 inlet solenoids / 4 outlet solenoids as well as 1 switch-over and 1 intake solenoid).
The intake and switch-over solenoids are required to allow the return pump to perform two duties:

I. Return feed to brake master cylinder (pressure release) for ABS control.
II. Supply feed (presure buildup) to right or left rear wheel brake cylinder with **ABD control.**

Tools

1. System Tester 9288 with adapter lead 9288/1 and corresponding module (language-dependent), **as of** Version 5.0, 1993.

2. Standard digital multimeter.

3. When performing measurements with the multimeter, use auxiliary leads (shop-made) on control unit connector in order not to damage the connector contacts in the control unit connector.
   Standard pins : Fit 2 spade terminals N 17 457 2 to 1 or 2 auxiliary leads.
   Mini pins : Fit suitable spade terminals (to be released shortly) to 1 or 2 auxiliary leads.

Control unit connector pin assignment (ABS 5 and ABS 5 / ABD)

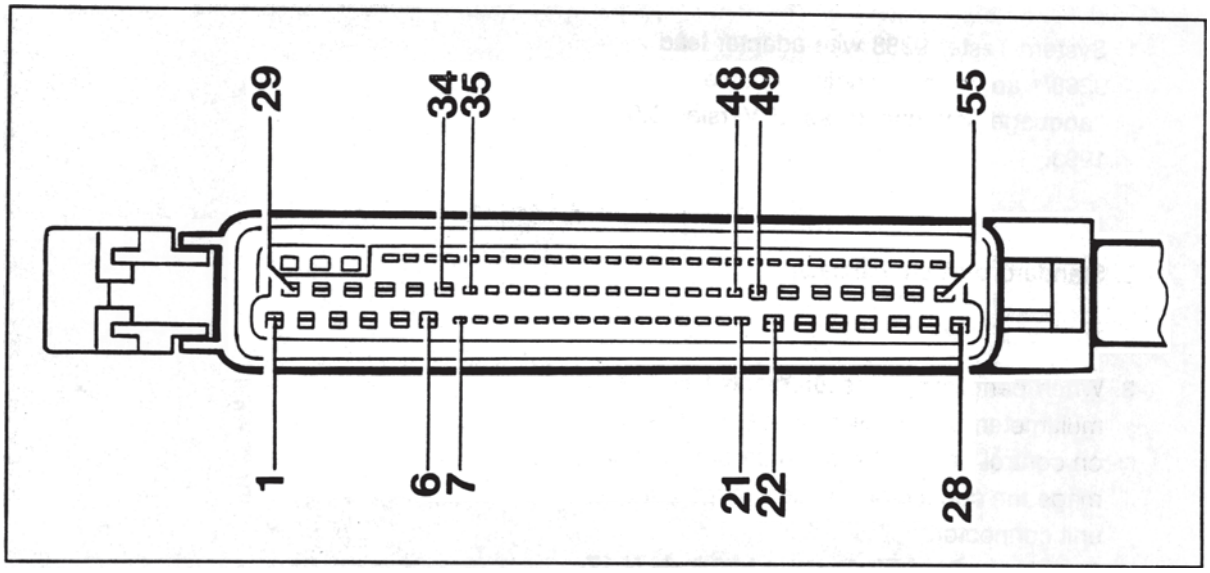

1 - Control unit voltage supply (Terminal 15 / from fuse No. 16)

2 - Voltage for return pump relay and valve relay

3 - With solo ABS = Not used

3 - With ABS / ABD = Switchover solenoid triggering (ground)

4 - With solo ABS =Not used

4 - With ABS / ABD = Intake solenoid triggering (ground)

5 - Triggering of front left inlet valve (ground)

6 - With solo ABS = Not used

6 - With ABS / ABD =Triggering of rear right inlet solenoid valve (ground)

7 - Return pump relay triggering (ground)

8 - Not used

9 - **Up to MY '95 = Not used** with Tiptronic vehicles **as of MY '96** = Output signal (Front left rpm sensor) **to** Tiptronic control unit

10 - Front left speed sensor ground

11 - Signal from rear right speed sensor

12 - Rear left speed sensor ground

13 - With solo ABS = Output signal (Rear left speed sensor) to Central Information System (speedometer signal)

13 - With ABS / ABD = Signal from rear left speed sensor

14 - Front right speed sensor ground

15 - Signal from front right speed sensor

16 - L wire from diagnosis

17 - 18 Not used

19 - Engine monitor (Return pump)

20 - 23 Not used

24 - D+ , terminal 61

25 - With solo ABS = Triggering of rear axle outlet solenoid (ground)

25 - With ABS / ABD = Triggering of rear left outlet solenoid (ground)

26 - Triggering of front right outlet solenoid (ground)

27 - Not used

28 - Ground

29 - Ground

30 - Triggering of ABS warning lamp (ground)

31 - With solo ABS = Not used

31 - With ABS / ABD = Triggering of ABD warning lamp (ground)

32 - With solo ABS = Not used

32 - With ABS / ABD = Triggering of ABD information lamp (ground)

33 - Triggering of front left outlet solenoid (ground)

34 - With solo ABS = Not used

34 - With ABS / ABD = Triggering of rear right outlet solenoid (ground)

35 - With **ABS / ABD as of MY '95 (RWD and 4WD) =** Signal from front left speed sensor

36 - With **ABS / ABD up to end of MY '94 =** Signal from front left speed sensor

36 - With **solo ABS =** Signal from front left speed sensor

37 - Solenoid relay triggering (ground)

38 - Rear right speed sensor ground

39 - Not used

40 - With solo ABS = Signal from rear left speed sensor

40 - With ABS / ABD = Output signal (rear left speed sensor) to Central Information System (speedometer signal)

41 - Not used

42 - With manual transmission vehicles = Not used

42 - With Tiptronic vehicles = Output signal (front right speed sensor) **to** Tiptronic control unit

43 - 45 Not used

46 - Diagnosis K wire

47 - With solo ABS = Not used

47 - With ABS / ABD = Throttle information signal **from** DME control unit. Required for ABD control

48 - Stop light switch signal (system voltage when brakes are actuated)

49 - 52 Not used

53 - With solo ABS = Triggering of rear-axle inlet solenoid (ground)

53 - With ABS / ABD = Triggering of rear left inlet solenoid (ground)

54 - Triggering of front right inlet solenoid (ground)

55 - Not used

ABS 5 and ABS 5 / ABD Menus

Overview of available menus

1 = Fault memory

2 = Drive links

3 = Actual values

1 = Static test

2 = System check

3 = Bleed

Note

ABS 5 has only 5 menus.
3 = Bleed does not exist since this system has no ABD circuit.

Fault memory:	see page 45 - 15
Drive links:	see page 45 - 34
Actual values:	see page 45 - 37
Static test:	see page 45 - 39
System check:	see page 45 - 40
Bleed:	see page 45 - 45

Fault memory

Overview of available fault displays of ABS 5 and ABS 5 / ABD

Note

If no explanatory note is given on the below fault displays, the displays apply both to ABS 5 (solo ABS) and ABS 5 / ABD.

	Fault code
§§: Control unit faulty	11
§§: Stop light switch §§§§§§§§§§§§§§§§§§§§§§§	12
§§: Incorrect gearwheel §§§§§§§§§§§§§§§§§§§§§§§	13
§§: Intake valve §§§§§§§§§§§§§§§§§§§§§§§	14 (only with ABD)
§§: Switch-over valve §§§§§§§§§§§§§§§§§§§§§§§	15 (only with ABD)
§§: Throttle information §§§§§§§§§§§§§§§§§§§§§§§	17 (only with ABD)
§§: Speed sensor front left Signal unplausible §§§§§§§§§§§§§§§§§§§§§§§	21

	Fault code
§§: Speed sensor front right Signal unplausible §§§§§§§§§§§§§§§§§§§§§§§	22
§§: Speed sensor rear right Signal unplausible §§§§§§§§§§§§§§§§§§§§§§§	23
§§: Speed sensor rear left Signal unplausible §§§§§§§§§§§§§§§§§§§§§§§	24
§§: Speed sensor front left Op.circ./GND/+ short §§§§§§§§§§§§§§§§§§§§§§§	25
§§: Speed sensor front right Op.circ./GND/+ short. §§§§§§§§§§§§§§§§§§§§§§§	26
§§: Speed sensor rear right Op.circ./GND/+ short §§§§§§§§§§§§§§§§§§§§§§§	27
§§: Speed sensor rear left Op.circ./GND/+ short §§§§§§§§§§§§§§§§§§§§§§§	28

	Fault code
§§: ABS valve Inlet FL Op.circ./GND/+ short §§§§§§§§§§§§§§§§§§§§§§§§	31
§§: ABS valve Inlet FR Op.circ./GND/+ short §§§§§§§§§§§§§§§§§§§§§§§§	32
§§: ABS valve Inlet rear Op.circ./GND/+ short §§§§§§§§§§§§§§§§§§§§§§§§	33 (only with solo ABS)
§§: ABS valve Inlet RL Op.circ./GND/+ short §§§§§§§§§§§§§§§§§§§§§§§§	33 (nur mit ABD)
§§: ABS valve Inlet RR Op.circ./GND/+ short §§§§§§§§§§§§§§§§§§§§§§§§	34 (only with ABD)
§§: ABS valve Exhaust FL Op.circ./GND/+ short §§§§§§§§§§§§§§§§§§§§§§§§	35
§§: ABS valve Exhaust FR Op.circ./GND/+ short §§§§§§§§§§§§§§§§§§§§§§§§	36

	Fault code
§§: ABS valve Exhaust rear Op.circ./GND/+ short §§§§§§§§§§§§§§§§§§§§§§§§	37 (only with solo ABS)
§§: ABS valve Exhaust RL Op.circ./GND/+ short §§§§§§§§§§§§§§§§§§§§§§§§	37 (only with ABD)
§§: ABS valve Exhaust RR Op.circ./GND/+ short §§§§§§§§§§§§§§§§§§§§§§§§	38 (only with ABD)
§§: Valve relay Op.circ./GND/+ short §§§§§§§§§§§§§§§§§§§§§§§§	39
§§: Return pump Op.circ./GND/+ short §§§§§§§§§§§§§§§§§§§§§§§§	40

Fault overview / Troubleshooting (Diagnostics / Test plan)

Test point	Fault code	Fault display (Abbreviated fault text)	Page
	11	Control unit faults	
2	12	Stop light switch	
3	13	Incorrect gearwheel	45 - 20
4*	14*	Intake valve	45 - 21
5*	15*	Switch-over valve	45 - 21
6*	17*	TP information	45 - 21
7	21	Speed sensor front left (Signal unplausible)	45 - 22
8	22	Speed sensor front right (Signal unplausible)	45 - 24
9	23	Speed sensor rear right (Signal unplausible)	45 - 24
10	24	Speed sensor rear left (Signal unplausible)	45 - 24
11	25	Speed sensor front left***	45 - 24
12	26	Speed sensor front right***	45 - 25
13	27	Speed sensor rear right***	45 - 25
14	28	Speed sensor rear left***	45 - 25
15	31	ABS valve Inlet front left	45 - 26
16	32	ABS valve Inlet front right	45 - 27
17**	33**	ABS valve Inlet rear or rear left on ABD vehicles	45 - 27
18*	34*	ABS valve Inlet rear right	45 - 28
19	35	ABS valve Exhaust front left	45 - 28
20	36	ABS valve Exhaust front right	45 - 28
21**	37**	ABS valve Exhaust rear or rear left on ABD vehicles	45 - 28
22*	38*	ABS valve Exhaust rear right	45 - 29
23	39	Valve relay	45 - 29
24	40	Return pump	45 - 32

* Only for vehicles with ABD

** Fault text on vehicles with ABD differs from text for solo ABS

*** Open circuit / short to ground / short to positive

Notes on Fault memory / Troubleshooting

Caution: The ABS or ABD warning lamp may in certain cases light up even if no fault is stored in the fault memory.
In this case, the following faults may be present:

Mechanical switch contacts (3 contacts fitted / see arrows) in control unit connector may be bent. This shorts the contacts to ground.
Explanation: Normally those contacts are grounded only when the connector is pulled off. This causes the ABS or ABD warning lamp, respectively, to be activated when the ignition is switched on.

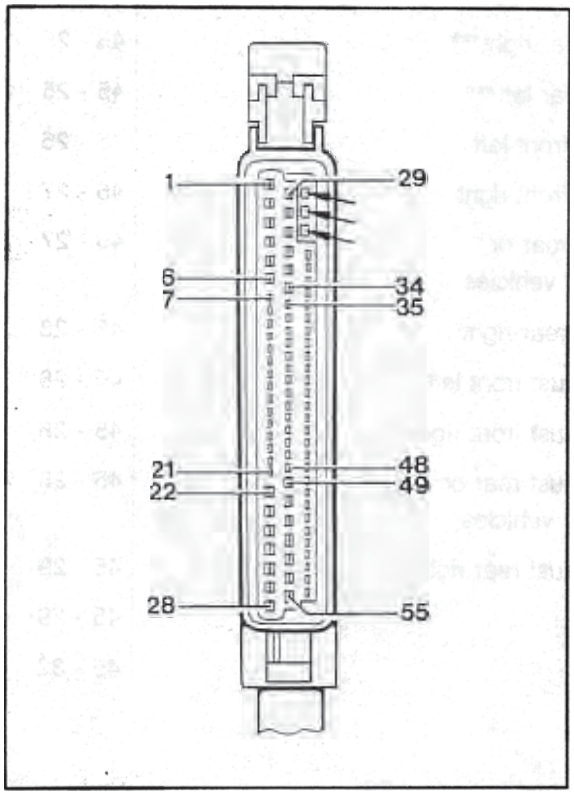

The "Terminal 61" signal is missing at the control unit when the engine is running. This can be checked on the Actual values menu using System Tester 9288 (see page 45 - 37/38).

Control unit power supply
(PIN 1) below 9.5 Volt (low voltage).

Important notes

After a fault in the anti-lock system has been remedied, the fault memory must be erased. Then run a static test (preliminary electrical system check) using the **„Static test“** menu. Test drive the car and read out the fault memory once more.

When the hydraulic unit has been replaced or removed and refitted, fill/bleed the system. Then run a system check using the „System check“ menu.

Fault, fault code	Possible causes, remedy, notes
Test point 1	
Control unit faulty **Fault code 11**	Replace control unit. Caution: Check the following items before replacing the control unit: Check if interference caused by ignition voltage is present (e.g. due to incorrectly fitted plug connectors). Check if any potential differences caused by contact resistance are present (due to missing or poor grounding). **Important:** Poor grounding may be present not only on the components affected but also on other important ground points, e.g. transmission ground contact from starter to body. Is ground present at control unit connector PIN 28, 29? These wires are connected to ground point II (luggage compartment, front right).

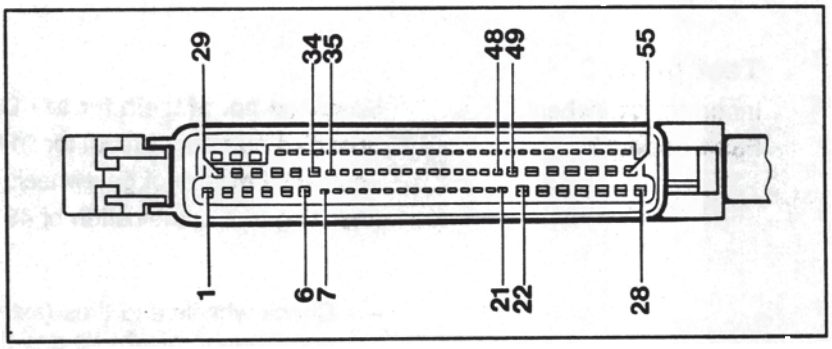

Fault, fault code	Possible causes, remedy, notes

Test point 2

Stop light switch
Fault code 12

Check with System Tester 9288 on **„Actual values"** menu. Actuate brake pedal after selecting the stop light switch. Specified display: Display changes from open to closed.

Pull off wires from stop light switch (No. 2). Check stop light switch with multimeter (remove switch for testing if required).

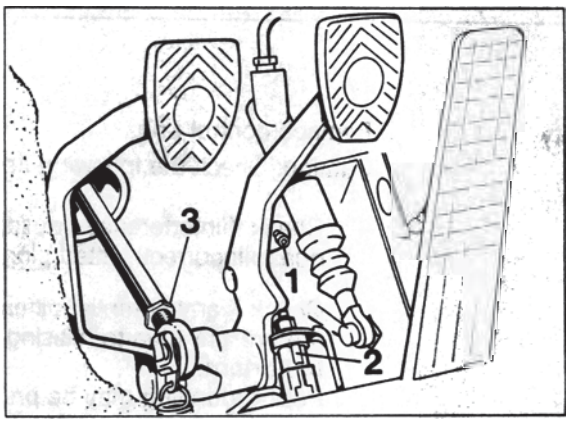

1452-46

Check stop light switch adjustment (refer to Vol. IV, Running Gear, page 46 - 11).

Check electrical wiring according to wiring diagram.

Test point 3

Incorrect gearwheel
Fault code 13

Specified no. of teeth for 911 Carrera (993) = 48 teeth
Specified number of teeth for 911 Carrera (964) = 45 teeth.
Accidental mix-up of gearwheels on front axle may occur (resulting in a combination of 48 teeth at front / 45 teeth at rear).

Check wheels and tires (extreme tire differences or incorrect combination of wheels and tires).

Fault, fault code	Possible causes, remedy, notes
	Check ABS gearwheels (tensioning discs) at front axle for correct number of teeth (Specification = 48 teeth). Identification mark: Spare part No. stamped on part (Part No.) **993 = Part No. starting with 993. Black color.** 964 = Part No. starting with 964. Note The 993 rear axle is fitted with pulse strips with a 48 module. The 964 has toothed ring gears with 45 teeth.
Test point 4 Intake valve **Fault code 14**	General procedure as for test point 15 / fault code 31. – Check different conector pin assignment (PIN No.) acc. to wiring diagram. When checking the solenoid valves, select ABD with System Tester 9288 on Drive links menu - solenoid valves (MV).
Test point 5 Switch-over valve **Fault code 15**	General procedure as for test point 15 / fault code 31. – Observe different connector pin assignment (PIN No.) acc. to wiring diagram. When checking the solenoid valves, select ABD with System Tester 9288 on Drive links menu - solenoid valves (MV).
Test point 6 Throttle (TP) information **Fault code 17**	The ABS/ABD control unit does not receive any TP information (throttle signal) from the DME control unit. The thorttle signal is checked with System Tester 9288 on the Actual values menu. Check throttle signal (throttle position) on Actual values menu with the engine running (see page 45 - 37). Then select DME System and check throttle signal (throttle angle) again in Actual values menu. If the signal is present in the DME system but not in the ABS/ABD system, the fault is in the wiring path between the ABS/ABD control unit and the DME control unit. Check wiring path (wires, connectors on control units and 14-pin connector below driver's seat) according to wiring diagram.

Fault, fault code	Possible causes, remedy, notes
Test point 7 Speed sensor front left Signal unplausible **Fault code 21**	Control unit receives incorrect / unrealistic speed sensor signal.

Procedure

Check speed sensor signal with System Tester 9288 on "Actual values" menu. Then select Speed sub-menu and select the Speed sensor front left option on this menu.
Two checks can now be carried out.
Check 1 with vehicle raised.
(Check for accidental interchanging of speed sensor and check of speed sensor signal quality).
Check 2 during straight-ahead driving at approx. 2-4 km/h.
(Signal quality of individual wheels is compared). Check 2 provides better conclusions on signal quality than Check 1.

Re: Check 1

To check, manually rotate left front wheel steadily at approx. 2 to 3km/h (observe tester display).
Increase speed slowly and observe speed increase (display) at the same time.

Specifications/Specifications display
Speed increments of approx. 0.06 km/h. Initial display at 1.75 km/h. This means: The subsequent value must exceed the value measured last by 0.06 km/h or must be 0.06 km/h below this value when the wheel is rotated slower.
In some cases, the tester rounds the value down to 0.05 km/h or up to 0.07 km/h.

Example

First measured value	= 1.81 km/h
Second value as specified	= 1,87 km/h
Third specified value	= 1,93 km/h
etc.	

Fault, fault code	Possible causes, remedy, notes

Re: Check 2

Call up all 4 wheels on tester display by additionally pressing tester button 1 (Function key 1).

Drive smoothly at approx. 2-4 km/h in straight-ahead direction and have a helper observe the tester display.

Specification: The wheel speeds of all four wheels must not deviate from each other by **more than 1 km/h**.

For additional details on Check 1 and Check 2 on the Actual values menu, refer to page 45 - 37.

Possible faults (cause for discrepancy)

Excessive air gap between speed sensor und gearwheel (pulse wheel) or air gap too small due to abrasion (chipping) (Check installation).

Pulse wheel damaged or corroded.

Incorrect pulse wheel (Should have 48 teeth).

Front-axle / rear axle speed sensors may have been mixed up. This causes the edge of the speed sensor to be offset by 90° with regard to the pulse wheel edge.
Identification: Mark on speed sensor wire (stamped Part No.) and position of mounting hole relative to edge position.
1 = Front-axle speed sensor
2 = Rear-axle speed sensor.

Wheel bearings damaged (wheel bearings are not adjustable).

Connector in wiring path from speed sensor to control unit or PIN on control unit connector is not o.k.

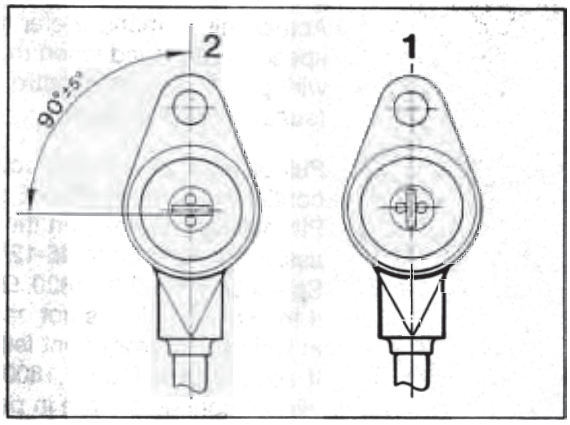

1959-45

Fault, fault code	Possible causes, remedy, notes
Test point 8	
Speed sensor front right Signal unplausible **Fault code 22**	General procedure as for test point 7 / fault code 21 (Check speed sensor signal with System Tester 9288). Speed sensor signal: Enter the Actual values menu. Select Speed and then Speed sensor front right.
Test point 9	
Speed sensor rear right Signal unplausible **Fault code 23**	General procedure as for test point 7 / fault code 21 (Check speed sensor signal with System Tester 9288). Speed sensor signal: Enter the Actual values menu. Select speed and then speed sensor rear right.
Test point 10	
Speed sensor rear left Signal unplausible **Fault code 24**	General procedure as for test point 7 / fault code 21 (Check speed sensor with System Tester 9288). Speed sensor signal: Enter Actual values menu. Select speed and then speed sensor rear left.
Test point 11	
Speed sensor front left Open circuit/ short to ground/ short to positive **Fault code 25**	Wires / connectors between control unit and speed sensor are not o.k. (open circuit, short to positive or short to ground) or the speed sensor itself is damaged. – Check speed sensor wire and connector wiring in wheel area for damage (visual check). Check speed sensor signal with System Tester 9288 across the Actual values menu (Refer to Test point 7 / fault code 21). If no speed is displayed when the left front wheel rotates, check the wiring path from the control unit connector to the speed sensor (subsequent test step). Pull off control unit connector. Measure internal resistance / continuity between PIN 36 and PIN 10 or between PIN 35 and PIN 10, respectively, on the connector (refer to connector pin assignment on page 45-12/13). Specification 1600...1800 Ω. If the specification is not obtained, check wiring and connectors in wiring path from front left speed sensor. If specification (1600...1800 Ω) is not obtained although wires / connectors are in perfect condition, replace the speed sensor.

Fault, fault code	Possible causes, remedy, notes

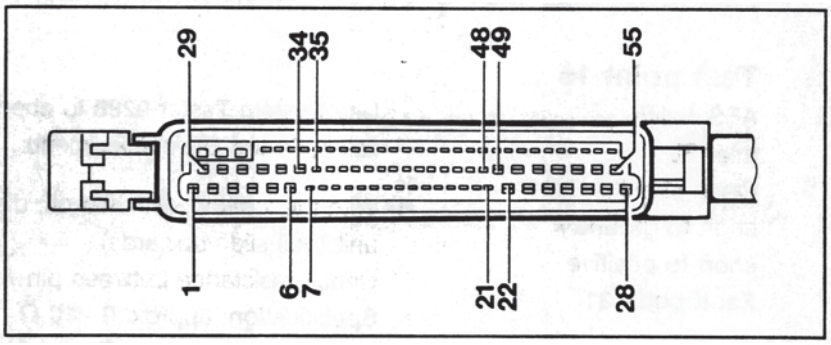

Check PIN 10, 35 or 36 (depending on model / Model Year) of control unit connector (check visually for deformation).

Test point 12

Speed sensor front right
Open circuit/ short to ground/ short to positive
Fault code 26

General procedure as for test point 11 / fault code 25.

- Speed sensor signal: Check with System Tester 9288 on Actual values menu (Select sub-menu: Speed / Speed sensor signal front right).
- Internal resistance / continuity between PIN 15 and PIN 14 on control unit connector.

Test point 13

Speed sensor rear right
Open circuit/ short to ground/ short to positive
Fault code 27

General procedure as for test point 11 / fault code 25.

Speed sensor signal: Check with System Tester 9288 on Actual values menu (Select sub-menu: Speed / Speed sensor signal rear right).

Internal resistance / continuity between PIN 11 and PIN 38 on control unit connector.

Test point 14

Speed sensor rear left
Open circuit / short to ground / short to positive
Fault code 28

General procedure as for test point 11 / fault code 25.

Speed sensor signal: Check with System Tester 9288 on Actual values menu (Select sub-menu: Speed / Speed sensor rear left).

Internal resistance / continuity between PIN 13 and PIN 12 (ABS / ABD) or between PIN 40 and PIN 12 (solo ABS) on control unit connector.

Printed in Germany – VI 1994

Fault, fault code	Possible causes, remedy, notes
Test point 15 ABS valve Inlet FL Open circuit / short to ground / short to positive **Fault code 31**	Use System Tester 9288 to check operation of the ABS solenoid valves in the Drive links menu. 1. With the ignition switched off, disengage connector from hydraulic unit (pull slide upwards). Check resistance between pin 7 and pin 15 on hydraulic unit. Specification: approx. 9 - 10 Ω. Specification not o.k.: Replace hydraulic unit. **Caution:** The resistance specifications on the hydraulic unit differ according to the solenoids. All inlet solenoids and the ABD solenoids (USV +ASV) ≈9 - 10 Ω. All outlet (exhaust) solenoids ≈4 - 5 Ω. 2. Switch off ignition and pull off connector from control unit. Check PIN 5 of control unit connector to PIN 7 of hydraulic unit connector for continuity (open circuit) and for short to ground or short to positive. 3. If the above items (1...2) are o.k., replace control unit **on a trial basis** (final stage faulty). Then check operation of front left solenoid valves (MV) with System Tester 9288 on Drive links menu (reaction of left front wheel). If reaction is not o.k., check hydraulic or electrical assignment (see below text). Assignment check: In Drive links menu, front left solenoid valves (MV) sub-menu, the left front wheel must lock in test step 2 (also refer to page 45 - 35/36). If **a different** wheel locks, the assignment is incorrect. 4. If the drive links check described under item 3 above is not o.k. but if **no** hydraulic pipes or electrical wires have been interchanged and if the control unit was replaced, the hydraulic unit must be replaced (mechanical fault in ABS solenoid valve). **Note** Reuse the old control unit again afterwards.

Fault, fault code	Possible causes, remedy, notes
Test point 16 ABS valve Inlet FR Open circuit / short to ground / short to positive **Fault code 32**	General procedure as for test point 15 / fault code 31 Observe different connector pin assignment (PIN No.) according to wiring diagram. For internal resistance of solenoid, refer to test point 15. When checking the solenoids with System Tester 9288 on the Drive links menu, select front right solenoid valves (MV).
Test point 17 ABS valve Inlet rear Open circuit / short to ground / short to positive **Fault code 33**	Vehicles with solo ABS only. See below for ABS/ABD (Inlet RL). General procedure as for test point 15 / fault code 31. Observe different connector pin assignment (PIN No.) according to wiring diagram. For internal resistance of solenoid, refer to test point 15. When checking the solenoid with System Tester 9288 on the Drive links menu, select rear solenoids (MV).
ABS valve Inlet RL Open circuit / short to ground short to positive **Fault code 33**	Vehicles with ABS/ABD only General procedure as for test point 15 / fault code 31 Observe different connector pin assignment (PIN No.) according to wiring diagram. For internal resistance of solenoid, refer to test point 15. When checking the solenoid with System Tester 9288 on the Drive links menu, select rear left solenoids (MV).

Fault, fault code	Possible causes, remedy, notes
Test point 18 ABS valve Inlet RR Open circuit / short to ground / short to positive **Fault code 34**	General procedure as for test point 15 / fault code 31 Observe different connector pin assignment (PIN No.) according to wiring diagram. For internal resistance of solenoid, refer to test point 15. When checking the solenoid with System Tester 9288 on the Drive links menu, select rear right solenoids (MV).
Test point 19 ABS valve Exhaust FL Open circuit / short to ground / short to positive **Fault code 35**	General procedure as for test point 15 / fault code 31 Observe different connector pin assignment (PIN No.) according to wiring diagram. For internal resistance of solenoid, refer to test point 15. When checking the solenoid with System Tester 9288 on the Drive links menu, select front left solenoids (MV).
Test point 20 ABS valve Exhaust FR Open circuit / short to ground / short to positive **Fault code 36**	General procedure as for test point 15 / fault code 31 Observe different connector pin assignment (PIN No.) according to wiring diagram. For internal resistance of solenoid, refer to test point 15. When checking the solenoid with System Tester 9288 on the Drive links menu, select front right solenoids (MV).
Test point 21 ABS valve Exhaust rear Open circuit / short to ground / short to positive **Fault code 37**	Vehicles with solo ABS only. Refer to next page for ABS / ABD (Exhaust RL). General procedure as for test point 15 / fault code 31. Observe different connector pin assignment (PIN No.) according to wiring diagram. For internal resistance of solenoid, refer to test point 15. When checking the solenoid with System Tester 9288 on the Drive links menu, select rear solenoids (MV).

Fault, fault code	Possible causes, remedy, notes
ABS valve Exhaust RL Open circuit / short to ground / short to positive **Fault code 37**	Vehicles with ABS/ABD only General procedure as for test point 15 / fault code 31 Observe different connector pin assignment (PIN No.) according to wiring diagram. For internal resistance of solenoid, refer to test point 15. When checking the solenoid with System Tester 9288 on the Drive links menu, select rear left solenoids (MV).
Test point 22 ABS valve Exhaust RR Open circuit / short to ground / short to positive **Fault code 38**	General procedure as for test point 15 / fault code 31 Observe different connector pin assignment (PIN No.) according to wiring diagram. For internal resistance of solenoid, refer to test point 15. When checking the solenoid with System Tester 9288 on the Drive links menu, select rear right solenoids (MV).
Test point 23 Valve relay Open circuit / short to ground / short to positive **Fault code 39**	System Tester 9288 can be used to check if the solenoid valve has picked up or dropped out. Select solenoid valve relay in the Actual values menu. The following Tester display then appears: Valve relay tightened (picked up) or released (dropped out). Specified display: Valve relay tightened. If connectors or the solenoid relay have been disconnected, switch off the ignition before running the checks and then switch the ignition on again as the (solenoid) relay otherwise cannot pick up. The valve relay may also have dropped out if another system fault is present at the same time (ABS valve fault).

Fault, fault code	Possible causes, remedy, notes

1. Pull off valve relay (R68/No.2). Release the relay holder (press out body-bound rivet No. 3) to allow the relay cover to be removed. Check that connectors engage correctly in relay base (may have partially slipped down out of base).
   Check if voltage (approx. 12 volts) is present at relay base terminal 30 (system voltage). Check 60A fuse (see page 45-8 / 45-9) and wire from relay base to fuse if required.

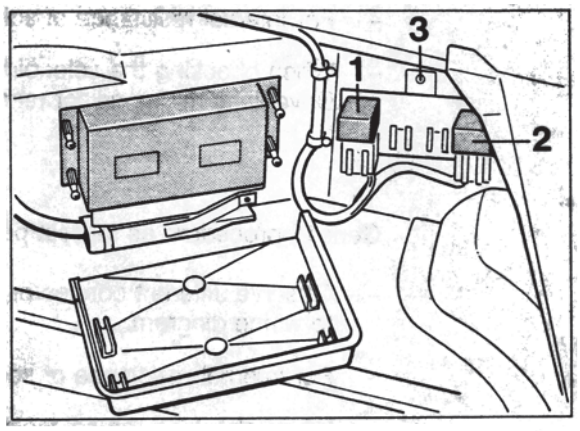

1773B-45

2. With the valve relay pulled off, jumper relay terminals 30 and 87. Use System Tester in „Actual values" menu to select the valve relay and check if tester displays the „Valve relay tightened" (picked up) message.
   Display „Valve relay tightened": Proceed with step 3.
   Display „Valve relay not tightened": Proceed with step 5.

3. Check if system voltage is present at terminal 86 of relay base (approx. 12 volt) when ignition is switched on.
   If required, check wire between control unit connector PIN 2 and relay base terminal 86.

Fault, fault code	Possible causes, remedy, notes
	4. Replace valve relay on a trial basis or use the pump return relay (identical component) for this check. Then erase the fault memory and use the „Static test" menu to check if the fault has been remedied. If the fault **is still present**, pull off control unit connector with the ignition switched off and check the control circuit (wires once with valve relay connected and once without valve relay if required) according to wiring diagram for open circuit, short to ground and short to positive.
	5. Pull off connector from hydraulic unit (pull slide upwards). Check wire between connector PIN 15 and valve relay base terminal 87 (valve relay pulled off) for open circuit, short to ground and short to positive.
	6. Measure resistance between valve relay base terminal 87 (relay pulled off) and between the following PINs with the **control unit connector pulled off** (Connector is connected at hydraulic unit): Pins 5, 53, 54 and additionally 3, 4 and 6 on ABD vehicles **to** terminal 87. Specification: approx. 9...12 Ω in each case. PIN 25, 26, 33 and additionally 34 on ABD vehicles **to** terminal 87. Specification: approx. 4...7 Ω in each case. If specification is o.k., proceed with 7. If specification is **not** o.k., locate fault. The fault may be located between the control unit connector and the wires up to the connector of the hydraulic unit or within the hydraulic unit. To check the wires, pull off 15-pin connector from hydraulic unit (pull slide upwards). Check all solenoid wires between control unit connector and hydraulic unit connector according to wiring diagram for open circuit and short to positive or short to ground.

Fault, fault code	Possible causes, remedy, notes
	To check the hydraulic unit, measure internal resistance of solenoids. PIN 7, 8, 10 and additionally 1, 2 and 9 on ABD vehicles to PIN 15. **Specification:** approx. 9...10 Ω in each case. PIN 5, 6, 11 and additionally 13 on ABD vehicles to PIN 15. **Specification** approx. 4...5 Ω in each case. Specification not o.k.: Replace hydraulic unit. 7. If all test steps are o.k., replace ABS and/or ABS/ABD control unit on a trial basis (final stage faulty).

Test point 24

Return pump Open circuit / short to ground / short to positive **Fault code 40**	Feedback (Return pump monitor) to control unit is missing. Using System Tester 9288, the Drive links menu can be used to check operation of the return pump. Select Drive links menu and select the pump relay on this menu (Specification: Return pump operative). 1. Pull off return pump relay (R65/No.1). To allow the relay cover to be removed, detach the relay holder (press out body-bound rivet No. 3). Check connectors for correct engagement in relay base (connector may have partially slipped down out of base). Check if system voltage is present at terminal 30 of relay base (approx. 12 volts). Check fuse and wiring if required.

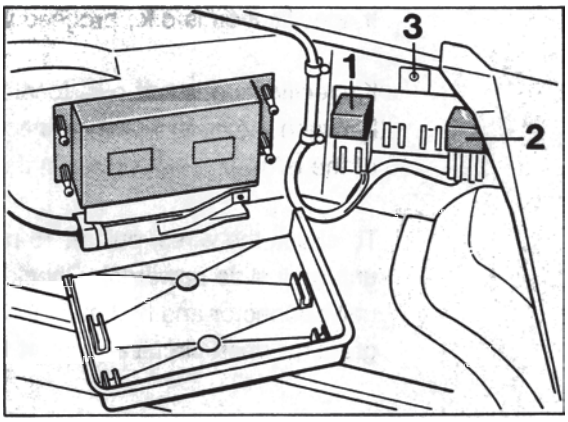

Fault, fault code	Possible causes, remedy, notes
	2. Jumper terminals 30 and 87 on relay base. Return pump should run now. If the return pump does not run: Check attachment of ground cable at return pump (on return pump and battery ground) (Contact resistance due to poor screw-on connection). Check wiring of make circuit from relay base to hydraulic unit according to wiring diagram. Replace hydraulic unit if required. Prior to this, check if return pump is actually faulty (Use a separate wire to apply system voltage to PIN 3).
	3. Fit return pump relay to relay base. To make sure that the connectors are not damaged in the relay base and that they are not pushed down, push the relay carefully into place (do not tilt relay). Check again with System Tester (as described above) to make sure the return pump is running. If pump does not run: Replace relay on a trial basis and repeat procedure.
	4. Pull off control unit connector. This requires the control unit to be removed. Check control circuit according to wiring diagram.
	5. Check wiring for pump motor monitor on control unit connector) (Control unit connector PIN 19).

Drive links (ABS and ABS / ABD)

— The Drive links menu can be used to activate the following actuators (drive links) with System Tester 9288:

Solo ABS

```
Drive links
1 = ABS warning lamp
2 = Pump relay
3 = MV front left     >
```

```
< Drive links
1 = MV front right
2 = MV rear
```

ABS/ABD

```
Drive links
1 = ABS warning lamp
2 = ABD warning lamp
3 = ABD info lamp     >
```

```
< Drive links
1 = Pump relay
2 = MV front left
3 = MV front right    >
```

```
< Drive links
1 = MV rear left
2 = MV rear right
3 = MV ABD
```

— When checking the solenoid valves (MV), the „Does wheel turn or is wheel locked-up" messages may be displayed several times. The test step (sequence) is therefore indicated **as a number in brackets.**

Example:

The digit 3 in brackets (following the text) refers to **test step No. 3**.

```
Does front left
wheel turn (3)
1 = yes
3 = no
```

Important note

With the solenoid (MV) check, both operation and assignment (check for interchanging of electrical wires or hydraulic pipes) can be checked.

If no function or an incorrect function (reaction) is obtained when the selected actuator (drive link) is activated with System Tester 9288 or if the message **"See Diagnostic / test plan"** is displayed, carry out the troubleshooting procedure according to the test plan (troubleshooting list) from page 45 - 35.

Diagnostics / Test plan (troubleshooting) for actuators (drive links)

Re: Warning lamps und information lamp

The respective warning or information lamp (as selected) does not flash.

– Check bulb.

  Check wiring to Central Information System and control unit according to wiring diagram.

Re: Pump relay

Return pump does not operate.

  Carry out troubleshooting procedure according to test point 24 (Fault code 40) on page 45 - 32.

MV (solenoids) front and rear

Solenoids or return pump do/does not operate correctly. If a mechanical fault is present in a solenoid, the fault will not be stored in the fault memory.
Hydraulic pipes or electrical wiring may have been interchanged accidentally.

If a fault has been stored in the fault memory, start by remedying this fault (also refer to page 45-17).

Test step 1 (not o.k.).

– Inlet solenoid faulty.

– Electrical wiring/hydraulic piping interchanged.

Test step 2 (not o.k.).

  Brake pedal has not been operated.

  If another wheel locks up (with parking brake released and selector lever of Tiptronic vehicles in N position), the hydraulic pipes or electrical wires have been interchanged.

Test step 3 (not o.k.)

  Exhaust (outlet) solenoid faulty.

Solenoids (MV) for ABD

ABD solenoids not o.k. (Operation or sealing).

Note

A correct check of the ABD solenoids is only possible if no faults are present at any ABS inlet solenoid or ABS exhaust (outlet) solenoid. Always start by reading out the fault memory and remedy this fault first as required (also refer to page 45-17).

Test step 1 not o.k.

– Operation of switchover valve not o.k.

Return pump operation not o.k.
Check pump operation, selecting the pump relay on the Drive links menu (Pump should then start to run).

Test step 2 not o.k.

– Operation of intake valve not o.k.

Test step 3 not o.k.

Poor bleeding of ABD secondary circuit.

Intake or switchover valve leaky.

Actual values (ABS and ABS/ABD)

This menu (function) allows the following actual values to be checked:

— Stop light switch

— Valve relay

Return pump

— Speed (Wheel speed / Check is possible for speeds of up to 19 km/h)

Front left
Front right
Rear left
Rear right

Terminal 61

Throttle (Does not exist on solo ABS system)

Re: Stop light switch:

Operate brake pedal.

Specified display: Shift from open to closed.

Re: Valve (solenoid) relay:

With the ignition switched on and with the engine running and the system in good condition, the following display appears: „Valve relay tightened" (picked up).

Re: Return pump:

Display: Return pump not activated (Display would read activated if pump is running).

Re: Speed:

Use select button (function key) to select the desired wheel.
Wheel speed is displayed in km/h and mph (depending on wheel rpm).
If function key 1 is also pressed, the values for all wheels are displayed.

Example: Front left wheel

```
Speed
Front left
15.00 km/h - 9.32 mph
Return:                N
```

Example: All wheels

```
15.00 km/h   15.00 km/h
 9.32 mph     9.32 mph
15.00 km/h   15.00 km/h
 9.32 mph     9.32 mph
```

The wheels are assigned as follows on this display:

Left front wheel = 2 top left blocks	Right front wheel 2 top right blocks
Left rear wheel = 2 bottom left blocks	Right rear wheel = 2 bottom right blocks

Procedure

2 checks are possible if the speed sensor signal is monitored.

Check 1 with raised vehicle.
(Accidental interchanging of speed sensors and speed sensor signal quality check).

Check 2 during straight-ahead driving at approx. 2-4 km/h
(Signal quality of individual wheels is compared). Check 2 provdes better conclusions on signal quality than check 1.

Re: Check 1

To check, manually rotate left front wheel steadily at approx. 2 to 3km/h (observe tester display)..
Increase speed slowly and observe speed increase (display) at the same time.

Specifications/Specifications display
Speed increments of approx. 0.06 km/h. Initial display at 1.75 km/h. This means: The subsequent value must exceed the value measured last by 0.06 km/h or must be 0.06 km/h below this value when the wheel is rotated slower.
In some cases, the tester rounds the value down to 0.05 km/h or up to 0.07 km/h.

Example

First measured value	=1.81 km/h
Second value as specified	=1,87 km/h
Third specified value	=1,93 km/h
etc.	

Note

Lock the oposite wheel (to prevent from rotating) when checking the wheels on the rear axle.
On four-wheel drive vehicles, the three other wheels must be locked during this check.

Re: Check 2

Select all 4 wheels on tester display by additionally pressing tester button 1 (function key 1).

Drive smoothly at approx. 2-4 km/h in a straight-ahead direction and have a helper observe the tester display.

Specification: Wheel speeds of all four wheels must not
deviate from each other by **more than 1 km/h**.

Re: Signal of terminal 61

Specified display:
Engine stopped - Signal not present
Engine running - Signal present

Re: Throttle signal:

Precondition: Engine runs. Throttle position is displayed as a percentage. Display changes according to throttle position when the accelerator is depressed.

Static test (ABS and ABS/ABD)

Electrical system check (preliminary check), e.g. after relays have been replaced or after connectors have been pulled off.

Caution: Under no circumstances will this check replace the system check since **no check for accidental interchanging** of electrical wires and hydraulic pipes is made. **Neither** is the **mechanical** operation checked in this process.

If a fault is displayed, carry out the troubleshooting procedure according to the Diagnostic / Test plan from page 45-17.

System check (ABS and ABS/ABD)

Important notes

1. If work is carried out on the hydraulic unit, the speed sensors and the wiring assembly or if components and ancillaries are replaced, a **system check (operational check)** must be run. This may be required, for example, after performing accident repairs. This check avoids any accidental interchanging of electrical wiring or hydraulic piping and ensures **perfect system operation.**
   A system check should also be run after replacing certain brake pipes, e.g. on the adapter (near the upper left of the spare wheel well). Inadvertent bending of the brake pipes may result in incorrect hydraulic connections even though the pipes have different threads (M12 x 1 and M 10 x 1).

2. The system check is **menu-controlled (program-controlled)**. It is therefore **not possible to return to the previous test step!**
   The test period per test step is, in some cases, limited to 30 seconds. If the test period is exceeded, the following fault message is displayed:
   Test stage (with corresponding No.) not O.K.. **In this case, the system check has to be repeated from the start.**
   Before starting the system check, the static test is executed automatically (see page 45 - 39). **The system check is not released until the static test has been completed successfully**.

3. Since vehicles with solo ABS (without ABD) require less test steps (as some components are not fitted), the solo ABS system check bypasses the test steps related to ABD. On solo ABS systems, the system check is completed after test step No. 20 has been executed (ABS/ABD = 26 test steps).

4. Test drive the vehicle after completing the system check, making sure that a controlled braking operation (with ABS control) is performed at least once during this test drive.

System check overview (ABS and ABS/ABD)

Note

If a particular test step is found to be not o.k. during the system check, locate and remedy the fault according to the below overview.
Before starting the troubleshooting procedure, make sure that the fault is actually a system fault and is not caused by incorrect operation.
Example for incorrect operation: If a procedure displayed on the tester display is not run correctly or if an incorrect key is pressed inadvertently, the message „Test stage (with No.) not O.K. Remove cause!" is displayed.

Check of specified display / function	Test step not o.k. Possible causes, remedy, notes
Test step 1	
Activate ABS warning lamp – > Display should flash On ABS/ABD, the ABD warning lamp is also activated	For troubleshooting purposes, the warning lamp may also be activated via the Drive links menu. Check bulb Check wiring to Central Information System and control unit according to wiring diagram
Test step 2	
Activate ABD warning lamp – > Display should flash	Proceed as for test step 1
Test step 3	
Activate ABD information lamp – > Display should flash	Proceed as for test step 1

Check of specified display / function	Test step not o.k. Possible causes, remedy, notes
Test step 4	
Activate return pump relay – > Return pump operates audibly.	For troubleshooting purposes, the return pump may also be activated via the Drive links menu (Pump relay sub-menu) For troubleshooting, proceed as for test point 24 (Return pump / fault code 40), page 45-32.
Test step 5	
Actuate brakes briefly – > Stop light switch status (open or closed) is checked. Specification: Closed, but no display.	The open or closed status of the stop light switch can be checked on the Actual values menu. For troubleshooting, proceed as for test point 2 (Stop light switch /fault code 12), page 45 - 20.
Test step 6 - 9	
Check speed sensor for operation and accidental interchanging. Rotate all 4 wheels **individually** fast enough to cause the bar graph on the tester display to move up to the stop. Caution: When checking a wheel on the rear axle, lock the opposite wheel, and in the case of four-wheel drive vehicles, lock all three other wheels. **Note** Test step No.: 6 = Front left wheel 7 = Front right wheel 8 = Rear left wheel 9 = Rear right wheel	The Speed sensors (wheel speeds) can be checked via the Actual values menu (Speed sub-menu). Enter the Actual values menu. Select the Speed option. Caution: If function key 1 is pressed additionally or a second time, all 4 wheels are displayed simultaneously on the tester display. Turn wheel that has displayed a test step that is not o.k. Caution: When checking a wheel on the rear axle, lock the opposite wheel, and in the case of four-wheel drive vehicles, lock all three other wheels. If the tester display now displays a not o.k. condition for **a different** wheel, the electrical wirnig has been interchanged accidentally (incorrect assignment of speed sensors). Normally this is impossible, yet it may occur if unauthorized repairs have been made on the wiring harness during accident repair operations. Perform troubleshooting procedure as for test points 7 to 14 (for each wheel) from page 45 - 22.

Check of specified display / function	Test step not o.k. Possible causes, remedy, notes

Test step 10

Start engine. Check signal of terminal 61 – > Specification: Signal present.

For troubleshooting, the status of terminal 61 (present or not present) may also be checked using the Actual values menu.

Select terminal 61 on the Actual values menu. If the tester displays "not present" while the engine is running, select the Alarm system and also check the status of terminal 61 in the Input signals menu of the Alarm system.
If the signal is present **there**, the fault is located in the wire between the ABS control unit and the other control unit. Use wiring diagram for troubleshooting.
If the terminal 61 signal is **not present** in the other system either, proceed with the next item.

Alternator bulb (warning lamp) in instrument cluster faulty.
Check bulb (must be on when ignition is switched on).

Check alternator.

Test step 11

Throttle signal is checked.
Actuate throttle (accelerator) with engine running to check the values displayed on the tester for plausibility.

For troubleshooting, the throttle signal can also be checked with the Actual values menu.

For troubleshooting, proceed as for test point 6 (TP information / fault code 17), page 45 - 21.

Check of specified display / function	Test step not o.k. Possible causes, remedy, notes

Test steps 12 - 23

Check inlet and outlet (exhaust) solenoids in hydraulic unit for operation and accidental interchanging.
Rotate all 4 wheels individually (successively according to tester menu instructions).
On solo ABS systems, the rear-axle solenoids can be checked either on the right or the left wheel
(Test step 18...20)

For troubleshooting, the solenoids can also be activated individually using the Drive links menu.

If another but the wheel shown on the tester display reacts, this means that the brake pipes have been interchanged (e.g. on adapter fitting / see also page 45-40, item 1.).
This may also be due to accidental interchanging of electrical wiring if unauthorized repairs have been made on the wiring harness after accident repairs.

For troubleshooting, proceed as for test points 15 - 22, pages 45-26 to 45-29 (depending on test step that the fault occurred in).

Test steps 24 - 26

Check operation of ABD solenoid valves (intake and switchover valves) in hydraulic unit.
Do not actuate the brakes during this check.
The test may be run on either the right or the left wheel.

For troubleshooting, the ABD solenoids can also be triggered via the Drive links menu.

Perform troubleshooting as for test point 4 or 5 (fault code 14 or 15), page 45 - 21.

Menu: Bleed (ABS/ABD 5)

Important notes

The Bleed menu is not available (not required) on solo ABS systems.
This menu is used to bleed the ABD secondary circuit in the hydraulic unit on vehicles fitted with ABD.
Caution: This additional bleeding operation **is only** required after **conventional** bleeding and only when the hydraulic unit has been replaced or removed and refitted.
Bleeding the secondary circuit may also be required in the case of excessive pedal travel, provided that the system has been bled correctly before.

Bleeding the ABD circuit

Preparatory operations: Bleed brakes in conventional manner (Page 47 - 5/6, Vol. IV, Running Gear).

- Leave the bleeding device connected (switched on) to bleed the ABD circuit.
  Bleeding pressure approx. 1.5...2.0 bar.
  Overflow hose (for venting) on expansion tank is clamped off with a hose clamp.

- Connect **System Tester 9288** to diagnostic socket. Switch ignition on. Select „Bleed" menu.

- Open rear right bleeder valve (Use bottle to catch fluid).

- Press start button on System Tester. This causes specific functions in hydraulic unit to be activated (Return pump, ASV valve and switchover valve are activated).
  Bleed system until the escaping brake fluid is bubble-free.
  Also actuate (pump) the brake pedal during the entire bleeding process at least 10 times across the full pedal stroke (to the pedal stop).
  Caution: On high-mileage or older vehicles, double the pump cycles and use only half the brake master cylinder stroke (to avoid damage to brake master cylinder / primary cup).

- Close rear right bleeder valve. Then press stop button on System Tester immediately.

  Switch off ignition and disconnect System Tester.

- Switch off and disconnect bleeding device. Top up brake fluid if required.

68 01

Diagnosis/ Troubleshooting

Airbag

System B 02

Overview of contents

	Page
General information	68 - 3
Menu (overview of available menus)	68 - 4
Component layout	68 - 5
Operation of individual components	68 - 6
System description	68 - 7
Tools	68 - 8
Triggering unit connector assignment	68 - 9
Fault memory (overview of available displays)	68 - 10
Fault overview	68 - 11
Coding	68 - 16
Locking	68 - 17
Results	68 - 18

General information

The airbag system is monitored continuously by a diagnosis unit located in the triggering unit. Any faults present are highlighted by a warning lamp.

If a fault occurs, the central warning lamp and the airbag system warning lamp come on.

The airbag warning lamp lights for approx. 5 seconds after the ignition is switched on and will go off if no fault is stored in the fault memory.

If the lamp comes on again, this means that a fault is present in the system. The fault may be read out with System Tester 9288. If the fault is not crash-relevant, the warning lamp is not activated all the time but only for approx. 2 minutes.

Note

To allow the triggering unit to recognize all faults in the system, it requires a minimum time span of 10 seconds. to ensure that allow potential fault sources are checked during the vehicle test, the ignition must be switched on for at least 10 seconds.

The fault memory must be erased after a fault that has occurred in the airbag system has been removed.

Replacement of a component should be recorded in the Warranty and Maintenance booklet. Glue the documentation number into the space provided. The documentation number is indicated on a tear-off sticker on the spare part.

The following components must be removed and replaced if the vehicle has been involved in an accident that has caused the airbag to be triggered:

Contact unit

Both airbag units.

Menu

Overview of available menus

```
        Menu
1 = Fault memory
2 = Coding
3 = Lock              >
```

```
<       Menu
1 = Results
```

Fault memory: refer to page 68 - 10

Coding: refer to page 68 - 16

Lock: refer to page 68 - 17

Results: refer to page 68 - 18

Note

Observe safety precautions when working on the airbag system (Vol. V, pages 68 - 7 to 68 - 8).

Component layout

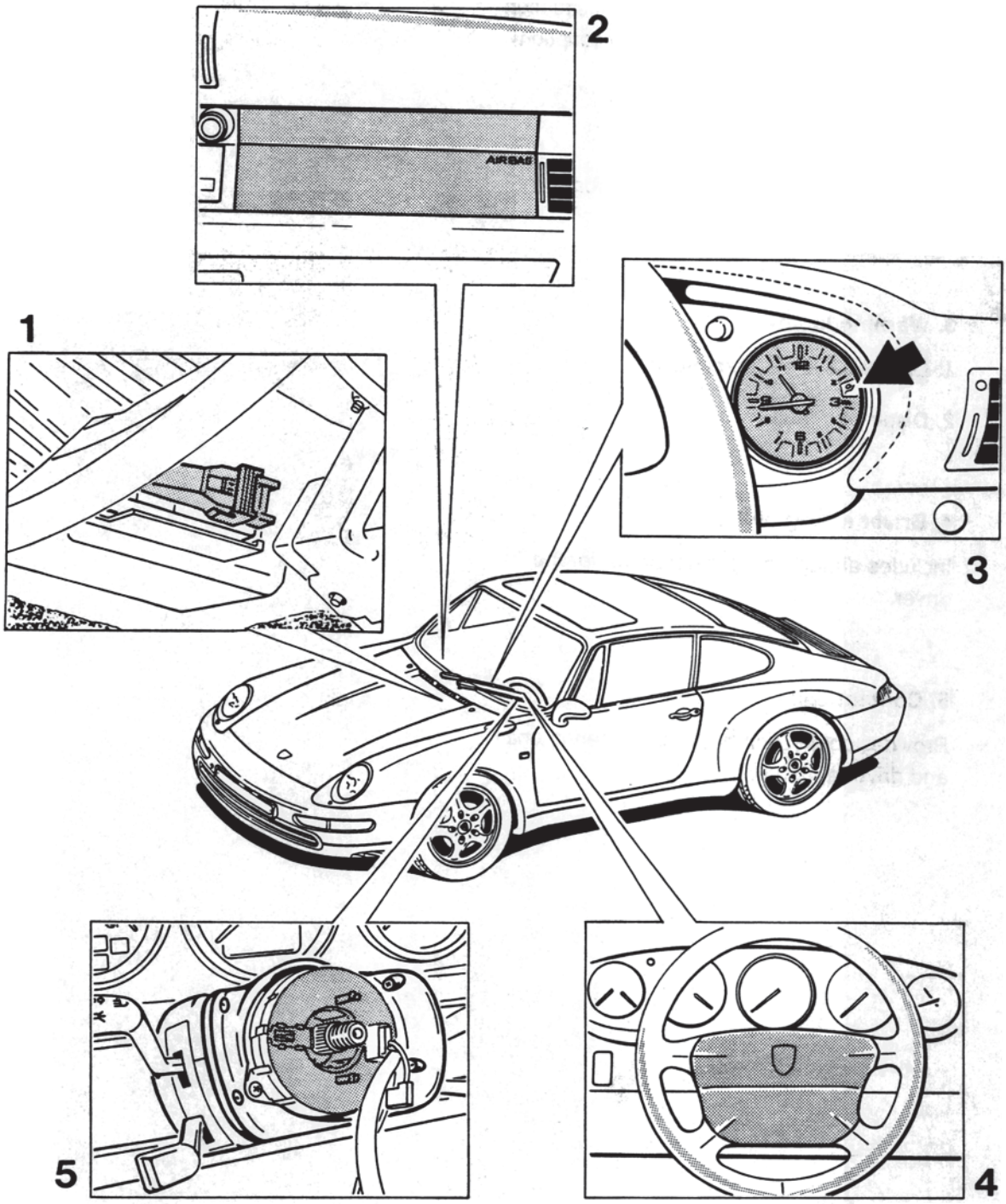

Operation of individual components

1. Triggering unit

Processes the incoming signals and triggers the airbag system when an accident situation is detected (also refer to system description).

2. Passenger airbag unit

Includes airbag and gas generator for the passenger.

3. Warning lamp

1. Displays system readiness.
2. Displays a fault.

4. Driver airbag unit

Includes airbag and gas generator for the driver.

5. Contact unit

Provides connection between triggering unit and driver airbag unit.

System description

The airbag system consists of the following components: triggering unit, contact unit, driver airbag unit, passenger airbag unit and warning lamp. A self-test is run after the ignition is switched on. The warning lamp is activated during the self-test. If no faults are stored in the fault memory, the warning lamp will go out after approx. 5 seconds.

A maximum of 10 faults can be stored. The duration is also stored for the first 5 faults.

A differentiation is made between crash-relevant faults and non-crash relevant faults. Faults that are not crash-relevant are indicated by longer illumination of the warning lamp which will come on for approx. 2 minutes after the ignition is switched on. They will not affect the operation of the airbag system.

A crash-relevant fault is indicated by permanent illumination of the warning lamp after the ignition is switched on.

The triggering unit covers the following functions:

- Crash detection and determination of ignition point
- Ignition of the airbag system
- Recording of crash data
- Self-test and permanent monitoring of the airbag system
- Fault storage
- Fault display
- Fault output
- System readiness display

The triggering unit should be replaced only after the airbag has been triggered for the third time of if the fault memory cannot be erased anymore.

When replacing the triggering unit, use the System Tester to load the record for the respective vehicle and to lock the triggering unit.
The warning lamp starts to flash before the unit is locked. After the locking process has been completed successfully, the warning lamp goes off (unless a fault has occurred).

Tools

Tools required for troubleshooting:

1. **System Tester 9288 in conjunction with adapter lead 9288/1**

2. **Special Tool 9516**

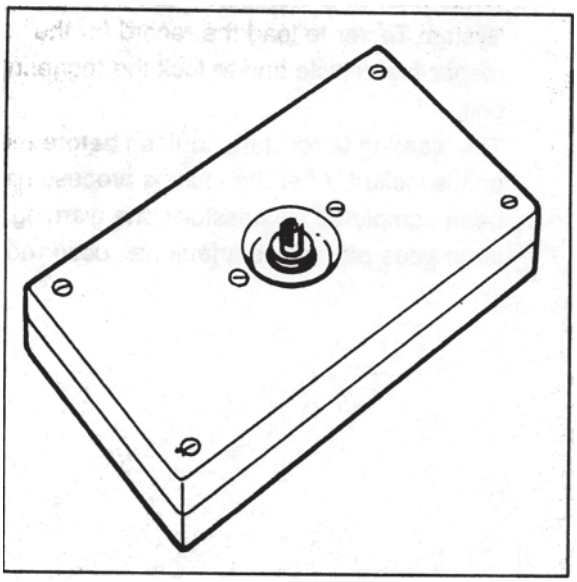

3. **Special Tool 9566**

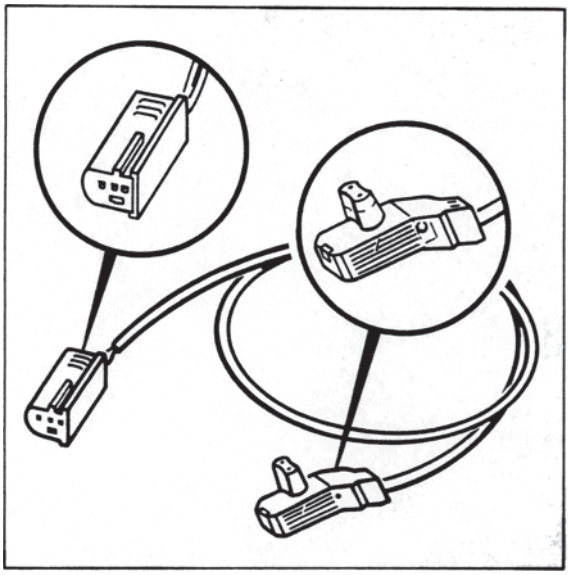

4. **Commercially available digital multimeter**

Note

The Special Tools are used to check the ignition pill circuits. **For safety reasons, never drive the vehicle when the Special Tools are connected insted of the airbag units.**

Triggering unit connector assignment

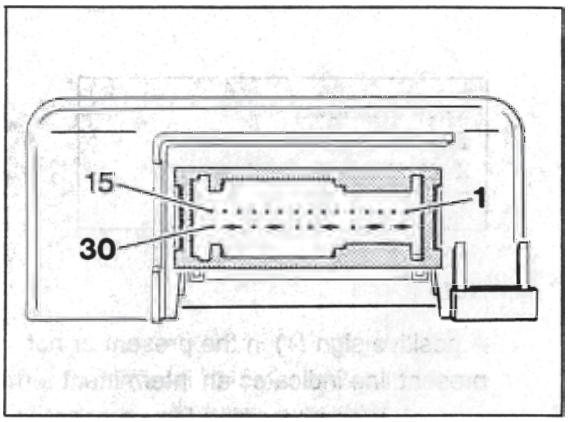

1838-68

- not used

2 - not used

3 - not used

4 - not used

5 - terminal 15

6 - terminal 31

7 - warning lamp

8 - not used

9 - K line

10 - ignition pill driver side, positive

11 - ignition pill driver side, negative

12 - not used

13 - ignition pill passenger side, positive

14 - ignition pill passenger side, negative

15 - not used

16/17 - Tab for opening the short-circuit jumper

18/19 - Tab for opening the short-circuit jumper

20 - Output terminal 15 DME

21/22 - Tab for opening short-circuit jumper

23 - not used

24 - not used

25/26 - Tab for opening the short-circuit jumper

27 - not used

28/29 - Tab for opening the short-circuit jumper

30 - not used

Fault memory

Overview of available displays

```
xx: Ignition circuit
driver
XXXXXXXXXXXXXXXXXXXX
XXXXXXXXXXXX    X
```

```
xx: Ignition circuit
passenger
XXXXXXXXXXXXXXXXXXXX
XXXXXXXXXXXX    X
```

```
xx: Supply
voltage
XXXXXXXXXXXXXXXXXXXX
XXXXXXXXXXXX    X
```

```
xx: Warning light
airbag
XXXXXXXXXXXXXXXXXXXX
XXXXXXXXXXXX    X
```

```
xx: Short circuit
ignition pills

XXXXXXXXXXXX    X
```

```
xx: Control unit
fault
```

```
xx: Result
message

present
```

```
xx: Control unit
fault
X X X X X X X X
7 6 5 4 3 2 1 0
```

```
xx: Unknown
fault code
X X X X X X X X
7 6 5 4 3 2 1 0
```

Note

A positive sign (+) in the present or not present line indicates an intermittent terminal contact. When changing form present to not present, a counter is started. This counter shows how often the change from present to not present has occurred.

When a fault is detected, a start fault clock is started. The start fault clock indicates the hours, minutes and seconds since the fault has occurred for the first time.

When changing from present to not present, a stop fault clock is started. The stop fault clock indicates the time elapsed since the fault was no longer present. However, both clocks only count the time with the ignition on, i.e. the clocks are stopped when the ignition is switched off.

Fault overview

Test point	Fault code	Result of fault	Page
1	2	Fault memory	68 - 12
2	5	Fault memory	68 - 13
3	17	Fault memory	68 - 14
4	19	Fault memory (1	68 - 14
5	73	Fault memory	68 - 14
6	76	Fault memory cannot be erased (2	68 - 14
7	77	Fault memory cannot be erased (2	68 - 15
8	XX (3	Fault memory cannot be erased (2	68 - 15
9	XX	Fault memory	68 - 15

(1 Does not affect passenger protection. Will only be indicated by longer illumination of the warning lamp (approx. 2 mins.) after the ignition is switched on.

(2 Triggering unit must be replaced.

(3 Fault codes: 1, 6, 7, 12, 13, 14, 15, 16, 18, 23, 48, 49, 50, 51, 52, 53, 54, 55, 56, 57, 58, 59, 60, 61, 62, 63, 65, 67, 68, 69, 70, 71, 72.

Fault, Fault code	Possible Causes, Elimination, Remarks

Test point 1

Driver ignition circuit leakage resistance / short to ground or leakage resistance / short to positive or above threshold or below threshold

Fault code 2

1. Remove driver airbag.

2. Connect Special Tool 9516 instead of airbag unit.

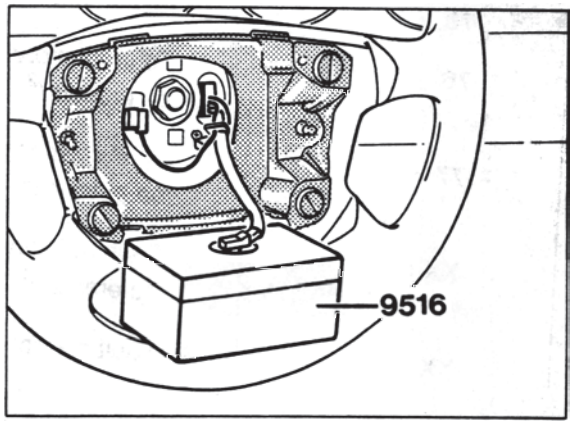

1839-68

3. Erase fault memory.

4. Check if fault is displayed again.

a) If fault does not appear again, replace the airbag unit.

b) If the fault appears again, disconnect the plug connection to the contact unit and attach the special tool 9516/1.

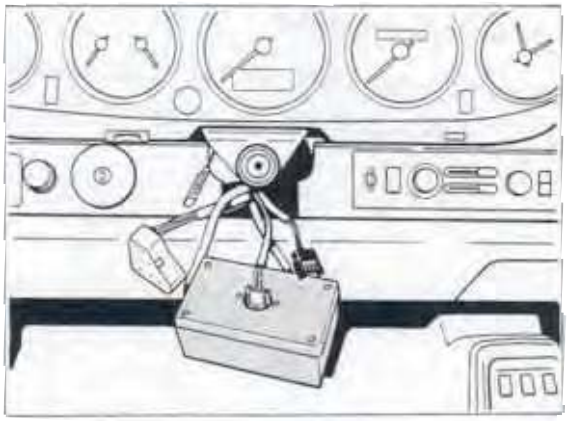

588-68

Fault, Fault code	Possible Causes, Elimination, Remarks
	5. Erase fault memory. 6. Check if fault is displayed again. a) If fault is not displayed anymore, replace contact unit. b) If fault is displayed again, check wiring harness for signs of crushing and chafing. c) If no fault is detected in the wiring harness, replace triggering unit.

Test point 2

Passenger ignition circuit leakage resistance / short to ground or leakage resistance / short to positive or below threshold or above threshold
Fault code 5

1. Disconnect connector from passenger airbag unit.

2. Connect Special Tool 9516 combined with Special Tool 9566.

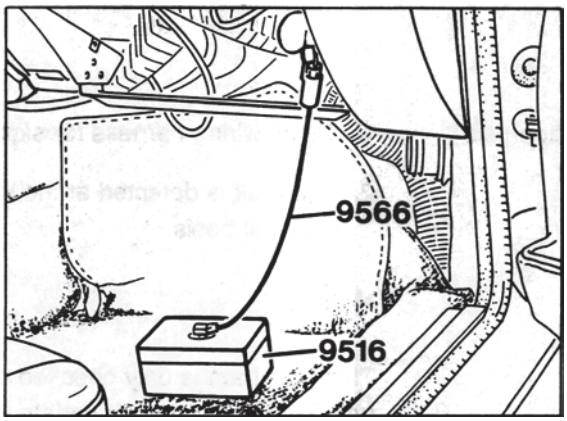

1840-68

3. Erase fault memory.

4. Check if fault is displayed again.
   a) If fault is not displayed anymore, replace passenger airbag unit
   b) If fault is displayed again, check wiring harness for signs of crushing and chafing.
   c) If no fault is detected at the wiring harness, replace triggering unit.

Fault, Fault code	Possible Causes, Elimination, Remarks
Test point 3 Supply voltage below threshold **Fault code 17**	1. Check battery or generator. 2. Check plug-in connector at triggering unit for corrosion.
Test point 4 Airbag warning light leakage resistance / short to positive or open circuit **Fault code 19**	1. Check fuse for voltage supply of monitoring and warning lamps lamps in clock. 2. Check bulb, replace if required. 3. Check wire from triggering unit pin 7 to warning lamp for continuity or short to positive.
Test point 5 Short circuit ignition pills **Fault code 73**	1. Check wiring harness for signs of crushing and chafing. 2. If no fault is detected at the wiring harness, replace triggering unit on a trial basis. **Note** This fault path is only checked during the self-test of the triggering unit, i.e. the fault is not updated during the cyclic tests. The fault is always output as being not present, even if the fault is present. As of **module version 6.0**, the not present condition is no longer indicated. When the fault memory is erased, the ignition must be switched off and back on to check the fault path. This is the only way to start another self-test.
Test point 6 Control unit fault **Fault code 76**	Replace triggering unit.

Fault, Fault code	Possible causes, remedies, notes
Test point 7	
Result message **Fault code 77**	Replace triggering unit.
Test point 8	
Control unit fault X X X X X X X X(1 **Fault code XX(2**	Replace triggering unit.
Test point 9	
Unknown fault code X X X X X X X X(1 **Fault code XX**	1. Check secondary side of ignition. 2. Erase fault memory.

(1 - Display of fault type byte

(2 - Possible fault codes Refer to page 68 - 11

Coding

In the "Coding" menu item, the vehicle type, the record version and the equipment may be read out.
In addition, you can also read out where the triggering unit was locked.

```
Locked by:
XXXXXXXXXXXXXXXXXXXX(1
Manufacturer:
XXXXXXXXXXXX(2          >
```

(1 Porsche or
Development Dept. or
workshop or
not locked or
unknown

(2 Porsche or
unknown

Note

The airbag warning lamp flashes as long as the triggering unit is not locked. The triggering unit must then be locked under the "Lock" menu item.

```
< Vehicle type:
XXXXXXXXXXXXXXXXXXXX(3
Database version:
10  (Hex)               >
```

(3 911 Carrera (993) or
unknown

```
< Equipment:
XXXXXXXXXXXXXXXXXXXX(4

Return:                 N
```

(4 Driver/passenger or
unknown

Note

The following display appears when key 1 (additional information) is pressed:

```
B6D9:  XX    B6E1:  XX
B6DC:  XX    B638:  XX
B6E0:  XX    B639:  XX
zurück:                 N
```

It contains the memory contents of the respective addresses.

Lock

The "Lock" menu item allows an unlocked triggering unit to be locked.
A locked triggering unit can**not be unlocked** anymore.
The airbag warning lamp flashes if the triggering unit is not locked. The triggering unit must then be locked.
The spare triggering units are supplied unlocked.

```
Lock
airbag?
1 = Yes
3 = No
```

Press key 1.
If no fault is present, the following display appears after a short time:

```
Airbag
was locked

Return:                N
```

The locking operation is now completed.

The following fault displays may appear if a fault condition occurs:

```
Airbag was
already locked
XXXXXXXXXXXX(1
Return:                N
```

([1] Porsche or
workshop or
Development Dept.

```
No Porsche
control unit
xx (Hex)
Return:                N
```

```
Incorrect
vehicle type
xx (Hex)
Return:                N
```

```
Incorrect
database version
xx (Hex)
Return:                N
```

```
Incorrect
equipment
xx (Hex)
Return:                N
```

If a fault occurs, the triggering unit cannot be locked. Replace triggering unit in those cases.

Results

Crash data may be read out under the "Results" menu item. A maximum of three results may be stored. Each result includes 13 bytes. The triggering unit must be replaced after the third result has occurred as the air-bag warning lamp will then light continuously and the results cannot be erased.

68 01

Diagnosis / Troubleshooting

Airbag

System B 03

Contents overvie"

	Page
General instructions	68
Menu (overview of possible menus)	68
Component arrangement	68
unction individual components	68 24
System description	68 25
	68 26
Connector assignment, triggering unit	68 27
ault memory (overview of the possible displays)	68 28
Fault overview	68 29
	68 34
Locking	68
heckin the coding	68 36
Changing the coding	68 37

General instructions

The airbag system is constantly monitored by a diagnosis unit in the triggering unit. Any fault is signalled by a warning light.

The central warning light and the warning lamp for the airbag system light up in the event of a fault.

The airbag warning light lights for approx. 5 seconds after the ignition is switched on and goes out if no fault has been entered in the fault memory.

If it lights up again, this indicates a fault in the system. The fault can be read out with the System Tester 9288. **If the fault is not relevant to crash protection, the warning light is not triggered continuously but only for approx. 2 minutes.**

Note

A period of 10 seconds is required to enable the triggering unit to identify all faults in the system. In order to guarantee that every possible fault source is checked during the vehicle check, the ignition must be switched on for at least 10 seconds.

The fault memory must be cleared following a fault in the airbag system and after it has been remedied.

The replacement of a component must be noted in the Guarantee and Maintenance booklet. To do this, attach the documentation number in a free panel intended for that purpose. The documentation number is attached to the replacement part as a sticker.

The following components must be removed and replaced following an accident in which the airbag system was triggered:

Contact unit

Triggered airbag unit(s).

Menu

Overview of the possible menus

```
        Menu
1 = Fault memory
2 = Events
3 = Locking          >
```

```
<       Menu
1 = Checking the coding
2 = Changing the coding
```

Fault memory: see Page 68 - 28

Events: see Page 68 - 34

Locking: see Page 68 - 35

Checking the coding: see Page 68 - 36

Changing the coding: see Page 68 - 37

Note

Observe the safety regulations when working on the airbag system (Volume V, Pages 68 - 7 to 68 - 8).

Component arrangement

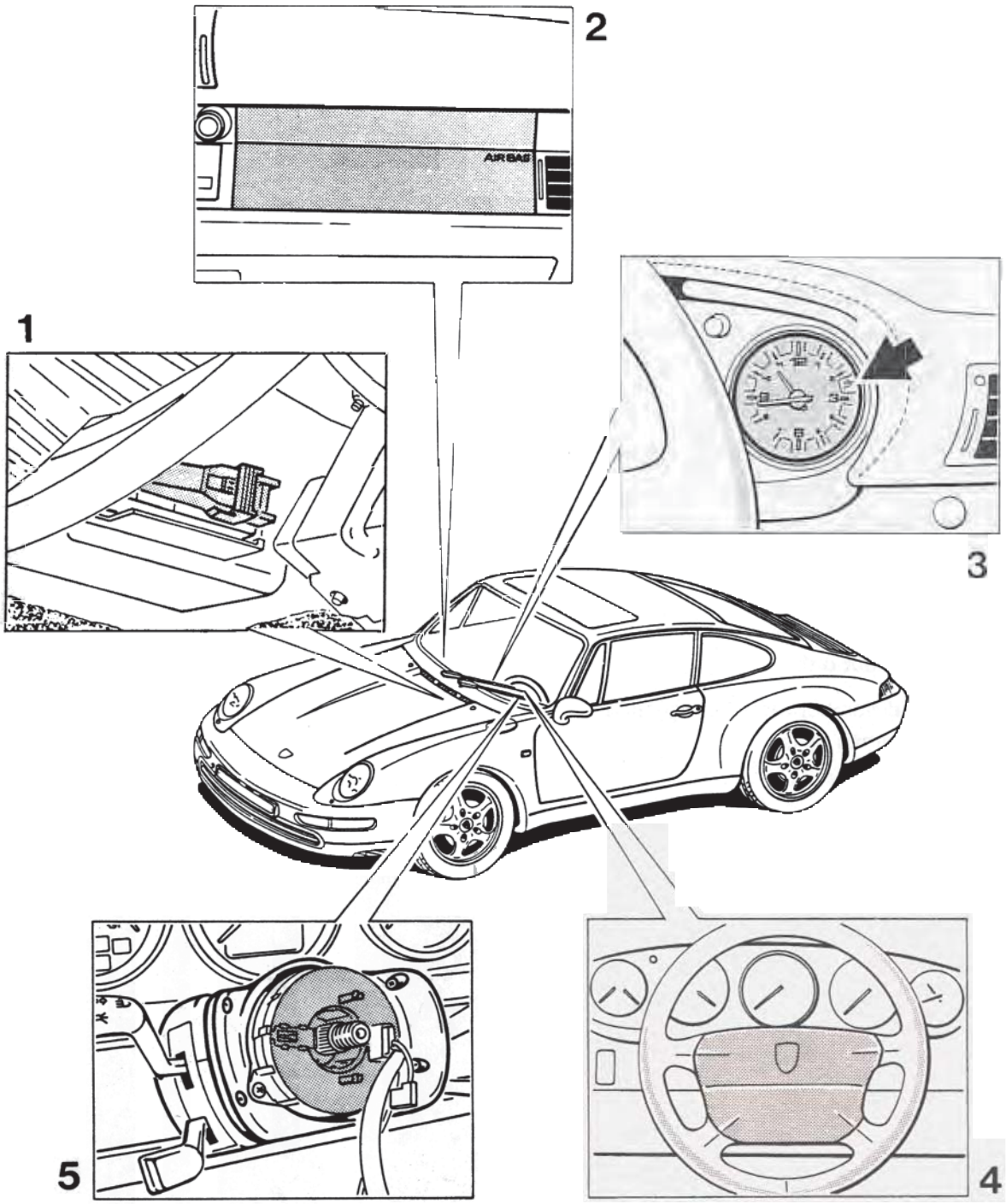

Function, individual components

Triggering unit

Processes the incoming signals and triggers the airbag system when an accident is identified (also see "System description").

2. Passenger's airbag unit

Contains the airbag and the gas generator for the passenger.

3. Warning light

– System readiness indicator.

– Fault indication.

4. Driver's airbag unit

Contains the airbag and the gas generator for the driver.

5. Contact unit

Connection between the triggering unit and driver's airbag unit.

System description

The airbag system consists of the following components: Triggering unit, contact unit, driver's airbag unit, passenger's airbag unit and the warning light. A system self-test is performed after the ignition is switched on. The warning light is switched on during the self-test. If no faults are stored in the fault memory, the warning light goes out after approx. 5 seconds.

Up to max. 10 faults can be stored. The duration is additionally stored for the first 5 faults.

A distinction is made between crash-relevant and non-crash-relevant faults. Non-crash-relevant faults are indicated by the warning light being illuminated for a longer period of approx. 2 seconds after the ignition is switched on. This does not affect the function of the airbag system.

A crash-relevant fault is indicated by continuous illumination of the warning light after the ignition is switched on.

The triggering unit has the following functions:

- Crash recognition and triggering time determination
- Ignition of the airbag system
- Recording of the crash data
- Self-test and permanent monitoring of the airbag system
- Fault storage
- Fault display
- Fault output
- System readiness display

The triggering unit must be replaced only after the third time the airbag is triggered or if the fault memory can no longer be cleared.

If the triggering unit is exchanged, the data record for the appropriate vehicle must be loaded with the System Tester and the triggering unit must be locked.

The warning light flashes before locking. The warning light goes out following locking (if no fault is present).

Printed in Germany – 22. 1997

Tools

The following are required for troubleshooting:

1. **System Tester 9288 in combination with adapter lead 9288/1**
2. **Special tool 9516**

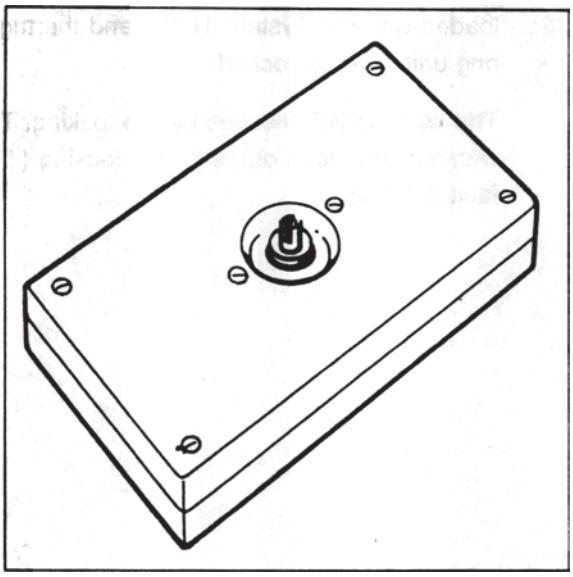

3. **Special tool 9516/1**

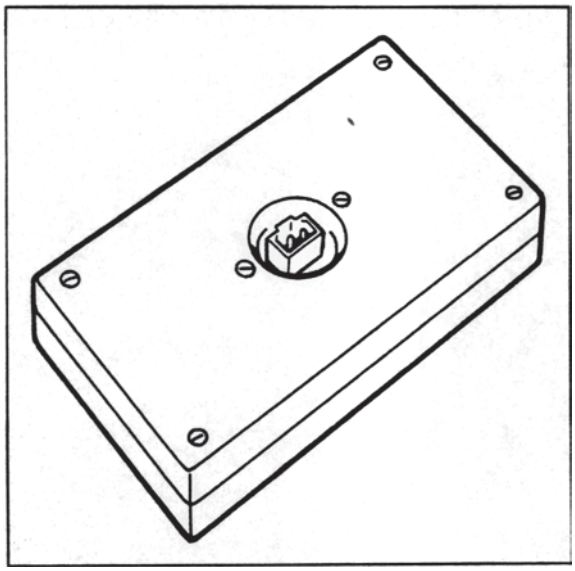

4. **Special tool 9566**

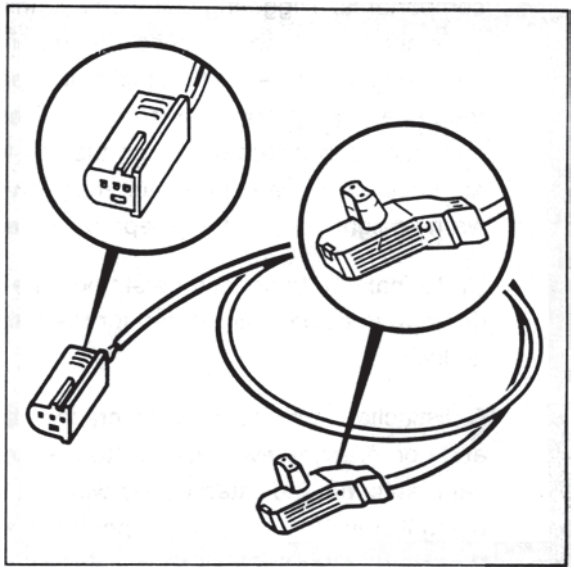

5. **Commercially available digital multimeter**

Note

The special tools are used to check the ignition pill circuits. **For safety reasons, it is not permissible to drive with special tools attached instead of the airbag units.**

Connector assignment

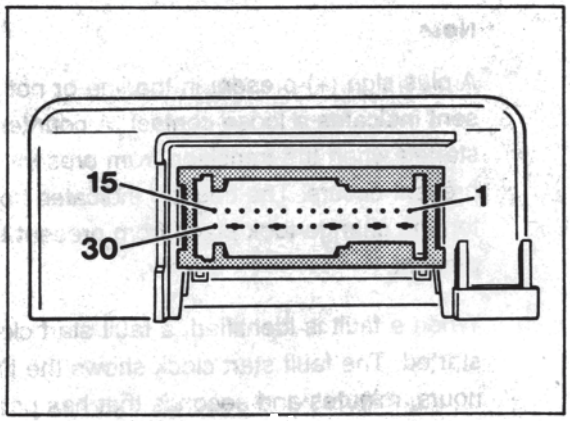

1 - Free

2 - Free

3 - Free

4 - Free

5 - Terminal 15

6 - Terminal 31

7 - Warning light

8 - Free

9 - K-wire

10 - Driver's ignition pill, positive

11 - Driver's ignition pill, negative

12 - Free

13 - Passenger's ignition pill, positive

14 - Passenger's ignition pill, negative

15 - Free

16/17 - Lug for opening the short circuit bridge

18/19 - Lug for opening the short circuit bridge

20 - Output, terminal 15 ECM

21/22 - Lug for opening the short circuit bridge

23 - Child seat detection

24 - Free

25/26 - Lug for opening the short circuit bridge

27 - Free

28/29 - Lug for opening the short circuit bridge

30 - Free

Fault memory

Overview of the possible displays

```
xx: Firing circuit,
driver
XXXXXXXXXXXXXXXXXXXX
XXXXXXXXXXXX    X
```

```
xx: Firing circuit,
passenger
XXXXXXXXXXXXXXXXXXXX
XXXXXXXXXXXX    X
```

```
xx: Supply
voltage
XXXXXXXXXXXXXXXXXXXX
XXXXXXXXXXXX    X
```

```
xx: Warning light,
airbag
XXXXXXXXXXXXXXXXXXXX
XXXXXXXXXXXX    X
```

```
xx: Child seat
detection
XXXXXXXXXXXXXXXXXXXX
XXXXXXXXXXXX    X
```

```
xx: Control unit
faulty
X X X X X X X X
7 6 5 4 3 2 1 0
```

```
xx: Unknown
fault code
X X X X X X X X
7 6 5 4 3 2 1 0
```

Note

A plus sign (+) present in the line or not present indicates a loose contact. A counter is started when the transition from present to not present occurs. The counter indicates how often the change took place from present to not present.

When a fault is identified, a fault start clock is started. The fault start clock shows the time in hours, minutes and seconds that has passed since the fault first occurred.

When a changeover occurs from present to not present, a fault stop clock is started. The fault stop clock shows the time that has passed since the fault was no longer present. However, with both clocks, only ignition On times are counted. This means that the clocks are stopped when the ignition is switched off.

Fault overview

Test point	Fault code	Fault effect	Page
1	04, 05, 20, 21, 36	Fault memory	68 - 30
2	10, 11, 26, 27, 39	Fault memory	68 - 31
3	03	Fault memory ①	68 - 32
4	01, 02	Fault memory ②	68 - 32
5	70, 71, 72, 73	Fault memory	68 - 32
6	≥100	Fault memory ③	68 - 32
7	XXX	Fault memory	68 - 33

① The warning light is on as long as the limit value is exceeded or not reached.

② This does not influence passenger protection. It is only indicated by longer activation of the warning light (approx. 2 min.) after the ignition is switched on.

③ The triggering unit must be replaced.

Note

Check the coding if faults appear that are not described here.
Incorrect coding can cause faults to be indicated that are not really present. Coding must take place according to the vehicle equipment.

Printed in Germany 09.1997

Fault, fault code	Possible causes, elimination, notes

Test point 1

Firing circuit, driver
Fault codes 04, 05, 20, 21, 36

1. Remove the driver's airbag unit.
2. Attach the special tool 9516 instead of the airbag unit.

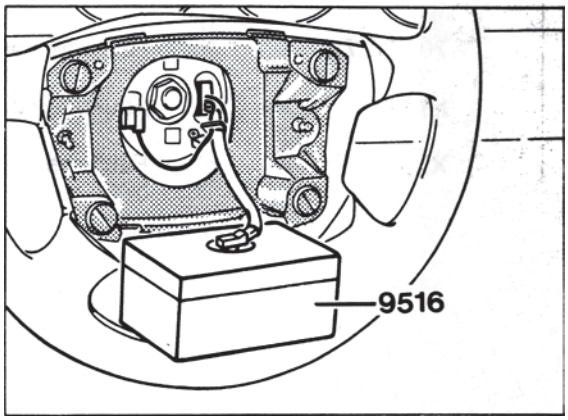

1839 - 68

3. Clear the fault memory.
4. Check whether the fault appears again.
   a) If the fault does not appear again, replace the airbag unit.
   b) If the fault appears again, disconnect the plug connection to the contact unit and attach the special tool 9516/1.

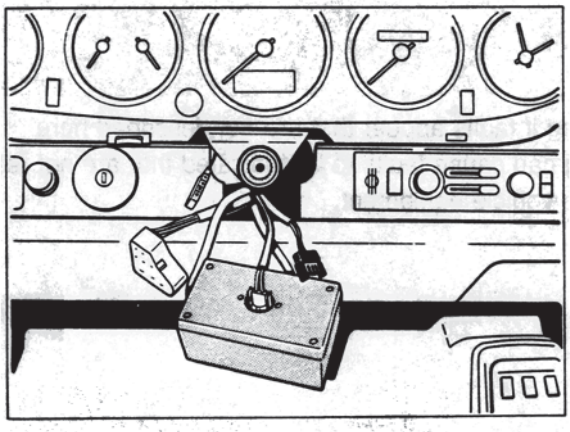

586 - 68

Fault, fault code	Possible causes, elimination, notes
	5. Clear fault memory. 6. Check whether the fault appears again. a) If the fault does not appear again, replace the contact unit. b) If the fault appears again, check the wiring harness for pinches and chafing damage. c) If no fault is found on the wiring harness, replace the triggering unit.

Test point 2

Firing circuit, passenger
Fault codes 10, 11, 26, 27, 39

1. Disconnect the plug connection to the passenger's airbag unit.
2. Attach the special tool 9516 in combination with special tool 9566.

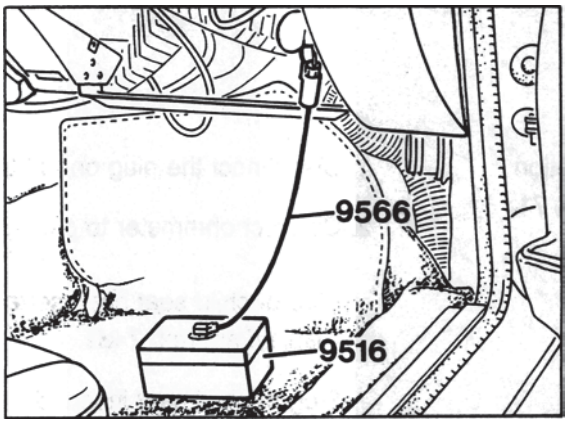

3. Clear the fault memory.
4. Check whether the fault appears again.
   a) If the fault does not appear again, replace the passenger's airbag unit.
   b) If the fault appears again, check the wiring harness for pinches and chafing damage.
   c) If no fault is found on the wiring harness, replace the triggering unit.

Fault, fault code	Possible causes, elimination, notes
Test point 3 Supply voltage **Fault code 03**	1. Inspect the battery and generator. 2. Inspect the plug connection on the triggering unit for corrosion.
Test point 4 Warning light, airbag **Fault code 01, 02**	1. Inspect the fuse for the supply voltage to the indicator and warning lights in the clock. 2. Inspect the bulb and replace it if necessary. 3. Inspect the line from the triggering unit pin 7 to the warning light for continuity and short circuit to positive.
Test point 5 Child seat detection **Fault codes 70, 71, 72, 73**	1. Disconnect the plug on the triggering unit. 2. Connect ohmmeter to plug, pin 23 and ground. Plug of child seat not inserted. Display: approx. 2 kΩ Plug of child seat inserted. Display: approx. 260 Ω 3. Inspect the wiring harness to the triggering unit for pinches and chafing damage.
Test point 6 Control unit faulty **Fault code≥100**	Replace triggering unit.

Fault, fault code	Possible causes, elimination, notes
Test point 7	
Unknown fault code X X X X X X X X ① **Fault code XXX**	1. Inspect the ground points for corrosion. 2. Inspect the ignition on the secondary side. 3. Clear the fault memory.

① - Representation of the fault type byte

Printed in Germany – 22. 1997

Events

Crash data can be read out under the menu item "Events". Up to max. three events can be saved. Each event covers 16 bytes. The triggering unit must be replaced after the third event, since the airbag warning light lights up continuously and the events cannot be deleted.

```
XX:Event
XXXXXXXX XXXXXXXX
XXXXXXXX XXXXXXXX
```


Printed in Germany 22.1997

Locking

An unlocked triggering unit can be locked under the menu item "Locking".
A locked triggering unit **cannot be unlocked again.**
If a triggering unit is unlocked, the airbag warning light flashes. The triggering unit must then be locked.
Replacement triggering units from the parts service are supplied unlocked.

```
Lock
airbag?
1 = yes
3 = no
```

Press key 1.
If there is no fault, the following message is displayed after a brief waiting time:

```
Airbag
was locked

return:                N
```

This ends locking.

The following messages can be displayed in a fault state:

```
Airbag was
already locked
XXXXXXXXXXXX ①
return:                N
```

① Porsche or workshop or development

```
Not a Porsche
control unit
xx (hex)
return:                N
```

```
Wrong
vehicle type
xx (hex)
return:                N
```

```
Wrong
data record version
xx (hex)
return:                N
```

```
Wrong
equipment
xx (hex)
return:                N
```

Note

In the event of a fault, the triggering unit cannot be locked.

Check the vehicle type and equipment and correct if necessary.

Replace the triggering unit if necessary.

Checking the coding

Under the menu item "Checking the coding", the vehicle type, data record version and the equipment can be read out.
Also, it is possible to read out where the airbag triggering unit was locked.

```
Locked by:
XXXXXXXXXXXXXXXXXXXX ①
Manufacturer:
XXXXXXXXXXXXXX ②          >
```

① Porsche or
development or
workshop or
not locked or
unknown

② Porsche or
unknown

Note

The airbag MIL flashes for as long as the triggering unit is not locked. The triggering unit then has to be locked under menu item "Lock".

```
< Vehicle type:
XXXXXXXXXXXXXXXXXXXX ③
Data record version:
10 (hex)                  >
```

③ 911 Carrera (993) or
unknown

```
< Equipment:
XXXXXXXXXXXXXXXXXXXX ④
Buckle:
XXXXXXXXXXXXXX ⑤          >
```

④ Driver/passenger or
unknown or
driver

⑤ activated or
not activated

```
< Seat occupancy:
XXXXXXXXXXXXXX ⑥
Child seat occupancy:
XXXXXXXXXXXXXX ⑦          >
```

⑥ activated or
not activated

⑦ activated or
not activated

```
< Belt tensioner:
XXXXXXXXXXXXXX ⑧

return:                   N
```

⑧ activated or
not activated

Note

The belt buckle, seat occupancy detection and belt tensioner should **not be activated**, as otherwise faults will be stored in the fault memory.

Changing the coding

Under the menu item "Changing the coding", you can adapt the airbag triggering unit to the vehicle equipment.

The following equipment versions can be coded:

```
Changing the coding
1 = Driver/passenger
2 = Buckle
3 = Seat occupancy     >
```

```
< Changing the coding
1 = Child seat occupancy
2 = Belt tensioner
```

The following messages appear after selection of the corresponding equipment version:

```
Driver/passenger
1 = * Driver/passenger
2 =   Driver
return                N
```

```
Buckle
1 =   active
2 = * not active
return:               N
```

```
Seat occupancy
1 =   active
2 = * not active
return:               N
```

```
Child seat occupancy
1 =   active
2 = * not active
return:               N
```

```
Belt tensioner
1 =   active
2 = * not active
return:               N
```

Note

The asterisk shows the currently coded version.

80 01

Diagnosis / Troubleshooting

Heater System

System H 05 / H 06

Contents

	Page
General information	80 - 3
Menu (Overview of available menus)	80 - 4
Component layout	80 - 5
Operation of individual components	80 - 6
System description	80 - 8
Tools	80 - 10
Connector pin assignment of heater /A/C regulator	80 - 11
Fault memory (Overview of available displays)	80 - 13
Fault overview	80 - 15
Drive links	80 - 23
Input signals	80 - 24
Actual values	80 - 25

General information

System H 05: Heater control

System H 06: A/C control

Canceling the diagnostics

The diagnostic operation is canceled or cannot be started, respectively, if the following conditions are present:

1. Vehicle speed > 0 km/h
2. Right-hand mixing chamber temperature > 80° C
3. Left-hand mixing chamber temperature > 80° C
4. Rear fan temperature > 95° C
5. Oil temperature > 105° C

Coasting shutoff

Coasting shutoff in the DME is prevented if the temperature mixing flaps are more than 90% open.

Fault memory

Fault not present

If "Fault not present" is displayed, this may be caused by a poor terminal connection. If this is the case, check the fault path for poor connections, clear the fault memory and test drive the vehicle. If the fault occurs again, replace the components affected.
If the fault does not occur again, it may be assumed that it was just an intermittent fault.

Switching on the A/C compressor

The compressor is not switched on until 10 seconds after the A/C system has been switched on.

Switching on the condenser blower

The condenser blower is not switched on until 10 seconds after the A/C system has been switched on.

Menu

Overview of available menus

```
        Menu
1 = Fault memory
2 = Drive links
3 = Input signals      >
```

```
<       Menu
1 = Actual values
```

Fault memory: See page 80 - 13

Drive links: See page 80 - 23

Input signals: See page 80 - 24

Actual values: See page 80 - 25

Component layout

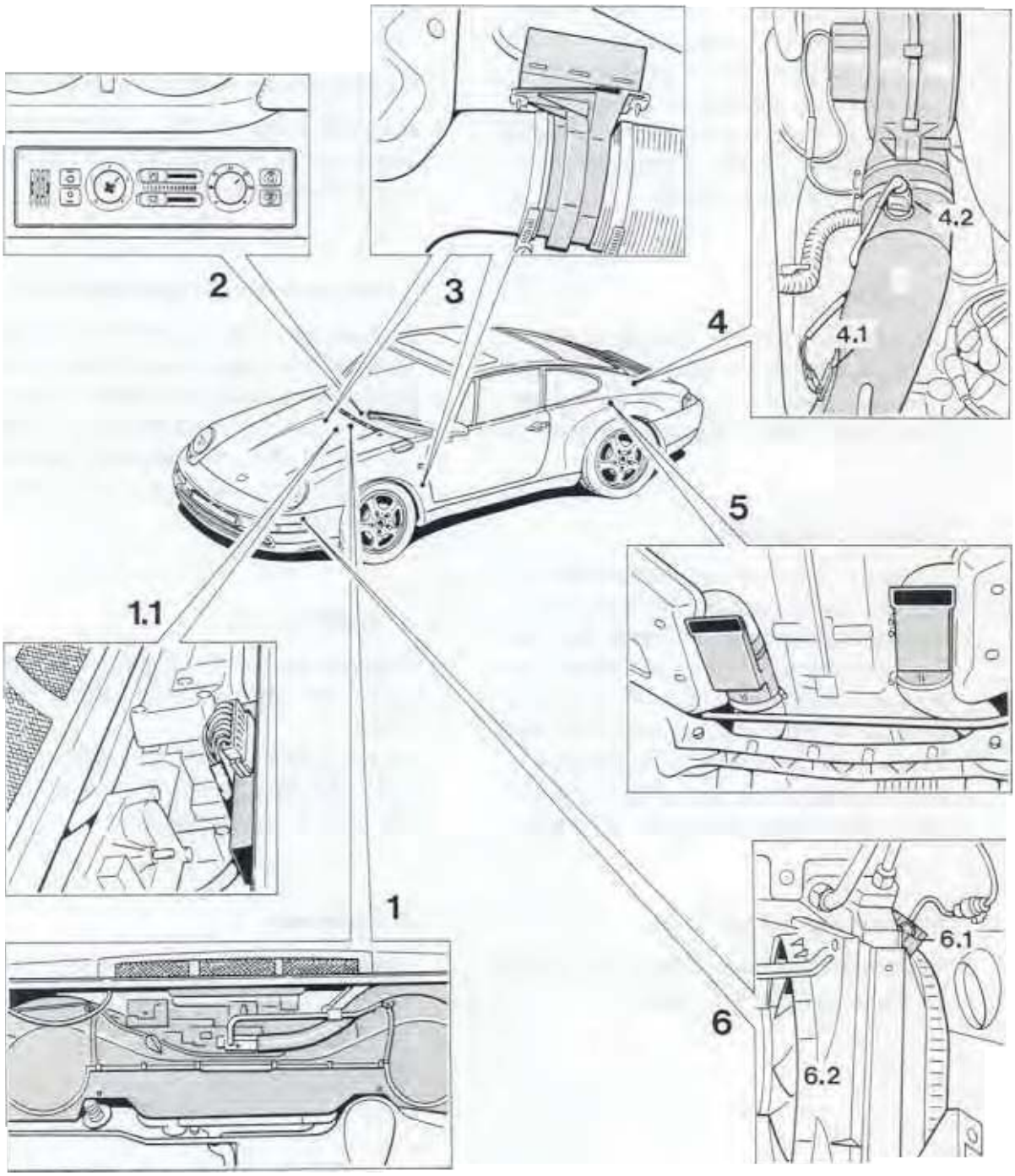

Operation of individual components

1. Heater/ A/C unit

The heater/ A/C unit includes the fresh-air, bypass air, defroster and footwell flaps, the two blowers and particle filters and the evaporator (on vehicles fitted with A/C system). In the heater/ A/C unit, the heating/air conditioning regulator mixes and distributes fresh air, cold air (on vehicles with A/C system) and hot air according to the preset values.

1.1 Final stage

The final stage connects the heater units to ground. Ground signals are clocked with a frequency of 30 Hz. The speed of the heater blowers is determined by the pulse-to-pause ratio.

2. Heater/ A/C regulator

The heater /A/C regulator includes the closed-loop and open-loop control electronics, the interior sensor complete with blower as well as a number of potentiometers and switches that are used to actuate the flaps. The heater/ A/C regulator controls the setting of the individual flaps in accordance with the temperature preset at the potentiometer, interior temperature, vehicle speed and hot air temperature.

3. Temperature mixing flaps

The temperature mixing flaps are used to control the supply (quantity) of hot air.

4. Auxiliary blower

At low engine speeds, the auxiliary blower ensures supply of sufficient air and provides a resistance at higher engine speeds. This produces an air mass map that facilitates temperature control.

4.1 Temperature sensor for auxiliary blower

A variable resistor (NTC) used to detect the engine cooling air temperature. It is used to control the auxiliary blower.

4.2 Series resistor for auxiliary blower

Reduces the blower speed of the first stage. A built-in bimetal fuse protects the series resistor against overloads. If the bimetal fuse is triggered, a restart interlock prevents overloading the resistor after it has cooled off. This allows the cause for any overload, e.g. a binding blower, to be detected.

5. Heater flap box

Excess hot air that is not required is evacuated to the outside across the heater flap boxes.
To keep exhaust fumes from entering the system, the outlet openings are fitted with rubber flaps that close automatically.

6. Condenser

Transforms the gaseous refrigerant into a fluid state.

Printed in Germany – VI.1994

6.1 Condenser blower

This blower is used to cool down the refrigerant.

6.2. Series resistor for condenser blower

Reduces the blower speed of the first stage.

Printed in Germany – VI 1994

System description

The heater/ A/C unit is located in the front end of the vehicle. The heater/ A/C unit is used to mix fresh air, cold air (for vehicles fitted with M 573) and hot air in one left and right-hand blower each and to distribute it across air ducts. The use of one left-hand and one right-hand blower is dictated by the horizontally opposed engine design with heat exchangers on the left and right vehicle sides. The hot air is supplied towards the front to the blowers in the heater/ A/C unit across one left and one right-hand heater duct.
The blowers are located on the intake side.
The fresh-air inlet of the heater/ A/C unit is fitted with one speed-dependent fresh-air mixing flap and one fresh-air flap controlled by the blower stage setting. Both the left and the right heater ducts in the footwell are fitted with one temperature mixing flap each. With the exception of the bypass air flap, all flaps are controlled by electrical servo motors and linkages.

Hot air treatment

The air is aspirated by the engine cooling fan across the air inlet grille at the engine compartment lid and is then supplied to the heat exchangers by a downstream (electrical) auxiliary blower. The air that is preheated when it passes the cylinder surface is heated further inside the heat exchangers.
To prevent excessive heat buildup in the sill area in the summer period, the hot air is evacuated to the outside across heater flap boxes that are controlled by differential pressure.
To avoid drawing in exhaust fumes when driving in reverse, the temperature mixing flaps are moved to the"max. cold" position when reverse is engaged.

Heater / A/C regulator

The entire electronic regulating system is built into the heater/ A/C regulator. Temperature sensors detect the temperatures of the exiting air flow and of the interior and compare them to the settings. Modifying the position of the temperature mixing flaps allows the interior temperature to be regulated.
In addition, the heater/ A/C regulator houses the following components:

- Slide potentiometer to control the defroster flap and the footwell flaps
- Rotary potentiometer to control the blower speed
- AC switch for switching on the A/C system (M 573 only)
- Max-AC switch (M 573 only)
- Recirculating air switch
- Defroster switch

Note

The A/C compressor is not activated until 10 seconds after the A/C system has been switched on.

Function of Max-AC switch

- Switching on the A/C system
- Defroster flap closed
- Footwell flaps closed
- Center nozzle open
- Temperature specification set to max. cold setting
- Blower stage 4

If both AC switches are pressed simultaneously, the Max-AC switch takes priority.

Conditions for switching on the auxiliary blower

With the ignition switched on, the auxiliary blower is switched on and off depending on the setting of the temperature mixing flaps. In the heating mode, blower control is dependent on the blower potentiometer:

1st stage - 0,3 to < 2
2nd stage - 2,0 to 4

When the temperature mixing flaps are closed, the system is controlled in accordance with the air temperature at the temperature sensor:

1st stage on: 45° C
off: 40° C

2nd stage on: 62° C
off: 57° C

When the ignition is off, control is dependent on the air temperature at the temperature sensor.

1st stage on: 75° C
off: 70° C

Printed in Germany – VI.1994

Tools

The following tools are required for trouble-shooting:

1. **System Tester 9288 in conjunction with adapter lead 9288/1.**

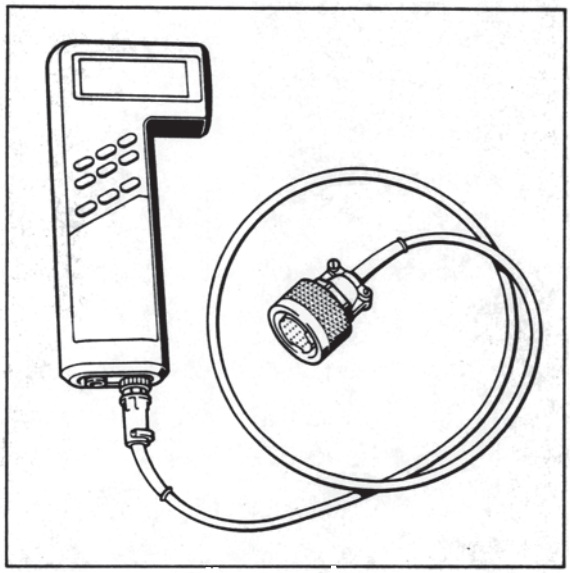

855 - 03

2. **Standard digital multimeter.**

Connector pin assignment of heater/ A/C regulator

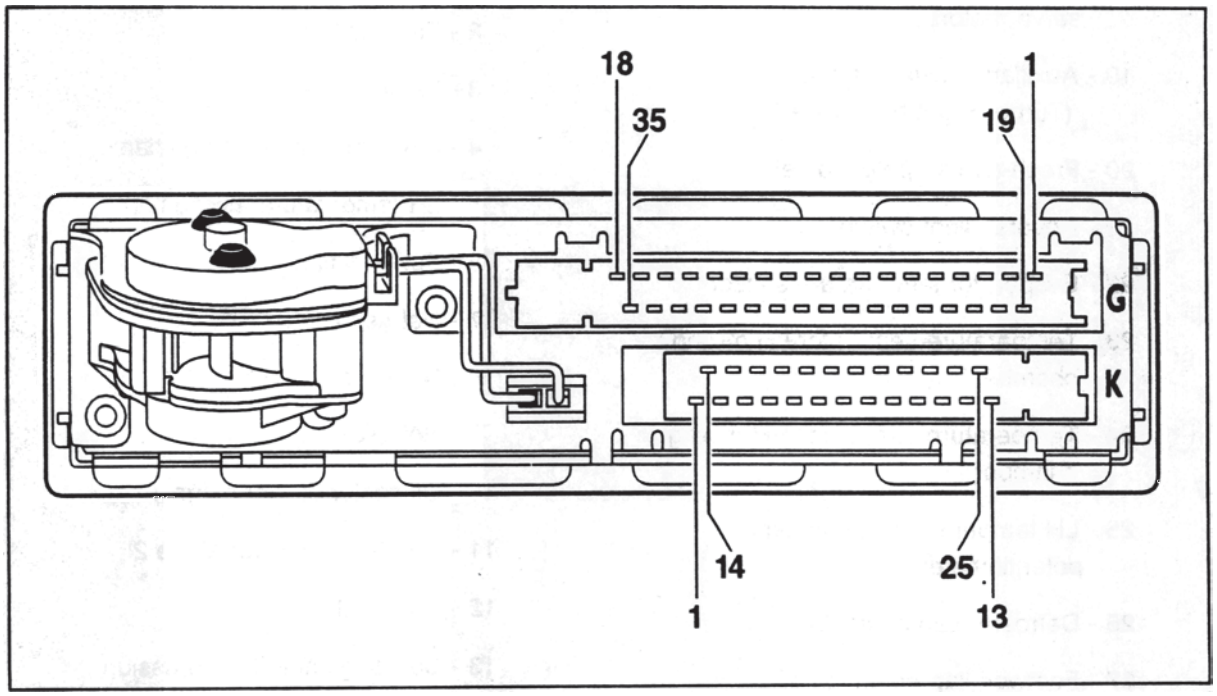

1899 - 80

G Connector

1 - Auxiliary blower diagnosis (Turbo: Left-hand side)*

2 - Not used

3 - Blower final stage diagnosis

4 - Not used

5 - Not used

6 - Not used

7 - Condenser blower diagnosis

8 - RH temperature mixing flap potentiometer

9 - Oil cooler blower diagnosis

10 - Auxiliary blower temperature sensor

11 - Not used

12 - Oil temperature sensor

13 - Positive supply to potentiometer for servo motors

14 - K wire

15 - Speedometer signal

16 - Not used

17 - Terminal 58d

* A jumper between G 1 and G 19 is fitted in the wiring harness of the 911 Carrera.

18 - Ground supply to potentiometer for servo motors

19 - Auxiliary blower diagnosis (Turbo: Right-hand side)*

20 - Fresh-air flap potentiometer

21 - Reverse light switch

22 - Evaporator temperature sensor

23 - Temperature sensor for LH mixing chamber

24 - Temperature sensor for RH mixing chamber

25 - LH temperature mixing flap potentiometer

26 - Defroster flap potentiometer

27 - Footwell flap potentiometer

28 - Not used

29 - Terminal X

30 - Not used

31 - RH blower

32 - L wire

33 - Not used

34 - LH blower

35 - Terminal 15

* A jumper between G 1 and G 19 is fitted in the wiring harness of the 911 Carrera.

K Connector

1 - Terminal 31

2 - Terminal 30

3 - Fresh-air flap

4 - RH temperature mixing flap

5 - LH temperature mixing flap

6 - Footwell flap

7 - Not used

8 - Not used

9 - Not used

10 - Oil cooler blower stage 1

11 - Condenser blower stage 2

12 - Not used

13 - Coasting shutoff suppression

14 - Defroster flap

15 - Defroster flap

16 - Fresh-air flap

17 - RH temperature mixing flap

18 - LH temperature mixing flap

19 - Footwell flap

20 - Auxiliary blower stage 1

21 - Not used

22 - Oil cooler blower stage 2

23 - Condenser blower stage 1

24 - A/C compressor magnetic clutch

25 - Auxiliary blower stage 2

Fault memory

Overview of available displays

```
xx: Inside temp.
sensor
XXXXXXXXXXXXXXXXXXXX
XXXXXXXXXXXX
```

```
xx: Left mixing
chamber temp. sensor
XXXXXXXXXXXXXXXXXXXX
XXXXXXXXXXXX
```

```
xx: Right mixing
chamber temp. sensor
XXXXXXXXXXXXXXXXXXXX
XXXXXXXXXXXX
```

```
xx: Evaporator temp.
sensor
XXXXXXXXXXXXXXXXXXXX
XXXXXXXXXXXX
```

```
xx: Rear blower temp.
sensor
XXXXXXXXXXXXXXXXXXXX
XXXXXXXXXXXX
```

```
xx: Oil cooler temp.
sensor
XXXXXXXXXXXXXXXXXXXX
XXXXXXXXXXXX
```

```
xx: Defroster flap
motor
Signal unplausible
XXXXXXXXXXXX
```

```
xx: Footwell flap
motor
Signal unplausible
XXXXXXXXXXXX
```

```
xx: Fresh-air flap
motor
Signal unplausible
XXXXXXXXXXXX
```

```
XX: Left mixing flap
motor
Signal unplausible
XXXXXXXXXXXX
```

```
XX: Right mixing flap
motor
Signal unplausible
XXXXXXXXXXXX
```

```
XX: Left heater
blower motor
Signal unplausible
XXXXXXXXXXXX
```

```
XX: Right heater
blower motor
Signal unplausible
XXXXXXXXXXXX
```

```
XX: Condenser blower
motor seized
XXXXXXXXXXXX
```

```
XX: Oil cooler blower
motor seized
XXXXXXXXXXXX
```

```
XX: Rear blower motor
- Stage 1 seized
XXXXXXXXXXXX
```

```
XX: Rear blower motor
- Stage 2 seized
XXXXXXXXXXXX
```


Printed in Germany – VI,1994

```
XX: Inside sensor
motor
Signal unplausible
XXXXXXXXXXXX
```

```
XX: Rear blower motor
- Stage 1 seized
XXXXXXXXXXXX
```

```
XX: Rear blower motor
- Stage 2 seized
XXXXXXXXXXXX
```

```
XX: Unknown
fault code
```

Fault overview

Test point	Fault code	Effect of fault	Page
1	—		80 - 16
2	11	Fault memory, replacement value 35° C	80 - 16
3	12	Fault memory, replacement value*	80 - 16
4	13	Fault memory, replacement value*	80 - 16
5	14	Fault memory	80 - 17
6	15	Fault memory**	80 - 17
7	16	Fault memory	80 - 17
8	22	Fault memory	80 - 18
9	23	Fault memory	80 - 18
10	24	Fault memory	80 - 19
11	31	Fault memory	80 - 19
12	32	Fault memory	80 - 20
13	33	Fault memory	80 - 20
14	34	Fault memory	80 - 20
15	41	Fault memory	80 - 21
16	42	Fault memory	80 - 21
17	43/46	Fault memory	80 - 21
18	44/47	Fault memory	80 - 22
19	45	Fault memory	80 - 22
20	XX	Fault memory	80 - 22

If a mixing chamber temperature sensor fails, the value of the remaining sensor is assumed. If both sensors fail, a mixing flap angle of 40 % is pre-set.

Both heater blowers are switched off when the temperature mixing flaps are not in the max. cool position.

Fault, fault code	Possible causes, remedy, notes
Test point 1	
Supply voltage	At heater / A/C regulator K 1 - Terminal 31 K 2 - Terminal 30 G 29 - Terminal X G 35 - Terminal 15 G 17 - Check terminal 58 d (lights).
Test point 2	
Inside temp. sensor Short to ground or open circuit/short to ground or open circuit **Fault code 11**	Replace heater/ A/C regulator.
Test point 3	
Left mixing chamber temp. sensor Short to ground or open circuit/short to ground or open circuit **Fault code 12**	1. Check resistance between G 18 and G 23. Specifications: at 0° C 30.6 to 34.7 kΩ at 25° C 9.5 to 10.5 kΩ at 50° C 3.4 to 3.8 kΩ 2. Ground must be present at G 18 when the connector is connected. 3. G 23 must not be connected to ground.
Test point 4	
Right mixing chamber temp. sensor Short to ground or open circuit/short to ground or open circuit **Fault code 13**	1. Check resistance between G 18 and G 24. Specifications: at 0° C 30.6 to 34.7 kΩ at 25° C 9.5 to 10.5 kΩ at 50° C 3.4 to 3.8 kΩ 2. Ground must be present at G 18 when the connector is connected. 3. G 24 must not be connected to ground.

Fault, fault code	Possible causes, remedy, notes

Test point 5

Evaporator temp. sensor
Short to ground or open circuit/short to ground or open circuit
Fault code 14

1. Check resistance between G 18 and G 22.
   Specifications: at 0° C 8.8 to 9.2 kΩ
   at 25° C 2.6 to 2.9 kΩ
2. Ground must be present at G 18 when the connector is connected.
3. G 22 must not be connected to ground.

Test point 6

Rear blower temp. sensor
Short to ground or open circuit/short to ground or open circuit
Fault code 15

1. Check resistance between G 18 and G 10.
   Specifications: at 0° C 28.8 to 36.4 kΩ
   at 25° C 9.0 to 11.0 kΩ
   at 50° C 3.1 to 4.0 kΩ

Note

The wires from the heating/ A/C regulator to the temperature sensor are routed across two connectors (X 3 and X 20).

2. Ground must be present at G 18 when the connector is connected.
3. G 10 must not be connected to ground.

Test point 7

Oil cooler temp. sensor
Short to ground or open circuit/short to ground or open circuit
Fault code 21

1. Check resistance between G 18 and G 12.
   Specifications: at 60° C 3.6 to 4.0 kΩ
   at 85° C 1.4 to 1.6 kΩ
   at 100° C 0.9 to 1.0 kΩ
2. Ground must be present at G 18 when the connector is connected.
3. G 12 must not be connected to ground.

Printed in Germany – VI 1994

Fault, fault code	Possible causes, remedy, notes
Test point 8 Defroster flap motor Signal unplausible **Fault code 22**	1. Check voltage at fitted connector between G 13 (positive) and G 18 (negative). Specification: approx. 5 Volts. If no voltage is present, replace heater/ A/C regulator. 2. Check voltage at fitted connector between G 26 (positive) and G 18 (negative). Specification: approx. 0.2 to 5 Volts, depending on motor position. 3. Check wires G 13, G 18 and G 26 from heater/ A/C regulator to servo motor for open circuit and wires G 13 and G 26 for short to ground. 4. Check wires K 14 and K 15 from heater/ A/C regulator to servo motor for open circuit, short to ground and short to positive.
Test point 9 Footwell flap motor Signal unplausible **Fault code 23**	1. Check voltage at fitted connector between G 13 (positive) and G 18 (negative). Specification: approx. 5 Volts. If no voltage is present, replace heater/ A/C regulator. 2. Check voltage at fitted connector between G 27 (positive) and G 18 (negative). Specification: approx. 0.2 to 5 Volts, depending on motor position. 3. Check wires G 13, G 18 and G 27 from heater/ A/C regulator to servo motor for open circuit and wires G 13 and G 27 for short to ground. 4. Check wires K 6 and K 19 from heater/ A/C regulator to servo motor for open circuit, short to ground and short to positive.

Fault, fault code	Possible causes, remedy, notes
Test point 10	
Fresh-air flap motor Signal unplausible **Fault code 24**	Check voltage at fitted connector between G 13 (positive) and G 18 (negative). Specification: approx. 5 Volts. 2. Check voltage at fitted connector between G 20 (positive) and G 18 (negative). Specification: approx. 0.2 to 5 Volts, depending on motor position. 3. Check wires G 13, G 18 and G 20 from heater/ A/C regulator to servo motor for open circuit and wires G 13 and G 20 for short to ground. 4. Check wires K 3 and K 16 from heater/ A/C regulator to servo motor for open circuit, short to ground and short to positive.
Test point 11	
Left mixing flap motor Signal unplausible **Fault code 31**	1. Check voltage at fitted connector between G 13 (positive) and G 18 (negative). Specification: approx. 5 Volts. If no voltage is present, replace heater/ A/C regulator. 2. Check voltage at fitted connector between G 25 (positive) and G 18 (negative). Specification: approx. 0.2 to 5 Volts, depending on motor position. 3. Check wires G 13, G 18 and G 25 from heater/ A/C regulator to servo motor for open circuit and wires G 13 and G 25 for short to ground. 4. Check wires K 5 and K 18 from heater/ A/C regulator to servo motor for open circuit, short to ground and short to positive.

Printed in Germany – VI.1994

Fault, fault code	Possible causes, remedy, notes
Test point 12 Right mixing flap motor Signal unplausible **Fault code 32**	1. Check voltage at fitted connector between G 13 (positive) and G 18 (negative). Specification: approx. 5 Volts. If no voltage is present, replace heater/ A/C regulator. 2. Check voltage at fitted connector between G 8 (positive) and G 18 (negative). Specification: approx. 0.2 to 5 Volts, depending on motor position. 3. Check wires G 8, G 13 and G 18 from heater/ A/C regulator to servo motor for open circuit and wires G 8 and G 13 for short to ground. 4. Check wires K 4 and K 17 from heater/ A/C regulator to servo motor for open circuit, short to ground and short to positive.
Test point 13 Left heater blower motor Signal unplausible **Fault code 33**	**Note** The blower final stage is monitored for excessive temperatures. The blowers are not monitored separately. 1. Check if blower final stage is securely bolted to the aluminium cooling panel. 2. Check if blower motor has seized mechanically.
Test point 14 Motor Right heater blower Signal unplausible **Fault code 34**	Refer to Test point 13.

Fault, fault code	Possible causes, remedy, notes
Test point 15 Condenser blower motor seized **Fault code 41**	1. Check voltage at condenser blower relay at term. 30 and term. 30 C. 2. Check if motor has seized mechanically. 3. Check wiring from relay term. 87 to blower motor for open circuit and short to ground. 4. Check wiring from blower motor to heater/ A/C regulator G 7 for open circuit and short to ground. 5. Check activation of relay according to wiring diagram.
Test point 16 Oil cooler blower motor seized **Fault code 42**	1. Check voltage at oil cooler blower relay term. 30 and term. 30 C. 2. Check if engine has seized mechanically. 3. Check wire from relay term. 87 to blower motor for open circuit and short to ground. 4. Check wire from blower motor to heating/ A/C regulator G 9 for open circuit and short to ground. 5. Check activation of relay according to wiring diagram.
Test point 17 Rear blower motor - Stage 1 seized **Fault code 43/46**	1. Check voltage at rear blower relay term. 30 and term. 30 C. 2. Check if engine has seized mechanically. 3. Check triggering of relay according to wiring diagram. 4. Check wire from relay term. 87 C to motor for continuity and short to ground. 5. Check ballast resistor (Ballast resistor with restart interlock feature; see page 80 - 1, Vol. 6). 6. Check wires from motor to heater/ A/C regulator G 1 and G 19 for open circuit and short to ground.

Printed in Germany – VI 1994

Fault, fault code	Possible causes, remedy, notes
Test point 18 Rear blower motor - Stage 2 seized **Fault code 44/47**	1. Check voltage at rear blower relay term. 30 and term. 30 C. 2. Check if engine has seized mechanically. 3. Check activation of relay according to wiring diagram. 4. Check wire from relay term. 87 to motor for continuity and short to ground. 5. Check wires from motor to heater/ A/C regulator G 1 and G 19 for open circuit and short to ground.

Note on test point 17/18

The 911 Turbo is fitted with 2 rear blowers. Fault codes 43 and 44 refer to the right-hand blower, codes 46 and 47 refer to the left-hand blower. Since the same heater/ A/C regulator is fitted to the 911 Carrera, pins G 1 and G 19 are jumpered in the wiring harness of this model. For this reason, a fault in the rear blower causes both fault codes, i.e. 43 and 46 or 44 and 47, to be displayed on the 911 Carrera.

Test point 19 Inside sensor motor Signal unplausible **Fault code 45**	1. Check voltage at connector housing. 2. Check if motor has seized mechanically.
Test point 20 Unknown fault code **Fault code XX**	1. Check secondary side of ignition system. 2. Clear fault memory.

Drive links

Drive links menu

```
Drive links
1 = Left mixing flap
2 = Right mixing flap
3 = Defroster flap    >
```

```
< Drive links
1 = Footwell flaps
2 = Fresh-air flap
3 = Rear blower       >
```

```
< Drive links
1 = Left heater blower
2 = Right heater blower
3 = Oil cooler blower >
```

```
< Drive links
1 = Condenser blower*
2 = Air-condit. test*
```

* Only on system H 06.

Operation of the servo motors controlling the flaps and the blower motors, respectively, is indicated via a bar chart (except for heater blower where operation is detected by blower noise).
An important indicator of servo motor operation is that the bar chart display changes, i.e. the flaps must move from the open to the closed and from the hot to cold positions (and vice versa).

When performing the air conditioning test, make sure that the evaporator temperature drops below 5°C. If a test is not possible, check operation of the left and right mixing flaps and of the condenser blower.

Input signals

Input signals menu

```
Input signals
1 = Footwell
2 = Defroster
3 = Blower              >
```

```
< Input signals
1 = Temperature
2 = Air circulation
3 = Defroster           >
```

```
< Input signals
1 = AC*
2 = AC MAX*
```

* Only on system H06.

Potentiometer operation is displayed on a bar chart.

Changing the position of the potentiometers: The bar chart display must increase and decrease, respectively.

Switch operation is indicated by the open and closed positions, respectively.

Switch not pressed: open.
Switch pressed: closed.

Actual values

Actual values menu

```
Actual values
1 = Voltage Term. X
2 = Inside temperature
3 = Rear temperature  >
```

```
< Actual values
1 = Lt. mixing temp.
2 = Rt. mixing temp.
3 = Oil temperature   >
```

```
< Actual values
1 = Evaporator temp.*
```

* Only on system H06.

The Actual values menu option allows the above voltage and temperature settings to be called up and read off directly.

90 0 1

Diagnosis / Troubleshooting

Alarm System

System I 00

System I 01

Printed in Germany - 12_1995

Contents

	Pa
System description	90 - 3
Component layout	90 - 5
Functions of individual components	90 - 6
Tools	90 - 7
Pin assignment of control unit	90 - 8
Fault memory (overview of possible displays)	90 - 9
Fault overview	90 - 11
Drive link actuation	90 - 16
Input signals	90 - 20
Country coding (I 00)	90 - 25
Country coding (I 01)	90 - 26
Result memory	90 - 27
System check	90 - 28
Remote Control (I 01)	90 - 29
Vehicle type (I 01)	90 - 30

System description

Alarm system with integral Central Locking System

The 911 Carrera (993) is fitted with a diagnosable alarm system that incorporates the central locking feature, the delayed switchoff of the interior lights and an anti-drive-off feature.

The alarm system is activated by:

1. Locking a door.
2. Locking one of the door locks three times in rapid sequence.

After arming the alarm system, the operation of all actuation circuits is checked. If no fault is detected, this condition is indicated by rapid flashing of the alarm readiness lamps (approx. 10 seconds).

After approx. 10 seconds all actuation circuits are armed. Slow flashing of the alarm readiness lamps indicates this condition.

If a fault condition is detected, the LEDs do not flash during the check period (approx. 10 seconds).

This may be due to the following fault conditions:

- Vehicle doors not closed
- Vehicle doors not locked
- Hood not closed
- Luggage compartment lid not closed
- Glove compartment lid not closed
- Rear parcel shelf not closed (if fitted)
- Radio not fitted correctly

Only those activation circuits that are not faulty are armed after the check has been terminated. A fault condition is displayed by double flashing after the check has been terminated. If an alarm has been triggered, this is also indicated by double flashing.

Three different alarm types preadjusted according to the country specifications are provided in the control unit. When replacing the control unit, the country-specific coding must be reestablished with System Tester 9288.

Central Locking System

The Central Locking System covers the driver and passenger doors. The key may be used to lock and unlock the driver and passenger doors. The locking status of the vehicle is indicated by the flashing code of the alarm readiness lamps.

When the ignition is switched off, the central locking button in the center console may be used to lock the doors only. Wit the ignition on, it may be used to lock and unlock the doors. When the driver's door is open, the doors cannot be locked.

Time-delay circuit of the interior lights

The interior lights are no longer controlled directly via the door contacts. The interior lights are switched on:

1. By unlocking the doors.

2. By locking the doors.

The lights continue to be lit for approx. 20 seconds.

The interior lights are switched off (doors closed):

1. When the ignition is switched on.

2. When the doors are locked.

Anti-drive-off feature

The anti-drive-off feature is activated when the alarm system is armed. If an alarm is triggered, terminal 15 for the DME control unit is interrupted and the ignition and injection systems are disabled.

Component layout

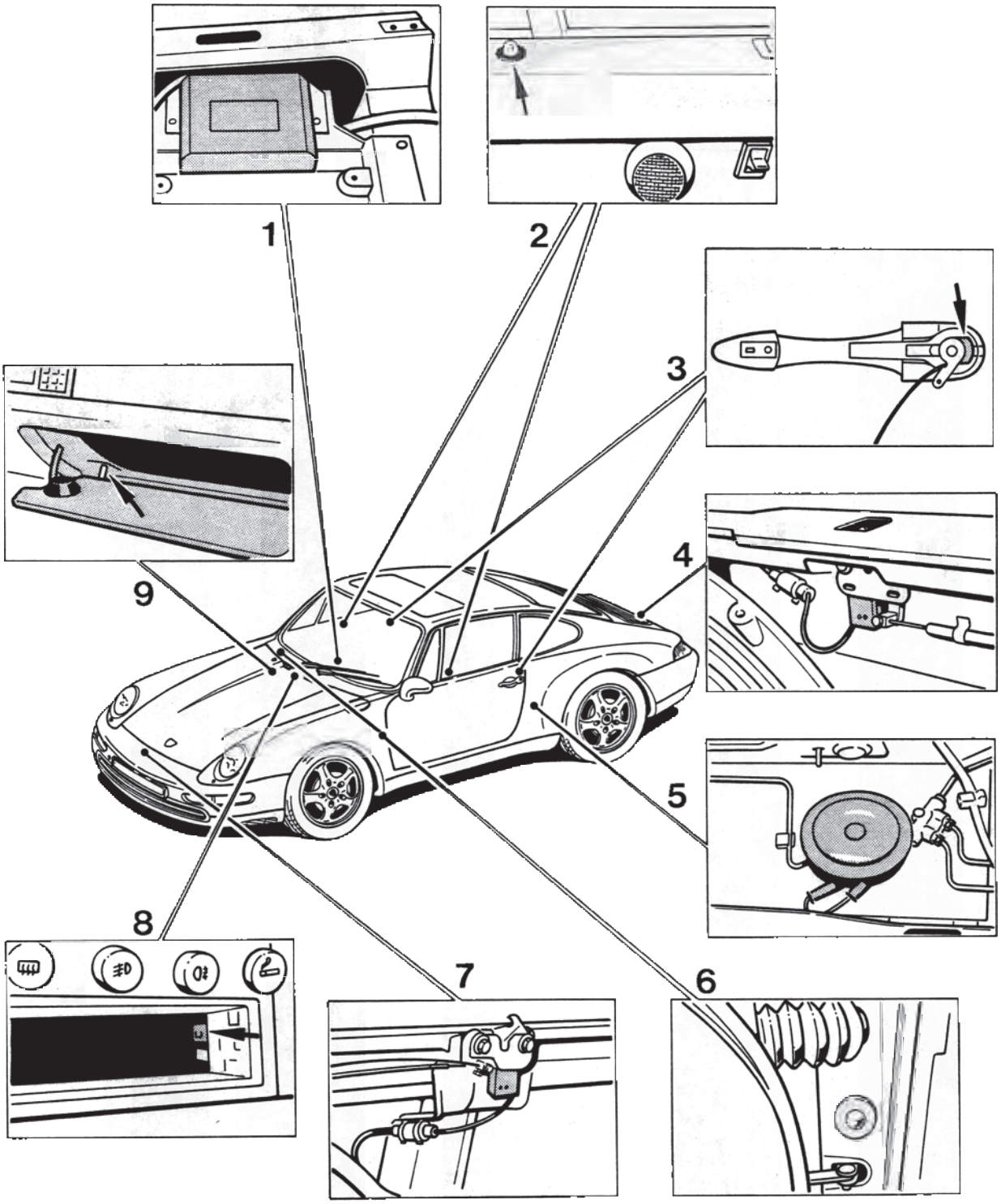

```
Radio
(closed curr. loop)
interrupted
during activation
```

```
Radio contact
to ground
during activation
```

Fault memory

Overview of possible displays

Control unit faulty	Glove comp. open during activation
Voltage failure term. 30 with active alarm system	Input 2 to ground during activation
Voltage failure during alarm output	Central Locking System button closed during activation
Position of the drives unplausible	Input 1 to ground during activation
Doors(s) open during activation	Input 3 to plus during activation
Engine comp. open during activation	Position switch on drive closed during activation
Luggage comp. open during activation	Position switch on drive open during activation

Fault, Fault code	Possible causes, remedies, notes

Note

The fault memory **must** be erased whenever a fault in the alarm system has been remedied.

Test point 1

Control unit faulty Fault code 11	Replace control unit.

Test point 2

Voltage failure term. 30 with active alarm system Fault code 12	Check battery. Check fuse at control unit. Check wiring according to wiring diagram.

Test point 3

Voltage failure during alarm output Fault code 13	Refer to test point 2.

Test point 4

Position of the drives implausible Fault code 14	This fault is also stored if, for example, the driver's door is open when the key is used to actuate the central locking system from the passenger's door. Check position switch at drive link: 1. Disconnect connections X 11/1 (driver's side) and X 12/1 (passenger's side). Use a jumper wire to connect terminal 1 to ground on pin side. Use an ohmmeter to check terminal 4 and terminal 6 (pin side) for continuity to ground. Continuity to ground (0 - 5 Ω) at terminal 4, if door is locked. Continuity to ground (0 - 5 Ω) at terminal 6, if door is unlocked. If no continuity is displayed, disconnect connection at drive link. 2. Use an ohmmeter to check for continuity from terminal 3 to terminal 2 and from terminal 3 to terminal 4. Continuity from terminal 3 to terminal 2 if door is locked. Continuity from terminal 3 to terminal 4 if door is unlocked.

Fault overview

Test point	Fault code	Result of fault	Page
1	11	Fault memory	90 - 12
2	12	Fault memory	90 - 12
3	13	Fault memory	90 - 12
4	14	Fault memory	90 - 12
5	15	Fault memory	90 - 13
6	16	Fault memory	90 - 13
7	17	Fault memory	90 - 13
8	18	Fault memory	90 - 14
9	19	Fault memory	90 - 14
10	20	Fault memory	90 - 14
11	21	Fault memory	90 - 14
12	22	Fault memory	90 - 14
13	23	Fault memory	90 - 15
14	24	Fault memory	90 - 15
15	25	Fault memory	90 - 15
16	26	Fault memory	90 - 15

Fault, Fault code	Possible causes, remedies, notes
Test point 8 Glove compartment open during activation Fault code 18	– Check glove compartment switch and glove compartment lamp for short to ground. – Check control unit to glove compartment switch wire for short to ground.
Test point 9 Input 2 to ground during activation Fault code 19	Note Fault symptoms may appear if auxiliary systems (e.g. interior monitor) have been fitted. – Check auxiliary system of input 2. – Using Special Tool 9540, check wiring from control unit connector II, terminal 8, to the auxiliary system for short to ground. – Check auxiliary system wiring for short to ground.
Test point 10 Central locking system button closed during activation Fault code 20	– Check central locking system button. Using Special Tool 9540, check wiring from control unit connector II, terminal 11, to button for short to ground.
Test point 11 Input 1 to ground during activation Fault code 21	– Check auxiliary system of input 1. Note On vehicles fitted with rear parcel shelf (Cabriolet) instead of the occasional seats, the contacts of the rear parcel trays are wired to this input. Using Special Tool 9540, check wire from control unit connector II, terminal 7, to auxiliary system for short to ground.
Test point 12 Input 3 to positive during activation Fault code 22	– Check auxiliary system of input 3. – Using Special Tool 9540, check wiring from control unit connector II, terminal 17, to auxiliary system for short to positive.

Fault, Fault code	Possible causes, remedies, notes
	Check connection from X 11/1 terminal 4 to X 12/1 terminal 4 for continuity. Check connection from X 11/1 terminal 6 to X 12/1 terminal 6 for continuity. Check connection from X 11/1 terminal 4 to control unit connector II terminal 12 for continuity. Check connection from X 12/1 terminal 6 to control unit connector II terminal 10 for continuity. Check triggering of drive links (actuators). Connectors X 11/1 and X 12/1, terminal 8 and terminal 10, must be grounded in the quiescent state. Positive voltage must be present at terminal 8 if the drive link is triggered in the "open" position. Positive voltage must be present at terminal 10 if the drive link is triggered in the "closed" position. Note The drive links are triggered for a few milliseconds only. Check wirings from control unit connector I terminal 11 and terminal 12 to the drive links for continuity.
Test point 5 Door(s) open during activation Fault code 15	Check LH and RH door contact switches for short to ground. Check wiring for short to ground according to wiring diagram.
Test point 6 Engine compartment open during activation Fault code 16	Check engine hood switch and engine compartment lamp for short to ground. Check control unit to engine compartment lamp wire for short to ground.
Test point 7 Luggage compartment open during activation Fault code 17	Check trunk lid switch and luggage compartment lamp for short to ground.

Printed in Germany – III.1993

Drive links

This function allows the following components to be triggered:

Function display in lock buttons

Lock

Alarm horn

Turn signals

Interior light

Button light in central locking system button

External output

Anti-drive-off feature

```
Function display
1 = on
3 = off
Return :          N
```

If the function display is turned on, the doors are locked and the LEDs light up permanently. The „on" display flashes on the tester.
If the function display is turned off again, the LEDs are turned off as well. The doors are unlocked again when the user returns to the menu.

```
Lock
1 = closed
3 = open
Return:           N
```

Lock closed: Doors are locked.
Lock open: Doors are unlocked.

```
Alarm horn
1 = on
3 = off
Return:           N
```

Alarm horn on: Alarm horn is triggered continuously (continuous sound).

```
Turn signals
1 = on
3 = off
Return:           N
```

Turn signals on: All turn signals are triggered continuously (continously lit).

```
Interior light
1 = on
3 = off
Return:           N
```

The interior light must be in the door contact position.

```
Button light
1 = on
3 = off
Return:           N
```

Button light on: The light in the central lock system button is triggered.

Printed in Germany – III,1993

```
External output
1 = on
3 = off
Return:          N
```

The external output is used to trigger other control units, e.g. ultrasonic monitoring of the interior.

```
Anti-drive-off feature
1 = on
3 = off
Return:          N
```

Anti-drive-off feature on: Terminal 15 of the DME control unit is interrupted. It must no longer be possible to start the engine.

Possible fault displays

1

```
No activation
Door(s) open !

Return:              N
```

– Close doors

– Check door contact wires to alarm control unit plug II terminal 21 for short to ground.

2.

```
No activation
Engine running!

Return:              N
```

– Turn off engine, only switch on ignition.

3.

```
No response
Signal unplausible !

Return               N
```

– Replace control unit.

4.

```
No activation
Fault summary!

Return:              N
```

Note

Fault summary is displayed if several drive links (actuators) are triggered simultaneously, e.g. if turn signals are on while the function display is checked.

Check wiring to control unit plug I, terminals 8, 9, 10, 11, 12, and plug II, terminal 20, for short to positive.

Check wiring to control unit plug II, terminal 24 (if connected) and terminal 7, for short to ground.

5.

```
No activation
Fault summary !
Position switch ?
Return:              N
```

– Refer to item 4.

Also check position switch (refer to page 90- 12).

6.

```
Activation
correct.
Position switch?
Return:              N
```

– Check position switch (refer to page 90 - 12).

Printed in Germany – III,1993

7.

```
No response
Signal unplausible !
Position switch ?
Return:                N
```

– Check position switch
  (refer to page 90 - 12).

– Replace control unit.

8.

```
Unknown
response code!

Return:                N
```

Check following ground points:

1. MP X: Battery to body
2. MP XI: Body to transmission
3. MP XX: Body to alarm control unit

Printed in Germany – III,1993

Input signals

This function allows the following input signals to be checked:

Door contacts

Engine hood switch

Luggage compartment switch

Position switches at drive motors

Central locking system button

Glove compartment button

Radio closed loop

Alarm contact radio bracket

Microswitch for activation of alarm

Microswitch for deactivation of alarm

Input 1 (auxiliary system)

Input 2 (auxiliary system)

Input 3 (auxiliary system)

Speedo signal

Term. 15

Term. 61

1

```
Door(s)

- open -
Return:                N
```

Open is displayed if at least one door is open. Closed is displayed if both doors are closed. If required, check wiring to control unit for open circuit or short to ground according to wiring diagram.

2.

```
Engine compartment

- open -
Return:                N
```

Open is displayed if engine hood is open. Closed is displayed if engine hood is closed. If required, check wiring to alarm control unit for open circuit or short to ground according to wiring diagram.

Printed in Germany – III,1993

3.

```
Luggage compartment

- open -
Return                N
```

Open is displayed if hood is open. Closed is displayed if hood is closed. If required, check wiring to alarm control unit for open circuit or short to ground according to wiring diagram.

4.

```
Position switch
open: - closed -
closed:  - open -
Return                N
```

This display appears if doors are unlocked.

4a.

```
Position switch
open: - open -
closed:  - closed -
Return:               N
```

This display appears if doors are locked. If required, check position switch (refer to page 90 - 12)

5.

```
Central locking
system button
-  open -
Return:               N
```

Open is displayed if the central locking system button has not been pressed down. Closed display appears if the central locking system button is pressed down.

6.

```
Glove compartment

- open -
Return:               N
```

Open is displayed if glove compartment is open. Closed is displayed if glove compartment is closed.

7.

```
Radio
(closed loop)
- closed -
Return:               N
```

The closed-current loop must be closed. The contact is wired to ground across the alarm horn.

If the closed-current loop is open, check wire from control unit connector II, terminal No. 13, to alarm horn for continuity.

Check ground connection of alarm horn.

8.

```
Radio contact

- open -
Return:          N
```

If Radio contact closed is displayed:

Check insulating strip on radio.

Check wiring from control unit plug II, terminal 9, to alarm contact at radio bracket or to alarm contact at CD player for short to ground.

9.

```
Activate
button
- open -
Return:          N
```

Note

The spare key is required for checks according to item 9 and 10 since the ignition must be switched off during the diagnostics.

Use the spare key to turn the locks of the driver's and passenger doors into the „locking" position one after another. The display must then switch from „open" to „closed" („locked").

If „closed 2 ("locked") is displayed in the rest position, check wiring from the lock barrels to the alarm control unit connector II, terminal 1, (terminal 2 for RHD vehicles) for short to ground according to wiring diagram.

If the display remains set to „open" after then lock barrels have been actuated, check wirings for continuity according to wiring diagram.

10.

```
Deactivate
button
- open -
Return:          N
```

Use the spare key to turn the locks of the driver's and passenger doors into the „open" position one after another. The display must then switch from „open" to „closed" („locked").

If „closed" („locked") is displayed in the rest position, check wiring from the lock barrels to the control unit connector II, terminal 2, (terminal 1 for RHD vehicles) for short to ground according to wiring diagram.

If the display remains set to „open" after the lock barrels have been actuated, check wirings for continuity according to wiring diagram.

11.

```
Input 1

- open -
Return:          N
```

Note

On vehicles (Cabriolet) with rear parcel shelf, the contacts of the rear parcel trays are wired to this input.

Display „open" for inputs that are not wired or if the parcel trays are closed (contacts open).

Display „closed" if at least one parcel tray is open (contact closed). If required, check wiring according to wiring diagram.

Printed in Germany – III,1993

12.

```
Input 2

-  open -
Return:              N
```

In standard version, this input is not wired. Auxiliary systems may be wired across this input. Display is „open" if input is not wired. If required, check auxiliary system according to manufacturer's instructions.

13.

```
Input 3

- open -
Return:              N
```

Refer to item 12.

14.

```
Speedo signal

present
Return:              N
```

Display is not present if vehicle is stationary. Display is present if vehicle is moving.
If required, check wiring from control unit plug II, terminal 6, to speedometer according to wiring diagram.

15.

```
Term. 15

present
Return:              N
```

If display is not present, check wire from alarm control unit plug II, terminal 18, to central electrical system according to wiring diagram.

16.

```
Term. 61

present
Return:              N
```

Note

If present is displayed although the engine is not running, this may be due to a summary fault (refer to item 4, Drive links functional group). In this case, start by remedying this fault.
If display is not present although the engine is running, check wire from control unit plug II, terminal 23, to generator according to wiring diagram.

Printed in Germany – III,1993

Country codes (I 00)

The System Tester 9288 may be used to encode three pre-set alarm versions

1. RoW (Rest of world)
2. CH (Switzerland)
3. USA

Alarm output

RoW

Alarm horn max. 30 sec. interval.

Turn signals max. 5 min.

Interior light flashes in an asynchronous manner with turn signals (if in door contact position).

CH

Alarm horn max. 30 sec. continuous.

USA

Alarm horn max. 3 min. interval.

Turn signals max. 4 min.

Interior light flashes in an asynchronous manner with turn signals (if in door contact position).

Alarm system encoding

When replacing the control unit, activate one of the preset country codes according to the national C number.

RoW

C numbers: 00, 05, 07, 09, 11, 12, 13, 14, 16, 17, 19, 20, 21, 22, 27, 28, 99.

C number: 10.

C numbers: 02, 04, 06, 08, 15, 18, 23, 24, 26, 31, 32, 36.

```
Country code
RDW      PORSCHE      *
1 = coding
Return:               N
```

The Country code menu displays the coded version in the top left corner, e.g. RoW; the center displays Porsche or Workshop, depending on where the system has been coded. The asterisk on the right is displayed for versions that include the interior lights in the alarm emission.

Country codes (I 01)

The System Tester 9288 may be used to encode three pre-set alarm versions

1. RoW (Rest of world)
2. CH (Switzerland)
3. USA

Alarm output

Country group 1

Alarm horn max. 30 sec. interval.

Turn signals max. 5 min.

Interior light flashes in an asynchronous manner with turn signals (if in door contact position).

Country group 2

Alarm horn max. 30 sec. continuous.

Country group 3

Alarm horn max. 3 min. interval.

Turn signals max. 4 min.

Interior light flashes in an asynchronous manner with turn signals (if in door contact position).

Alarm system encoding

When replacing the control unit, activate one of the preset country codes according to the national C number.

County group 1

C numbers: 00, 05, 07, 09, 11, 12, 13, 14, 16, 17, 19, 20, 21, 22, 27, 28, 99.

Country grooup 2

C number: 10.

USA

C numbers: 02, 04, 06, 08, 15, 18, 23, 24, 26, 31, 32, 36.

```
Country code
RDW     PORSCHE        *
1 = coding
Return:                N
```

The Country code menu displays the coded version in the top left corner, e.g. RoW; the center displays Porsche or Workshop, depending on where the system has been coded. The asterisk on the right is displayed for versions that include the interior lights in the alarm emission.

For pressing, press key 1:

```
1 = Country group   1
2 = country group   2
3 = country group   3
Return              N
```

A selection of country groups then appears. To set the group required, press the appropriate key.

Result memory (I 01)

The result memory registers triggering of an alarm, the contact that triggered the alarm as well as the type of activation. A maximum of 10 results may be stored. If another result is stored, the oldest result stored is deleted. The result with the highest number is the most up-to-date result.
Alarms may be triggered by contacts at the following components:

Doors

Engine compartment

Luggage compartment

Glove compartment

Radio

Additional alarm triggering options:

Term. 15 on after system has been activated

Signal to input 1

Signal to input 2

Signal to input 3

Position switch

Open circuit of closed loop

Note

Up to three alarms may be triggered across input 2.

The following types of activation are to be distinguished:

normal, i.e. locking the doors with the key, thus activating the central locking system

locking three times, i.e. locking one of the door locks rapidly for three consecutive times

System check

The type of activation may be invoked with button 1 on the below display:

```
Alarm:              - x -
activated by
xxxxxxxxxxxxxx
```

Note

Erase the result memory whenever the alarm system has been checked.

System check

The System check menu item may be used to check all components triggering an alarm (except Term. 15). In this case, the alarm horn is only triggered twice for a short interval.

The following display appears after the System check menu item has been called:

```
System check !

Continue:          >
```

The individual components that may trigger an alarm (except Term. 15) can now be checked. E.g. if a door is opened, an alarm is triggered. At the same time, triggering of the alarm is stored in the result memory. After the check has been completed and the > key has been pressed, the following display appears:

```
Note:
Erase result
memory !
Return:            N
```

The result memory **must** be erased since the check has been stored in the memory.

Remote control

Only I 01

Using the system tester, it is possible to set the alarm system in accordance with the equipment installed and legislation in the countries concerned.

In the case of vehicles without immobilizer and therefore also without remote control units, the alarm system must be set to "remote control off".

In the case of vehicles with immobilizers, the alarm system must be encoded in accordance with the C number of the country.

For the following C numbers, the alarm system must be set to "remote control on":
00, 05, 06, 07, 08, 09, 10, 11, 12, 13, 14, 15, 16, 17, 18, 19, 20, 21, 22, 26, 27, 28, 31, 32 and 99.

For the following C numbers, the alarm system must be set to "remote control on light flashing":
02, 23, 24 and 36.

```
      Remote control
On        Workshop   *
1=set
return:                N
```

The status which has been set (on or off) appears at the top left of the display. Either Porsche or workshop appears in the center, depending on where the setting was made. The asterisk at the right appears if the setting "remote control on light flashing" has been selected.

To select a setting, press key 1

```
1=on
2=flash. lights on
3=off
return:                N
```

The settings which are available are displayed. To make the setting, press the appropriate key.

Note

If the setting "remote control flashing lights on" is selected, the lights flash twice as confirmation after the vehicle has been locked.

After the vehicle has been unlocked, the lights flash once.

As this status indication is not permitted in some countries. The alarm system should be set in accordance with the C number, as indicated above.

Vehicle type

Only I 01

Only control units with software version I 01 are available as spare parts.

When the alarm control unit has been replaced, the vehicle type must therefore be set.

```
        Vehicle type
1 =   911 Carrera 2/4
2 = *911 Carrera(993)
more:                  >
```

```
<     Vehicle type
1 = 968
2 = 944
3 = 928
```

In the vehicle type menu, a selection of vehicle types is displayed. The type currently selected is indicated by an asterisk.

If the unit is to be set to another type, press the appropriate key. The unit will then ask whether the vehicle type is to be changed.