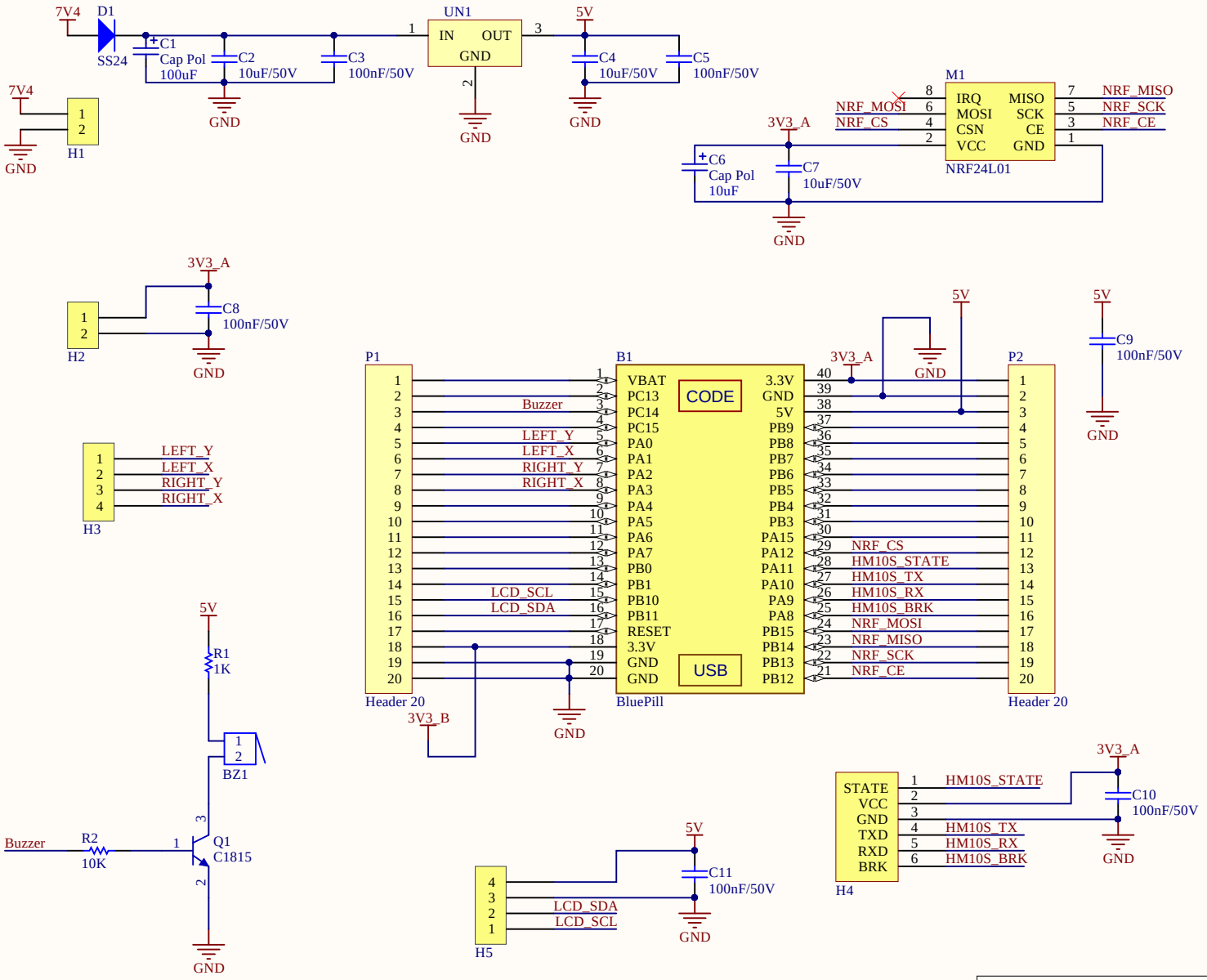

Title **Transmitter**		
Size: A4	Number:^v^	Revision:v1.1
Date: 02/05/2021	Time: 10:04:34 SA	Sheet1 of 1
File: C:\Users\USER\Desktop\drone\hardware\board\Transmitter\Transmitter.SchDoc		

HCM Univercity Technology
268 Li Thuong Kiet Street
District 10
Ho Chi Minh City
Viet Nam

Altium

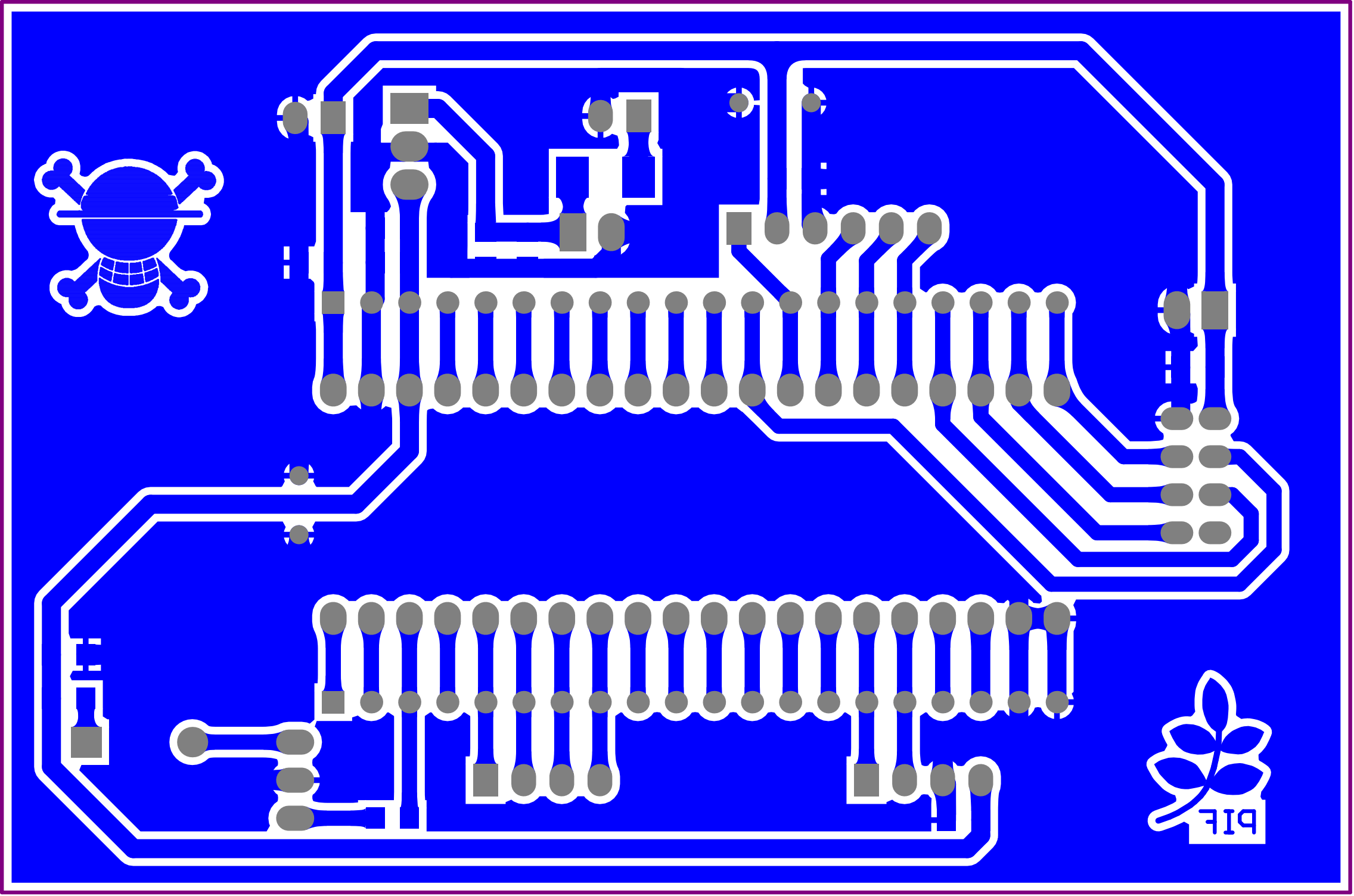
PIF