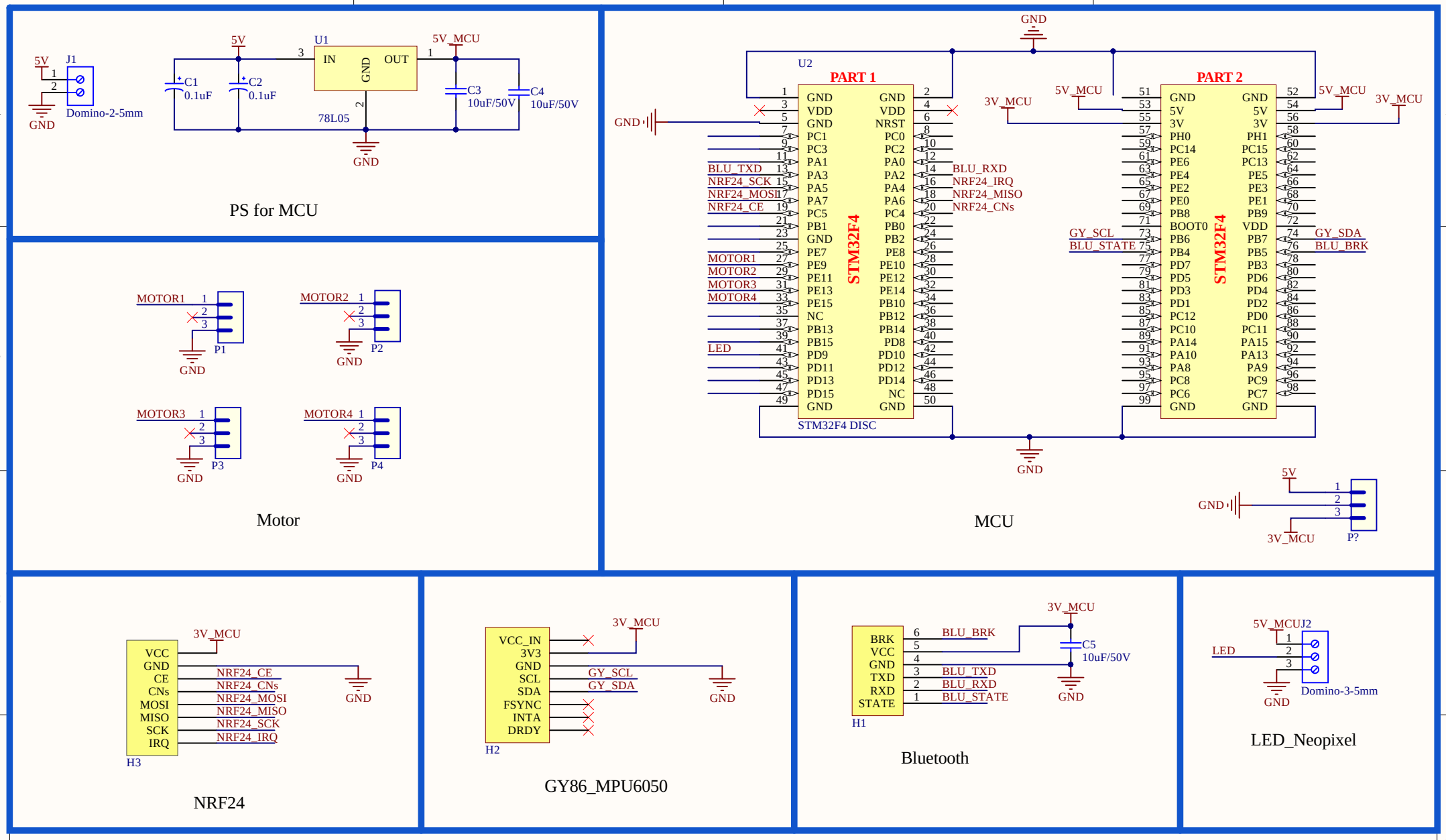

Title **Drone_Main**	Author: *Anh Quoc Nguyen*		*HCM Univercity Technology*
Size: A4	Number: <3	Revision: v1.1	*268 Li Thuong Kiet*
Date: 21/03/2021	Time: 11:20:37 CH	Sheet 1 of 1	*District 10*
File: C:\Users\USER\Desktop\drone\hardware\board\Drone\Drone.SchDoc			*Ho Chi Minh City*
			Viet Nam

Altium