ETH zürich

ALMA MATER STUDIORUM
UNIVERSITÀ DI BOLOGNA

CachePool: Many-core cluster of customizable, lightweight scalar-vector PEs for irregular L2 data-plane workloads

Integrated Systems Laboratory (ETH Zürich)

Zexin Fu, Diyou Shen zexifu, dishen@iis.ee.ethz.ch

Alessandro Vanelli-Coralli avanelli@iis.ee.ethz.ch
Luca Benini lbenini@iis.ee.ethz.ch

PULP Platform
Open Source Hardware, the way it should be!

@pulp_platform
pulp-platform.org
youtube.com/pulp_platform

Hardware Development (Cluster)

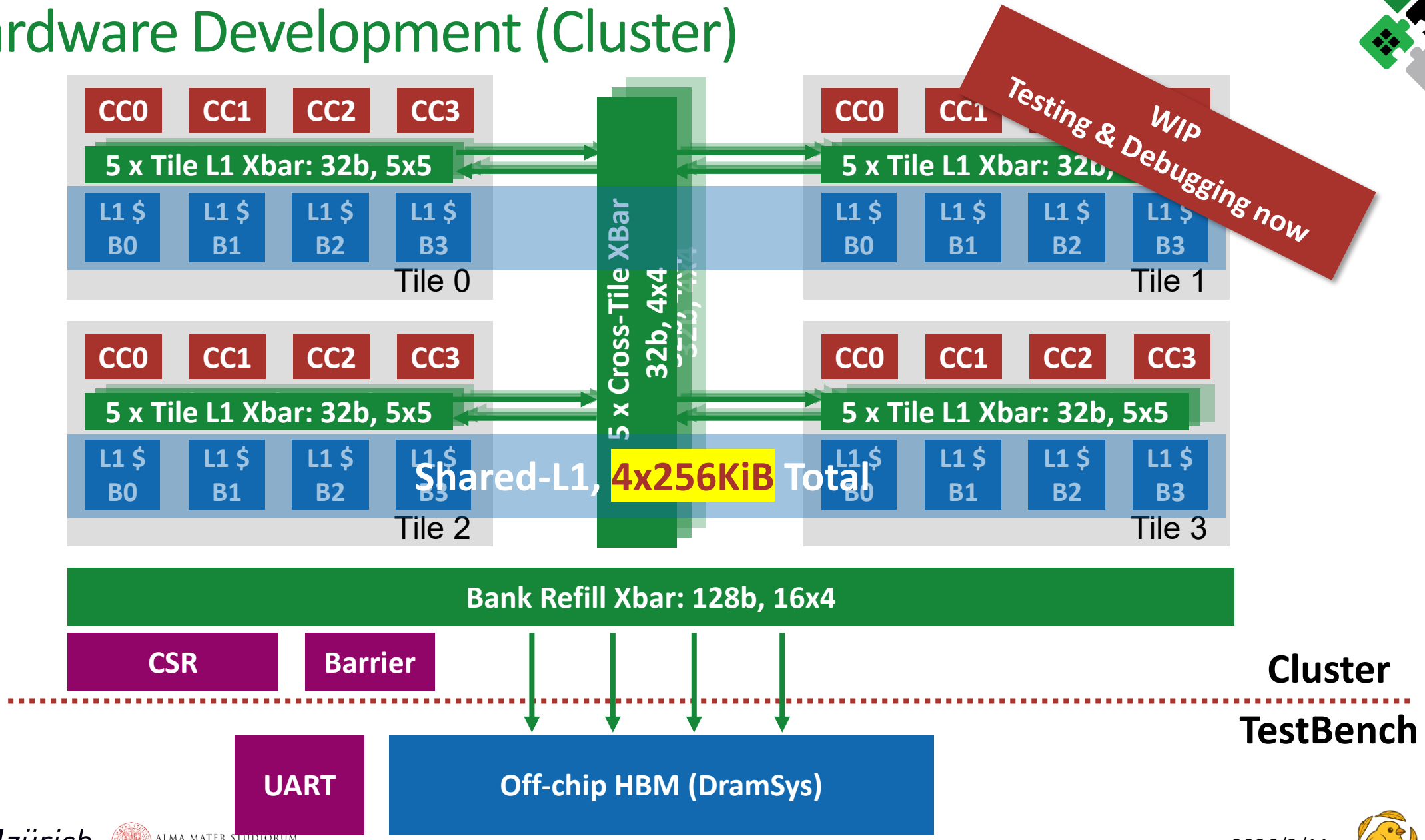

Hardware Development (Cluster)

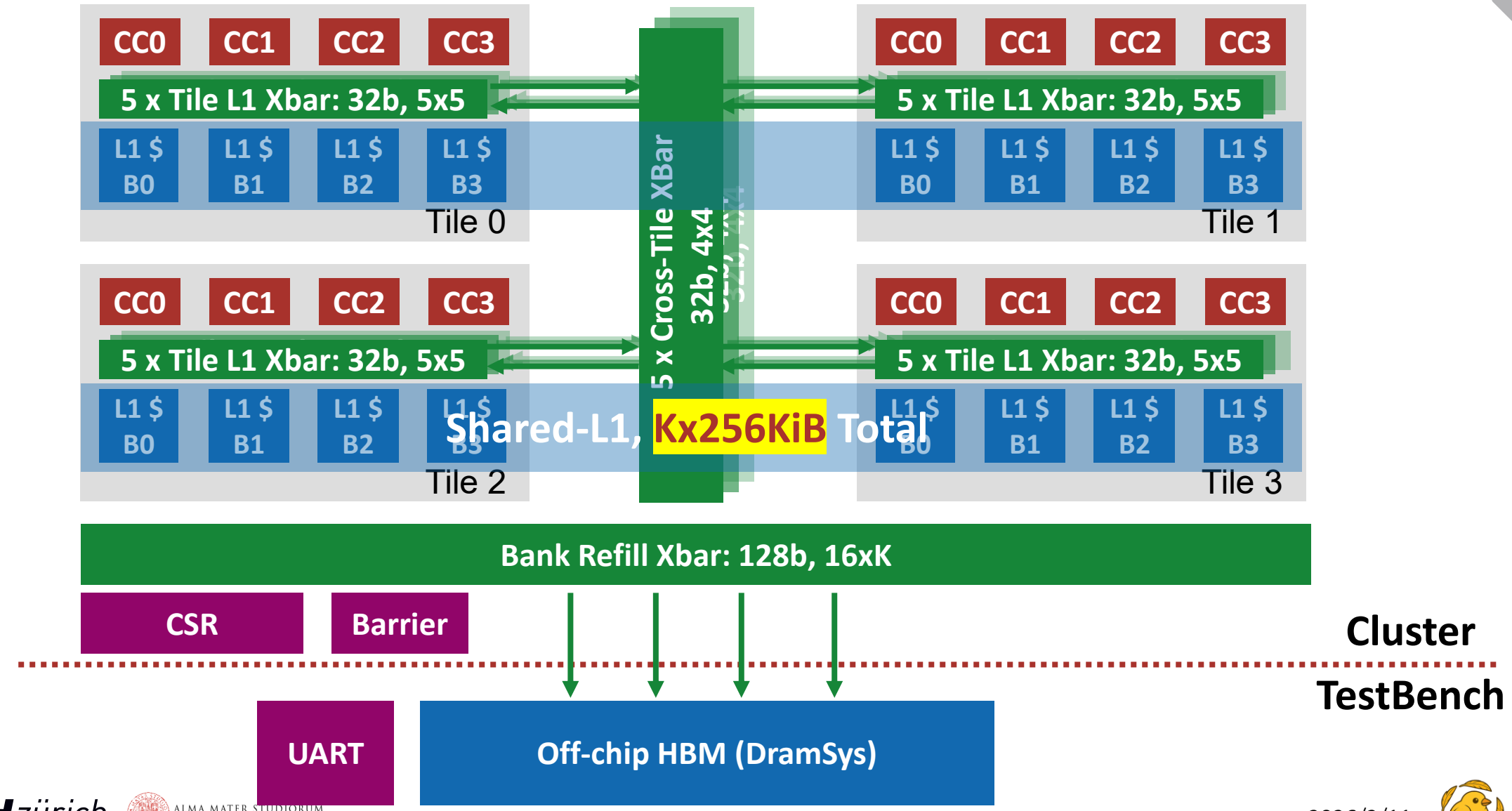

Hardware Development (Cluster)

- **Multi-Tile Configuration**
  - Fully functional X-Tile configurations
    - All kernel passed for 2/4 tile configurations
    - Backend verification undergoing: floorplan adjustments
  - Test 4/8 DRAM channels
  - WIP: Cache Partitioning
    - Implemented and tested two basic configurations
      Fully Private: four independent Tiles
      Fully Shared
    - Switchable during runtime using a memory-mapped register

Performance (Cluster)

- **4 Tile (16 Cores), 4 DDR Channels**
  - TB @1GHz
  - DDR4-1866 => 14.93 GB/s per channel
  - L1-to-DRAM BW: 16 GB/s
  - Performance close to roof

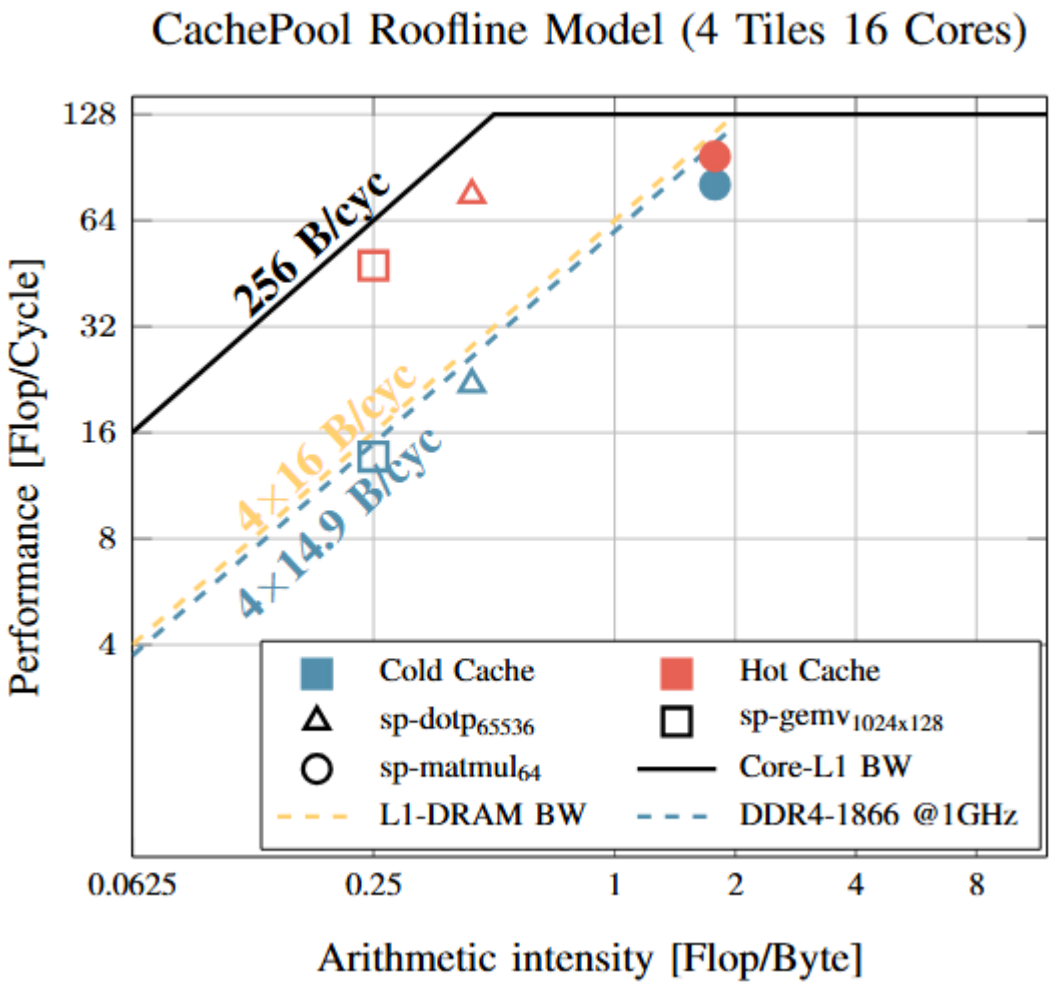

Hardware Development (L1 Cache)

- **Progress**
  - Passed all kernels except RLC (some corner cases)
  - Debugging undergoing
- **Benefits**
  - Significant area efficiency improvement in backend
    Original: One Way: 128x512b SRAM (not generatable) => 4 128x128b SRAMs. Need 512b data, extra address and control wires
    Folded: One Way: 512x128b SRAM. 4 times less SRAM macros. 128b data, no extra wires needed

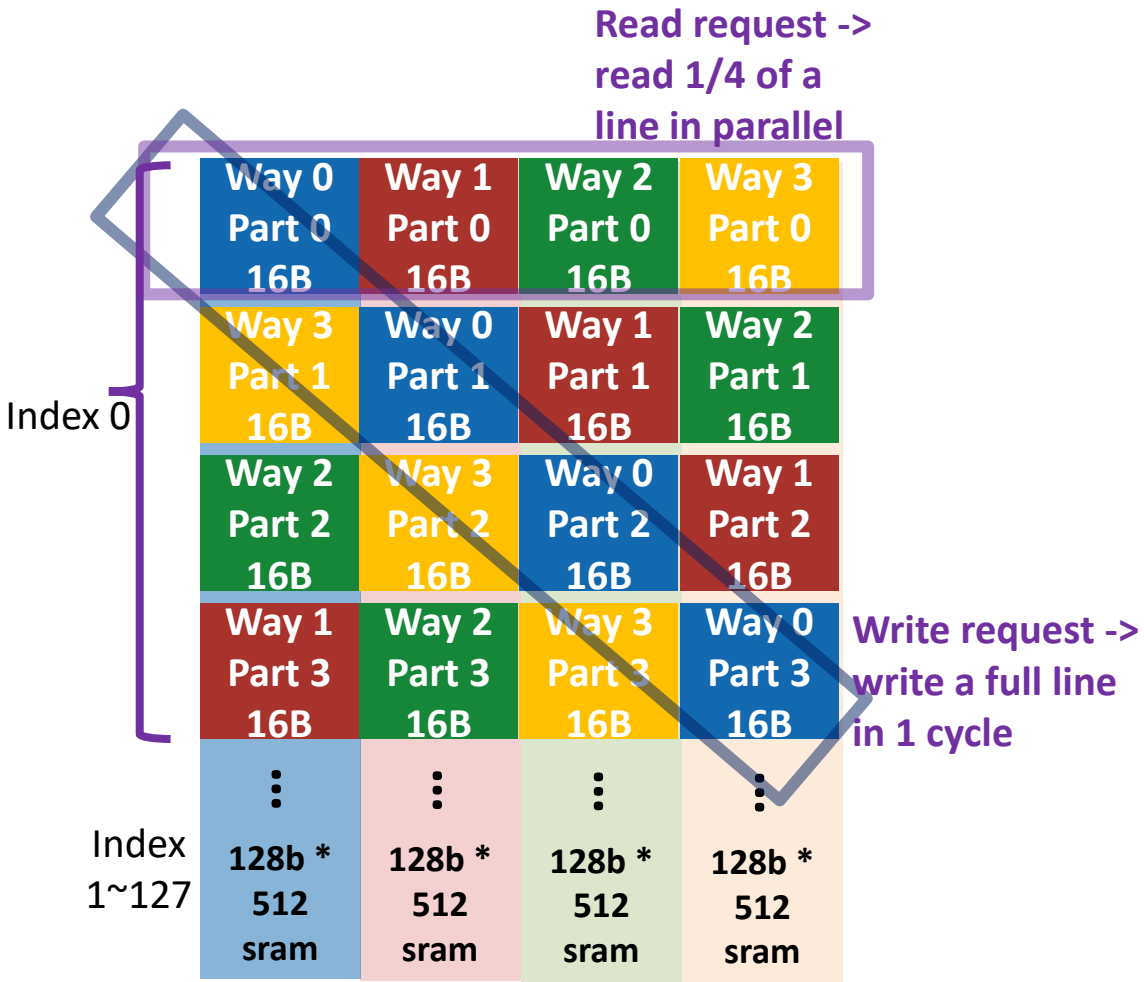

Next Step

- **Holiday Plan for Chinese New Year**
  - Both Zexin and Diyou will be on vacation from 13th Feb to 27th Feb
- **InSitu-Cache Paper**
  - Both Zexin and Diyou will focus on the InSitu cache paper on March. The progress on other side might be delayed
- **Diyou Side**
  - Finish cache partitioning
  - Finish backend exploration
- **Zexin Side**
  - Finish the final debugging on folded cache

Timeline

		2025				2026								
		11	12	1	2	3	4	5	6	7	8	9	10	11
System	Multi-Tile Scaling [RTL]													
	4/16-Group Scaling [GVSoC + RTL]													
L1 Access Latency	Hardware optimization (Cache & Interco) [RTL]													
	Cache partitioning [RTL]													
	WT-L1 by master student [RTL]													
Large NoC latency	Reduce per-hop latency [Physical]													
	Cut clk-domain (optional) [RTL + Physical]													
	NoC Topologies [RTL + GVSoC + Physical]													

Timeline

		2025				2026								
		11	12	1	2	3	4	5	6	7	8	9	10	11
Improve scalar core performance	Shared vector core [RTL + GVSoC]													
SW Kernel	Kernel optimization [SW]													
	Kernel development [SW]													
Report	Final Report and Benchmark													

L1 Access Latency

- **Problem: increased L1 access latency when scaling up**
- **Solutions**
  - **(Ongoing, RTL & Physical) Hardware optimization**
    Further optimize the interconnection and cache controller to reduce access latency on existing architecture
    => Retiming the current interconnection, remove unnecessary cuts in interco and cache
    => Target to reduce 1-2 cycles (~5 cyc) for hit-to-use latency
  - **(Ongoing, RTL) Cache partitioning**
    Partition the shared L1 to keep data localized to avoid remote access latency
  - **(Ongoing, RTL & Physical) WT-L1**
    Explore and evaluate a private WT L1 for each core
    => Ongoing master thesis, now is working on the coherence between L1 caches
    => Currently plan to use hierarchical directory-based approach

L1 Access Latency

- **Problem: large NoC latency (~28 cyc based on previous exploration)**
- **Solutions**
  - **(Ongoing, Physical) Reduce hop latency**
    Explore the timing under 7nm technology to see the possibility of reducing per-hop latency to 1 cycle
    => Reduce the latency by 1/2
  - **(Planned, Physical) Cut clk-domain (optional)**
    If 1-cyc is not possible, explore to operate the NoC under a higher frequency than cores (e.g. 1.5GHz)
    => Effectively cut the latency by 1/3
  - **(Planned, GVSoC & Physical) NoC Topology**
    Explore different NoC topologies
    => Torus to reduce the diameter of NoC by 1/2, reduce longest latency by 1/2

PE-Related

- **Problem: Improve scalar core performance**
- **Solutions**
  - **(Planned, RTL & GVSoC) Shared vector core**
    Explore two Snitch sharing one Spatz configuration to improve scalar performance
    Software complexity needs to be considered, especially on the possible conflicting use of register file.

RLC Workload

- **Problem: Current RLC model cannot reveal all properties of the kernel**
- **Solutions**
  - **(Ongoing, SW) Kernel optimization**
    Adapt the current model to better represent the real cases, e.g. do some operations on the data. Further cooperation with HQ side to develop a more complete and better model.
  - **(Planned, SW) Kernel development**
    Implement the missing use cases for multi-user

Thank you!