MAX PLANCK INSTITUTE
FOR BIOLOGICAL CYBERNETICS

PARALLEL TRANSMIT (PTX) WITH PULSEQ ON SIEMENS

Dario Bosch[1,2,3]

1 High-Field MR Center, Max Planck Institute for Biological Cybernetics, Tübingen, Germany

2 Core Facility MRT, Medical Faculty, University of Tübingen, Germany

3 Department for Biomedical Magnetic Resonance, University of Tübingen, Tübingen, Germany

What is parallel transmission?

“CP mode”
→ circularly polarized
Usually hard wired

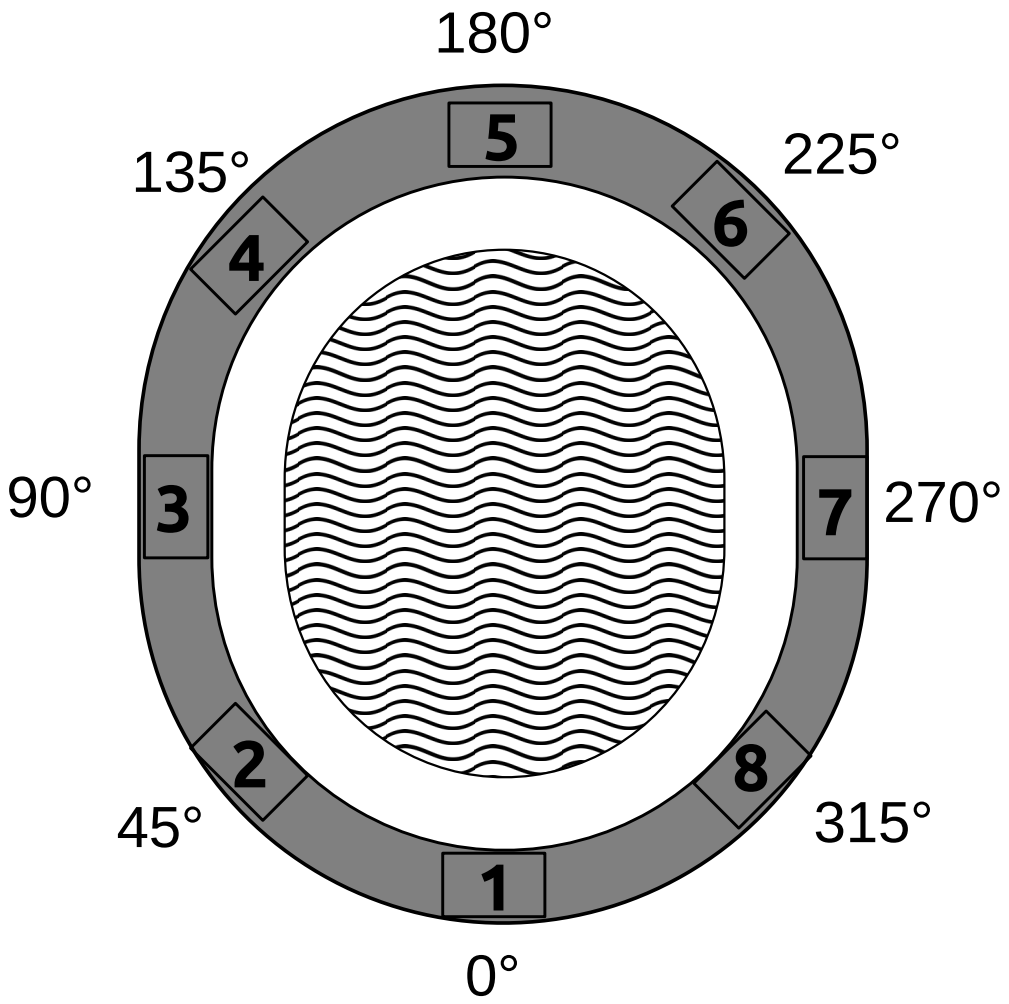

“CP mode”
→ circularly polarized
Usually hard wired

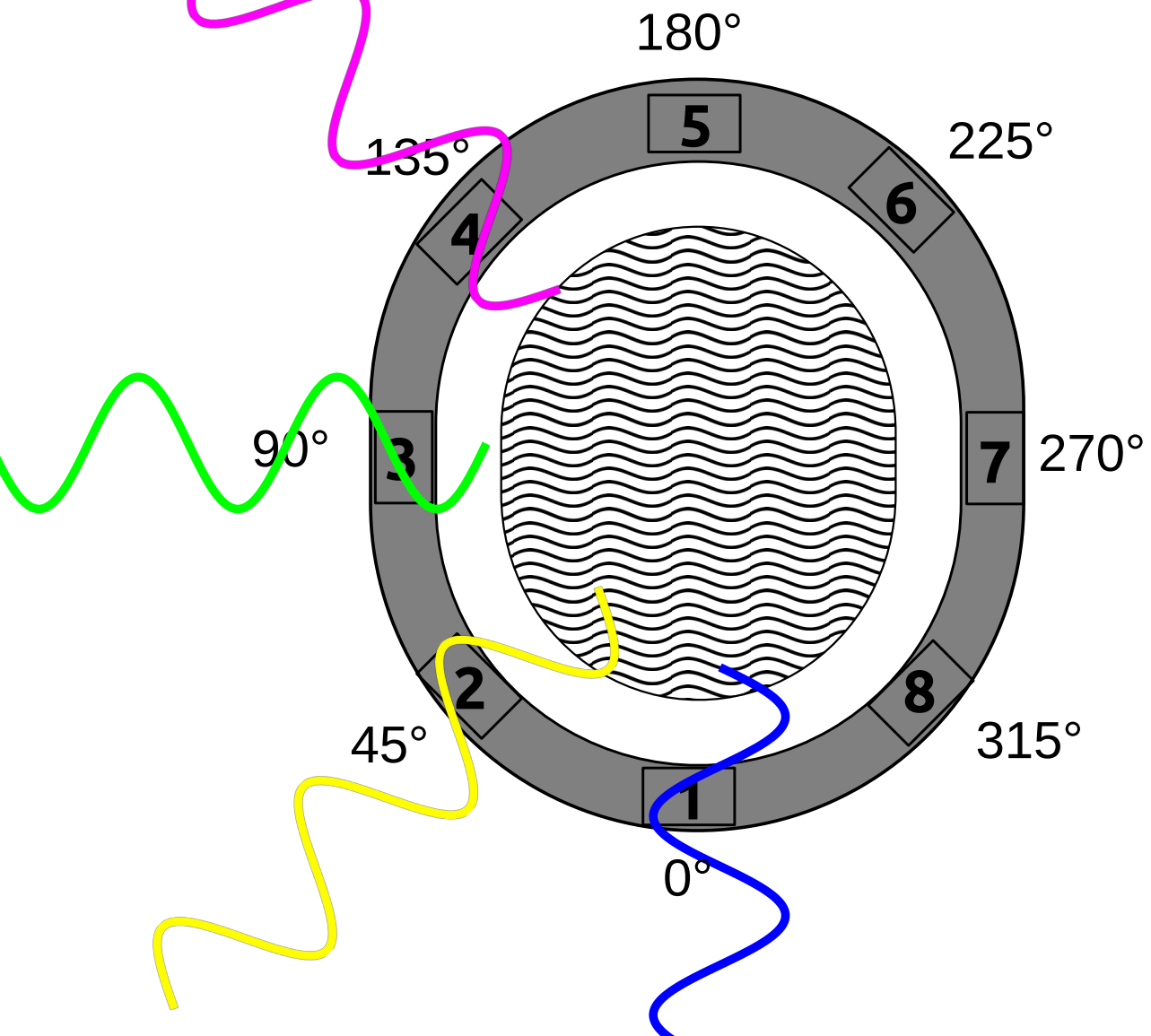

“CP mode”
→ circularly polarized
Usually hard wired

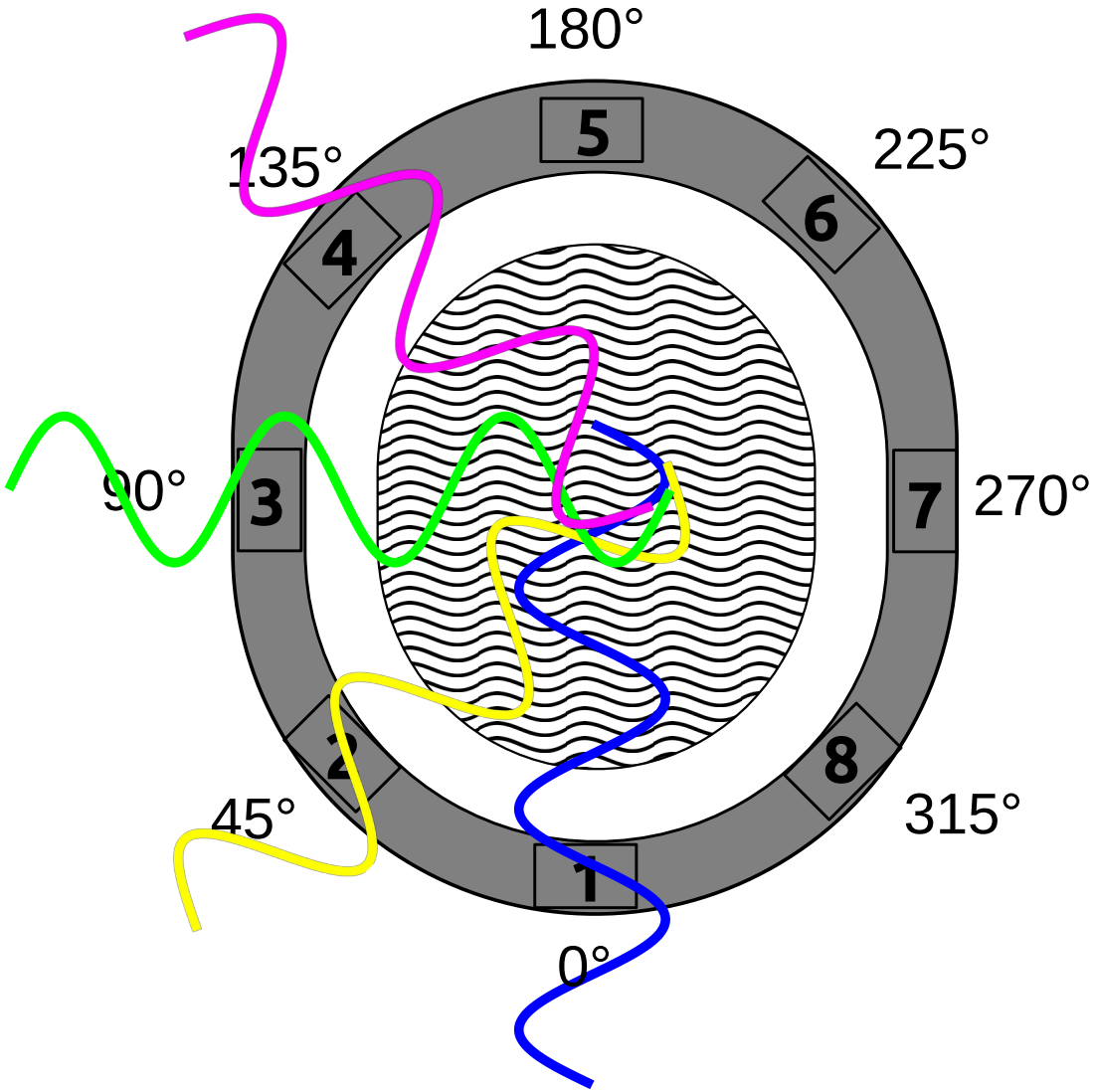

- Phase offset between coil elements affects interference pattern

Parallel transmit in vendor native sequences is cumbersome

- Even when starting from existing sequence
  - Replace the RF pulse
  - Load correct waveforms
  - Load gradient waveforms
  -

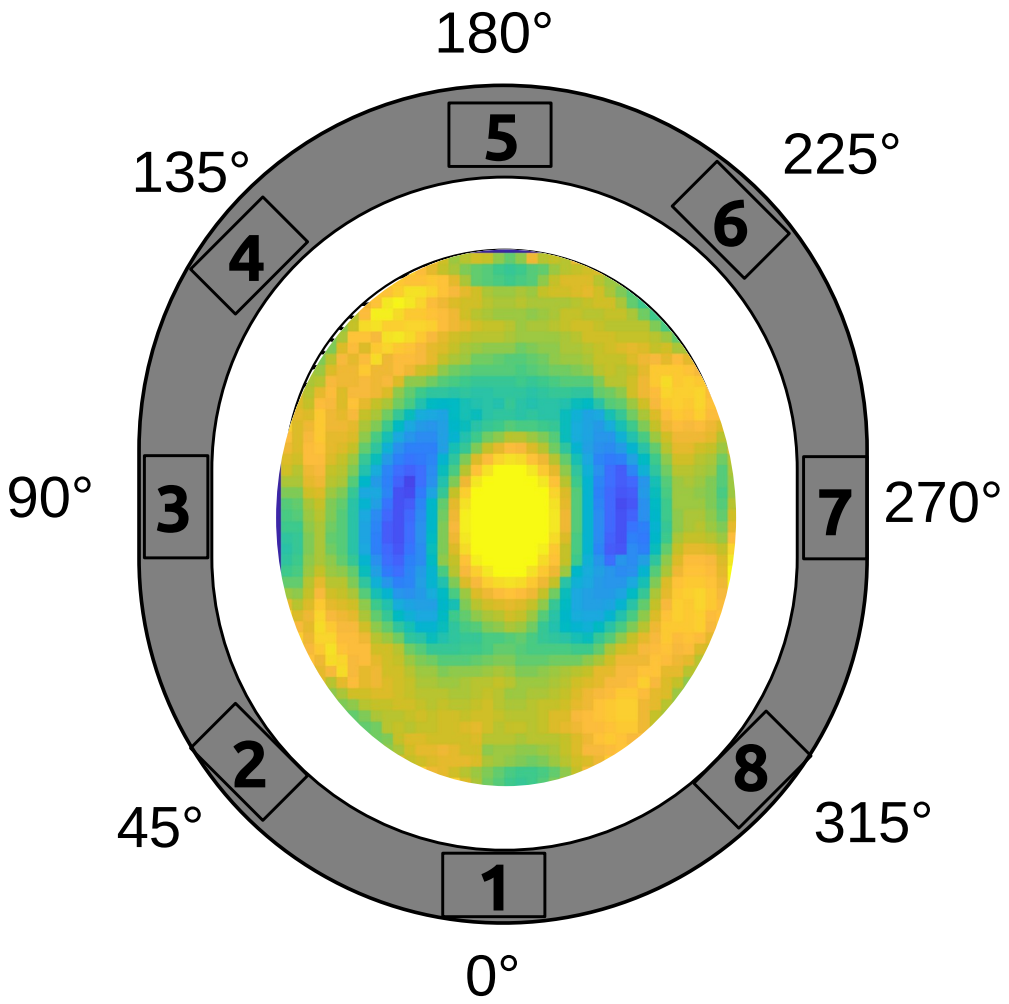

- Phase offset between coil elements affects interference
- Interference pattern causes B1 inhomogeneities

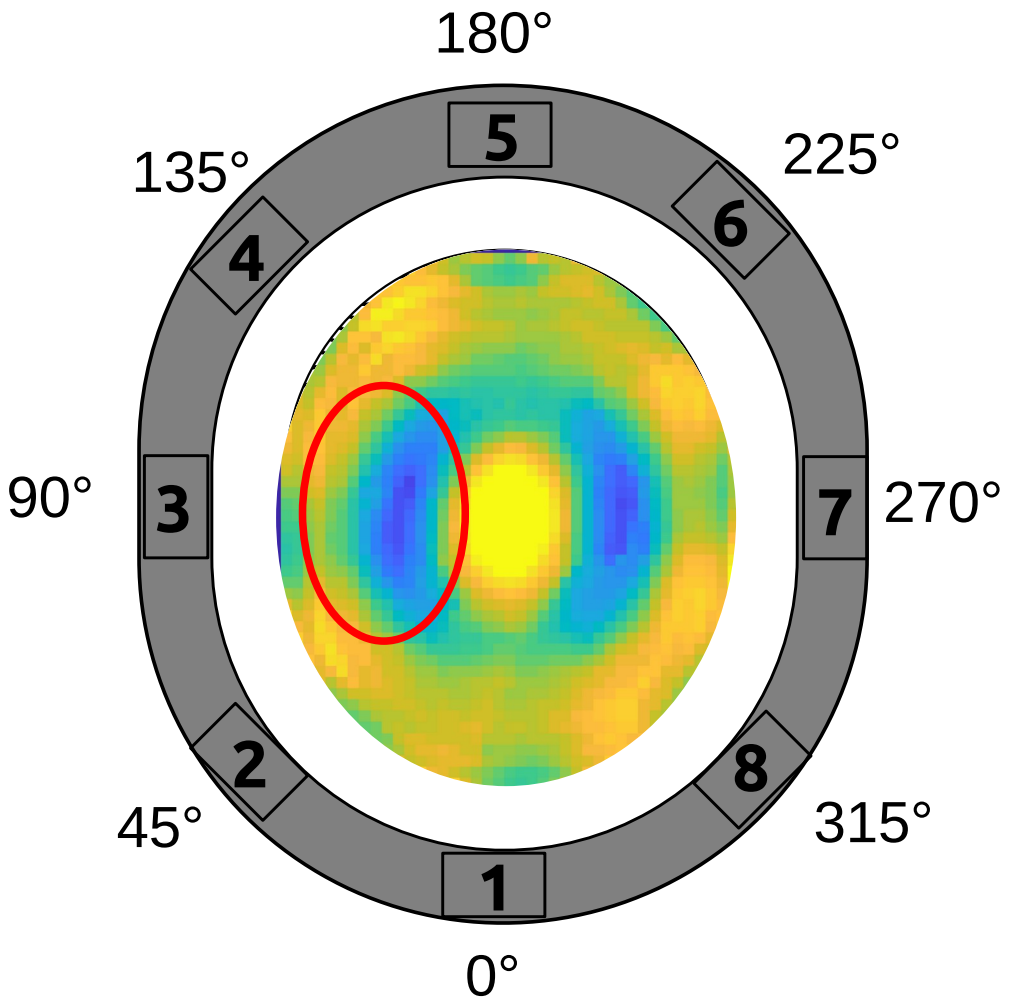

- Phase offset between coil elements affects interference
- Interference pattern causes B1 inhomogeneities

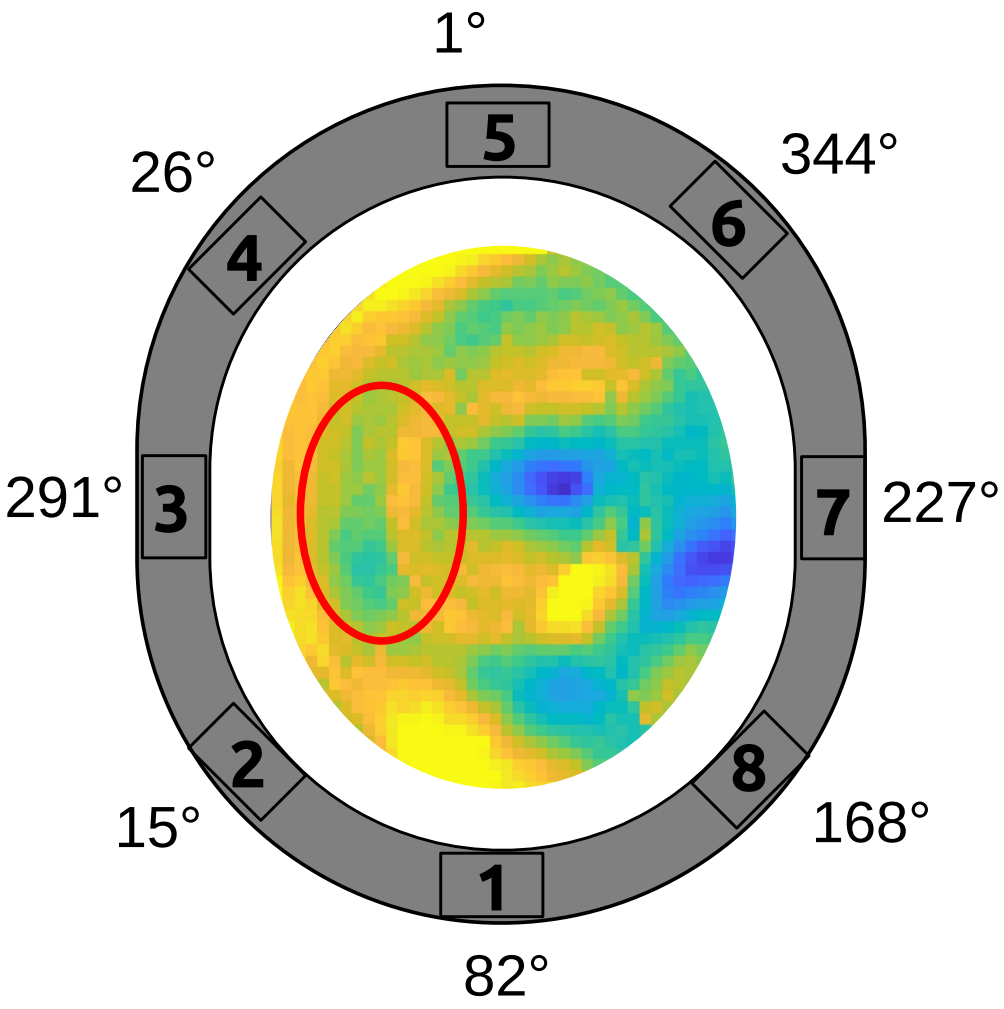

- Phase offset between coil elements affects interference
- Interference pattern causes B1 inhomogeneities
- By modulating the phases we can shape the B1 pattern
  - “Phase shimming”
  - “Amplitude shimming”

Meeting abstract | Issued: 2023 | DOI: 10.1007/s10334-023-01108-9

A simple pTx Pulseq extension for pulse-specific B1 shimming

Freudensprung, M Weinmüller, S Endres, J Nagel, AM Zaiss, M

❝ Freudensprung, M., Weinmüller, S., Endres, J., Nagel, A., & Zaiss, M. (2023). A simple pTx Pulseq extension for pulse-specific B1 shimming. *Magnetic Resonance Materials in Physics, Biology and Medicine*, *36*(Supplement 1): LT53, S68-S69.

Since v1.5.1 part of Siemens pulseq interpreter

```
if r==1
    seq.addBlock(rf,gz);
else
    seq.addBlock(rf,gz,mr.makeRfShim([1, exp(1i*2*pi/(Nrep)*(r-1))]));
end
```

Single Channel System

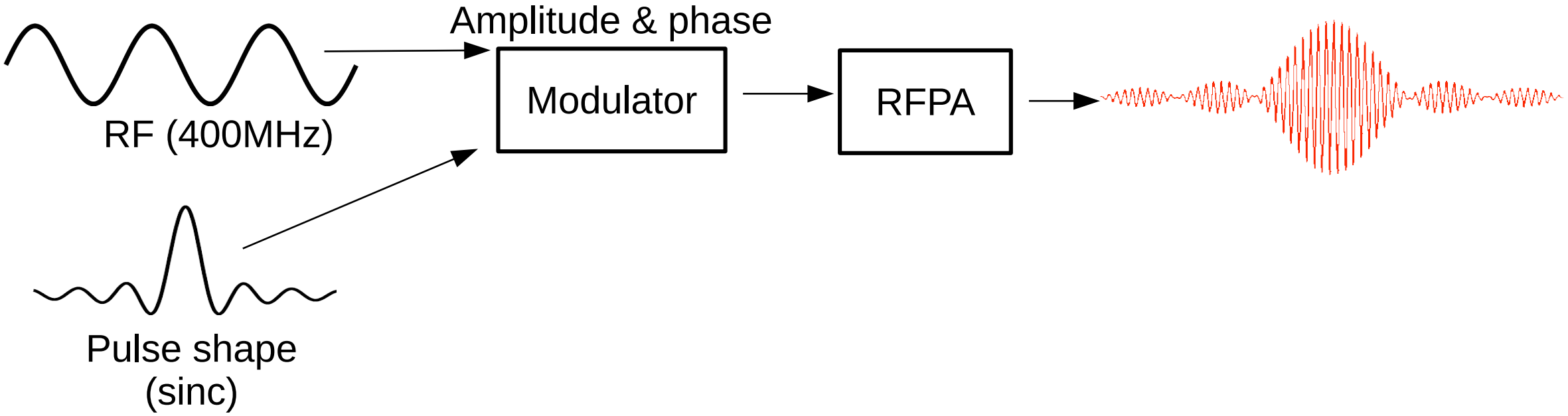

A more sophisticated pTx system

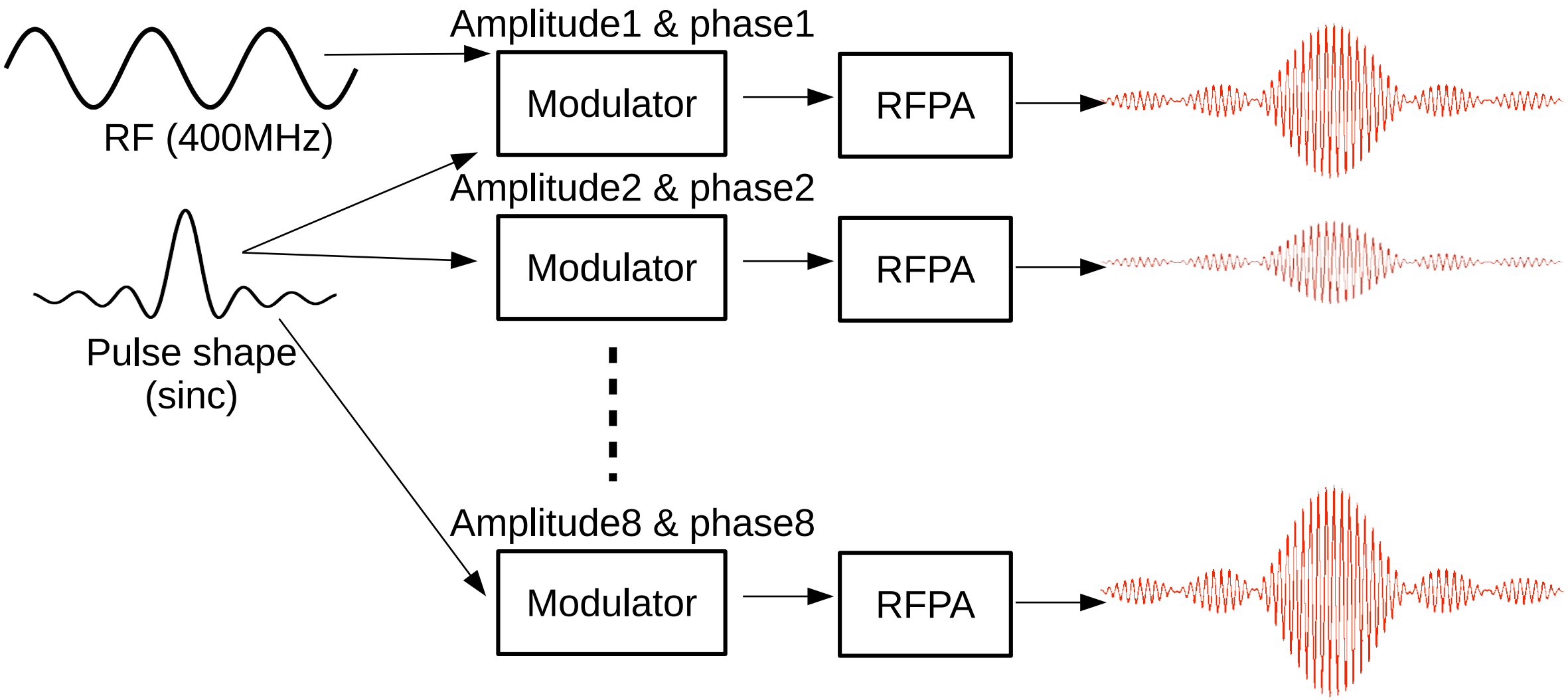

Arbitrary Pulse Shapes

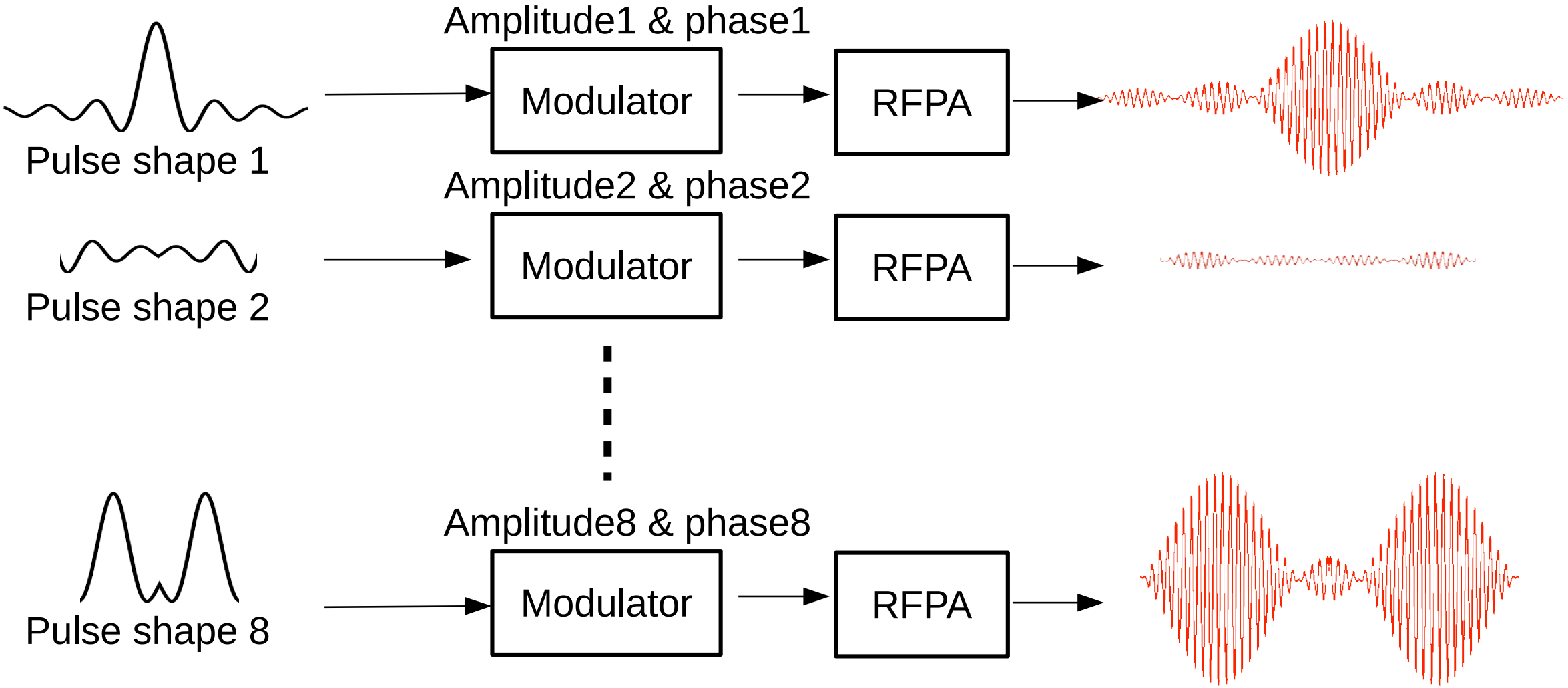

pTx Pulse Design

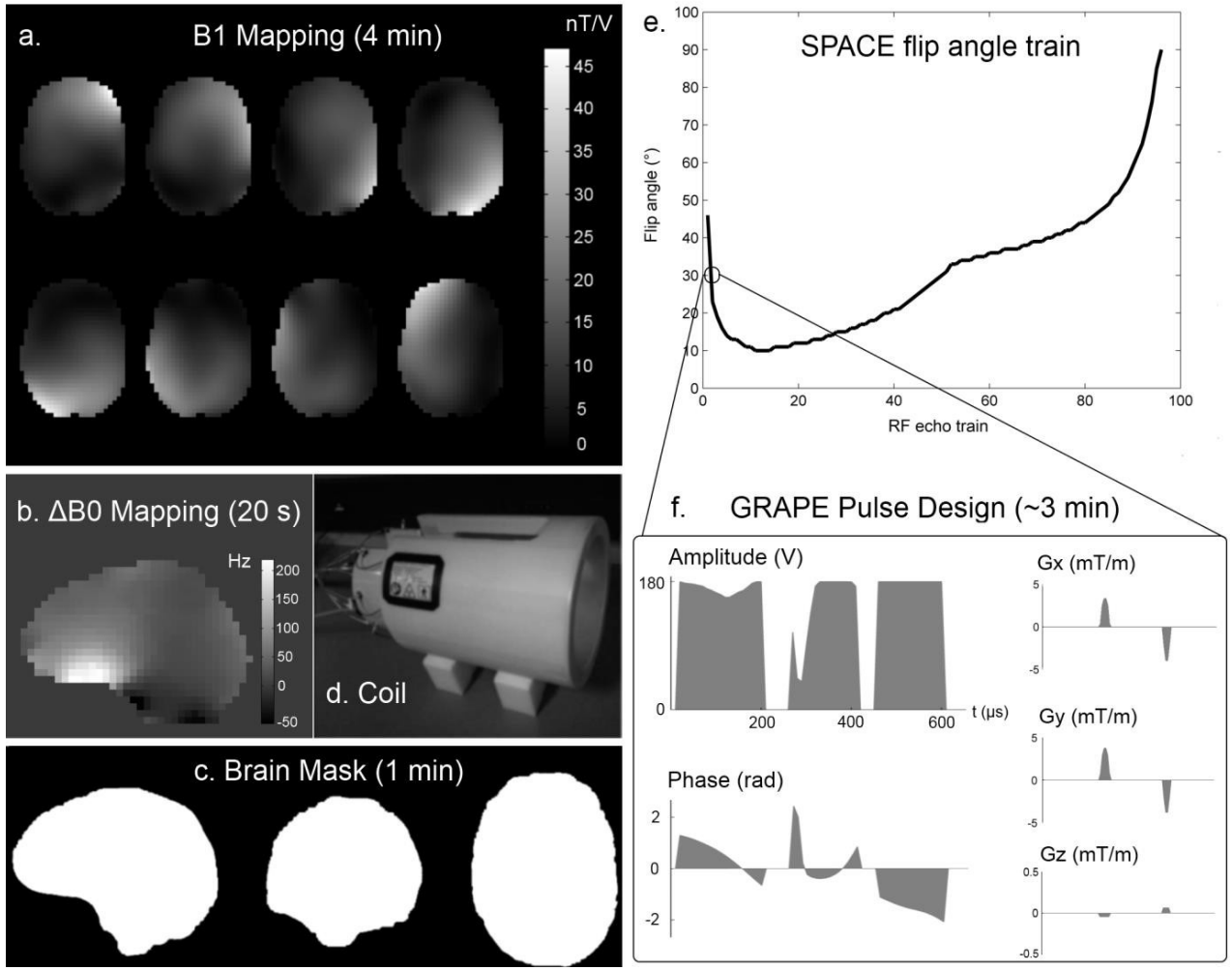

[Massire, 2014]

Using pTx-Spokes at 7T (GRE)

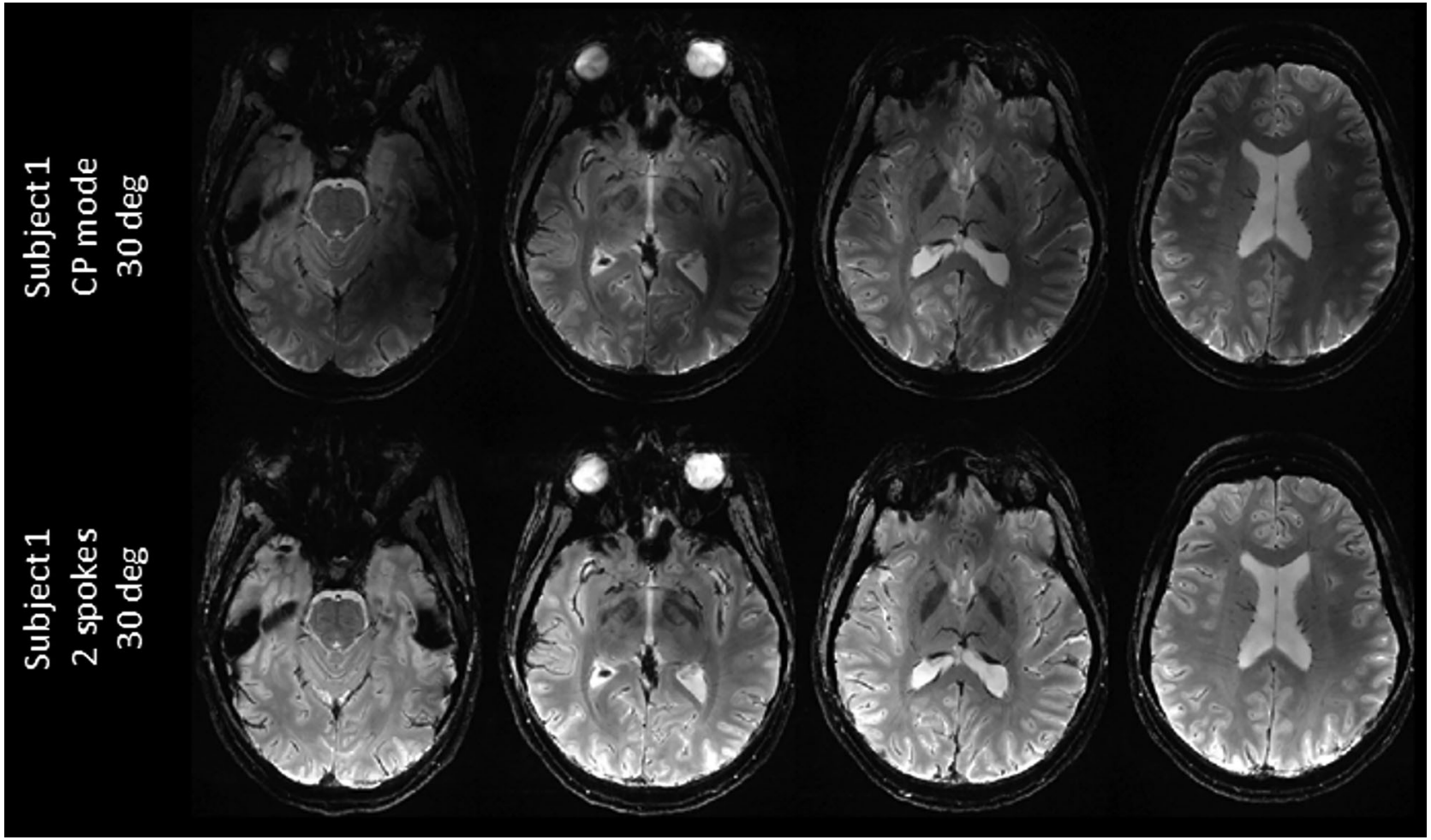

[Gras et al, 2017]

Reduced FOV imaging

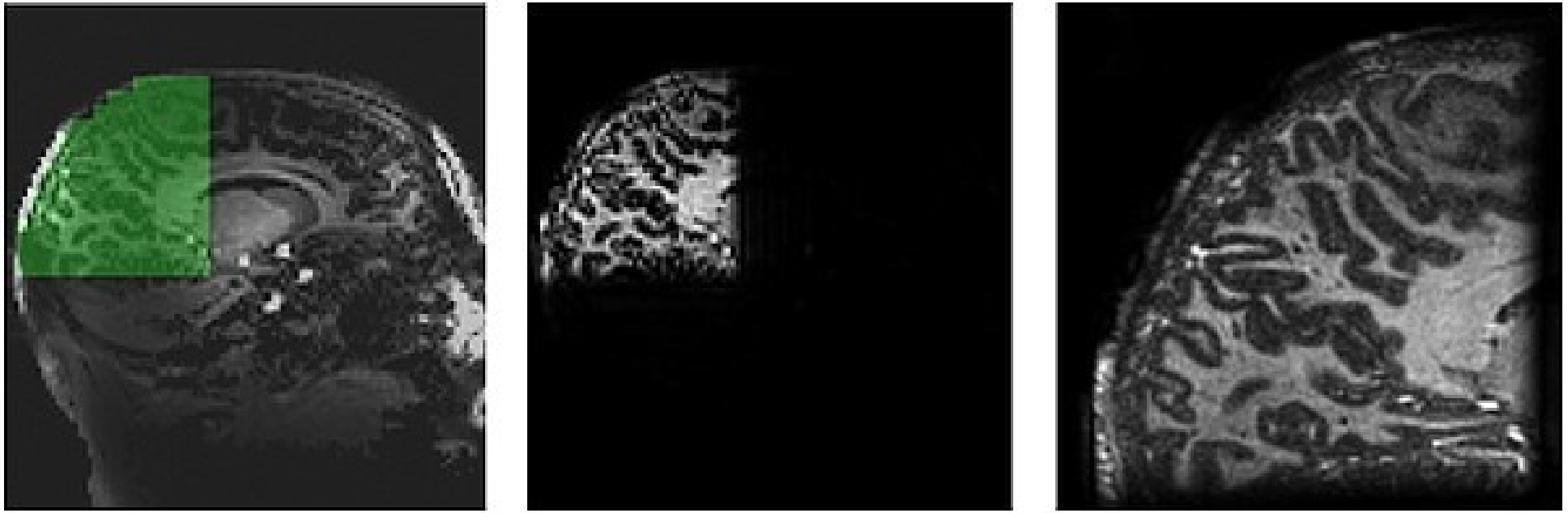

[PTB Berlin]

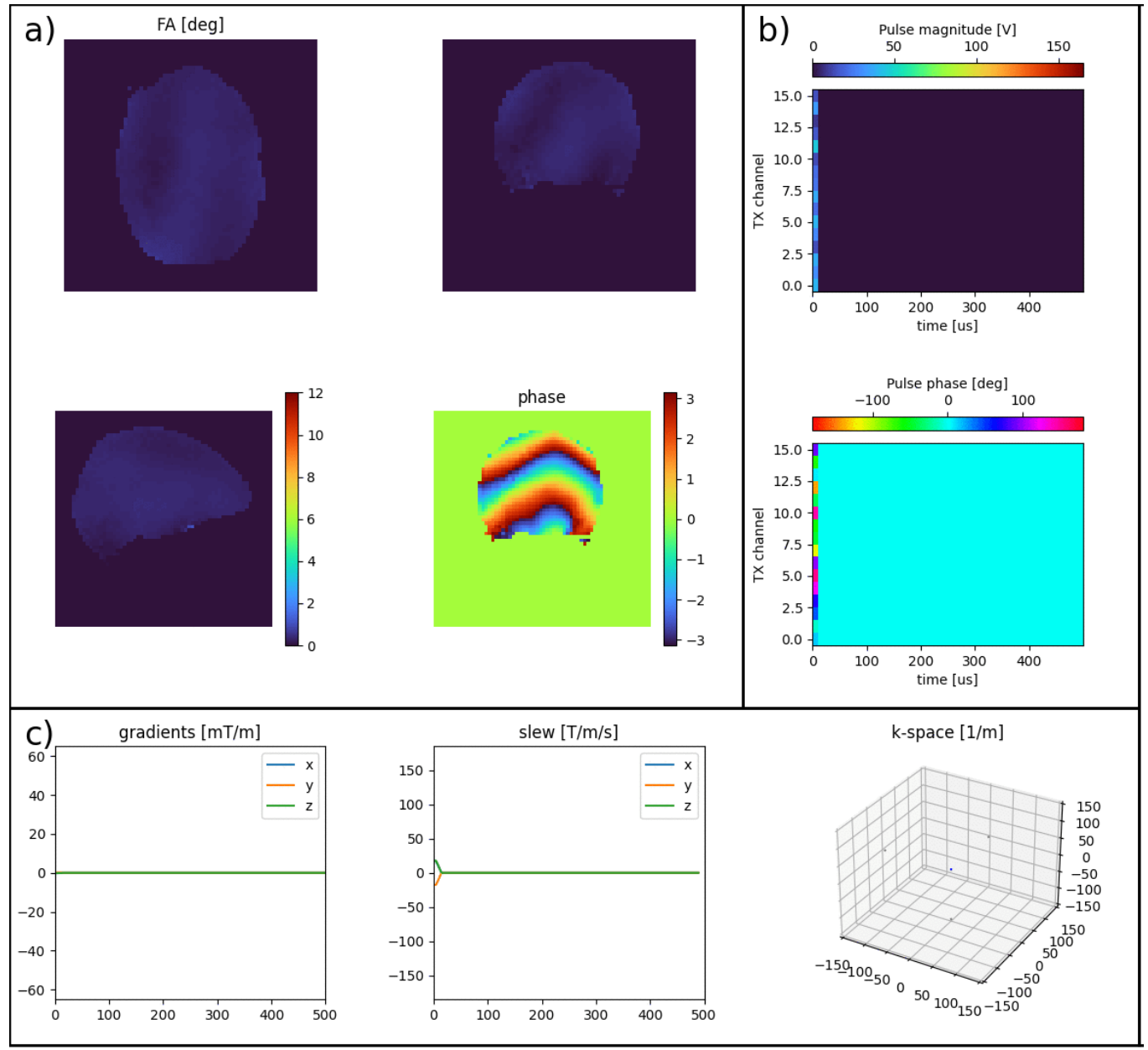
a)
FA [deg]
phase
b)
Pulse magnitude [V]
TX channel
time [us]
Pulse phase [deg]
TX channel
time [us]
c)
gradients [mT/m]
x
y
z
slew [T/m/s]
x
y
z
k-space [1/m]

Adding pTx capability to vendor native sequences is cumbersome

- Replace RF pulse
- Select correct pulse shape (per channel)
- Treat gradient waveforms correctly
  - FOV rotation on Siemens rotates **all** gradients
  - Gradient orientation of pTx pulse independent of FOV orientation
  - Want to manipulate magnetization phase during excitation

3251

Pulseq on Philips MRI Systems: *Unlocking and Validating Open-Source Sequences*

Thomas Roos[1], Edwin Versteeg[1], Mark Gosselink[1], Hans Hoogduin[1], Dennis Klomp[1], Jeroen Siero[1], and Jannie Wijnen[1]
[1]*Department of Radiology, High Field MRI group, University Medical Center Utrecht, Utrecht, Netherlands*

Synopsis

Keywords: Pulse Sequence Design, Pulse Sequence Design, Pulseq, reproducable, open, open-source, UHF, 7T, Philips

Motivation: Conventional MRI vendor-specific sequence development limits research transferability and reproducibility. Harmonized frameworks, like Pulseq, overcome these limitations - but Pulseq was not supported yet on Philips MRI scanners.

Goal(s): To develop a fully-compliant Pulseq interpreter for Philips MRI systems, facilitating the use of open-source sequences previously incompatible with these platforms.

Approach: Custom adaptation of Pulseq for the Philips R5.4 platform, followed by validation with standard imaging sequences using a field camera and phantom/in vivo scans, and comparison with native sequences.

Results: Demonstration of the first Philips-compatible Pulseq interpreter, evidenced by successful scans at 7T, marking a leap in cross-vendor research capabilities.

Impact: The successful adaptation of Pulseq sequences to Philips MRI system enables researchers to deploy and disseminate advanced MRI techniques universally, fostering cross-vendor collaboration and accelerating the evolution of MRI technology.

Siemens pTx-Extension for Pulse

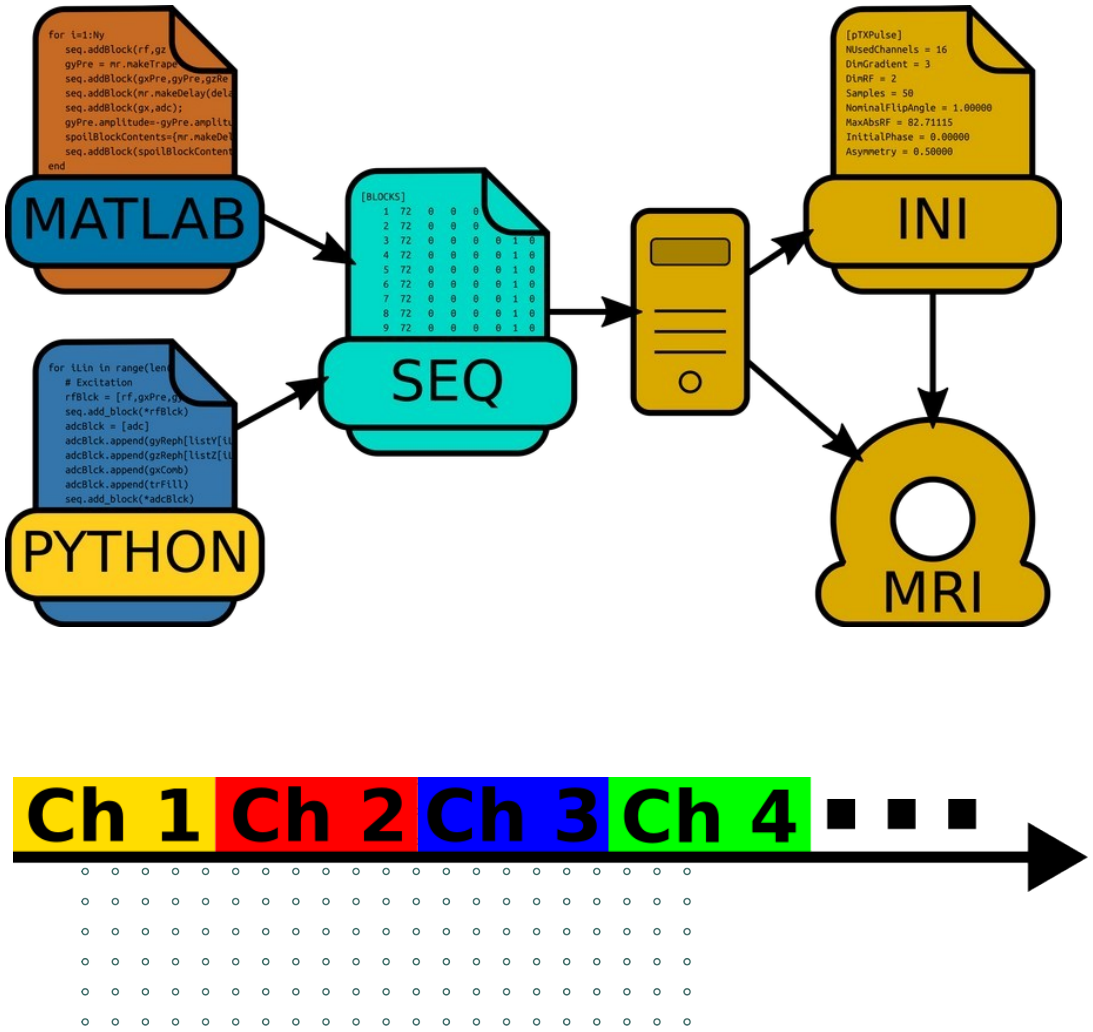

Liberating pTx from Vendor Lock-in:Open-Source Cross-Vendor Parallel Transmit MRI Sequences by extending pTx-Pulseq to Siemens UHF Scanners

Dario Bosch[1,2,3], Thomas Roos[4], and Klaus Scheffler[1,2]

1 High-Field MR Center, Max Planck Institute for Biological Cybernetics, Tübingen, Germany 2 Department for Biomedical Magnetic Resonance, University of Tübingen, Tübingen, Germany 3 Core Facility for Magnetic Resonance Imaging, Medical Faculty, University of Tübingen, Germany 4 Department of Radiology, High Field MRI group, University Medical Center Utrecht, Utrecht, Netherlands

Introduction

MRI Pulse Sequence source code is **vendor-specific** and **sensitive to software updates** within one generation of MRI scanners. Pulseq[1] is an approach for **vendor-agnostic open-source sequence programming**.
Parallel Transmit (**pTx**) RF-Pulses are an important technique in ultra-high field MRI and were **not supported** by Pulseq in the past, so **no open-source pTx sequences** have been available so far. Roos et al. presented an **online full pTx extension for Pulseq** that runs on Philips scanners [2]. We adapted the

Methods

Implementation

The **Pulseq v1.4.3** interpreter **for Siemens MRI** scanners was modified to handle **pTx pulses**. The waveforms of all channels are concatenated and **stored as one long waveform** (Roos et al.[2]). Modern Siemens MRI systems require the **pTx pulses in .ini** files. The interpreter **converts pulses to .ini files** upon loading the sequence (Fig. 2). It supports an **arbitrary number of pTx pulses** for each sequence. pTx pulses that can be described by an RF shim are converted to that format. Helper functions for **embedding pTx pulses**

tlab and Python (Fig. 1). The
versions **VE12U**, **XA60/70** and

d 9.4 T scanners running soft-
nel transmit images acquired
compared to an equivalent
d Turboflash [3] sequence **for**
ed in Pulseq. B_1^+ and B_0 maps
was used to calculate a **free**
tion, which was then used in a

2017):1544-1552 ;
024, #1149;
022):322-330 ;
MAGMA (2024):127-138

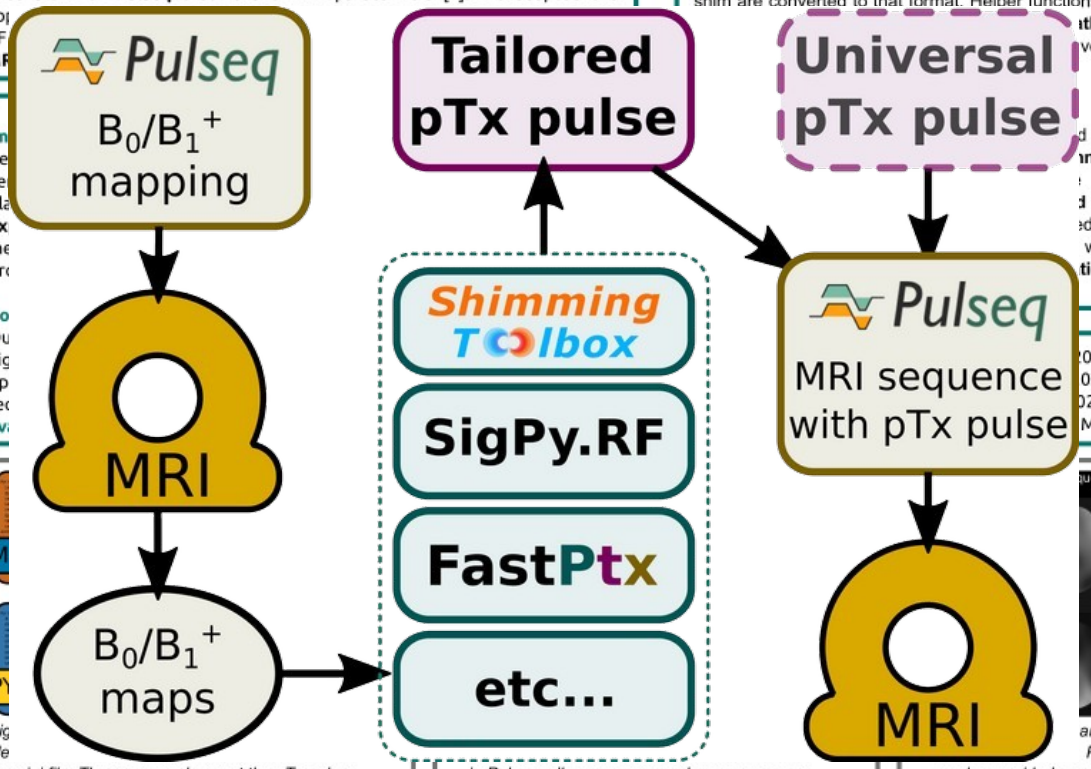

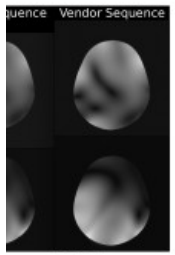

Fig
file
to a .ini file. The scanner plays out the pTx pulse.

in Pulseq, all sequences can be open-source.

annel GRE images in a phantom,
Pulseq interpreter (left) and a
vendor-provided sequence (right)

Funding by ERCAdvanced Grant "SpreadMRI" No. 834940 is greadfully acknowledged.

ISMRM Ultra-High Field MR & Brain Function Workshop, Annapolis, 31.03-02.04.2025

Ptx-pulseq example script

```
% if no ini file is set, a rect pulse will be used
inifile = './8Tx.ini';

if isempty(inifile)
    [rf, rfDelay] = mr.makeBlockPulse(deg2rad(alpha),sys,'Duration',0.2e-3);
else
    [rf,rfDelay,pTx_gx,pTx_gy,pTx_gz] = createPtxPulse(sys,inifile,deg2rad(alpha),'excitation');
    seq.registerGradEvent(pTx_gx);
    seq.registerGradEvent(pTx_gy);
    seq.registerGradEvent(pTx_gz);
end
```

Ptx-pulseq example script

```
% if no ini file is set, a rect pulse will be used
inifile = './8Tx.ini';

if isempty(inifile)
    [rf, rfDelay] = mr.makeBlockPulse(deg2rad(alpha),sys,'Duration',0.2e-3);
else
    [rf,rfDelay,pTx_gx,pTx_gy,pTx_gz] = createPtxPulse(sys,inifile,deg2rad(alpha),'excitation');
    seq.registerGradEvent(pTx_gx);
    seq.registerGradEvent(pTx_gy);
    seq.registerGradEvent(pTx_gz);
end
```

Going forward

- Implement in pulseq v1.5.1/v1.5.2
  - New pulseq-native RF-shimming needs to be taken into account
- More example scripts
- Publish whole pTx pipeline
  - acquire and reconstruct B1+ maps
  - Optimize pulse shape
  - Run sequence with pTx pulse
- Issues with FOV-rotation & shift when using NOROT-flag
  - Not pTx exclusive