Self-Driving Car: Telecommunication Team

ECE 4773: CAPSTONE

CRITICAL DESIGN REVIEW

BY: LILI NGUYEN, OUSMANE SEGBA KONE, PUNDIT VORAKITOLAN, VAN LANG

The Problem/Requirements

- Current State:
  - The 2025 Nissan Leaf is controllable via PS5 gamepad, but limited by Bluetooth range (<30 ft)
- The Challenge:
  - Maintaining low-latency ($\leq 100ms$) over long distance networks
- Should ensure vehicle safety if the connection drops

Design Objective

- Read Logitech G29 input
- Normalize steering and pedal data
- Send commands over the communication link
- Process commands on the ESP32Output vehicle control signals
- Include safety and failsafe logic

Top Level Block Diagram

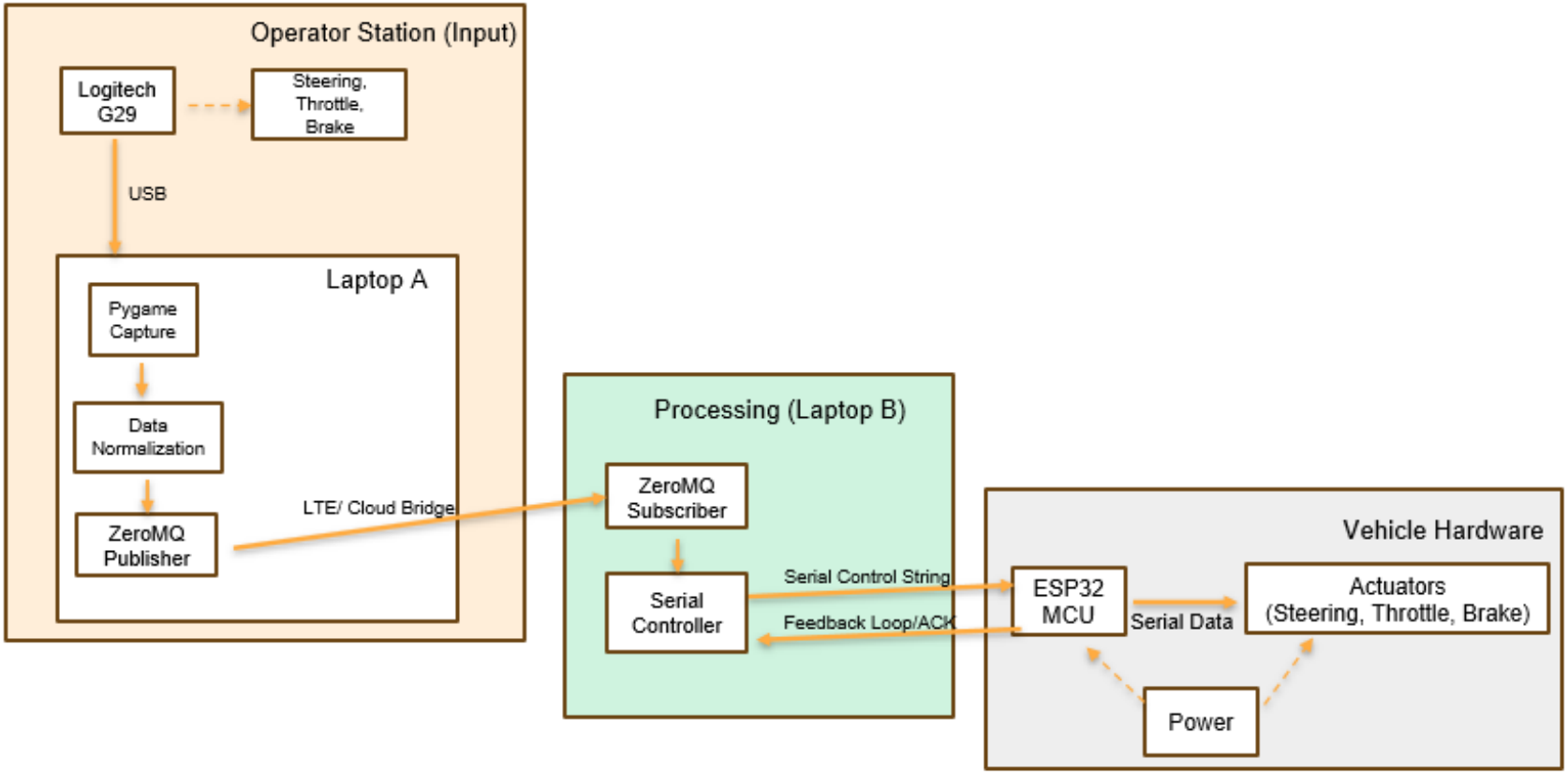

Schedule/Milestones

Phase	Key Tasks	Status	Milestone / Deliverable
1. Research	Bench-test G29, Pivot to ZeroMQ	Complete	Preliminary Design
2. Development	Two-Laptop Relay Setup	Complete	Functional Communication Link
3. Integration	Bridging LTE/Cloud to the Nissan Leaf	End of March	Long-Range Connectivity Test
4. Validation	Connection Loss Drills	Early April	Safety Validation
5. Operations	Performance Audit & Final Demo	End of April	Successful Parking Lot Demo

Hardware / Software Components

HARDWARE

- Logitech G29
- Sender Laptop
- Receiver Laptop
- ESP32
- Network Link

SOFTWARE

- Python
- Pygame
- ZeroMQ
- JSON
- Time module

ROLES

- Sender → Read inputs, send events
- Receiver → Receive events, compute latency

Communication / Control Flow

Input Capture

Network Transmission

Hardware Communication

Acknowledgment Loop

Control Message Format

- Format
  - G29 + JSON
- Sender Laptop
  - Detect event
  - Create JSON (seq, send_ts, values)
  - ZeroMQ PUB send
- Receiver
  - ZeroMQ SUB receive
  - Computed latency
  - Serial To ESP32
- ESP32
  - Receive serial data
  - Send ACK

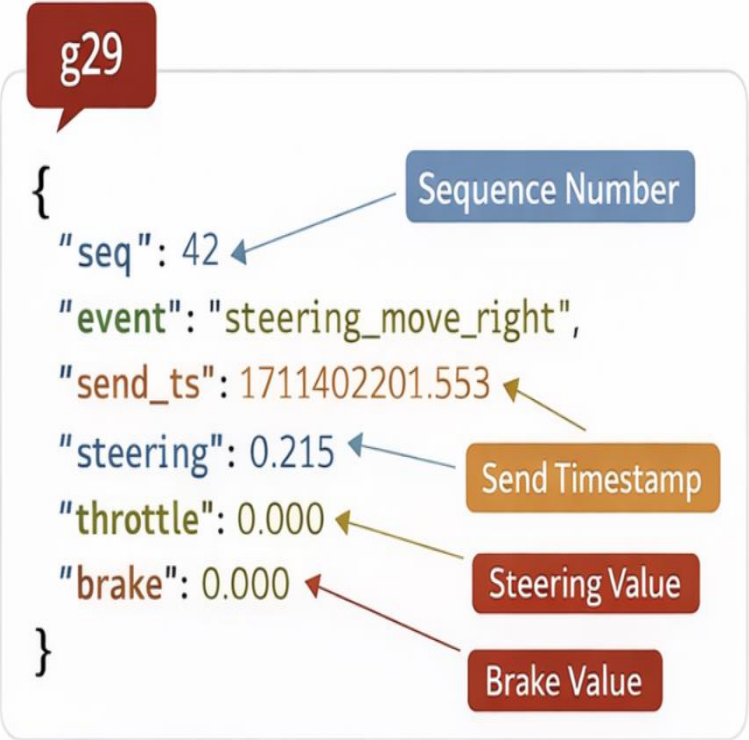

Key Design Decisions

laptop (serial)

- Looked into Bluepad32, decided to use pygame
  - Pygame is more precise for capturing data from Logitech G29 because of the 16-bit resolution input
  - We want to use pygame instead of bluepad32 because we do not want to use Bluetooth
- In our test rig, one laptop is sending data to another laptop via ESP32
  - This facilitates ease of testing/logging and adaptability to the incumbent lab car rig
- ZeroMQ Pivot from MQTT
  - Brokerless, ZeroMQ allows peer-to-peer connection between driver and receiver
  - Reduced overhead, PUB/SUB pattern eliminates processing delay
  - High frequency architecture able to support 100Hz telemetry stream, receiver gets data every 10ms

wireless (4G LTE)

laptop (serial)

Integration Progress

- **Connected to Logitech G29** and normalized **steering, throttle, and brake data**
- Debugging Apple Silicon driver conflicts
- Created **a handshake with Ousmane** with data transmitting successfully
- **Data latency** has surpassed our target
- Fail-Safe: If signal drops, system defaults to 0
- Need to get an acknowledgement from the ESP32

Testing

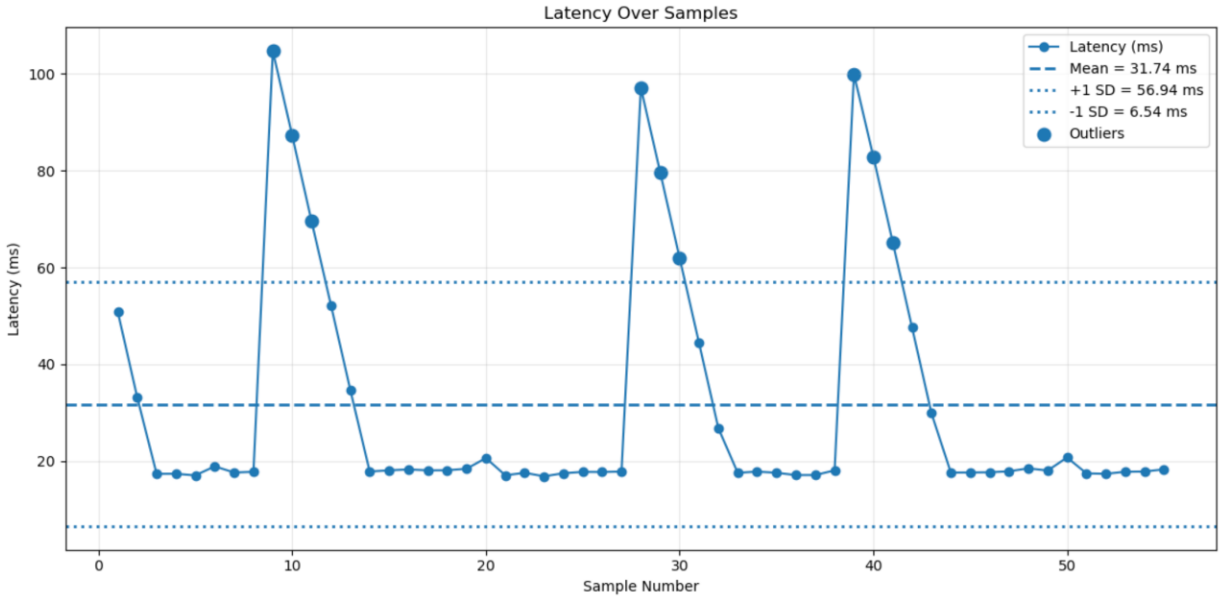

- Latency between driver workstation and receiving terminal
- Initial target of 100ms
- On average, ~32ms delay, well below human reaction time
- Loop runs at 100Hz (10ms intervals)- prevents packet buffering
- Measured from differing distances

```
RECEIVED | seq=8961 | event=None | latency=103.64 ms | steer=-0.032 | gas=1.000 | brake=0.631
RECEIVED | seq=8962 | event=None | latency=86.16 ms | steer=-0.032 | gas=1.000 | brake=0.631
RECEIVED | seq=8963 | event=None | latency=68.73 ms | steer=-0.032 | gas=1.000 | brake=0.631
RECEIVED | seq=8964 | event=None | latency=51.54 ms | steer=-0.032 | gas=1.000 | brake=0.631
RECEIVED | seq=8965 | event=None | latency=33.83 ms | steer=-0.032 | gas=1.000 | brake=0.631
RECEIVED | seq=8966 | event=None | latency=16.10 ms | steer=-0.032 | gas=1.000 | brake=0.631
RECEIVED | seq=8967 | event=None | latency=13.91 ms | steer=-0.032 | gas=1.000 | brake=0.631
RECEIVED | seq=8968 | event=None | latency=15.22 ms | steer=-0.032 | gas=1.000 | brake=0.631
RECEIVED | seq=8969 | event=None | latency=15.45 ms | steer=-0.032 | gas=1.000 | brake=0.631
RECEIVED | seq=8970 | event=None | latency=13.11 ms | steer=-0.032 | gas=1.000 | brake=0.635
RECEIVED | seq=8971 | event=None | latency=13.95 ms | steer=-0.032 | gas=1.000 | brake=0.635
RECEIVED | seq=8972 | event=None | latency=13.83 ms | steer=-0.031 | gas=1.000 | brake=0.635
RECEIVED | seq=8973 | event=None | latency=13.69 ms | steer=-0.031 | gas=1.000 | brake=0.635
RECEIVED | seq=8974 | event=None | latency=13.65 ms | steer=-0.031 | gas=1.000 | brake=0.635
RECEIVED | seq=8975 | event=None | latency=13.94 ms | steer=-0.030 | gas=1.000 | brake=0.635
RECEIVED | seq=8976 | event=None | latency=13.20 ms | steer=-0.028 | gas=1.000 | brake=0.635
RECEIVED | seq=8977 | event=None | latency=13.58 ms | steer=-0.027 | gas=1.000 | brake=0.635
RECEIVED | seq=8978 | event=None | latency=13.42 ms | steer=-0.026 | gas=1.000 | brake=0.635
RECEIVED | seq=8979 | event=None | latency=12.98 ms | steer=-0.024 | gas=1.000 | brake=0.635
RECEIVED | seq=8980 | event=None | latency=15.96 ms | steer=-0.022 | gas=1.000 | brake=0.635
RECEIVED | seq=8981 | event=None | latency=13.65 ms | steer=-0.020 | gas=1.000 | brake=0.635
RECEIVED | seq=8982 | event=None | latency=14.36 ms | steer=-0.018 | gas=1.000 | brake=0.635
RECEIVED | seq=8983 | event=None | latency=13.43 ms | steer=-0.016 | gas=1.000 | brake=0.635
RECEIVED | seq=8984 | event=None | latency=13.87 ms | steer=-0.015 | gas=1.000 | brake=0.635
RECEIVED | seq=8985 | event=None | latency=13.13 ms | steer=-0.014 | gas=1.000 | brake=0.635
RECEIVED | seq=8986 | event=None | latency=13.92 ms | steer=-0.013 | gas=1.000 | brake=0.635
RECEIVED | seq=8987 | event=None | latency=12.73 ms | steer=-0.012 | gas=1.000 | brake=0.635
RECEIVED | seq=8988 | event=None | latency=13.35 ms | steer=-0.012 | gas=1.000 | brake=0.635
RECEIVED | seq=8989 | event=None | latency=13.42 ms | steer=-0.012 | gas=1.000 | brake=0.639
RECEIVED | seq=8990 | event=None | latency=13.38 ms | steer=-0.012 | gas=1.000 | brake=0.639
RECEIVED | seq=8991 | event=None | latency=98.95 ms | steer=-0.012 | gas=1.000 | brake=0.639
RECEIVED | seq=8992 | event=None | latency=81.17 ms | steer=-0.012 | gas=1.000 | brake=0.639
RECEIVED | seq=8993 | event=None | latency=63.53 ms | steer=-0.012 | gas=1.000 | brake=0.639
RECEIVED | seq=8994 | event=None | latency=46.61 ms | steer=-0.012 | gas=1.000 | brake=0.639
RECEIVED | seq=8995 | event=None | latency=29.70 ms | steer=-0.012 | gas=1.000 | brake=0.639
RECEIVED | seq=8996 | event=None | latency=13.48 ms | steer=-0.012 | gas=1.000 | brake=0.639
RECEIVED | seq=8997 | event=None | latency=13.51 ms | steer=-0.012 | gas=1.000 | brake=0.639
RECEIVED | seq=8998 | event=None | latency=15.61 ms | steer=-0.012 | gas=1.000 | brake=0.639
RECEIVED | seq=8999 | event=None | latency=21.77 ms | steer=-0.012 | gas=1.000 | brake=0.639
RECEIVED | seq=9000 | event=None | latency=13.18 ms | steer=-0.012 | gas=1.000 | brake=0.639
RECEIVED | seq=9001 | event=None | latency=13.65 ms | steer=-0.012 | gas=1.000 | brake=0.639
RECEIVED | seq=9002 | event=None | latency=13.49 ms | steer=-0.012 | gas=1.000 | brake=0.639
RECEIVED | seq=9003 | event=None | latency=13.46 ms | steer=-0.012 | gas=1.000 | brake=0.639
RECEIVED | seq=9004 | event=None | latency=13.30 ms | steer=-0.012 | gas=1.000 | brake=0.639
RECEIVED | seq=9005 | event=None | latency=12.97 ms | steer=-0.012 | gas=1.000 | brake=0.639
RECEIVED | seq=9006 | event=None | latency=13.43 ms | steer=-0.012 | gas=1.000 | brake=0.639
RECEIVED | seq=9007 | event=None | latency=15.66 ms | steer=-0.012 | gas=1.000 | brake=0.639
RECEIVED | seq=9008 | event=None | latency=13.40 ms | steer=-0.012 | gas=1.000 | brake=0.639
RECEIVED | seq=9009 | event=None | latency=13.18 ms | steer=-0.012 | gas=1.000 | brake=0.639
RECEIVED | seq=9010 | event=None | latency=14.90 ms | steer=-0.012 | gas=1.000 | brake=0.639
RECEIVED | seq=9011 | event=None | latency=14.22 ms | steer=-0.012 | gas=1.000 | brake=0.639
RECEIVED | seq=9012 | event=None | latency=13.81 ms | steer=-0.012 | gas=1.000 | brake=0.639
RECEIVED | seq=9013 | event=None | latency=14.19 ms | steer=-0.012 | gas=1.000 | brake=0.639
RECEIVED | seq=9014 | event=None | latency=12.76 ms | steer=-0.012 | gas=1.000 | brake=0.639
RECEIVED | seq=9015 | event=None | latency=12.84 ms | steer=-0.012 | gas=1.000 | brake=0.639
RECEIVED | seq=9016 | event=None | latency=12.87 ms | steer=-0.012 | gas=1.000 | brake=0.639
```

Safety

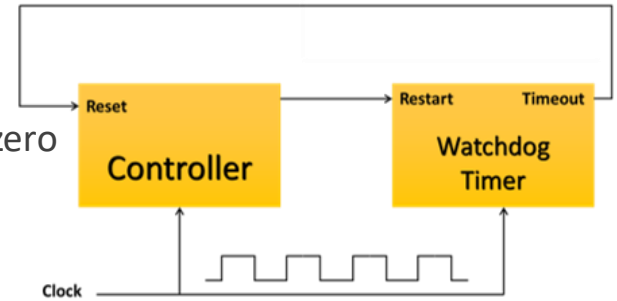

- Communication loss
  - Watchdog timer will trigger an automatic stop/values transmitted will zero
  - Sustained latency (250ms for more than 2-3 seconds) will trigger a stop
  - Reminder: current packet rate is an arbitrary 100 Hz
- Connectivity recommendations
  - We suggest upgrading to 5G and looking towards Starlink in the future
  - Currently, 4G LTE averages 30-50ms latency and 5G averages 10-30ms; 4G LTE works well, but a higher rate of jitter poses a safety concern
  - Starlink is currently too unreliable (too much variability) for sustained use, although in real life testing it is useful as a safety backup (tradeoff is cost)
  - Keep an eye out for the **Starlink v3 constellation** and 5G DTC (direct to cell)

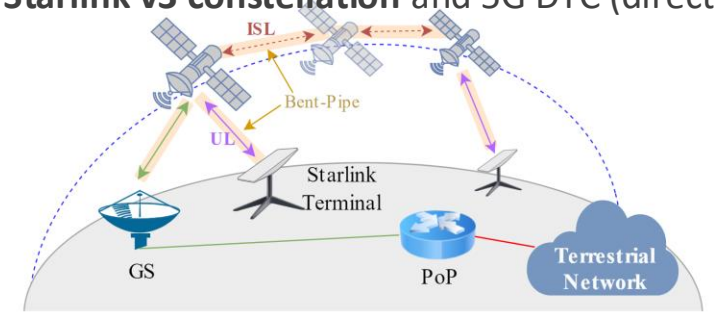

Budget/BoM

Item	Cost	In Lab Inventory?
Driving Simulator	~$300	Yes
ESP32 x2	~$15	Yes
Wires + Cables	Nominal (~$20)	Yes

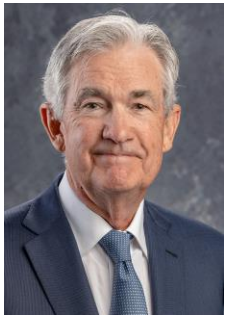

Looking Ahead

- Take and implement recommendations/action items
  - Any other safety recommendations? We feel like the #1 safety concern are **spikes in latency**
- Connect system to car and test in real life
  - We need to get a better idea how our system performs outside of our test setting
  - Currently we are benchmarking using **wifi**, not 4G LTE.... our numbers will likely get worse
  - Controlling the car via CAN bus will also add latency
  - Do we need to implement methods (stripping back packet complexity, adopting leaner software packages) that will nominally but noticeably reduce latency?
- Set groundwork for handoff
  - Build uptime/latency/current state GUI dashboard (software package works with macOS or Windows
  - Record a ground truth dataset (i.e. timestamped G29 inputs vs actual vehicle response)

Questions?

Backup Slides

Driving Sim Software Block Diagram

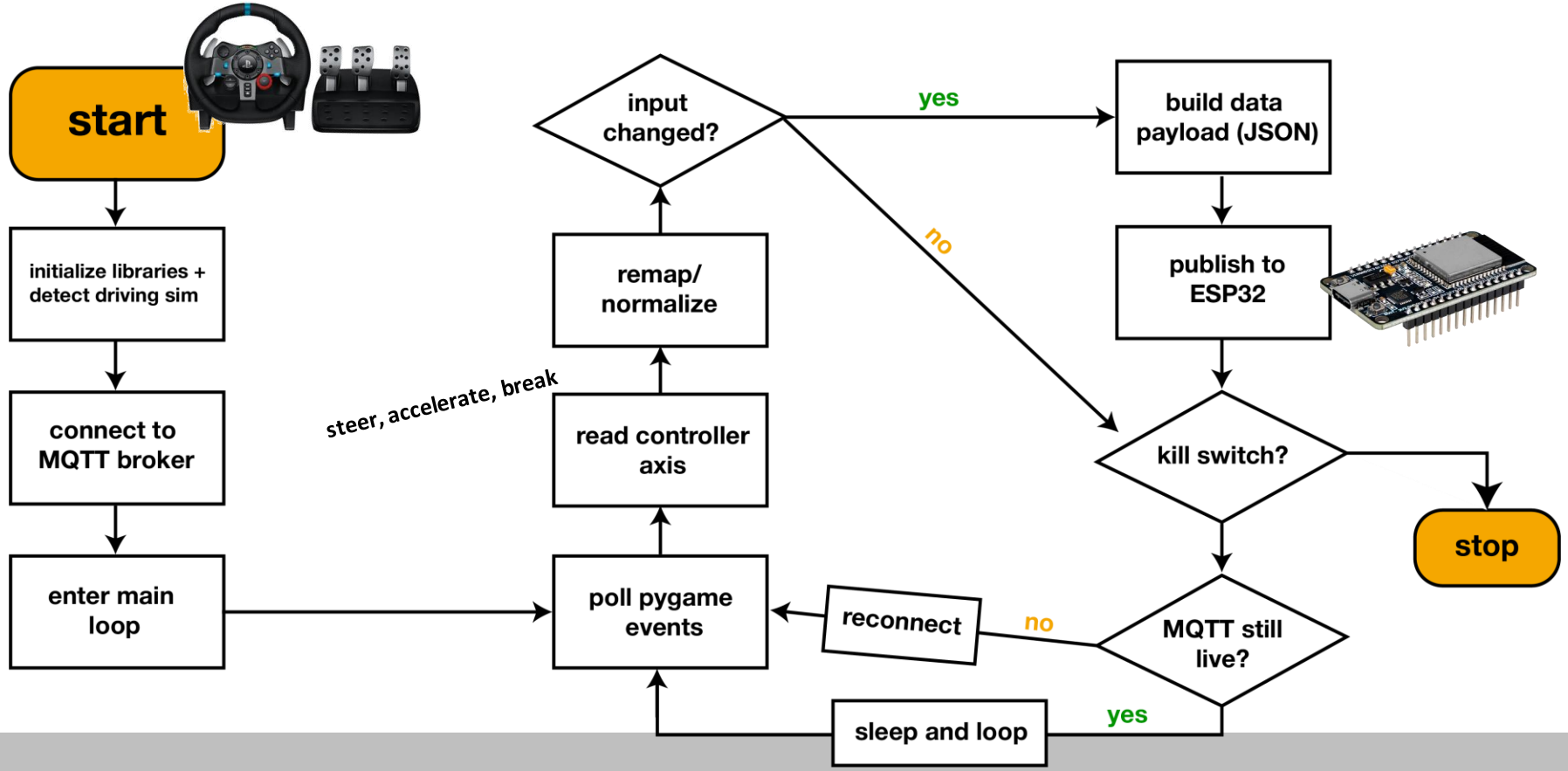

ESP32 Software Block Diagram

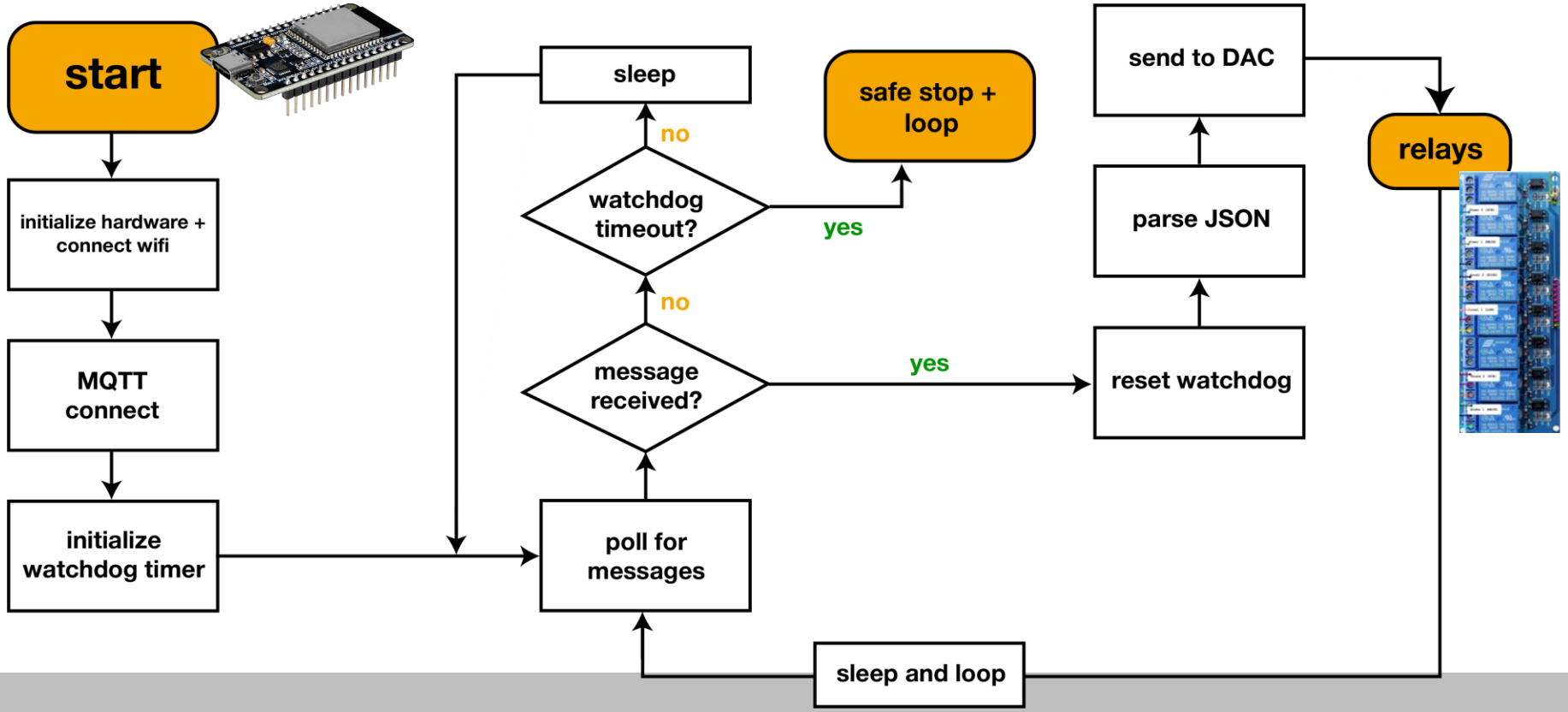

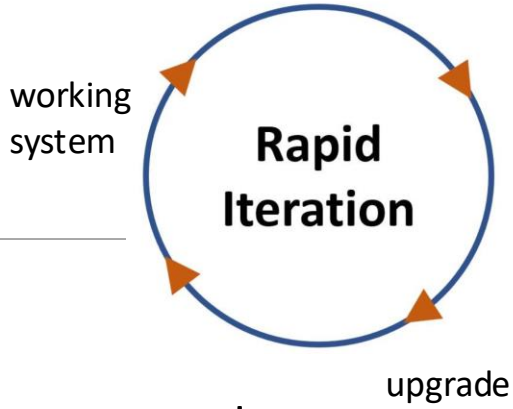

Major Tradeoff Issues

Simplicity -> Complexity

ZeroMQ vs other protocols

- Other protocols/methods of remotely communication may reduce latency
- Better to start simple and add complexity later

G29 vs PS5 controller

- The G29 is more reliable and provides a closer simulation to real life
- Instead of Bluetooth, we can use a more customizable communication protocol