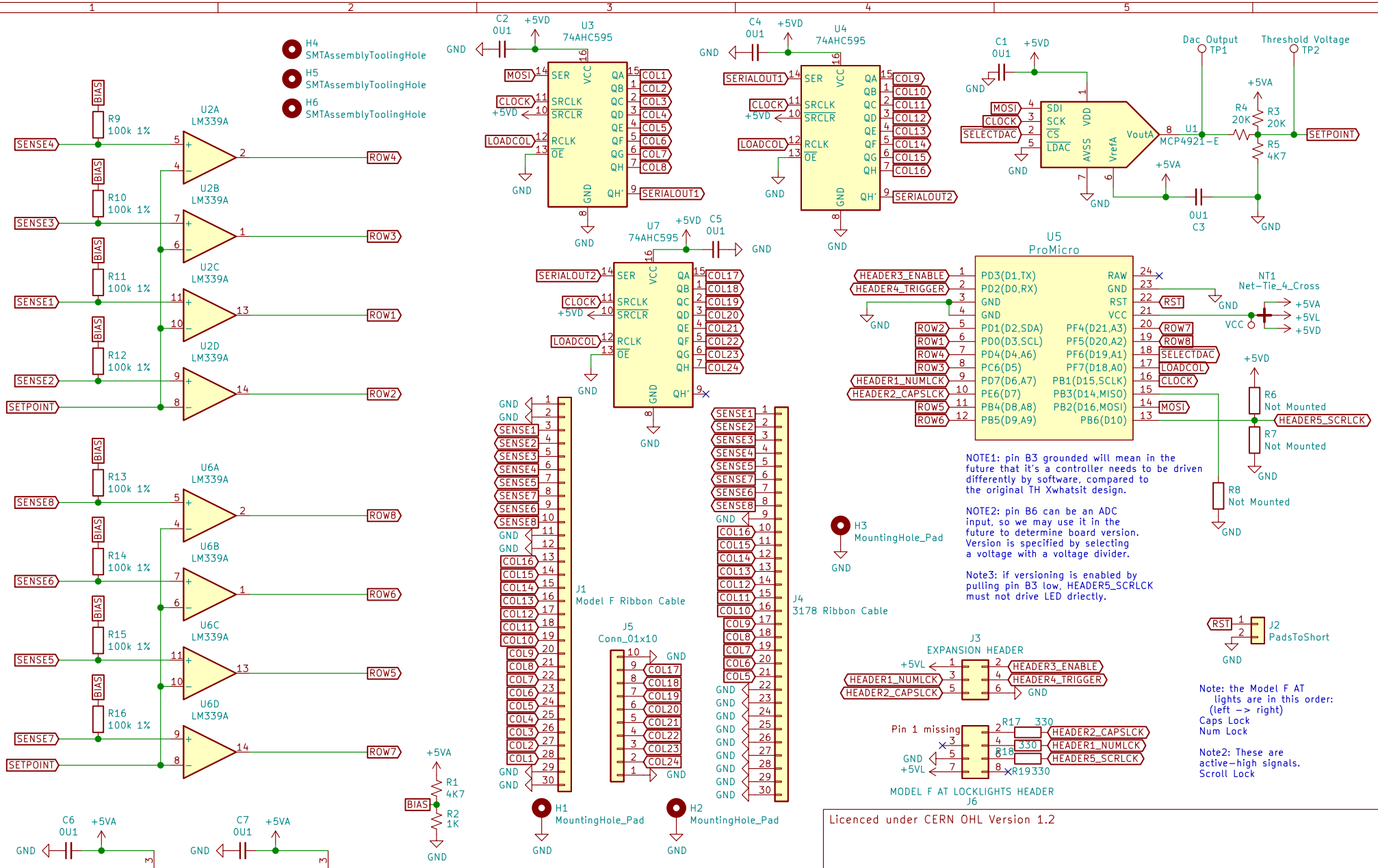

Copyright Rainy Day Plans.
This documentation describes Open Hardware and is licensed under the CERN OHL v. 1.2.
You may redistribute and modify this documentation under the terms of the CERN OHL v.1.2. (http://ohwr.org/cernohl). This documentation is distributed WITHOUT ANY EXPRESS OR IMPLIED WARRANTY, INCLUDING OF MERCHANTABILITY, SATISFACTORY QUALITY AND FITNESS FOR A PARTICULAR PURPOSE. Please see the CERN OHL v.1.2 for applicable conditions

Licenced under CERN OHL Version 1.2

Rainy Day Plans

Sheet: /
File: SMDModelF.sch

Title: SMD Model F Controller Based on TH Xwhatsit

Size: A4	Date: 2020-01-31	Rev: 1.0
KiCad E.D.A. kicad 5.1.6+dfsg1-1bpo10+1		Id: 1/1