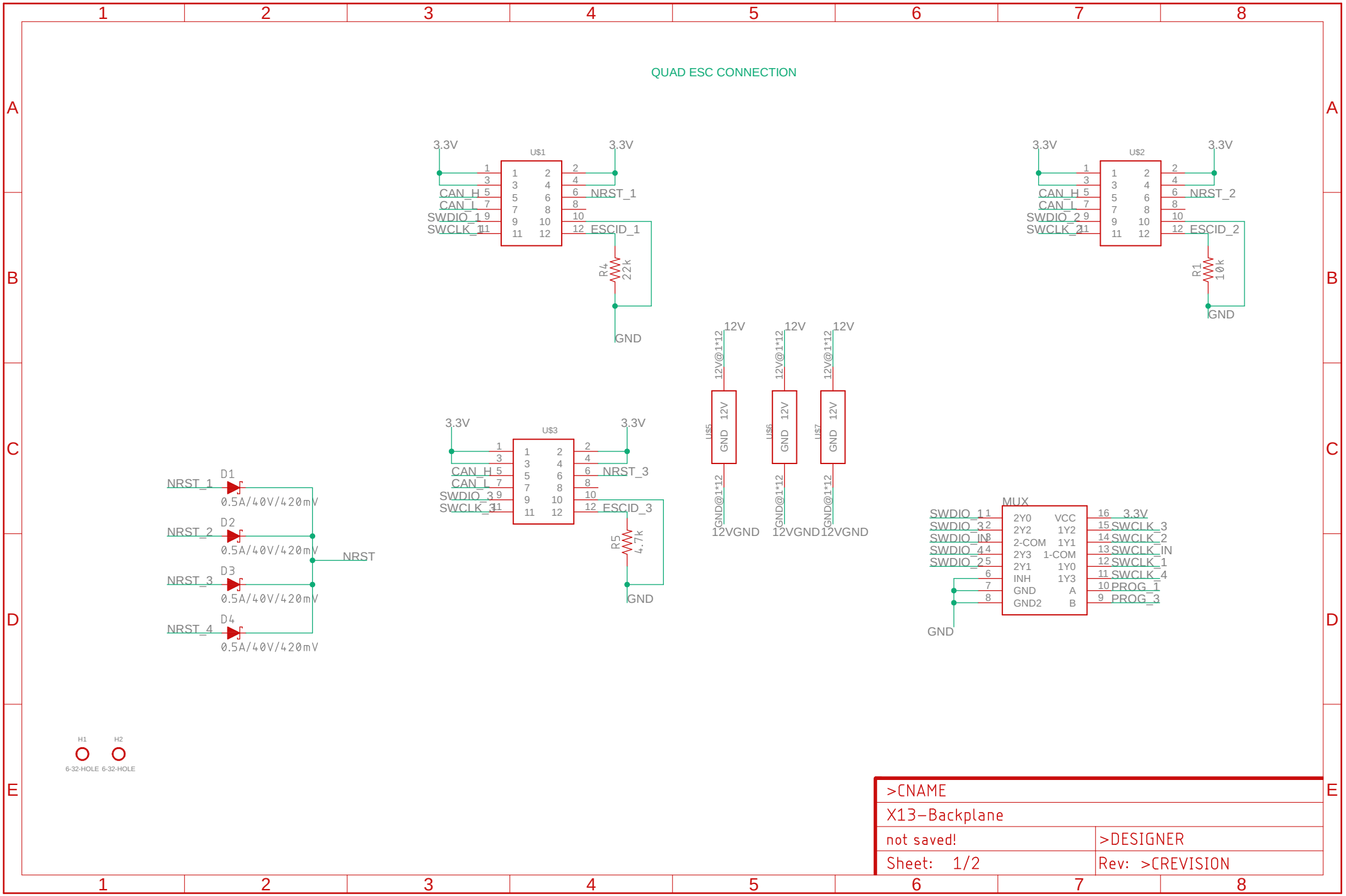
QUAD ESC CONNECTION
U$1
3.3V
CAN_H
CAN_L
SWDIO_1
SWCLK_1
NRST_1
ESCID_1
R4
22k
GND
U$2
NRST_2
ESCID_2
R1
10k
U$3
NRST_3
ESCID_3
R5
4.7k
12V
12V@1*12
GND@1*12
12VGND
U$5
U$6
U$7
D1
D2
D3
D4
NRST_1
NRST_2
NRST_3
NRST_4
0.5A/40V/420mV
NRST
MUX
2Y0
2Y2
2-COM
2Y3
2Y1
INH
GND
GND2
VCC
1Y2
1Y1
1-COM
1Y0
1Y3
A
B
SWDIO_1
SWDIO_3
SWDIO_IN
SWDIO_4
SWDIO_2
SWCLK_3
SWCLK_2
SWCLK_IN
SWCLK_1
SWCLK_4
PROG_1
PROG_3
H1
H2
6-32-HOLE
>CNAME
X13-Backplane
not saved!
>DESIGNER
Sheet: 1/2
Rev: >CREVISION

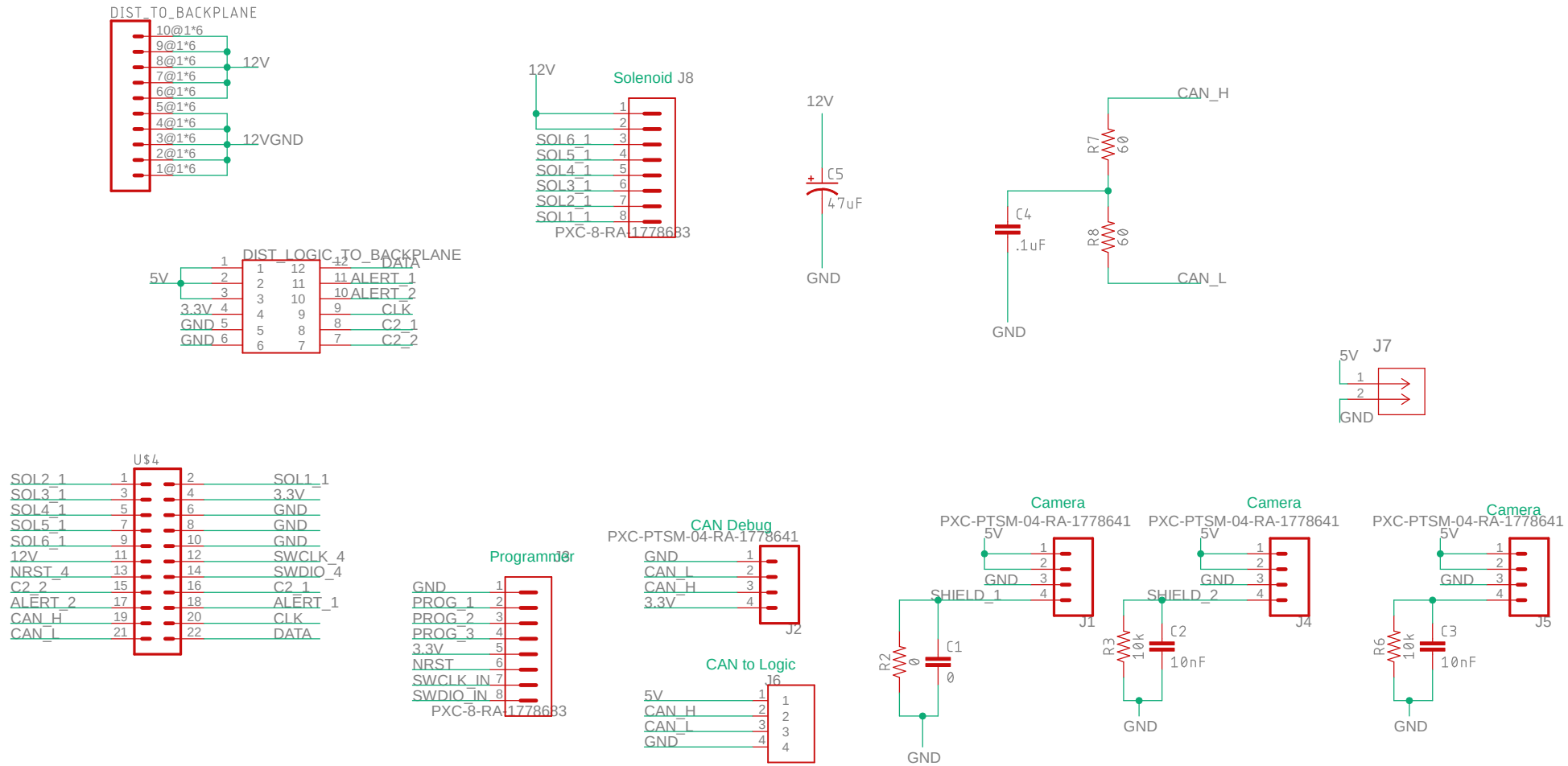

>CNAME	
X13-Backplane	
not saved!	>DESIGNER
Sheet: 2/2	Rev: >CREVISION