Low Power Digital Temperature Sensor With Two-Wire Serial Interface in WCSP

Check for Samples: TMP108

FEATURES

- **Dynamically-Programmable Limit Window with Under- and Overtemperature Alerts**
- **Accuracy:**
  ±0.75°C (max) from –20°C to +85°C
  ±1°C (max) from –40°C to +125°C
- **Low Quiescent Current:**
  6 µA Active (max) from –40°C to +125°C
- **Supply Range: 1.4 V to 3.6 V**
- **Resolution: 12 Bits (0.0625°C)**
- **Package: 1.2-mm × 0.8-mm, 6-Ball WCSP**

APPLICATIONS

- **Smartphone and Tablet Thermal Management**
- **Battery Management**
- **Thermostat Control**
- **Under- and Overtemperature Protection**
- **Environmental Monitoring and HVAC**

DESCRIPTION

TMP108 is a digital-output temperature sensor with a dynamically-programmable limit window, and under- and overtemperature alert functions. These features provide optimized temperature control without the need of frequent temperature readings by the controller or application processor.

The TMP108 features SMBus™ and two-wire interface compatibility, and allows up to four devices on one bus with the SMBus alert function.

The TMP108 is ideal for thermal management optimization in a variety of consumer, computer, and environmental applications. The device is specified over a temperature range of –40°C to +125°C.

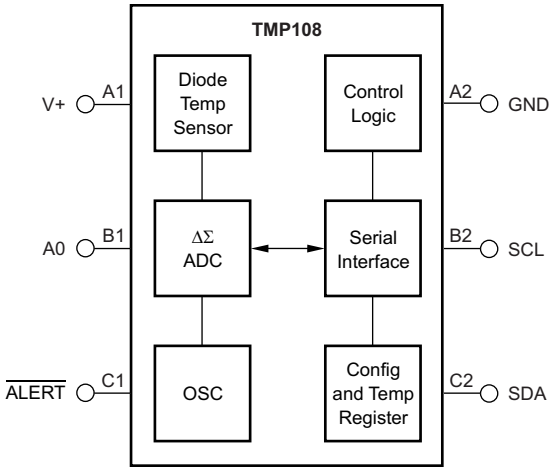

Please be aware that an important notice concerning availability, standard warranty, and use in critical applications of Texas Instruments semiconductor products and disclaimers thereto appears at the end of this data sheet.

SMBus is a trademark of Intel, Inc.
All other trademarks are the property of their respective owners.

PRODUCTION DATA information is current as of publication date. Products conform to specifications per the terms of the Texas Instruments standard warranty. Production processing does not necessarily include testing of all parameters.

Copyright © 2013, Texas Instruments Incorporated

This integrated circuit can be damaged by ESD. Texas Instruments recommends that all integrated circuits be handled with appropriate precautions. Failure to observe proper handling and installation procedures can cause damage.

ESD damage can range from subtle performance degradation to complete device failure. Precision integrated circuits may be more susceptible to damage because very small parametric changes could cause the device not to meet its published specifications.

ORDERING INFORMATION(1)

(1) For the most current package and ordering information, see the Package Option Addendum at the end of this document, or see the TI web site at www.ti.com.

ABSOLUTE MAXIMUM RATINGS(1)

		TMP108	UNIT
Supply voltage		3.6	V
Input voltage for SDA and SCL(2)		–0.5 to 3.6	V
Input voltage for A0 and $\overline{\text{ALERT}}$		–0.5 to (V+) + 0.3	V
Operating temperature		–55 to +150	°C
Storage temperature		–60 to +150	°C
Junction temperature		+150	°C
Electrostatic discharge (ESD) ratings	Human body model (HBM)	2000	V
	Charged device model (CDM)	1000	V

(1) Stresses above these ratings may cause permanent damage. Exposure to absolute maximum conditions for extended periods may degrade device reliability. These are stress ratings only, and functional operation of the device at these or any other conditions beyond those specified is not supported.
(2) If A0 is connected to SCL or SDA, the input voltage rating for A0 applies to SCL or SDA.

PIN CONFIGURATION

YFF PACKAGE
DSBGA-6
(TOP VIEW)

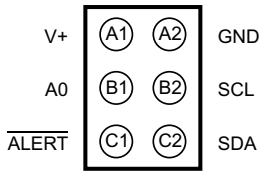

PIN DESCRIPTIONS

PIN NAME	PIN NUMBER	DESCRIPTION
A0	B1	Address selection pin
$\overline{\text{ALERT}}$	C1	Alert output pin
GND	A2	Ground
SCL	B2	Input clock pin
SDA	C2	Input/output data pin
V+	A1	Supply Voltage (1.4 V to 3.6 V)

Copyright © 2013, Texas Instruments Incorporated

ELECTRICAL CHARACTERISTICS

At T_A = +25°C, and V+ = +1.8 V, unless otherwise noted.

PARAMETER		CONDITIONS	TMP108 MIN	TMP108 TYP	TMP108 MAX	UNIT
TEMPERATURE INPUT						
	Range		–40		+125	°C
	Accuracy (temperature error)	–20°C to +85°C		±0.15	±0.75	°C
		–40°C to +125°C		±0.3	±1	°C
	Accuracy vs supply			±0.03	±0.3	°C/V
DIGITAL INPUT/OUTPUT						
V_{IH}	Input logic high level		0.7 (V+)		V+	V
V_{IL}	Input logic low level		-0.5		0.3 (V+)	V
I_{IN}	Input current	0 V < V_{IN} < (V+) +0.3 V			1	µA
V_{OL}	Output logic low level	V+ > 2 V, I_{OUT} = 3 mA			0.4	V
		V+ < 2 V, I_{OUT} = 3 mA			0.2 (V+)	V
	$\overline{\text{ALERT}}$ internal pull-up resistor	$\overline{\text{ALERT}}$ to V+	80	100	120	kΩ
	Resolution			12		Bit
	Conversion time	One-Shot mode	21	27	33	ms
	Conversion modes	CR1 = 0, CR0 = 0		0.25		Conv/s
		CR1 = 0, CR0 = 1 (default)		1		Conv/s
		CR1 = 1, CR0 = 0		4		Conv/s
		CR1 = 1, CR0 = 1		16		Conv/s
	Timeout time		21	28	35	ms
POWER SUPPLY						
	Operating supply range, V+ pin		1.4		3.6	V
I_Q	Quiescent current	Serial bus inactive, CR1 = 0, CR0 = 1 (default)		2	3.5	µA
		Serial bus inactive, CR1 = 0, CR0 = 1 (default), –40°C to +125°C			6	µA
		Serial bus active, SCL frequency = 400 kHz, CR1 = 0, CR0 = 1 (default)		12		µA
		Serial bus active, SCL frequency = 3.4 MHz, CR1 = 0, CR0 = 1 (default)		82		µA
I_{SD}	Shutdown current	Serial bus inactive		0.3	1	µA
		Serial bus active, SCL frequency = 400 kHz		10		µA
		Serial bus active, SCL frequency = 3.4 MHz		80		µA
TEMPERATURE						
	Specified range		–40		+125	°C
	Storage range		–55		+150	°C

THERMAL INFORMATION

THERMAL METRIC[1]		TMP108 YFF (DSBGA) 6 PINS	UNITS
θ_{JA}	Junction-to-ambient thermal resistance	132.7	°C/W
$\theta_{JC(top)}$	Junction-to-case(top) thermal resistance	1.7	
θ_{JB}	Junction-to-board thermal resistance	23	
ψ_{JT}	Junction-to-top characterization parameter	6	
ψ_{JB}	Junction-to-board characterization parameter	22.6	
$\theta_{JC(bottom)}$	Junction-to-case(bottom) thermal resistance	N/A	

(1) For more information about traditional and new thermal metrics, see the *IC Package Thermal Metrics* application report, SPRA953.

Copyright © 2013, Texas Instruments Incorporated

TYPICAL CHARACTERISTICS

At T_A = +25°C and V+ = 1.8 V, unless otherwise noted.

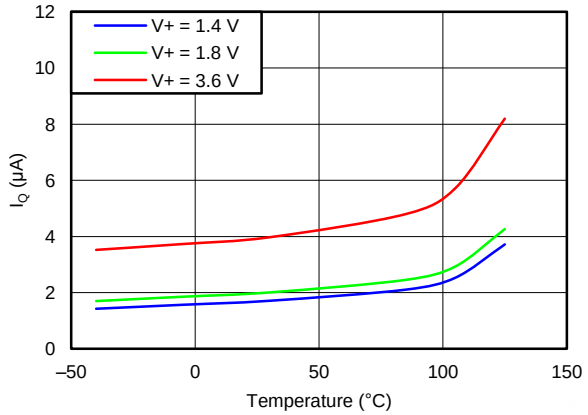

Figure 1. QUIESCENT CURRENT vs TEMPERATURE (1 Conversion per Second)

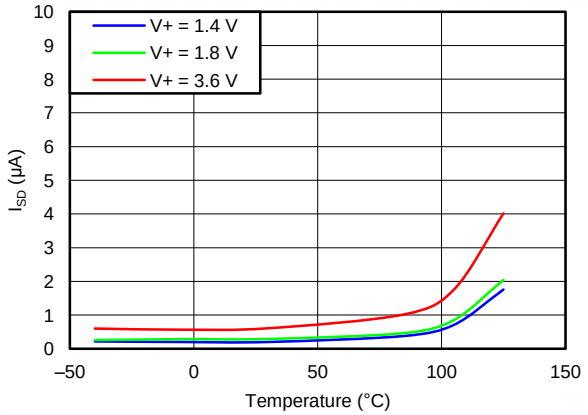

Figure 2. SHUTDOWN CURRENT vs TEMPERATURE

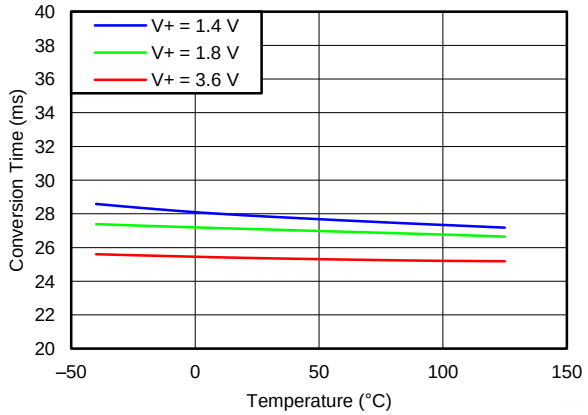

Figure 3. CONVERSION TIME vs TEMPERATURE

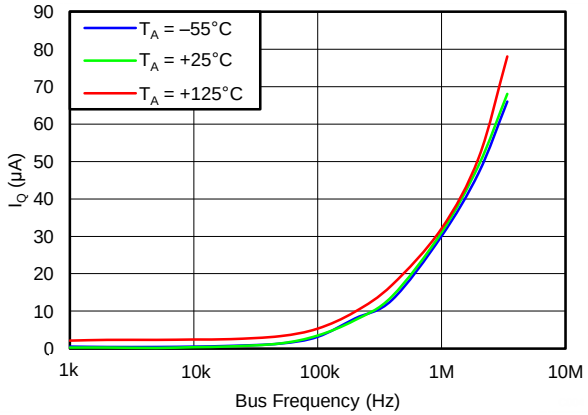

Figure 4. QUIESCENT CURRENT vs BUS FREQUENCY

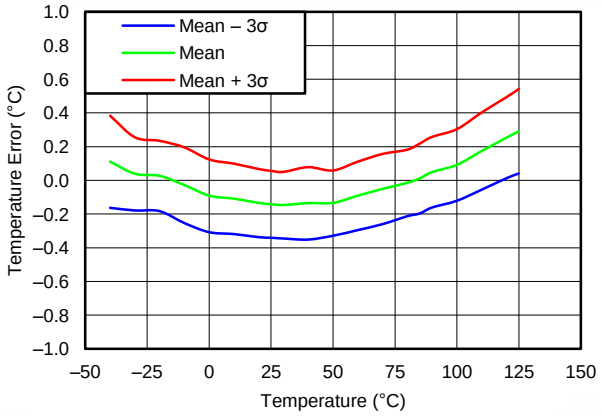

Figure 5. TEMPERATURE ERROR vs TEMPERATURE

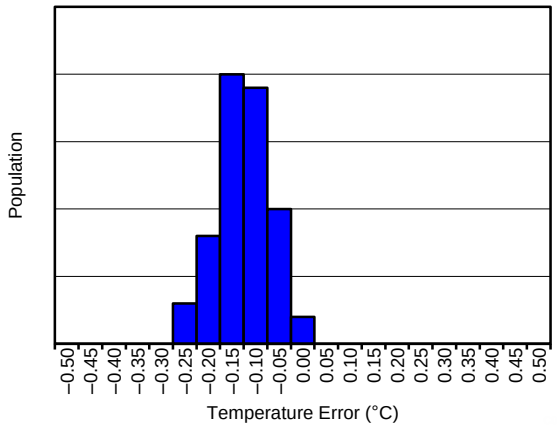

Figure 6. TEMPERATURE ERROR AT +25°C

Copyright © 2013, Texas Instruments Incorporated

APPLICATION INFORMATION

The TMP108 is a digital temperature sensor optimal for thermal management and thermal protection applications. The TMP108 is two-wire and SMBus Interface compatible, and is specified over a temperature range of –40°C to +125°C.

The TMP108 temperature sensor is the chip itself; the solder bumps provide the primary thermal path as a result of the lower thermal resistance of metal. The temperature sensor result is equivalent to the local temperature of the printed circuit board (PCB) on which the sensor is mounted.

The TMP108 only requires pull-up resistors on SCL and SDA; although, a 0.01 µF bypass capacitor is recommended, as shown in Figure 7. There is an internal 100 kΩ pull-up resistor connected to supply on the $\overline{\text{ALERT}}$ pin. If required, use an external resistor of smaller value on the $\overline{\text{ALERT}}$ pin for a stronger pull-up to V+. The SCL and SDA lines can be pulled up to a supply that is equal to or higher than V+ through the pull-up resistors. To configure one of four different addresses on the bus, connect A0 to either V+, GND, SCL, or SDA. If A0 is connected to SCL or SDA, make their pull-up supply equal to V+.

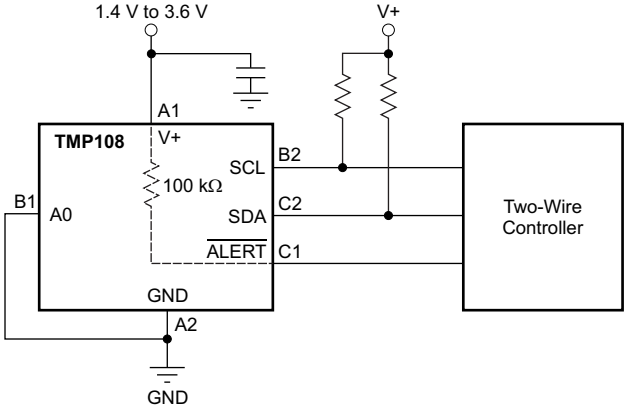

Figure 7. Typical Application Circuit

POINTER REGISTER

Figure 8 shows the internal register structure of the TMP108. Use the 8-bit pointer register to address a given data register. The pointer register uses the two LSBs (see Table 10) to identify which of the data registers respond to a read or write command. Table 1 identifies the bits of the pointer register byte. Table 2 describes the pointer address of the registers available in the TMP108. The power-up reset value of the P1 and P0 bits is '00'.

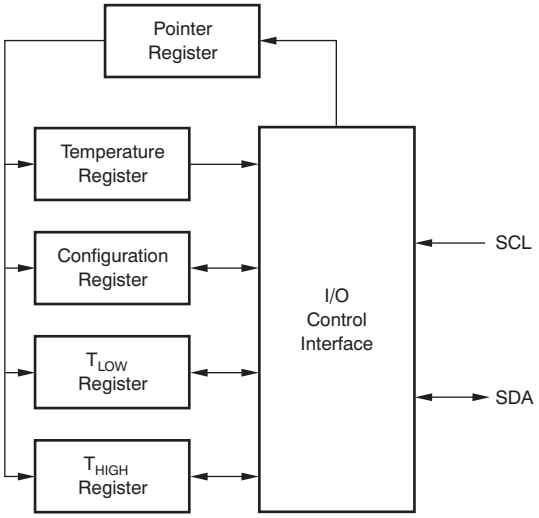

Figure 8. Internal Register Structure

Table 1. Pointer Register Byte

P7	P6	P5	P4	P3	P2	P1	P0
0	0	0	0	0	0	Register Bits	

Table 2. Pointer Addresses

P1	P0	REGISTER
0	0	Temperature register (read only, default)
0	1	Configuration register (read/write)
1	0	T_{LOW} register (read/write)
1	1	T_{HIGH} register (read/write)

Copyright © 2013, Texas Instruments Incorporated

TEMPERATURE REGISTER

The temperature register is configured as a 12-bit, read-only register that stores the output of the most recent conversion. Two bytes must be read to obtain data, as shown in Table 3 and Table 4. Note that byte 1 is the most significant byte, followed by byte 2, the least significant byte. The first 12 bits are used to indicate temperature. There is no requirement to read the least significant byte if that information is not needed (for example, for resolution lower than 1°C). Table 5 summarizes the temperature data format. One LSB equals 0.0625°C. Negative numbers are represented in binary twos complement format. Following power-up or reset, the temperature register reads 0°C until the first conversion is complete. The unused bits in the temperature register always read '0'.

Table 3. Byte 1 of Temperature Register

D7	D6	D5	D4	D3	D2	D1	D0
T11	T10	T9	T8	T7	T6	T5	T4

Table 4. Byte 2 of Temperature Register

D7	D6	D5	D4	D3	D2	D1	D0
T3	T2	T1	T0	0	0	0	0

Table 5. Temperature Data Format(1)

TEMPERATURE (°C)	DIGITAL OUTPUT	
	BINARY	HEX
128	0111 1111 1111	7FF
127.9375	0111 1111 1111	7FF
100	0110 0100 0000	640
80	0101 0000 0000	500
75	0100 1011 0000	4B0
50	0011 0010 0000	320
25	0001 1001 0000	190
0.25	0000 0000 0100	004
0	0000 0000 0000	000
–0.25	1111 1111 1100	FFC
–25	1110 0111 0000	E70
–55	1100 1001 0000	C90

(1) The temperature sensor ADC resolution is 0.0625°C/count.

Table 5 does not supply a full list of all temperatures. Use the following rules to obtain the digital data format for a given temperature.

To convert positive temperatures to a digital data format:

Divide the temperature by the resolution. Then, convert the result to binary code with a 12-bit, left-justified format, and MSB = 0 to denote a positive sign.

Example: (+50°C)/(0.0625°C/count) = 800 = 320h = 0011 0010 0000

To convert negative temperatures to a digital data format:

Divide the absolute value of the temperature by the resolution, and convert the result to binary code with a 12-bit, left-justified format. Then, generate the twos complement of the result by complementing the binary number and adding one. Denote a negative number with MSB = 1.

Example: (|–25°C|)/(0.0625°C/count) = 400 = 190h = 0001 1001 0000

Twos complement format: 1110 0110 1111 + 1 = 1110 0111 0000

Copyright © 2013, Texas Instruments Incorporated

CONFIGURATION REGISTER

The configuration register is a 16-bit read and write register used to store bits that control the operational modes of the temperature sensor. Read and write operations are performed MSB first. The format and power-up (reset) default value of the configuration register is shown in Table 6, followed by an explanation of the register bits. Other options for the default values are available by request.

Table 6. Configuration and Power-Up/Reset Format

BYTE	D7	D6	D5	D4	D3	D2	D1	D0
1	ID	CR1	CR0	FH	FL	TM	M1	M0
	0	0	1	0	0	1	1	0
2	POL	0	HYS1	HYS0	0	0	0	0
	0	0	0	1	0	0	0	0

Hysteresis Control (HYS1 and HYS0)

When operating in comparator mode, the hysteresis control bits (HYS1 and HYS0) configure the hysteresis for the limit comparison of the TMP108 to 0°C, 1°C, 2°C, or 4°C. The default hysteresis is 1°C. Table 7 shows the settings for HYS1 and HYS0.

Table 7. Hysteresis Settings

HYS1	HYS0	HYSTERESIS
0	0	0°C
0	1	1°C (default)
1	0	2°C
1	1	4°C

Polarity (POL)

The polarity of the $\overline{\text{ALERT}}$ pin can be programmed using the POL bit. If POL = '0' (default), the $\overline{\text{ALERT}}$ is active low. For POL = '1', the $\overline{\text{ALERT}}$ pin is active high, and the state of the $\overline{\text{ALERT}}$ pin is inverted.

Mode Bits (M1 and M0)

The mode bits, M1 and M0, can be set to three different modes: shutdown, one-shot, or continuous conversion.

Shutdown Mode (M1 = '0', M0 = '0')

Shutdown mode saves power by shutting down all device circuitry other than the serial interface, thus reducing current consumption to typically less than 0.5 µA. Shutdown mode is enabled when M1 and M0 = '00'. The device shuts down when current conversion is completed.

One-Shot Mode (M1 = '0', M0 = '1')

The TMP108 features a *one-shot* temperature measurement mode. When the device is in shutdown mode, writing a ‘01’ to the M1 and M0 bits starts a single temperature conversion. During the conversion, the M1 and M0 bits reads '01'. The device returns to the shutdown state at the completion of the single conversion. After the conversion, the M1 and M0 bits read '00'. This feature is useful for reducing the power consumption of the TMP108 when continuous temperature monitoring is not required.

As a result of the short conversion time, the TMP108 can achieve a higher conversion rate. A single conversion typically takes 27 ms and a read can take place in less than 20 µs. However, when using one-shot mode, 30 or more conversions per second are possible.

Continuous Conversion Mode (M1 = '1')

When the TMP108 is in continuous conversion mode (M1 = '1'), a single conversion is performed at a rate determined by the conversion rate bits (CR1 and CR0 in the configuration register). The TMP108 performs a single conversion, and then goes in standby and waits for the appropriate delay set by the CR1 and CR0 bits. See Table 8 for CR1 and CR0 settings.

Copyright © 2013, Texas Instruments Incorporated

Thermostat Mode (TM)

The thermostat mode bit indicates to the device whether to operate in comparator mode (TM = '0') or interrupt mode (TM = '1', default). For more information on comparator and interrupt modes, see the *High- and Low-Limit Registers* section.

Temperature Watchdog Flags (FL and FH)

The TMP108 uses temperature watchdog flags in the configuration register that indicate the result of comparing the device temperature at the end of every conversion to the values stored in the temperature limit registers (T_{HIGH} and T_{LOW}). If the temperature of the TMP108 exceeds the value in the T_{HIGH} register, then the flag-high bit (FH) in the configuration register is set to '1'. If the temperature falls below the value in the T_{LOW} register, then the flag-low bit (FL) is set to '1'. If both flag bits remain '0', then the temperature is within the temperature range set by the temperature limit registers. In interrupt mode, when any of the flags is set by an under- or overtemperature event, the SMBus ALERT Response only clears the pin and not the flags. Reading the configuration register clears both the flags and the pin.

Conversion Rate

The conversion rate bits, CR1 and CR0, configure the TMP108 for conversion rates of 0.25 Hz, 1 Hz, 4 Hz, or 16 Hz. The default rate is 1 Hz. The TMP108 has a typical conversion time of 27 ms. To achieve different conversion rates, the TMP108 makes a conversion, and then powers down and waits for the appropriate delay set by CR1 and CR0. Table 8 shows the settings for CR1 and CR0.

Table 8. Conversion Rate Settings

CR1	CR0	CONVERSION RATE	I_Q (TYP)
0	0	0.25 Hz	1 µA
0	1	1 Hz (default)	2 µA
1	0	4 Hz	5 µA
1	1	16 Hz	18 µA

After power-up or a general-call reset, the TMP108 immediately starts a conversion, as shown in Figure 9. The first result is available after 27 ms (typical). The active quiescent current during conversion is 40 µA (typical at +25°C). The quiescent current during delay is 0.7 µA (typical at +25°C).

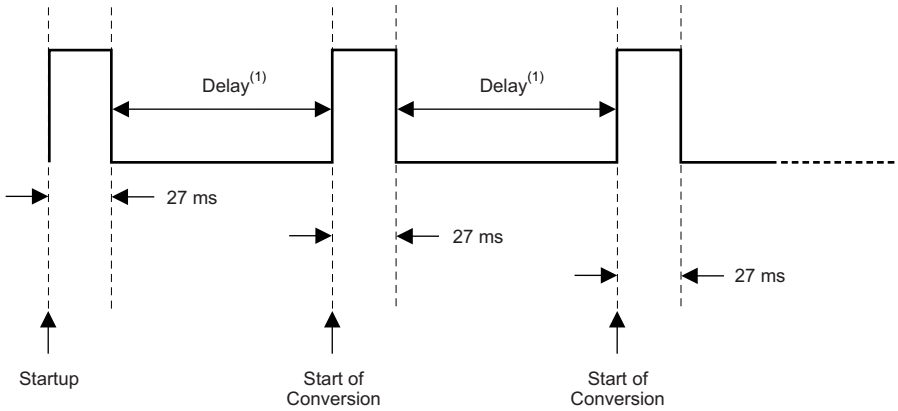

(1) Delay is set by the CR1 and CR0 bits in the configuration register.

Figure 9. Conversion Start

HIGH- AND LOW-LIMIT REGISTERS

In comparator mode (TM = '0'), the $\overline{\text{ALERT}}$ pin becomes active when the temperature exceeds the value in the T_{HIGH} register or drops below the value in the T_{LOW} register. The $\overline{\text{ALERT}}$ pin remains active until the temperature returns to a value that is within the range set by:

$(T_{LOW} + HYS)$ and $(T_{HIGH} – HYS)$

where

- HYS is the hysteresis set by the hysteresis control bits (HYS1 and HYS0). (1)

In interrupt mode (TM = '1'), the $\overline{\text{ALERT}}$ pin becomes active when the temperature exceeds the value in the T_{HIGH} register or drops below the value in the T_{LOW} register, and remains active until a read operation of the configuration register occurs (also clears the values latched in the watchdog flags, FL and FH), or the device successfully responds to the SMBus alert response address. The $\overline{\text{ALERT}}$ pin is also cleared by resetting the device with the general call reset command.

Both operational modes are represented in Figure 10 and Figure 11.

Table 9 and Table 10 describe the format for the T_{HIGH} and T_{LOW} registers. Note that the most significant byte is sent first, followed by the least significant byte. Power-up (reset) default values are T_{HIGH} = +127.9375°C and T_{LOW} = –128°C. These values ensure that upon power-up, the limit window is set to maximum, and the $\overline{\text{ALERT}}$ pin does not become active until the desired limit values are programmed in the registers. Other default values for the temperature limits are availlable by request. The format of the data for T_{HIGH} and T_{LOW} is the same as for the temperature register.

Table 9. Bytes 1 and 2 of T_{HIGH} Register

BYTE	D7	D6	D5	D4	D3	D2	D1	D0
1	H11	H10	H9	H8	H7	H6	H5	H4
BYTE	**D7**	**D6**	**D5**	**D4**	**D3**	**D2**	**D1**	**D0**
2	H3	H2	H1	H0	0	0	0	0

Table 10. Bytes 1 and 2 of T_{LOW} Register

BYTE	D7	D6	D5	D4	D3	D2	D1	D0
1	L11	L10	L9	L8	L7	L6	L5	L4
BYTE	**D7**	**D6**	**D5**	**D4**	**D3**	**D2**	**D1**	**D0**
2	L3	L2	L1	L0	0	0	0	0

Copyright © 2013, Texas Instruments Incorporated

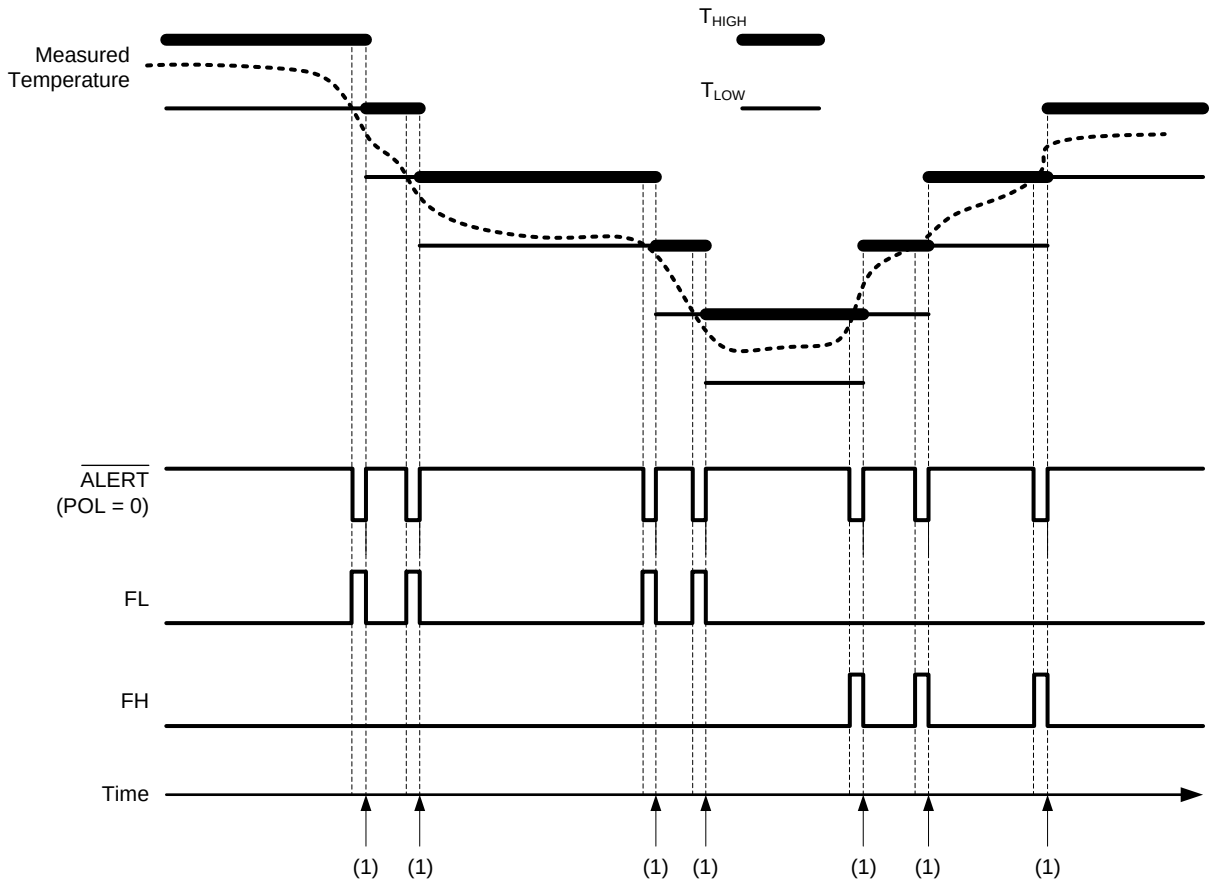

(1) Update T_{HIGH} and T_{LOW} limit. Read the configuration register to clear the flags and the $\overline{ALERT}$ pin.

Figure 10. Interrupt Mode

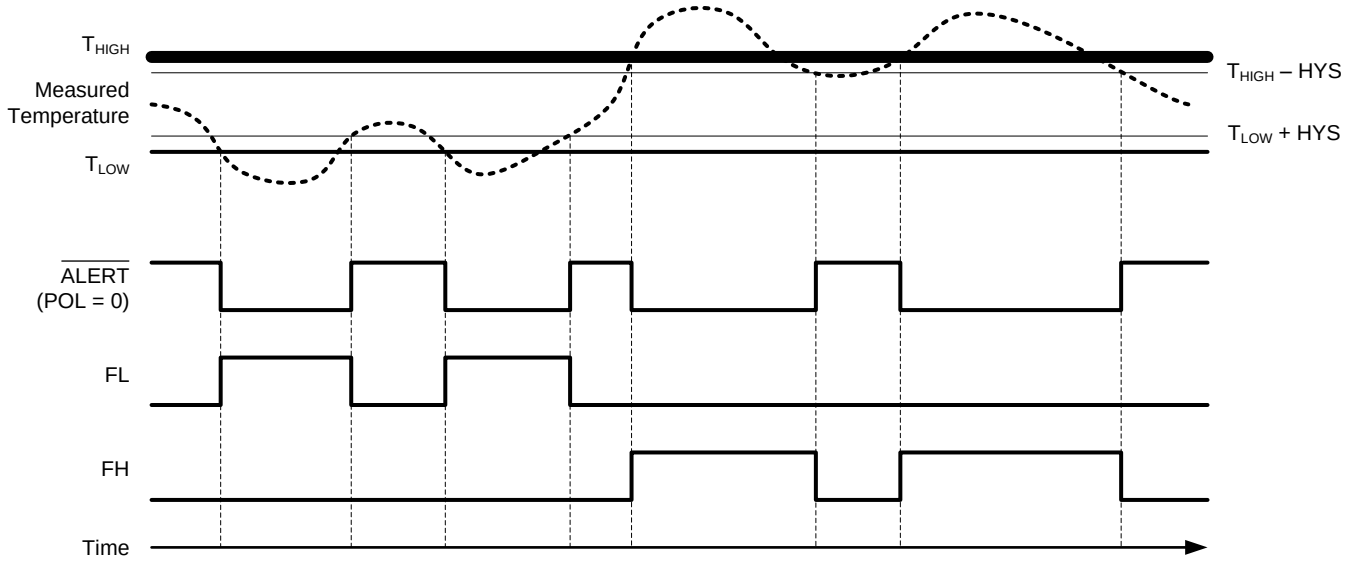

Figure 11. Comparator Mode

SERIAL INTERFACE

The TMP108 operates as a slave device only on the two-wire bus and SMBus. Connections to the bus are made using the open-drain I/O lines, SDA and SCL. The SDA and SCL pins feature integrated spike-suppression filters and Schmitt triggers to minimize the effects of input spikes and bus noise. The TMP108 supports the transmission protocol for both fast (1 kHz to 400 kHz) and high-speed (1 kHz to 3.4 MHz) modes. All data bytes are transmitted MSB first.

SERIAL BUS ADDRESS

To communicate with the TMP108, the master must first communicate with slave devices using a slave address byte. The slave address byte consists of seven address bits, and a direction bit indicating the intent of executing either a read or write operation. The TMP108 features an address pin that allows up to four devices to be addressed on a single bus. The TMP108 latches the status of the address pin at the start of a communication. Table 11 describes the pin logic levels and the corresponding address values. Other values for the fixed address bits are available by request.

Table 11. Address Pin and Slave Addresses

DEVICE TWO-WIRE ADDRESS	A0 PIN CONNECTION
1001000	Ground
1001001	V+
1001010	SDA
1001011	SCL

BUS OVERVIEW

The device that initiates the transfer is called a *master*, and the devices controlled by the master are *slaves*. The bus must be controlled by a master device that generates the serial clock (SCL), controls the bus access, and generates the start and stop conditions.

To address a specific device, initiate a start condition by pulling the data line (SDA) from a high to a low logic level while SCL is high. All slaves on the bus shift in the slave address byte; the last bit indicates whether a read or write operation follows. During the ninth clock pulse, the slave being addressed responds to the master by generating an acknowledge bit and pulling SDA low.

Data transfer is then initiated and sent over eight clock pulses followed by an acknowledge bit. During data transfer, SDA must remain stable while SCL is high because any change in SDA while SCL is high is interpreted as a start or stop signal.

After all data have been transferred, the master generates a stop condition indicated by pulling SDA from low to high, while SCL is high.

WRITING/READING OPERATION

Accessing a particular register on the TMP108 is accomplished by writing the appropriate value to the pointer register. The value for the pointer register is the first byte transferred after the slave address byte with the R/$\overline{W}$ bit low. Every write operation to the TMP108 requires a value for the pointer register (see Figure 13).

When reading from the TMP108, the last value stored in the pointer register by a write operation is used to determine which register is read by a read operation. To change the register pointer for a read operation, a new value must be written to the pointer register. This action is accomplished by issuing a slave address byte with the R/$\overline{W}$ bit low, followed by the pointer register byte. No additional data are required. The master can then generate a start condition and send the slave address byte with the R/$\overline{W}$ bit high to initiate the read command. See Figure 14 for details of this sequence. If repeated reads from the same register are desired, it is not necessary to continually send the pointer register bytes because the TMP108 stores the pointer register value until it is changed by the next write operation.

Note that register bytes are sent with the most significant byte first, followed by the least significant byte.

Copyright © 2013, Texas Instruments Incorporated

SLAVE MODE OPERATIONS

The TMP108 can operate as a slave receiver or slave transmitter.

Slave Receiver Mode:

The first byte transmitted by the master is the slave address, with the R/$\overline{W}$ bit low. The TMP108 then acknowledges reception of a valid address. The next byte transmitted by the master is the pointer register. The TMP108 then acknowledges reception of the pointer register byte. The next byte or bytes are written to the register addressed by the pointer register. The TMP108 acknowledges reception of each data byte. The master can terminate data transfer by generating a start or stop condition.

Slave Transmitter Mode:

The first byte transmitted by the master is the slave address, with the R/$\overline{W}$ bit high. The slave acknowledges reception of a valid slave address. The next byte is transmitted by the slave and is the most significant byte of the register indicated by the pointer register. The master acknowledges reception of the data byte. The next byte transmitted by the slave is the least significant byte. The master acknowledges reception of the data byte. The master can terminate data transfer by generating a not-acknowledge bit on reception of any data byte, or by generating a start or stop condition.

SMBus ALERT FUNCTION

The TMP108 supports the SMBus alert function. When the TMP108 operates in interrupt mode (TM = '1'), the $\overline{\text{ALERT}}$ pin may be connected as an SMBus alert signal. When a master senses that an alert condition is present on the $\overline{\text{ALERT}}$ line, the master sends an SMBus alert command (00011001) to the bus. If the $\overline{\text{ALERT}}$ pin is active, the device acknowledges the SMBus alert command and responds by returning its slave address on the SDA line. The eighth bit (LSB) of the slave address byte indicates whether the alert condition is caused by the temperature exceeding T_{HIGH} or falling below T_{LOW}. The LSB is high if the temperature is greater than T_{HIGH}, or low if the temperature is less than T_{LOW}. See Figure 15 for details of this sequence.

If multiple devices on the bus respond to the SMBus alert command, arbitration during the slave address portion of the SMBus alert command determines which device clears its alert status first. If the TMP108 wins the arbitration, its $\overline{\text{ALERT}}$ pin becomes inactive at the completion of the SMBus alert command. If the TMP108 loses the arbitration, its $\overline{\text{ALERT}}$ pin remains active.

GENERAL CALL

The TMP108 responds to a two-wire general call address (0000000) if the eighth bit is '0'. The device acknowledges the general call address and responds to commands in the second byte. If the second byte is 00000100, the TMP108 latches the status of the address pin, but does not reset. If the second byte is 00000110, the TMP108 internal registers are reset to power-up values. The TMP108 does not support the general address acquire command.

HIGH-SPEED (Hs) MODE

In order for the two-wire bus to operate at frequencies above 400 kHz, the master device must issue an SMBus Hs-mode master code (00001xxx) as the first byte after a start condition to switch the bus to high-speed operation. The TMP108 does not acknowledge this byte, but does switch its input filters on SDA and SCL and its output filters on SDA to operate in Hs-mode, allowing transfers at up to 3.4 MHz. After the Hs-mode master code has been issued, the master transmits a two-wire slave address to initiate a data-transfer operation. The bus continues to operate in Hs-mode until a stop condition occurs on the bus. Upon receiving the stop condition, the TMP108 switches the input and output filters back to fast-mode operation.

TIMEOUT FUNCTION

The TMP108 resets the serial interface if SCL or SDA are held low for 28 ms (typ) between a start and stop condition. If the TMP108 is pulled low, it releases the bus and then waits for a start condition. To avoid activating the timeout function, it is necessary to maintain a communication speed of at least 1 kHz for the SCL operating frequency.

Copyright © 2013, Texas Instruments Incorporated

TIMING DIAGRAMS

The TMP108 is two-wire and SMBus compatible. Figure 12 to Figure 15 describe the various operations on the TMP108. Parameters for Figure 12 are defined in Table 12. Bus definitions are:

Bus Idle: Both SDA and SCL lines remain high.

Start Data Transfer: A change in the state of the SDA line, from high to low, while the SCL line is high defines a start condition. Each data transfer is initiated with a start condition.

Stop Data Transfer: A change in the state of the SDA line from low to high while the SCL line is high defines a stop condition. Each data transfer is terminated with a repeated start or stop condition.

Data Transfer: The number of data bytes transferred between a start and a stop condition is not limited, and is determined by the master device. The receiver acknowledges the transfer of data. It is also possible to use the TMP108 for single-byte updates. To update only the MS byte, terminate communication by issuing a start or stop condition on the bus.

Acknowledge: Each receiving device, when addressed, must generate an acknowledge bit. A device that acknowledges must pull down the SDA line during the acknowledge clock pulse so that the SDA line is stable low during the high period of the acknowledge clock pulse. Setup and hold times must be taken into account. When a master receives data, the termination of the data transfer can be signaled by the master generating a *not-acknowledge* ('1') on the last byte transmitted by the slave.

Table 12. Timing Diagram Definitions

PARAMETER	TEST CONDITIONS	FAST MODE		HIGH-SPEED MODE		UNIT
		MIN	MAX	MIN	MAX	
$f_{(SCL)}$	SCL operating frequency, V+ ≥ 1.8 V	0.001	0.4	0.001	3.4	MHz
	SCL operating frequency, V+ < 1.8 V	0.001	0.4	0.001	2.5	MHz
$t_{(BUF)}$	Bus free time between stop and start conditions, V+ ≥ 1.8 V	1300		160		ns
	Bus free time between stop and start conditions, V+ < 1.8 V	1300		260		ns
$t_{(HDSTA)}$	Hold time after repeated start condition. After this period, the first clock is generated.	600		160		ns
$t_{(SUSTA)}$	Repeated start condition setup time	600		160		ns
$t_{(SUSTO)}$	Stop condition setup time	600		160		ns
$t_{(HDDAT)}$	Data hold time, V+ ≥ 1.8 V	0	900	0	70	ns
	Data hold time, V+ < 1.8 V	0	900	0	130	ns
$t_{(SUDAT)}$	Data setup time, V+ ≥ 1.8 V	100		10		ns
	Data setup time, V+ < 1.8 V	100		50		ns
$t_{(LOW)}$	SCL clock low period, V+ ≥ 1.8 V	1300		160		ns
	SCL clock low period, V+ < 1.8 V	1300		260		ns
$t_{(HIGH)}$	SCL clock high period	600		60		ns
t_R , t_F - SDA	Data rise/fall time		300		80	ns
t_R , t_F - SCL	Clock rise/fall time		300		40	ns
t_R	Clock/data rise time for SCLK ≤ 100 kHz		1000			ns

Copyright © 2013, Texas Instruments Incorporated

TWO-WIRE TIMING DIAGRAMS

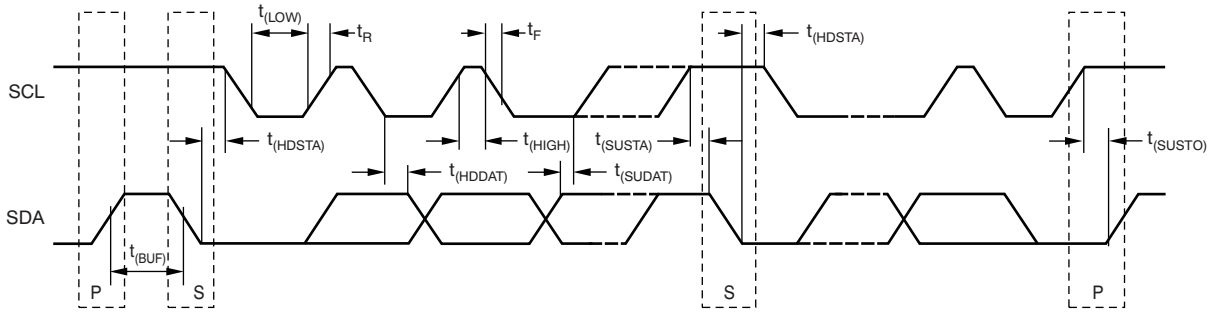

Figure 12. Two-Wire Timing Diagram

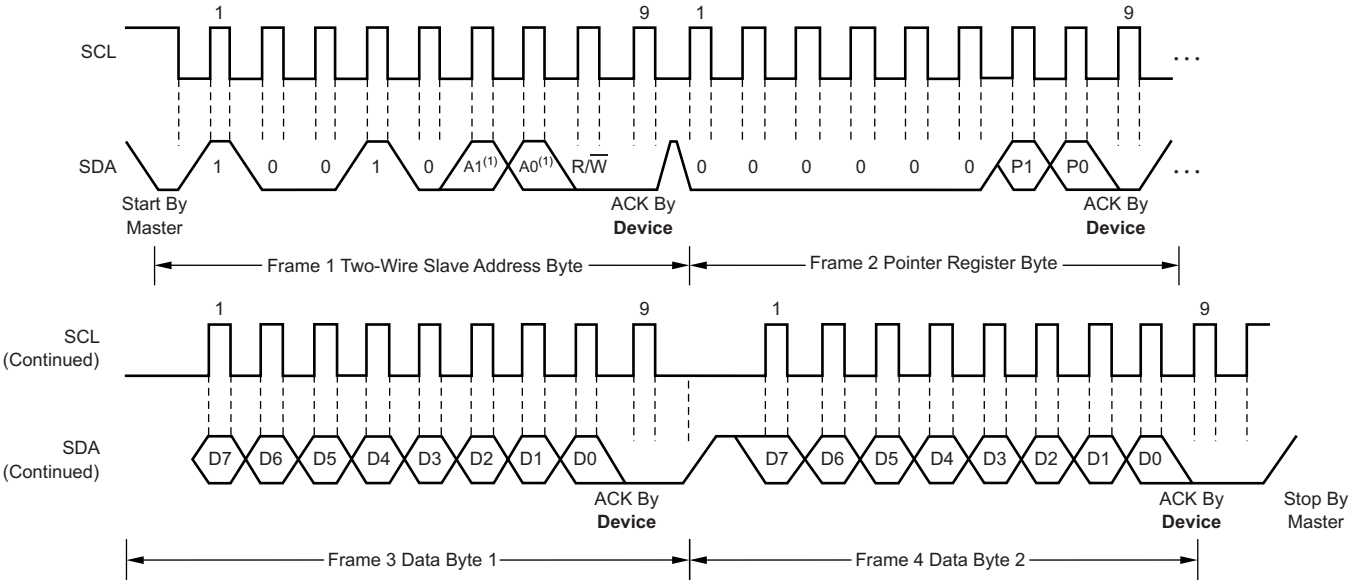

(1) The value of A0 and A1 are determined by the A0 pin.

Figure 13. Two-Wire Timing Diagram for Write Word Format

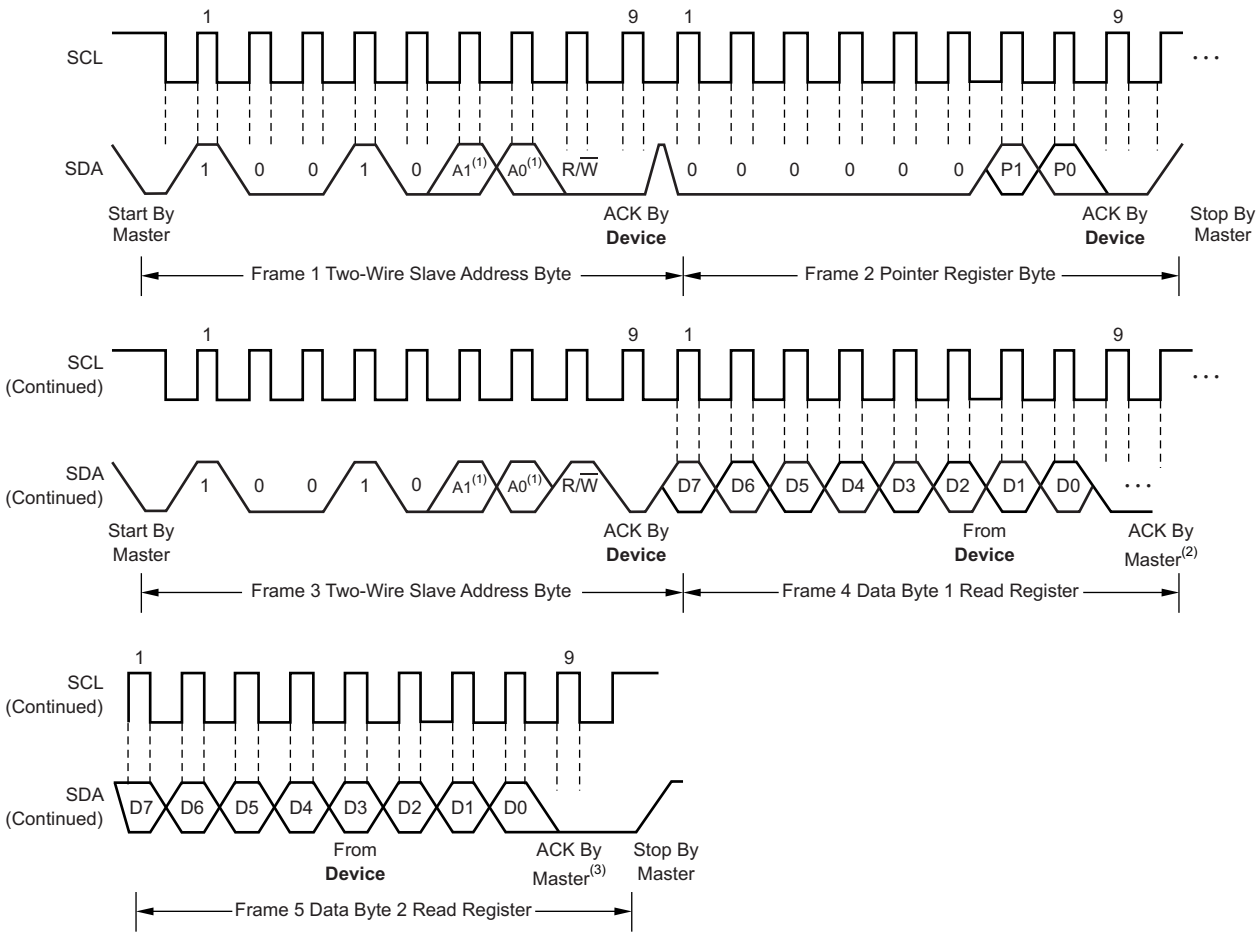

(1) The value of A0 and A1 are determined by the A0 pin.

(2) Master should leave SDA high to terminate a single-byte read operation.

(3) Master should leave SDA high to terminate a two-byte read operation.

Figure 14. Two-Wire Timing Diagram for Read Word Format

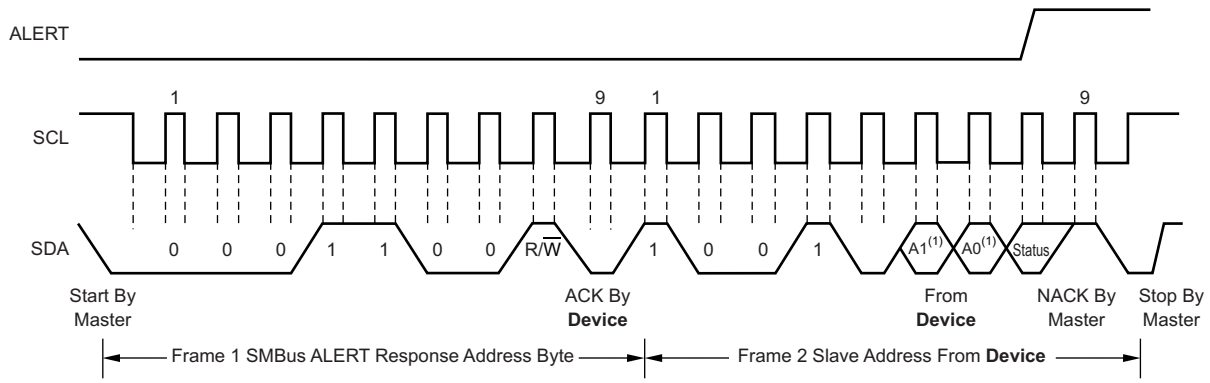

(1) The value of A0 and A1 are determined by the A0 pin.

Figure 15. Timing Diagram for SMBus Alert

Copyright © 2013, Texas Instruments Incorporated

PACKAGING INFORMATION

Orderable Device	Status (1)	Package Type	Package Drawing	Pins	Package Qty	Eco Plan (2)	Lead/Ball Finish	MSL Peak Temp (3)	Op Temp (°C)	Top-Side Markings (4)	Samples
TMP108AIYFFR	ACTIVE	DSBGA	YFF	6	3000	Green (RoHS & no Sb/Br)	SNAGCU	Level-1-260C-UNLIM	-40 to 125	T8	Samples
TMP108AIYFFT	ACTIVE	DSBGA	YFF	6	250	Green (RoHS & no Sb/Br)	SNAGCU	Level-1-260C-UNLIM	-40 to 125	T8	Samples

(1) The marketing status values are defined as follows:
ACTIVE: Product device recommended for new designs.
LIFEBUY: TI has announced that the device will be discontinued, and a lifetime-buy period is in effect.
NRND: Not recommended for new designs. Device is in production to support existing customers, but TI does not recommend using this part in a new design.
PREVIEW: Device has been announced but is not in production. Samples may or may not be available.
OBSOLETE: TI has discontinued the production of the device.

(2) Eco Plan - The planned eco-friendly classification: Pb-Free (RoHS), Pb-Free (RoHS Exempt), or Green (RoHS & no Sb/Br) - please check http://www.ti.com/productcontent for the latest availability information and additional product content details.
TBD: The Pb-Free/Green conversion plan has not been defined.
Pb-Free (RoHS): TI's terms "Lead-Free" or "Pb-Free" mean semiconductor products that are compatible with the current RoHS requirements for all 6 substances, including the requirement that lead not exceed 0.1% by weight in homogeneous materials. Where designed to be soldered at high temperatures, TI Pb-Free products are suitable for use in specified lead-free processes.
Pb-Free (RoHS Exempt): This component has a RoHS exemption for either 1) lead-based flip-chip solder bumps used between the die and package, or 2) lead-based die adhesive used between the die and leadframe. The component is otherwise considered Pb-Free (RoHS compatible) as defined above.
Green (RoHS & no Sb/Br): TI defines "Green" to mean Pb-Free (RoHS compatible), and free of Bromine (Br) and Antimony (Sb) based flame retardants (Br or Sb do not exceed 0.1% by weight in homogeneous material)

(3) MSL, Peak Temp. -- The Moisture Sensitivity Level rating according to the JEDEC industry standard classifications, and peak solder temperature.

(4) Multiple Top-Side Markings will be inside parentheses. Only one Top-Side Marking contained in parentheses and separated by a "~" will appear on a device. If a line is indented then it is a continuation of the previous line and the two combined represent the entire Top-Side Marking for that device.

Important Information and Disclaimer: The information provided on this page represents TI's knowledge and belief as of the date that it is provided. TI bases its knowledge and belief on information provided by third parties, and makes no representation or warranty as to the accuracy of such information. Efforts are underway to better integrate information from third parties. TI has taken and continues to take reasonable steps to provide representative and accurate information but may not have conducted destructive testing or chemical analysis on incoming materials and chemicals. TI and TI suppliers consider certain information to be proprietary, and thus CAS numbers and other limited information may not be available for release.

In no event shall TI's liability arising out of such information exceed the total purchase price of the TI part(s) at issue in this document sold by TI to Customer on an annual basis.

YFF (R-XBGA-N6) DIE-SIZE BALL GRID ARRAY

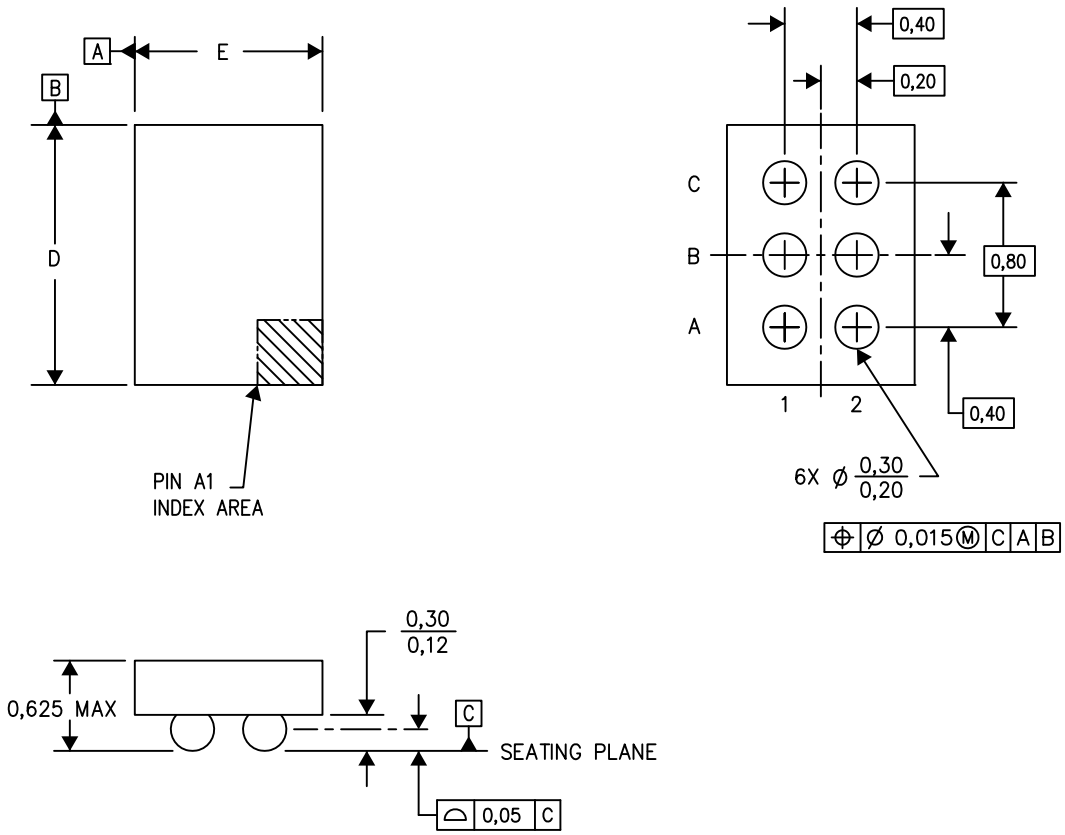

D: Max = 1.216 mm, Min =1.156 mm

E: Max = 0.816 mm, Min =0.756 mm

4207625-4/AL 05/13

NOTES: A. All linear dimensions are in millimeters. Dimensioning and tolerancing per ASME Y14.5M-1994.
B. This drawing is subject to change without notice.
C. NanoFree™ package configuration.

NanoFree is a trademark of Texas Instruments

IMPORTANT NOTICE

Texas Instruments Incorporated and its subsidiaries (TI) reserve the right to make corrections, enhancements, improvements and other changes to its semiconductor products and services per JESD46, latest issue, and to discontinue any product or service per JESD48, latest issue. Buyers should obtain the latest relevant information before placing orders and should verify that such information is current and complete. All semiconductor products (also referred to herein as “components”) are sold subject to TI’s terms and conditions of sale supplied at the time of order acknowledgment.

TI warrants performance of its components to the specifications applicable at the time of sale, in accordance with the warranty in TI’s terms and conditions of sale of semiconductor products. Testing and other quality control techniques are used to the extent TI deems necessary to support this warranty. Except where mandated by applicable law, testing of all parameters of each component is not necessarily performed.

TI assumes no liability for applications assistance or the design of Buyers’ products. Buyers are responsible for their products and applications using TI components. To minimize the risks associated with Buyers’ products and applications, Buyers should provide adequate design and operating safeguards.

TI does not warrant or represent that any license, either express or implied, is granted under any patent right, copyright, mask work right, or other intellectual property right relating to any combination, machine, or process in which TI components or services are used. Information published by TI regarding third-party products or services does not constitute a license to use such products or services or a warranty or endorsement thereof. Use of such information may require a license from a third party under the patents or other intellectual property of the third party, or a license from TI under the patents or other intellectual property of TI.

Reproduction of significant portions of TI information in TI data books or data sheets is permissible only if reproduction is without alteration and is accompanied by all associated warranties, conditions, limitations, and notices. TI is not responsible or liable for such altered documentation. Information of third parties may be subject to additional restrictions.

Resale of TI components or services with statements different from or beyond the parameters stated by TI for that component or service voids all express and any implied warranties for the associated TI component or service and is an unfair and deceptive business practice. TI is not responsible or liable for any such statements.

Buyer acknowledges and agrees that it is solely responsible for compliance with all legal, regulatory and safety-related requirements concerning its products, and any use of TI components in its applications, notwithstanding any applications-related information or support that may be provided by TI. Buyer represents and agrees that it has all the necessary expertise to create and implement safeguards which anticipate dangerous consequences of failures, monitor failures and their consequences, lessen the likelihood of failures that might cause harm and take appropriate remedial actions. Buyer will fully indemnify TI and its representatives against any damages arising out of the use of any TI components in safety-critical applications.

In some cases, TI components may be promoted specifically to facilitate safety-related applications. With such components, TI’s goal is to help enable customers to design and create their own end-product solutions that meet applicable functional safety standards and requirements. Nonetheless, such components are subject to these terms.

No TI components are authorized for use in FDA Class III (or similar life-critical medical equipment) unless authorized officers of the parties have executed a special agreement specifically governing such use.

Only those TI components which TI has specifically designated as military grade or “enhanced plastic” are designed and intended for use in military/aerospace applications or environments. Buyer acknowledges and agrees that any military or aerospace use of TI components which have ***not*** been so designated is solely at the Buyer's risk, and that Buyer is solely responsible for compliance with all legal and regulatory requirements in connection with such use.

TI has specifically designated certain components as meeting ISO/TS16949 requirements, mainly for automotive use. In any case of use of non-designated products, TI will not be responsible for any failure to meet ISO/TS16949.

Products		**Applications**	
Audio	www.ti.com/audio	Automotive and Transportation	www.ti.com/automotive
Amplifiers	amplifier.ti.com	Communications and Telecom	www.ti.com/communications
Data Converters	dataconverter.ti.com	Computers and Peripherals	www.ti.com/computers
DLP® Products	www.dlp.com	Consumer Electronics	www.ti.com/consumer-apps
DSP	dsp.ti.com	Energy and Lighting	www.ti.com/energy
Clocks and Timers	www.ti.com/clocks	Industrial	www.ti.com/industrial
Interface	interface.ti.com	Medical	www.ti.com/medical
Logic	logic.ti.com	Security	www.ti.com/security
Power Mgmt	power.ti.com	Space, Avionics and Defense	www.ti.com/space-avionics-defense
Microcontrollers	microcontroller.ti.com	Video and Imaging	www.ti.com/video
RFID	www.ti-rfid.com		
OMAP Applications Processors	www.ti.com/omap	**TI E2E Community**	e2e.ti.com
Wireless Connectivity	www.ti.com/wirelessconnectivity		

Mailing Address: Texas Instruments, Post Office Box 655303, Dallas, Texas 75265
Copyright © 2013, Texas Instruments Incorporated