This document is the Property of datasol(B) pvt ltd. Bangalore, India. Reproduction, Utilisation or Disclosure to third parties, in any form what soever is not allowed without written consent of the proprietors.

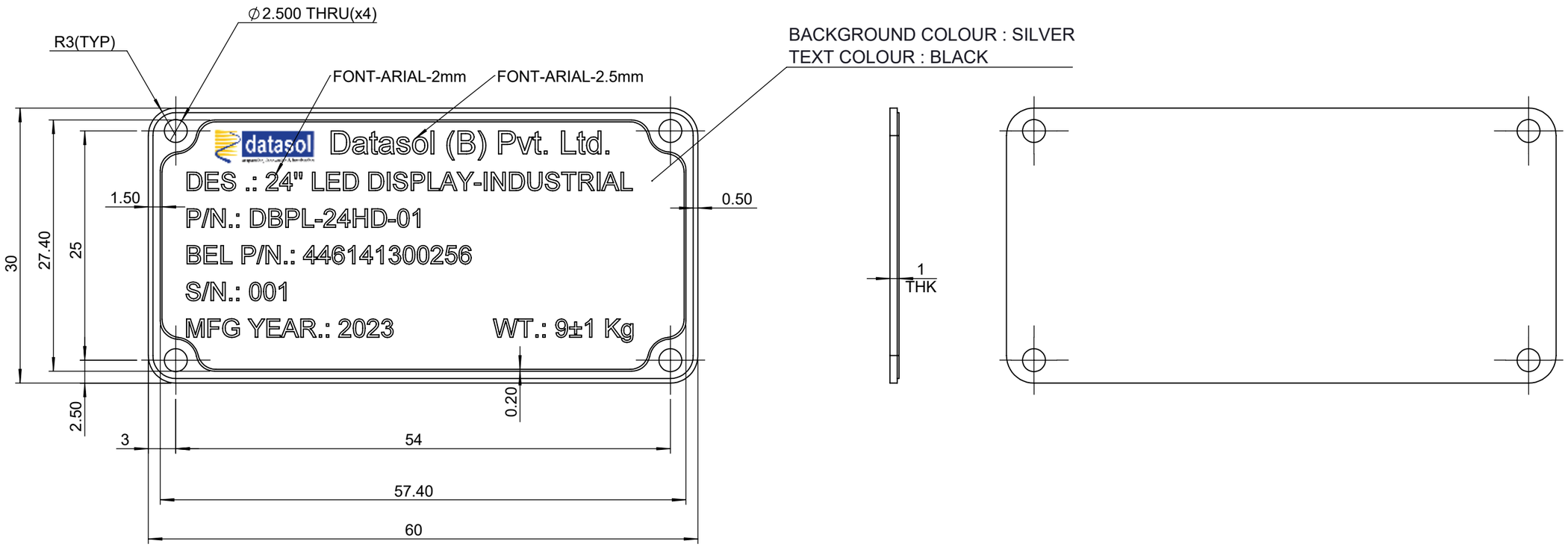

SPECIFICATIONS :
1.PRINTING PROCESS : METAL PHOTO PRINTING
2.LABEL SIZE - 60mm WIDE X 30mm HEIGHT
3.MATERIAL : ALUMINIUM
4. PROTECTIVE TRANSPARENT FILM - TO BE STUCK ON LABEL TO PREVENT FROM SCRATCHES
5.THICKNESS : 1mm
6.BORDER COLOUR : BLACK
7.TEXT FONT : BOLD
8.SL No. STARTS FROM 001

ENGINEERING CHANGE NOTE			FINISH :		NAME	SIGN	DATE	TOLERANCE IS: 2102-1993 GRADE MEDIUM	
DATE	REV NO	ECN NO.		DRAWN	BHIMS				
				CHECKED	BHIMS			Permissible deviation for basic size range(mm)	
				APPROVED	PRB			over 400-1000	±0.8
PROJECT : DBPL-24HD-01			PROJECTION OF FIRST ANGLE	COMPT Wt :		ALL DIMENSIONS ARE IN mm UNLESS OTHERWISE STATED		over 120-400	±0.5
CUSTOMER : BEL,GAD				SCALE :	2:1			over 30-120	±0.3
TITLE : NAME PLATE				QTY :	01			over 6-30	±0.2
				REL. DATE : 31/07/2023		REV NO: 00		over 3-6	±0.1
								0.5-3	±0.1
MATERIAL : SEE NOTE				DATASOL (B) PVT LTD BENGALURU		DRAWING NO : DBPL-24HD-PD-06		SHEET SIZE : A3	
								SHEET NO : 1 OF 1	