This document is the Property of datasol(B) pvt ltd. Bangalore, India. Reproduction, Utilisation or Disclosure to third parties, in any form what soever is not allowed without written consent of the proprietors.

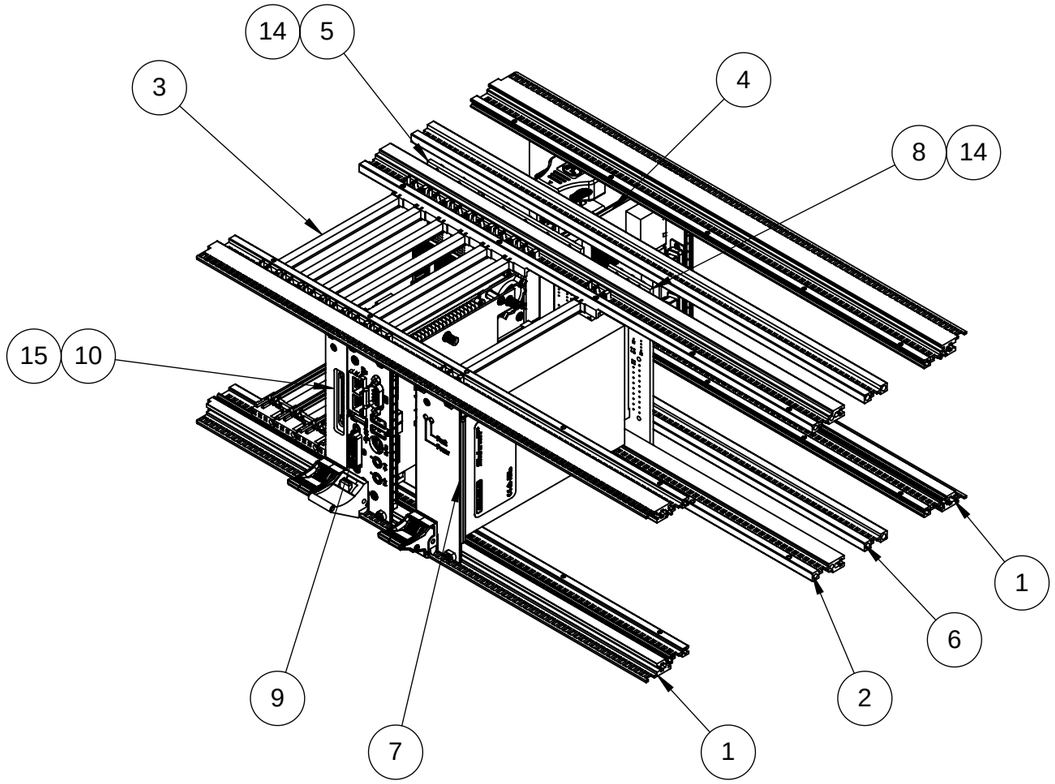

ITEM NO.	DRAWING No./PART No.	DESCRIPTION	QTY.
1	66-678-23	STANDARD EXTRUSION	4
2	66-144-23	STANDARD EXTRUSION	2
3	61-950-01	CARD GUIDE	14
4	cPCI-R3P00	8 HP Rear I/O module for cPCI-3970	1
5	cBP-3206	6 slots cPCI Backplane	1
6	66-138-23	STANDARD EXTRUSION	2
7	cPS-H325/AC	cPCI Power Supply	1
8	cBP-3061	cPCI power supply Backplane	1
9	cPCI-3510BLD/5700E/M8	PROCESSOR MODULE	1
10	80207-0	3U compact PCI carrier card for XMC PCI Express modules	1
11	DBPL-ACPCI-PD-14	ASL DVI-DB CABLE FIXING PLATE	1
12	DBPL-DVI-MF-01	DVI MALE TO FEMALE	2
13	DVI2DP2	DVI TO DP CONVERTER	1
14	1250434	M2.5x8 PAN HEAD (PHILIPS HEAD)	29
15	X3N1050TI-LFAB-DVI-B	NVIDIA GTX1050TI XMC	1

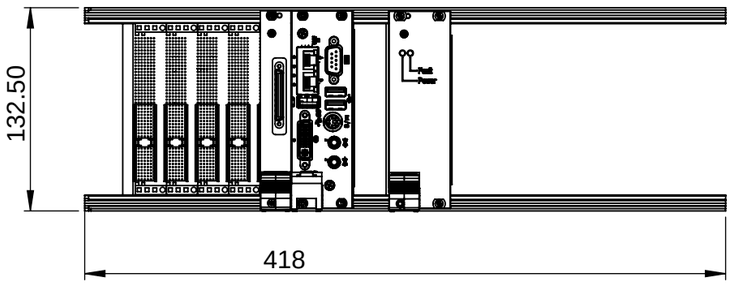

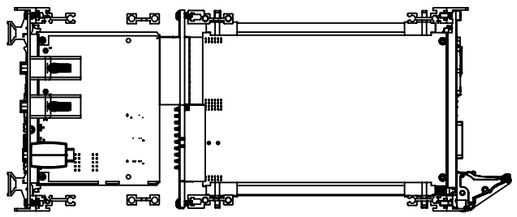

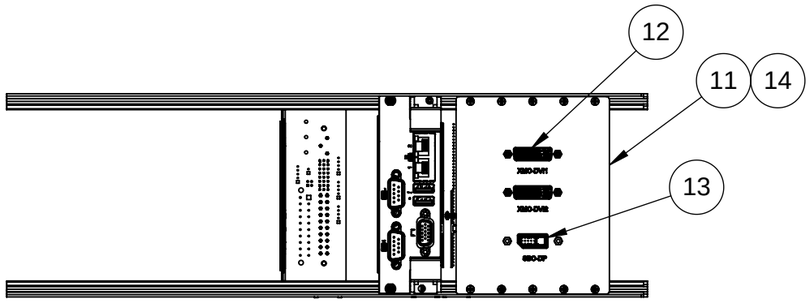

ENGINEERING CHANGE NOTE		
DATE	REV NO	ECN NO.

FINISH :

	NAME	SIGN	DATE
DRAWN	MANI		
CHECKED	BHIMS		
APPROVED	PRB		

TOLERANCE IS: 2102-1993 GRADE MEDIUM

Permissible deviation for basic size range(mm)	
over 400-1000	±0.8
over 120-400	±0.5
over 30-120	±0.3
over 6-30	±0.2
over 3-6	±0.1
0.5-3	±0.1

PROJECT : DBPL-CPCI-ALC-21-00

CUSTOMER : ASL,HYD

TITLE : cPCI BASED ADVANCED LAUNCH COMPUTER CARD CAGE ASSY

MATERIAL : ----------

PROJECTION OF FIRST ANGLE

COMPT Wt :

SCALE : 1:4

QTY : ---

REL. DATE : 04/10/2021

ALL DIMENSIONS ARE IN mm UNLESS OTHERWISE STATED

REV NO: 00

datasol Inspiration, Innovation & Incubation

DATASOL (B) PVT LTD

BENGALURU

DRAWING NO : DBPL-ACPCI-GA-03

SHEET SIZE : A3

SHEET NO : 1 OF 1