This document is the Property of datasol (B) pvt ltd. Bangalore, India. Reproduction, Utilisation or Disclosure to third parties, in any form what soever is not allowed without written consent of the proprietors.

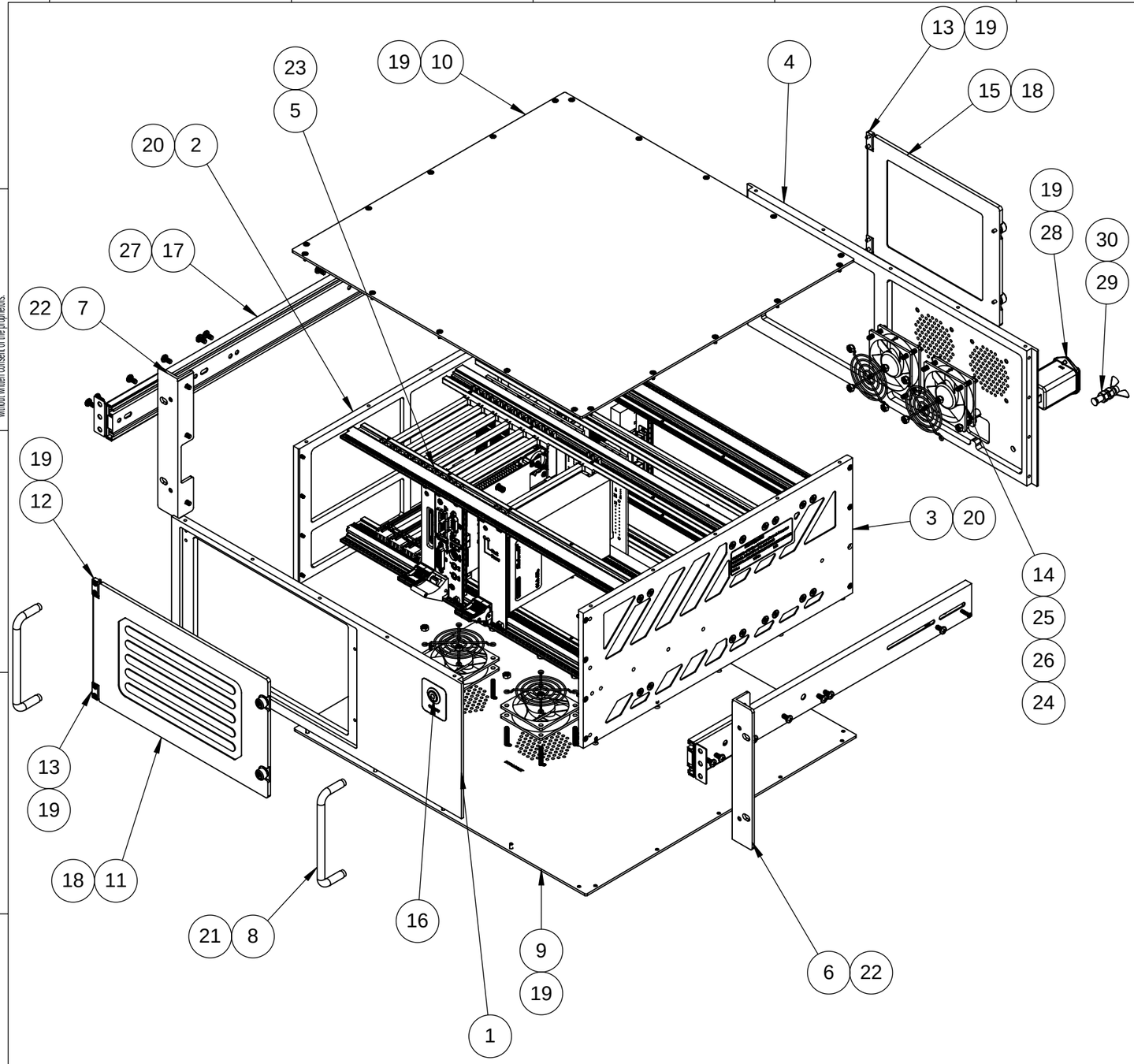

ITEM NO.	DRAWING No./PART No.	DESCRIPTION	QTY.
1	DBPL-ACPCI-PD-03	FRONT PLATE FOR ASL CPCI	1
2	DBPL-ACPCI-PD-04	LHS PLATE FORASL CPCI	1
3	DBPL-ACPCI-PD-05	RHS PLATE FOR ASL CPCI	1
4	DBPL-ACPCI-PD-09	REAR PLATE FOR ASL CPCI	1
5	DBPL-ACPCI-GA-03	cPCI BASED ADVANCED LAUNCH COMPUTER CARD CAGE ASSY	1
6	DBPL-ACPCI-PD-07	RHS FLANGE FOR ASL CPCI	1
7	DBPL-ACPCI-PD-06	LHS FLANGE FOR ASL CPCI	1
8	DBPL-ACPCI-PD-11	HANDLE P115xM4	2
9	DBPL-ACPCI-PD-01	BOTTOM PLATE FOR ASL CPCI	1
10	DBPL-ACPCI-PD-08	TOP PLATE FOR ASL CPCI	1
11	DBPL-ACPCI-PD-02	DOOR FOR ASL CPCI	1
12	DBPL-ACPCI-PD-12	HINGE1 FOR ASL CPCI	2
13	DBPL-ACPCI-PD-13	HINGE2 FOR ASL CPCI	2
14	MF60151V3-1000U-A99	FAN 60X60	4
15	DBPL-ACPCI-PD-10	REAR DOOR FOR ASL CPCI	1
16	MP0045	ON/OFF SWITCH	1
17	2907-16	ACCURIDE SLIDE	2
18	47-92-121-20	M3 CAPTIVE SCREW	4
19	1250744	M3x8 CSK SCREW (PHILIPS HEAD)	50
20	1250760	M3x12 CSK SCREW (PHILIPS HEAD)	16
21	1250809	M4X12 PHILIPS CSK SCREW	4
22	1250787	M4x8 CSK SCREW (PHILIPS HEAD)	6
23	1250795	M4x10 CSK SCREW (PHILIPS HEAD)	32
24	STD	FAN FINGER GUARD 60x60	4
25	1075632	M4x25 PHILIPS CSK SCREW	16
26	1241478	M4 HEX NUT	16
27	1250558	M4x8 PAN HEAD (PHILIPS HEAD)	14
28	FN9266B-6-06	AC Power Entry Modules	1
29	1241494	M6 HEX NUT	2
30	1099183	M6 WING NUT	1

ENGINEERING CHANGE NOTE		
DATE	REV NO	ECN NO.

FINISH :

	NAME	SIGN	DATE
DRAWN	MANI		
CHECKED	BHIMS		
APPROVED	PRB		

TOLERANCE
IS: 2102-1993
GRADE MEDIUM

Permissible deviation for basic size range(mm)	
over 400-1000	±0.8
over 120-400	±0.5
over 30-120	±0.3
over 6-30	±0.2
over 3-6	±0.1
0.5-3	±0.1

PROJECT : DBPL-CPCI-ALC-21-00

CUSTOMER : ASL, HYD

TITLE :
cPCI BASED ADVANCED LAUNCH COMPUTER ENCLOSURE EXLODED VIEW

MATERIAL :

PROJECTION OF FIRST ANGLE

COMPT Wt :
SCALE : NTS
QTY : ---
REL. DATE : 04/10/2021

ALL DIMENSIONS ARE IN mm UNLESS OTHERWISE STATED

REV NO: 00

datasol
Inspiration, Innovation & Incubation

DATASOL (B) PVT LTD
BENGALURU

DRAWING NO :
DBPL-ACPCI-GA-02

SHEET SIZE : A3

SHEET NO : 1 OF 1