This document is the Property of datasol(B) pvt ltd. Bangalore, India. Reproduction, Utilisation or Disclosure to third parties, in any form what soever is not allowed without written consent of the proprietors.

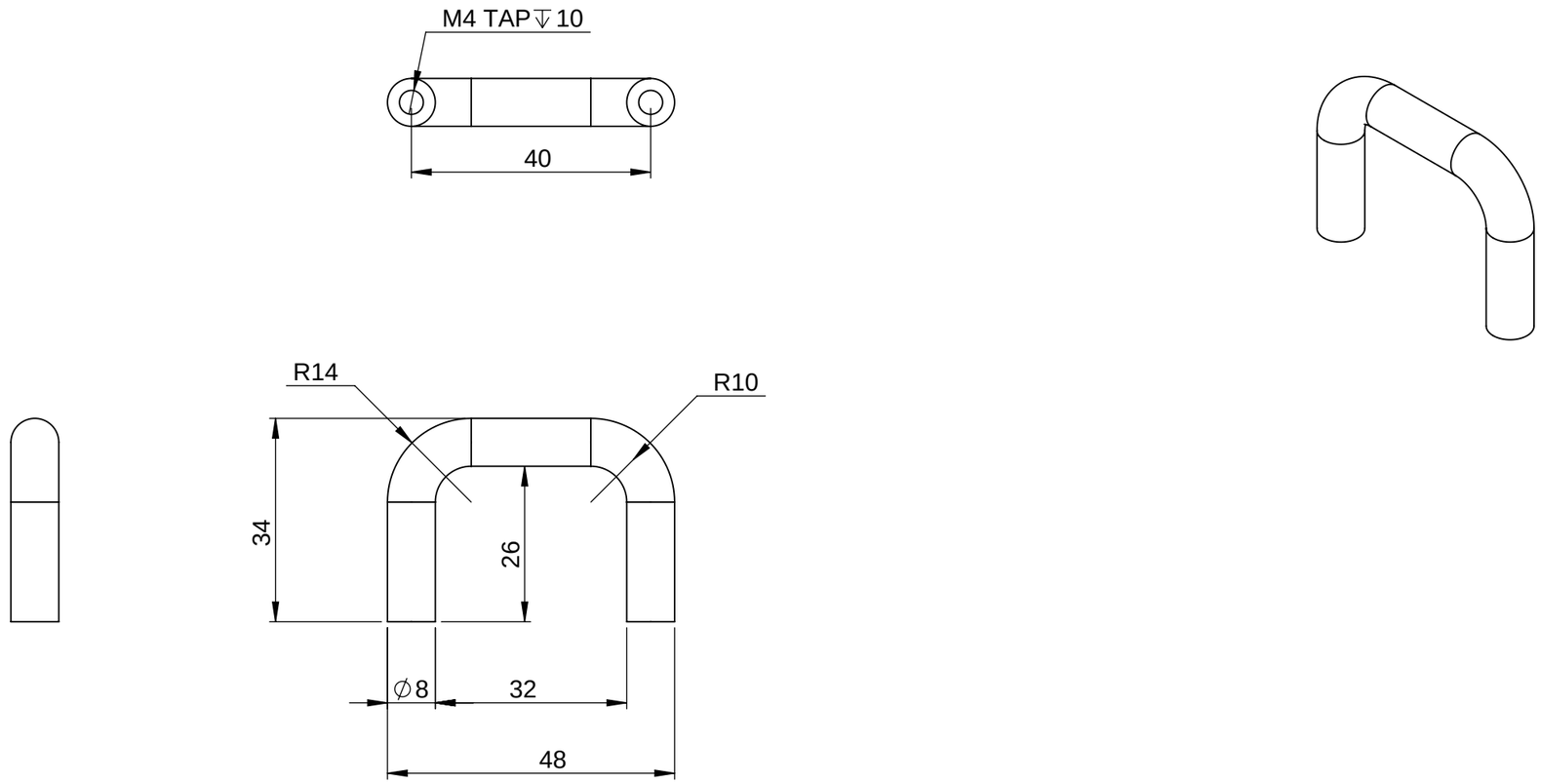

ENGINEERING CHANGE NOTE		
DATE	REV NO	ECN NO.

FINISH :

	NAME	SIGN	DATE
DRAWN	MANI		
CHECKED	BHIMS		
APPROVED	PRB		

TOLERANCE
IS: 2102-1993
GRADE MEDIUM

Permissible deviation for basic size range(mm)	
over 400-1000	±0.8
over 120-400	±0.5
over 30-120	±0.3
over 6-30	±0.2
over 3-6	±0.1
0.5-3	±0.1

PROJECT : DSL-RKVM18-97TP-AC

CUSTOMER : ASL,HYD

TITLE :
HANDEL P40XM4

MATERIAL :
SS 304

PROJECTION OF FIRST ANGLE

COMPT Wt :

SCALE : 1:1

QTY : 02

REL. DATE : 23/09/2021

ALL DIMENSIONS ARE IN mm UNLESS OTHERWISE STATED

REV NO: 00

DATASOL (B) PVT LTD
BENGALURU

DRAWING NO :
DBPL-ARKVM-PD-06

SHEET SIZE : A3

SHEET NO : 1 OF 2

This document is the Property of datasol(B) pvt ltd. Bangalore, India. Reproduction, Utilisation or Disclosure to third parties, in any form what soever is not allowed without written consent of the proprietors.

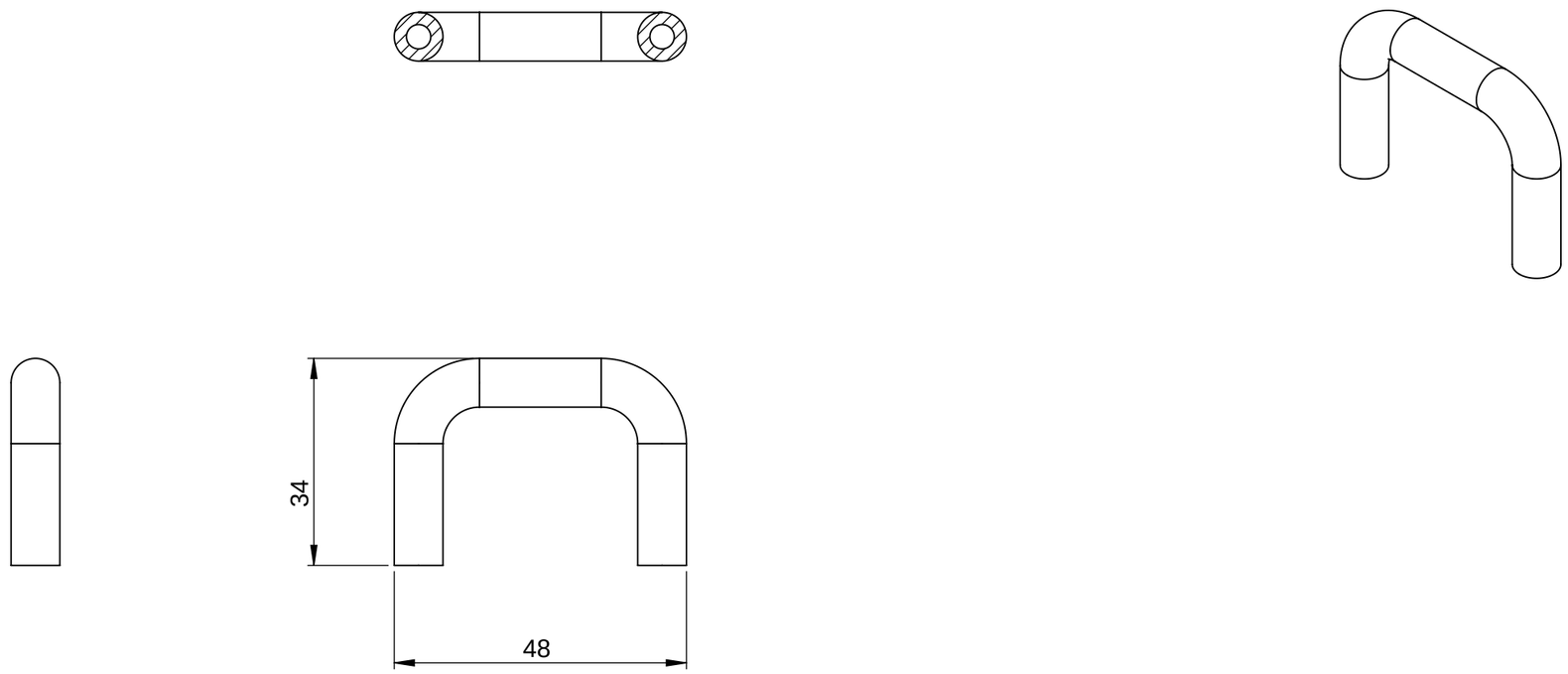

NOTE:
1) ALL THE SURFACES OF THE PARTS ARE SUBJECTED TO PASSIVATION AS PER ASTM A967
2) PAINT THE UNMASKED SURFACES WITH BLACK
3) ALL HOLES TO BE MASKED BEFORE PAINTING

ENGINEERING CHANGE NOTE		
DATE	REV NO	ECN NO.

FINISH :

	NAME	SIGN	DATE
DRAWN	MANI		
CHECKED	BHIMS		
APPROVED	PRB		

TOLERANCE
IS: 2102-1993
GRADE MEDIUM

Permissible deviation for basic size range(mm)	
over 400-1000	±0.8
over 120-400	±0.5
over 30-120	±0.3
over 6-30	±0.2
over 3-6	±0.1
0.5-3	±0.1

PROJECT : DSL-RKVM18-97TP-AC

CUSTOMER : ASL,HYD

TITLE : HANDEL P40XM4

MATERIAL : SS 304

PROJECTION OF FIRST ANGLE

COMPT Wt :

SCALE : 1:1

QTY : 02

REL. DATE : 23/09/2021

ALL DIMENSIONS ARE IN mm UNLESS OTHERWISE STATED

REV NO: 00

DATASOL (B) PVT LTD
BENGALURU

DRAWING NO : DBPL-ARKVM-PD-06

SHEET SIZE : A3

SHEET NO : 2 OF 2