This document is the Property of datasol(B) pvt ltd. Bangalore, India. Reproduction, Utilisation or Disclosure to third parties, in any form what soever is not allowed without written consent of the proprietors.

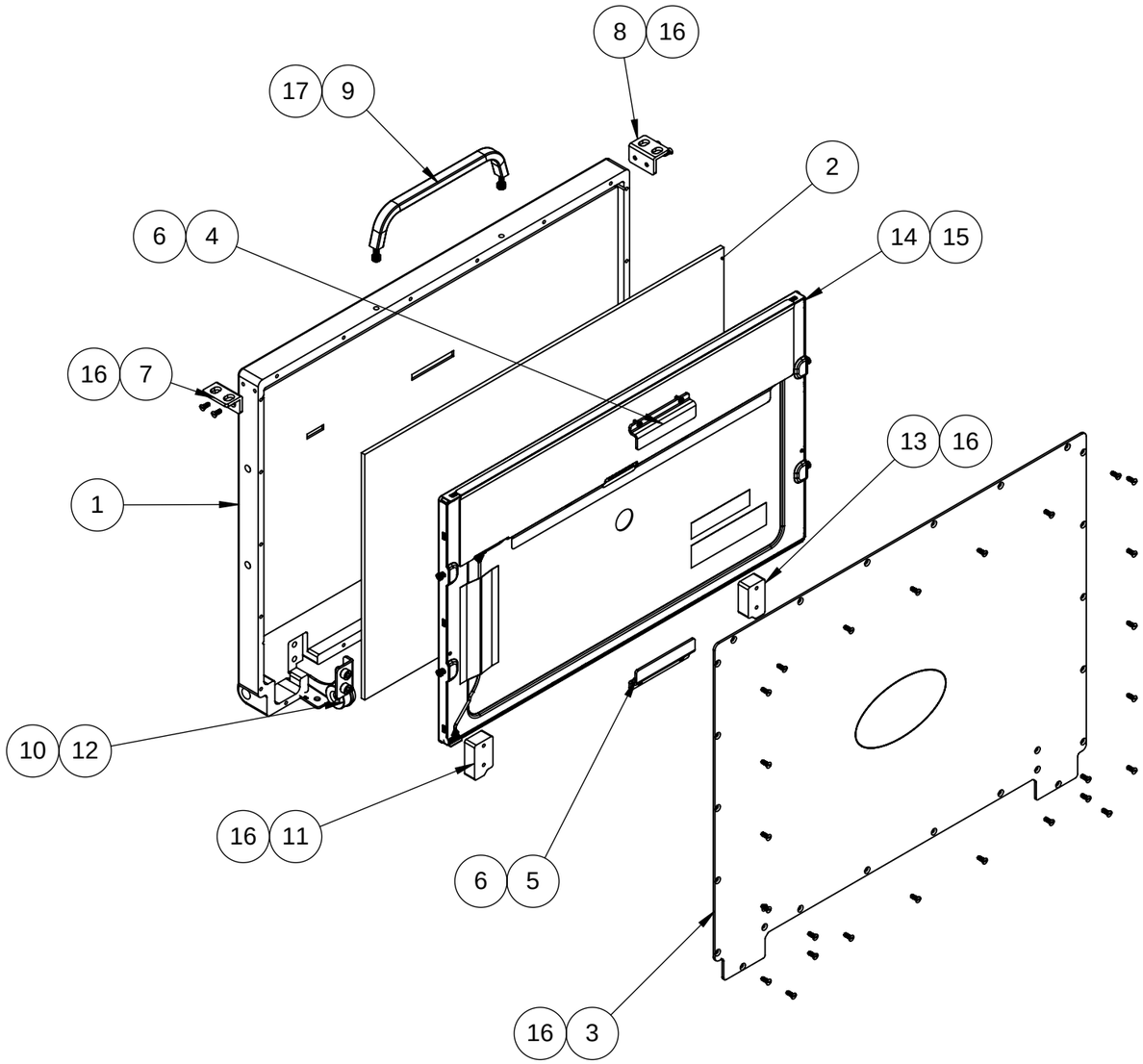

ITEM NO.	DRAWING No./PART No.	DESCRIPTION	QTY.
1	DBPL-ARKVM-PD-02	ASL RKVM DISPLAY BEZEL	1
2	DBPL-ARKVM-PD-15	LCD PROTECTIVE GLASS	1
3	DBPL-ARKVM-PD-04	DISPLAY COVER FOR ASL RKVM	1
4	DBPL-ARKVM-PD-10	DISPLAY SUPPORT CLAMP	1
5	DBPL-ARKVM-PD-11	DISPLAY SUPPORT CLAMP2	1
6	1073028	M2.5x6 SLOTTED PAN HEAD SCREW	4
7	DBPL-ARKVM-PD-08	DISPLAY RHS SIDE FLANGE	1
8	DBPL-ARKVM-PD-09	DISPLAY LHS SIDE FLANGE	1
9	DBPL-ARKVM-PD-07	LIFTING HANDLE	1
10	1233262	M5x8 SCOKET HEAD SCREW	4
11	DBPL-ARKVM-PD-12	HINGE SCREW CLOSING BLOCK	1
12	HG-TA45HR	TORQUE HINGE	2
13	DBPL-ARKVM-PD-13	HINGE SCREW CLOSING BLOCK2	1
14	G185HAN01.0	18.5òColor TFT-LCD	1
15	1233106	M3x6 SOCKET HEAD SCREW	4
16	1246739	M3x8 SLOTTED HEAD CSK SCREW	30
17	1111353	M4x14 SOCKET HEAD SCREW	2

ENGINEERING CHANGE NOTE		
DATE	REV NO	ECN NO.

FINISH :

	NAME	SIGN	DATE
DRAWN	MANI		
CHECKED	BHIMS		
APPROVED	PRB		

TOLERANCE
IS: 2102-1993
GRADE MEDIUM

Permissible deviation for basic size range(mm)	
over 400-1000	±0.8
over 120-400	±0.5
over 30-120	±0.3
over 6-30	±0.2
over 3-6	±0.1
0.5-3	±0.1

PROJECT : DSL-RKVM18-97TP-AC

CUSTOMER : ASL, HYD

TITLE :
ASL RKVM DISPLAY EXPLODED VIEW

MATERIAL :

PROJECTION OF FIRST ANGLE

COMPT Wt :
SCALE : NTS
QTY : ---
REL. DATE : 23/09/2021

ALL DIMENSIONS ARE IN mm UNLESS OTHERWISE STATED

REV NO: 00

DATASOL (B) PVT LTD
BENGALURU

DRAWING NO :
DBPL-ARKVM-GA-02

SHEET SIZE : A3

SHEET NO : 1 OF 1