This document is the Property of datasol (B) pvt ltd. Bangalore, India. Reproduction, Utilisation or Disclosure to third parties, in any form what soever is not allowed without written consent of the proprietors.

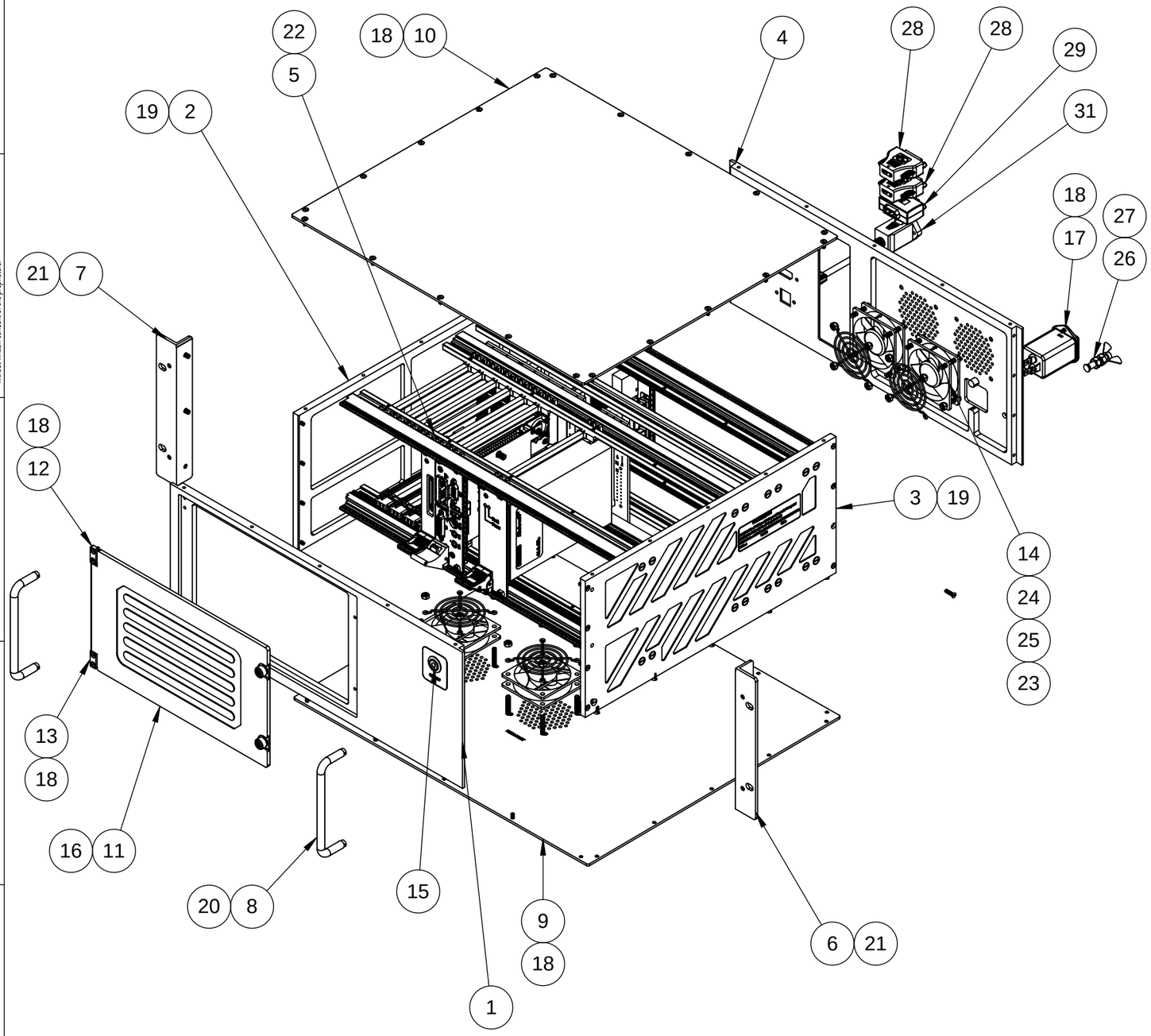

ITEM NO.	DRAWING No./PART No.	DESCRIPTION	Default/QTY.
1	DBPL-ACPCI-PD-03	FRONT PLATE FOR ASL CPCI	1
2	DBPL-ACPCI-PD-04	LHS PLATE FORASL CPCI	1
3	DBPL-ACPCI-PD-05	RHS PLATE FOR ASL CPCI	1
4	DBPL-ACPCI-PD-09	REAR PLATE FOR ASL CPCI	1
5	DBPL-ACPCI-GA-03	cPCI BASED ADVANCED LAUNCH COMPUTER CARD CAGE ASSY	1
6	DBPL-ACPCI-PD-07	RHS FLANGE FOR ASL CPCI	1
7	DBPL-ACPCI-PD-06	LHS FLANGE FOR ASL CPCI	1
8	DBPL-ACPCI-PD-10	HANDLE P115xM4	2
9	DBPL-ACPCI-PD-01	BOTTOM PLATE FOR ASL CPCI	1
10	DBPL-ACPCI-PD-08	TOP PLATE FOR ASL CPCI	1
11	DBPL-ACPCI-PD-02	DOOR FOR ASL CPCI	1
12	DBPL-ACPCI-PD-11	HINGE1 FOR ASL CPCI	1
13	DBPL-ACPCI-PD-12	HINGE2 FOR ASL CPCI	1
14	MF60151V3-1000U-A99	FAN 60X60	4
15	MP0045	ON/OFF SWITCH	1
16	47-92-121-20	M3 CAPTIVE SCREW	2
17	FN9266B-6-06	AC Power Entry Modules	1
18	1246739	M3x8 SLOTTED HEAD CSK SCREW	46
19	1246755	M3x12 SLOTTED HEAD CSK SCREW	16
20	1246836	M4x12 SLOTTED HEAD CSK SCREW	4
21	1246801	M4x8 SLOTTED HEAD CSK SCREW	6
22	1246828	M4x10 SLOTTED HEAD CSK SCREW	32
23	FG-6	FAN FINGER GUARD 60x60	4
24	1246879	M4x25 SLOTTED HEAD CSK SCREW	16
25	1241478	M4 HEX NUT	16
26	1241494	M6 HEX NUT	2
27	1099183	M6 WING NUT	1
28	DBPL-DVI-MF-01	DVI MALE TO FEMALE	2
29	DVI2DP2	DVI TO DP CONVERTER	1
31	1771-03S	CAT-6 Panel-Mount Ext Shielded	1

ENGINEERING CHANGE NOTE		
DATE	REV NO	ECN NO.

FINISH :

	NAME	SIGN	DATE
DRAWN	MANI		
CHECKED	BHIMS		
APPROVED	PRB		
COMPT Wt :			
SCALE :	NTS		
QTY :	---		
REL. DATE : 04/10/2021		REV NO: 00	

TOLERANCE
IS: 2102-1993
GRADE MEDIUM

Permissible deviation for basic size range(mm)	
over 400-1000	±0.8
over 120-400	±0.5
over 30-120	±0.3
over 6-30	±0.2
over 3-6	±0.1
0.5-3	±0.1

ALL DIMENSIONS ARE IN mm UNLESS OTHERWISE STATED

PROJECT : DBPL-CPCI-ALC-21-00

CUSTOMER : ASL, HYD

TITLE :
cPCI BASED ADVANCED LAUNCH COMPUTER ENCLOSURE EXLODED VIEW

MATERIAL :

PROJECTION OF FIRST ANGLE

DATASOL (B) PVT LTD
BENGALURU

DRAWING NO :
DBPL-ACPCI-GA-02

SHEET SIZE : A3

SHEET NO : 1 OF 1