DE G531 PRODUCT DESIGN

FIRST SEMESTER 2023 – 24

TEAM – 8

MULTI-COMPARTMENT MECHANICAL BLENDER

BY

PUSHKARAJ VINAY AMBALGI (2020A4PS1985G)

SHARDUL MOHIRE (2022H1410066G)

EQUAL CONTRIBUTION BY BOTH TEAM MEMBERS

SUPERVISOR

Dr . G.M BAPAT

INDEX

Sr. No.	TITLE
1	PROBLEM DEFINITION A) INTRODUCTION B) PROBLEM IDENTIFICATION C) MISSION STATEMENT
2	INFORMATION GATHERING
3	FUNCTION STRUCTURE ANALYSIS A) FAST DIAGRAM B) GENERALIZED BLACK BOX C) EXPANDED BLACK BOX D) ACTIVITY DIAGRAM
4	CONCEPT GENERATION A) GENERATED CONCEPTS B) CAD MODELS C) CRITERIA FOR SELECTION D) PUGH CHART E) WEIGHTED DECISION MATRIX
5	PROTOTYPING
6	DESIGN FOR MANUFACTURABILITY AND ASSEMBLY (DFMA):
7	DESIGN FOR ENVIRONMENT (DFE):
8	HUMAN FACTORS
9	TIMELINE
10	FINAL DESIGN AND PROTOTYPE

PROBLEM DEFINITION

INTRODUCTION

Design and develop a multi-compartment mechanical blender with a wind-up mechanism, enhancing the blending experience by offering unparalleled convenience, portability, and versatility. This product aims to provide users with a novel way to mix various ingredients while on the go. It offers customizable and hassle-free blending options through its integrated storage compartments and mechanical wind-up drive system.

PROBLEM IDENTIFICATION

In the landscape of culinary advancements, the Multi-Compartment Mechanical Blender emerges as a response to the urgent demand for convenience in our fast-paced lives and the increasing inclination towards personalized dietary preferences. With a rising focus on freshness, customization, and dietary autonomy, this blender empowers users to craft beverages aligned with their specific tastes, fostering satisfaction and a feeling of control over dietary choices. The additional advantages of simplified cleanup processes and heightened efficiency further contribute to its allure. Recognizing the varied needs of target customers is crucial for success. This blender becomes a go-to for fitness enthusiasts seeking high-protein, low-calorie options, and busy professionals appreciate its convenience for quick, ready-to-eat meals. Students benefit from its cost-effectiveness and swift refreshment capabilities, while travelers value its portability and nutritious offerings. For parents, it offers family-friendly and nourishing choices, catering to the tastes and nutritional requirements of both children and infants. Lastly, the elderly value the blender's ability to provide easily digestible, nutrient-rich foods that align with their health considerations. By comprehending and addressing the unique needs of these customer groups, businesses can ensure their products seamlessly integrate with the diverse lifestyles and preferences of their target markets.

MISSION STATEMENT

"Revolutionize meal preparation by blending convenience through portable, multicompartment & electricity free design."

Product Description	Revolutionize meal preparation by blending convenience through portable, multi compartment electricity free design.
Benefit Proposition	Fully mechanised blending operation integrated with a multi compartment bottle.
Business/Humanitarian Goals	The product will need 3 months of development and prototype. Supplement fitness prototype and kitchen appliances. Initial 15% market share gain 35% profit margin
Primary Target market	Domestic Users
Secondary Target market	Travel and outdoor enthusiasts, Restaurants and cafes, Fast food chains, Health and fitness enthusiasts.
Assumptions and Constraints	Durable, Leak proof design, compact, size constraints, complex power transfer.
Stakeholders	Retailers, E-commerce, Restaurant chains, Bottle and Blender Manufacturers.
Avenues for Creative Design	Compact, Modular, electricity-free, novel mechanical mechanism
Scope limitations	Bottle material, mechanism used in blender, size of compartments.

INFORMATION GATHERING

- Online Surveys & Intercept Surveys (70+ responses)
- Top 3 Customer requirements were Versatile, Durable & Safe
- Nutribullet, Prestige, Ninja, Wonderchef are three competitors in this product category.
- Potential customers :- Fitness enthusiasts, Students, Travellers, Parents, Elderly individuals
- Avenues for creative design :- Compact, Modular, Electricity free, Manually operated, Safety

FUNCTION STRUCTURE ANALYSIS

FAST DIAGRAM

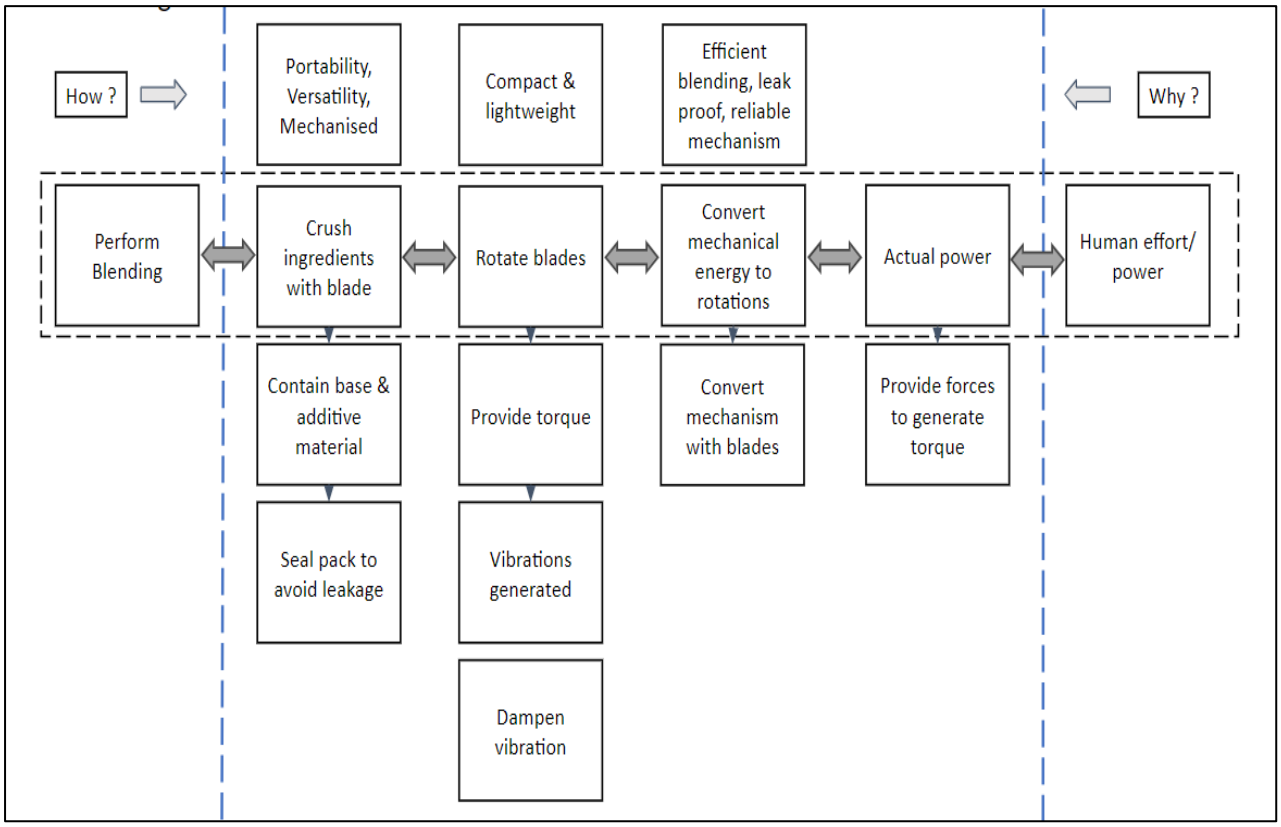

The FAST (Function Analysis System Technique) diagram serves as a comprehensive tool for the analysis of a multi-compartment blender's functions. It begins by aiding in the identification of the primary functions, encompassing tasks such as blending, chopping, and customization. This diagram then facilitates a hierarchical representation of these functions, breaking down intricate operations into more manageable sub-functions. Through the illustration of relationships and dependencies between different functions, the FAST diagram helps pinpoint critical functions and those reliant on others. Moreover, it becomes instrumental in identifying opportunities for design improvements or innovations by deconstructing the system into its core functions. Providing clarity on the system's primary goals, the diagram showcases what the blender needs to achieve and how various functions contribute to these overarching objectives. With a user-centric analysis, the FAST diagram ensures that the identified functions align seamlessly with user needs and expectations. Beyond that, it proves valuable in problem-solving scenarios, enabling teams to analyze issues or inefficiencies within the system.

GENERALIZED BLACK BOX

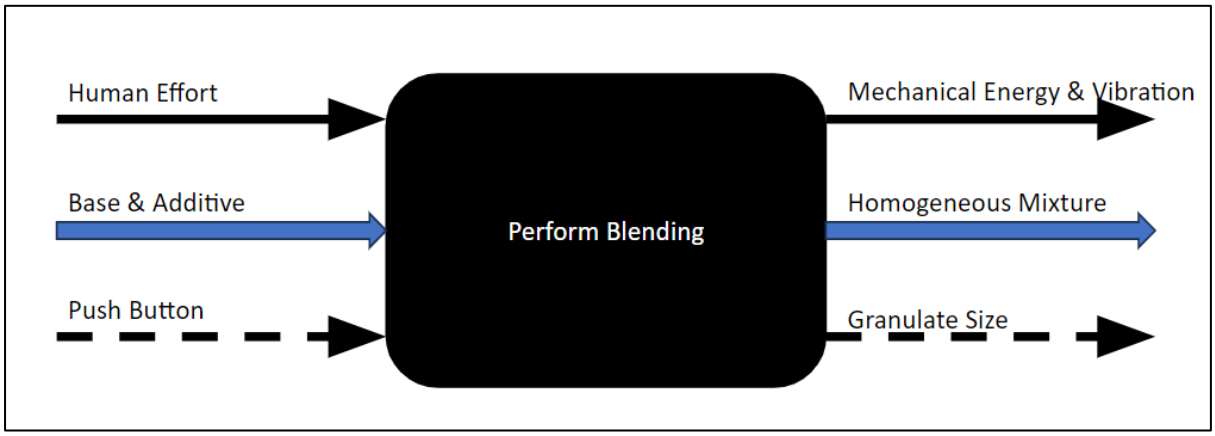

EXPANDED BLACK BOX

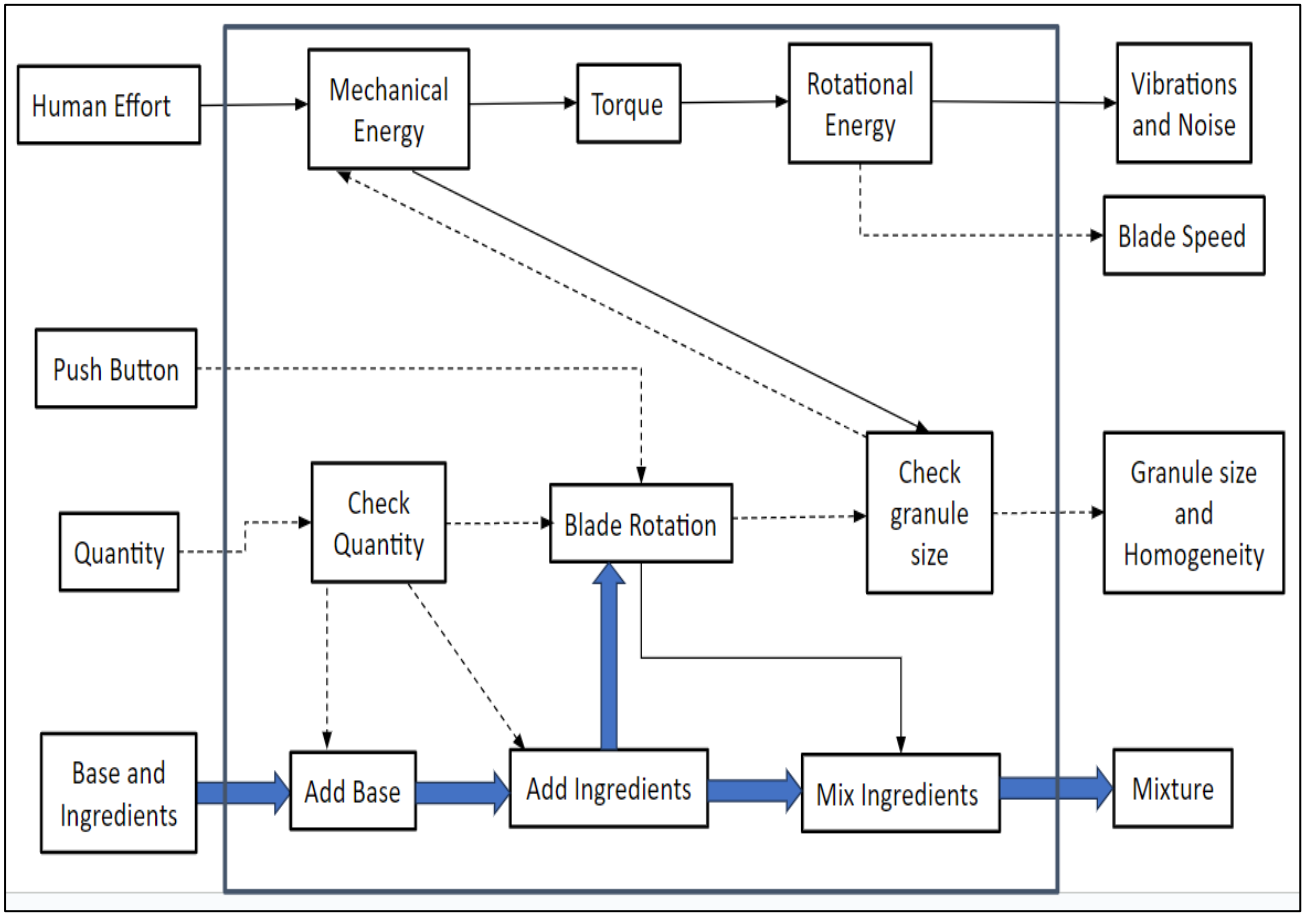

Analyzing the multi-compartment mechanical blender involves a detailed examination of various aspects. Firstly, the interaction among individual components, including the motor, blades, compartments, and control mechanisms, is crucial to understanding their roles and relationships. The flow of energy throughout the system is then traced, identifying how it is transferred and utilized during different blending operations, encompassing power input, mechanical movement, and heat generation. Additionally, the examination extends to the material flow, scrutinizing how ingredients move within the blender and analyzing the pathways and mechanisms facilitating their transfer, mixing, and processing in different compartments.

Further exploration delves into the electronic and control systems, understanding how signals are processed to control blending speeds, activate functions, and ensure safety features. The user interface elements, such as buttons, displays, and controls, are then evaluated to analyze how user inputs are processed, translated into actions, and provide feedback to users. Safety mechanisms, including lid locks, automatic shut-offs, and overload protections, are investigated for their contribution to enhancing user safety during operation.

Considering the environmental impact, a thorough analysis is conducted on waste generation within the blender, such as food scraps and worn-out components, and how the design facilitates or hinders environmentally friendly disposal or recycling. Durability and wear are assessed, identifying potential points of failure and analyzing how the design contributes to the overall longevity and robustness of the blender.

The study extends to noise and vibration analysis, scrutinizing the generation and transmission of noise and vibrations during blender operation. Design features that minimize noise levels and ensure stability during different blending processes are considered. Finally, the evaluation encompasses how the blender manages heat generated during operation and the design features that facilitate effective heat dissipation to prevent overheating and ensure optimal performance. The customization and adaptability of the blender's features to different blending needs, along with the ease with which users can tailor their blending experiences, are also examined.

ACTIVITY DIAGRAM

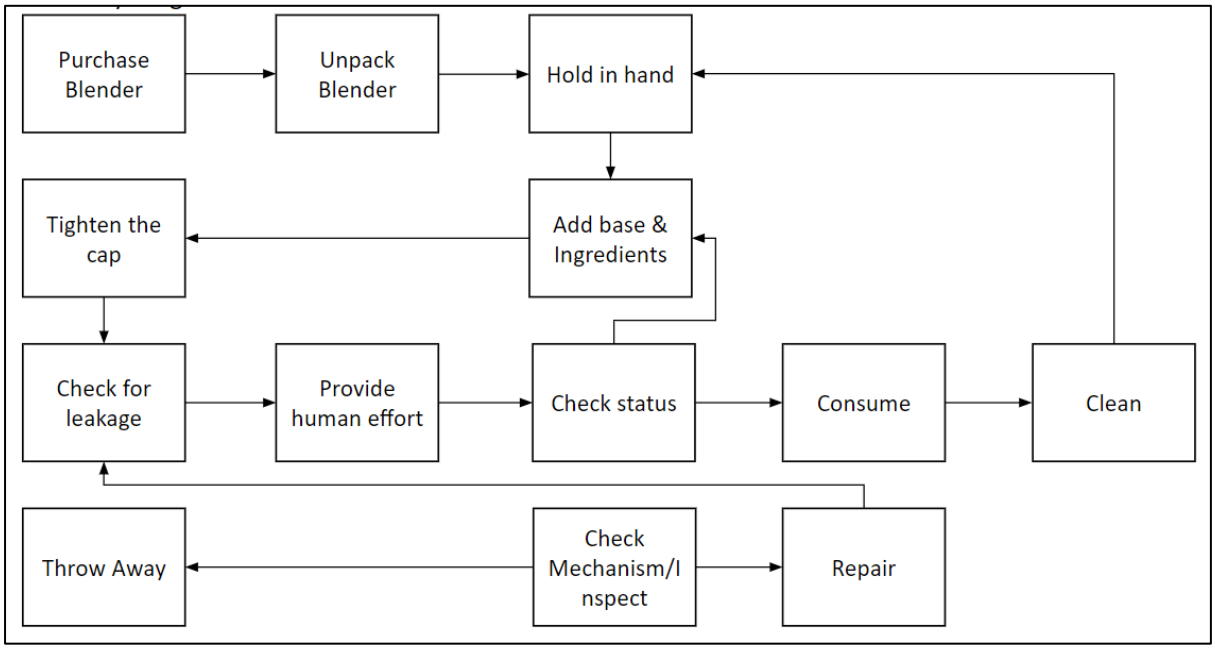

In an activity diagram tailored for a multi-compartment mechanical blender, a visual depiction unfolds, illustrating the diverse activities and processes inherent to the system. This comprehensive representation allows for several insightful analyses. Firstly, the sequential workflow is meticulously examined to discern the step-by-step progression of activities throughout the blending process, encompassing user inputs to the ultimate completion of the blending operation. Concurrently, the diagram unveils activities that can transpire simultaneously or in parallel, showcasing the blender's multi-functionality, especially evident in the simultaneous blending within different compartments.

User interactions play a pivotal role in this analysis, as the integration of user inputs, such as adjusting blending speeds or selecting functions, significantly influences the ongoing activities. Decision points within the activity flow are identified, signifying moments where the system may diverge based on conditions like user preferences or safety considerations. The activity diagram is also scrutinized for its adeptness in addressing error handling and exceptional scenarios, contemplating features like automatic shutdown in response to overloading or malfunction.

Integral to user experience, the diagram sheds light on how the system communicates feedback to users, revealing points in the activity flow where the blender conveys the status of the blending process or potential issues. Furthermore, the initialization and shutdown procedures are explored, unveiling the activities involved in preparing the blender for use and ensuring a safe shutdown post-blending.

Resource utilization is a critical aspect of the analysis, delving into how resources like motor power and energy are harnessed throughout the blending process. This encompasses activities contributing to efficient resource management. Additionally, customization points are

identified within the activity diagram, showcasing activities related to adjusting blending settings, selecting compartments, or incorporating additional functionalities to tailor the blending experience.

The overall efficiency of the blending process is assessed, with a keen eye on identifying any redundant activities, bottlenecks, or areas where optimization could enhance system performance. Finally, if relevant, the integration of the blender's activities with other systems or external inputs is explored, contemplating aspects like compatibility with smart home devices, external sensors, or connectivity features. In essence, the activity diagram provides a holistic understanding of the operational dynamics and user interactions within the multi-compartment mechanical blender system.

CONCEPT GENERATION

GENERATED CONCEPTS

6 – 3 – 5 METHOD WAS USED FOR BRAINSTORMING.

Concepts	l	ll	lll	lV
Blade Location	Top	Top	Bottom	Bottom
Blade Material	HDPE	Metal	HDPE	Metal
Bottle Material	Plastic	Plastic	Plastic	Plastic

CAD MODELS

Blade Location -

Top

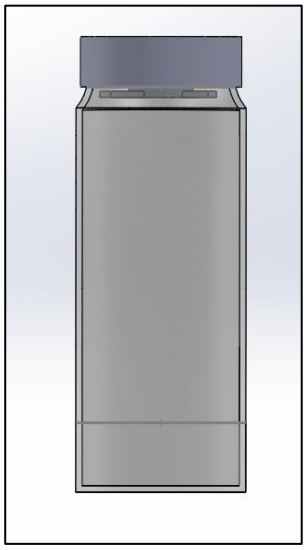

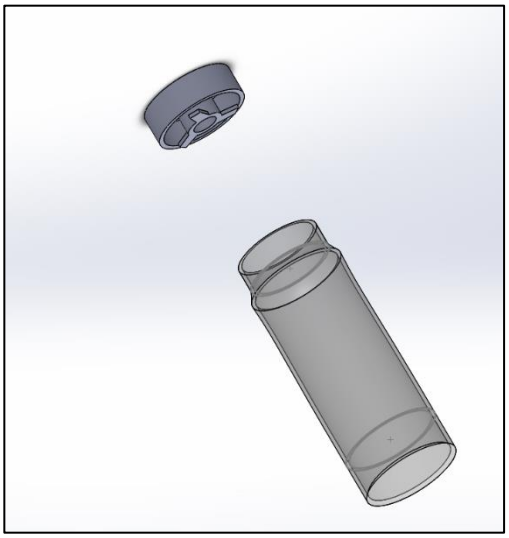

Blade Location -

Bottom

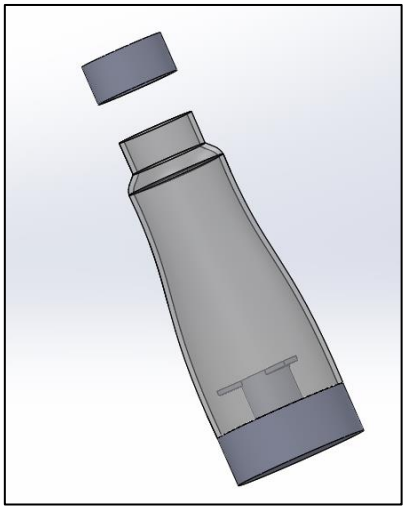

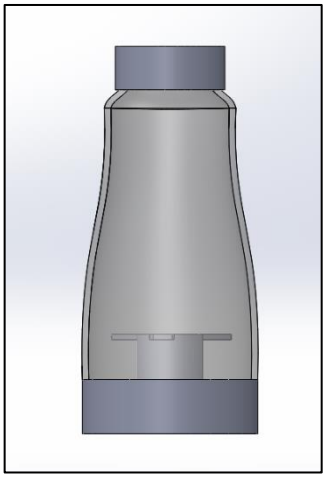

CRITERIA SELECTION FOR ANALYSIS: -

1. Cost:
    - Cost is a crucial factor in the development of a blender. It includes not only the manufacturing cost but also the price at which the product will be sold to consumers.
    - Design choices, materials, and manufacturing processes all impact the cost of the blender.
2. Weight:
    - The weight of a blender affects its portability and ease of use. A lightweight blender is easier to carry and handle.
    - However, it's important to strike a balance, as a too-light blender may feel flimsy and less stable during operation.
3. Ease of Clean & Use:
    - A user-friendly design is essential. The blender should be easy to set up, operate, and clean.
    - Features like removable, dishwasher-safe components and intuitive controls enhance the user experience.
4. Safety:
    - Safety is paramount in appliance design. The blender should include safety mechanisms to prevent accidents such as '*lid on blending*'.
    - This may involve features like blade locking systems and secure lid locking.
5. Durability:
    - A durable blender is essential to ensure a longer product lifespan and customer satisfaction this refers to blade, and internal mechanical components such as gear, spring, connecting shaft etc.
    - Material selection, build quality, and robust construction are key to achieving durability.
6. Portability:
    - Portability is important for users who want to move the blender around, whether for storage or use in different locations.
    - Features like compact design, weight contribute to portability.
7. Technical Difficulty:
    - The technical complexity of the blender's design and assembly affects both manufacturing and repairability.
    - Reducing technical difficulty can make production more efficient and maintenance easier.
8. Time to Make:
    - The time required for manufacturing and assembly impacts production efficiency.
    - Minimizing the time to make each unit can lead to higher productivity and shorter lead times.
9. Added Functionality:
    - Modern blenders often come with additional functions beyond basic blending, such as food processing, ice crushing, and smoothie presets as well as ergonomic strap hold storage compartments.
    - The extent of added functionality should be carefully considered and balanced with the overall design and cost.
10. Sustainable & Environment Friendly:

- In an environmentally conscious world, designing a blender with sustainability in mind is important.
- This includes using recyclable materials, reducing energy consumption, and minimizing waste throughout the product's life cycle.

These criteria are considered during the design and development of a mechanically operated blender to create a product that meets user needs, which is competitive in the market and aligns with environmental and safety standards. Successfully integrating these criteria will produce a well-rounded blender that appeals to consumers.

PUGH CHART

	Criteria/Concepts	I	II	III	IV	Datum Borosil nutrifresh
1	Cost	+	+	+	+	0
2	Weight	+	+	+	+	0
3	Ease of Clean & Use	+	+	=	=	0
4	Safety	=	=	+	+	0
5	Durability	-	+	-	+	0
6	Portability	+	+	=	=	0
7	Technical Difficulty	-	-	+	+	0
8	Time to make	+	=	+	=	0
9	Added Functionality	+	+	=	=	0
10	Sustainable & Environment Friendly	-	+	-	+	0

	Pluses	6	7	4	5	
	Minuses	3	1	2	5	
	Equals	1	2	4	0	
	Net	3	6	2	0	
	Rank	2	1	3	4	

WEIGHTED DECISION MATRIX: -

Weighted decision matrix was calculated for the above-explained criteria. Weights were initially assigned according to priority.

(Scale 1-5)

Criteria/Concepts	Weight	Concept I	Concept ll	Concept lll
Cost	8	0.32	0.32	0.32
Weight	10	0.4	0.4	0.4
Ease of Clean & Use	12	0.48	0.48	0.36
Safety	8	0.24	0.24	0.24
Durability	12	0.24	0.24	0.24
Portability	12	0.48	0.48	0.48
Technical Difficulty	8	0.24	0.24	0.32
Time to make	10	0.4	0.4	0.4
Added Functionality	10	0.4	0.4	0.3
Sustainable & Environment	10	0.3	0.4	0.3

Friendly				
Total		3.5	3.56	3.42
Rank		II	I	III
DEVELOP?		NO	YES	NO

From overall analysis of the two methods it was observed that concept II exhibited critical parameters.

PROTOTYPING

DEFINE OBJECTIVES AND REQUIREMENTS:

- To verify if the designed models function as intended.
- Evaluate user interaction with product and ergonomic study.
- Compatibility & integration of product.
- Assess ease of maintenance for design features that facilitate disassembly, cleaning, and reassembly
- Evaluate the cost-effectiveness of the design, considering manufacturing processes

STEPS INVOLVED IN PROTOTYPING

Conceptualize Design:

- From the concept generation and selection, we had initial specifications to create a conceptual design for the prototype.
- Considered different locations for the placement of compartments, the type of mixing mechanism, operation features.
- Studied few of mechanism which will give quick and constant energy output, tried few which includes wind up mechanism (Torsional spring), Hand Crank, string puller but decided to go with gear amplification

Create a 3D Model:

- Developed a detailed 3D model with reference of concept generation for multicompartment mechanical blender using computer-aided design (CAD) software solidworks.
- Iterated the design with different dimensions to fit all the necessary parts without hampering their functioning.
- The model included all compartments, moving parts, controls, and interfaces to visualize before proceeding for manufacturing.

Prototyping Method:

- Used the inhouse FDM 3D printers to quickly prototype the design, PLA material was used.
- 3D Printing: Ideal for complex shapes and small batches.

Build the Prototype:

- Used the chosen prototyping method to create a physical model of the multicompartment mechanical blender.
- Ensured that the prototype closely represents the intended design and functionality and after investigating first iteration, made few changes in design of threads, thickness of parts, tolerances for product fit and then proceeded for further iterations.

Functional Testing:

- Initially printed functional parts such as mechanism to ensure the feasibility then conducted rigorous functional testing to ensure mechanisms work as intended.
- First mechanism design used were tested and found out that it is inefficient in terms of power output so the gear amplification mechanism i.e. planetary gear system were used.

Evaluate User Interaction:

- Assess the user interface, control placements, and overall user experience.
- Gather feedback from potential users to identify any design improvements.

Safety Testing:

- Verify that all safety features are effective and meet regulatory standards.
- Identify and address any potential safety hazards.

Iterative Design Process:

- Use the feedback from functional testing, user interaction evaluation, and safety testing to make design improvements.
- Repeat the prototyping process if necessary, refining the design with each iteration.

Cost Analysis:

- Evaluated the cost of materials, manufacturing processes, and assembly for the prototype.
- Identify opportunities for cost reduction without compromising performance.

DESIGN FOR MANUFACTURABILITY AND ASSEMBLY (DFMA):

a. Simplifying Components:

- Initially designed the component with windup mechanism which had 21 components then improved the mechanism with gear amplification and applied planetary gear system.
- The new mechanism has total of 8 parts which reduces the assembly time and costs.
- Combined the functions of triaxle part of planetary gear and cap connector onto the cap of bottle to make it as one part.

b. Standardize Parts:

- Used the standardized dimensions of threading on bottle to cut down special machines to manufacture the same, also used the standard dimensions of gear.

c. Ease of Assembly:

- Designed all the gear i.e., Sun gear and planetary gears of same size to cut down time in distinguishing and also to follow same design standards.
- Designed triaxle parts for easy alignment and assembly on to ring gear.
- Minimized the need for specialized tools during assembly.

d. Tolerance and Fit:

- Designed parts with appropriate tolerances to ensure proper with additive manufacturing technique (FDM) to have a good fit during assembly and operation.
- Used the modular design principles to facilitate part replacement and maintenance.

DESIGN FOR ENVIRONMENT (DFE):

Material Selection:

- PLA material is used for prototyping the product but for market ready product these could be made of steel and HDPE
    - Stainless Steel - Blades, Gear, Connecting Shafts
    - HDPE – Bottle Body, Compartment
- To make product more durable and sustainable then all components could be manufactured using recyclable metals.

End-of-Life Considerations:

- As mentioned, the blender has 8 parts which makes it easy with disassembly in mind to facilitate recycling.
- Clearly mark recyclable components.

HUMAN FACTORS:

a. User Friendly Design:

- Product is intuitive to use as there is only one rotating part and the cap will be fixed on bottle.
- Bottle has outer diameter of 70 mm which makes it easy to have hold of.
- Total weight of empty bottle is around 210 grams which makes it easy to carry
- The mechanism uses the forces less than 12 Nm torque on cap which enables to operated by any age group.
- The input rotations can be given in any clockwise or anticlockwise manner making it universal design (includes right & left-handed people)
- Compartments situated at bottom with twisting action to open or close it enhances the accessibility.

b. Safety Features:

- Mechanism will only function when it is mounted on bottle making design safe to operate.
- Small parts are mounted with twist notch which prevents kids from disassembling it.

c. Noise and Vibration:

- As the product features use of manual (Human Input) mechanical system, it eliminates the source of noise and vibration.
- Considered the tolerances between gear face surfaces and adjacent cap to have marginal distance to reduce noise and vibration that could be generated from friction.

d. Accessibility and Maintenance:

- Cleaning and maintenance made easy with blades mounted on top.
- Designed compartments and access points for easy cleaning and maintenance.
- Ensured that critical components are easily accessible for inspection and replacement.

TIMELINE

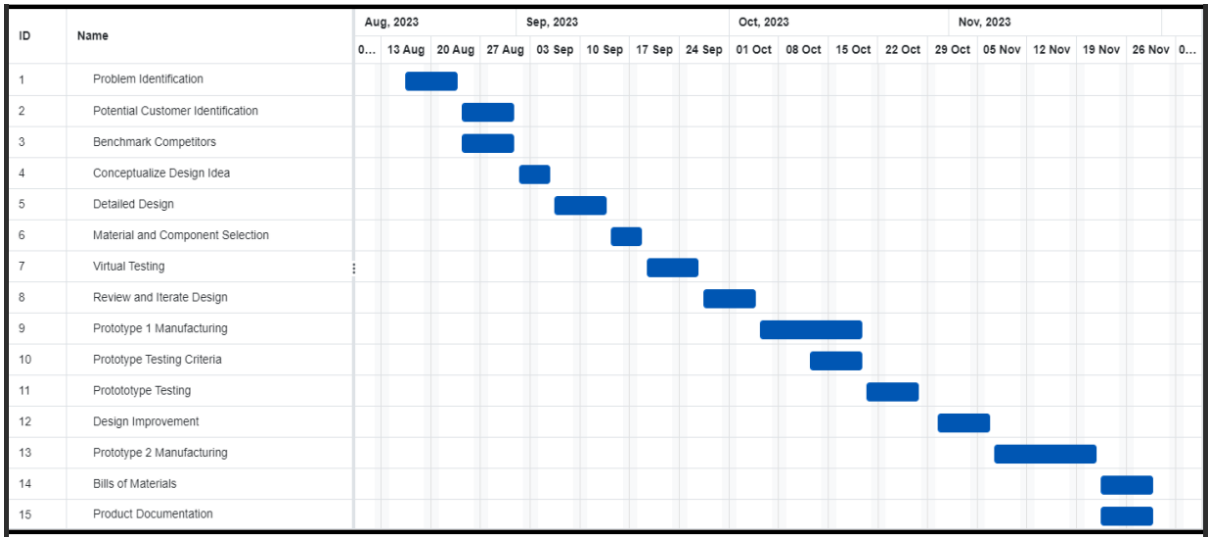
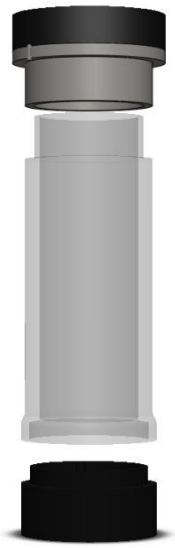
FINAL DESIGN AND PROTOTYPE