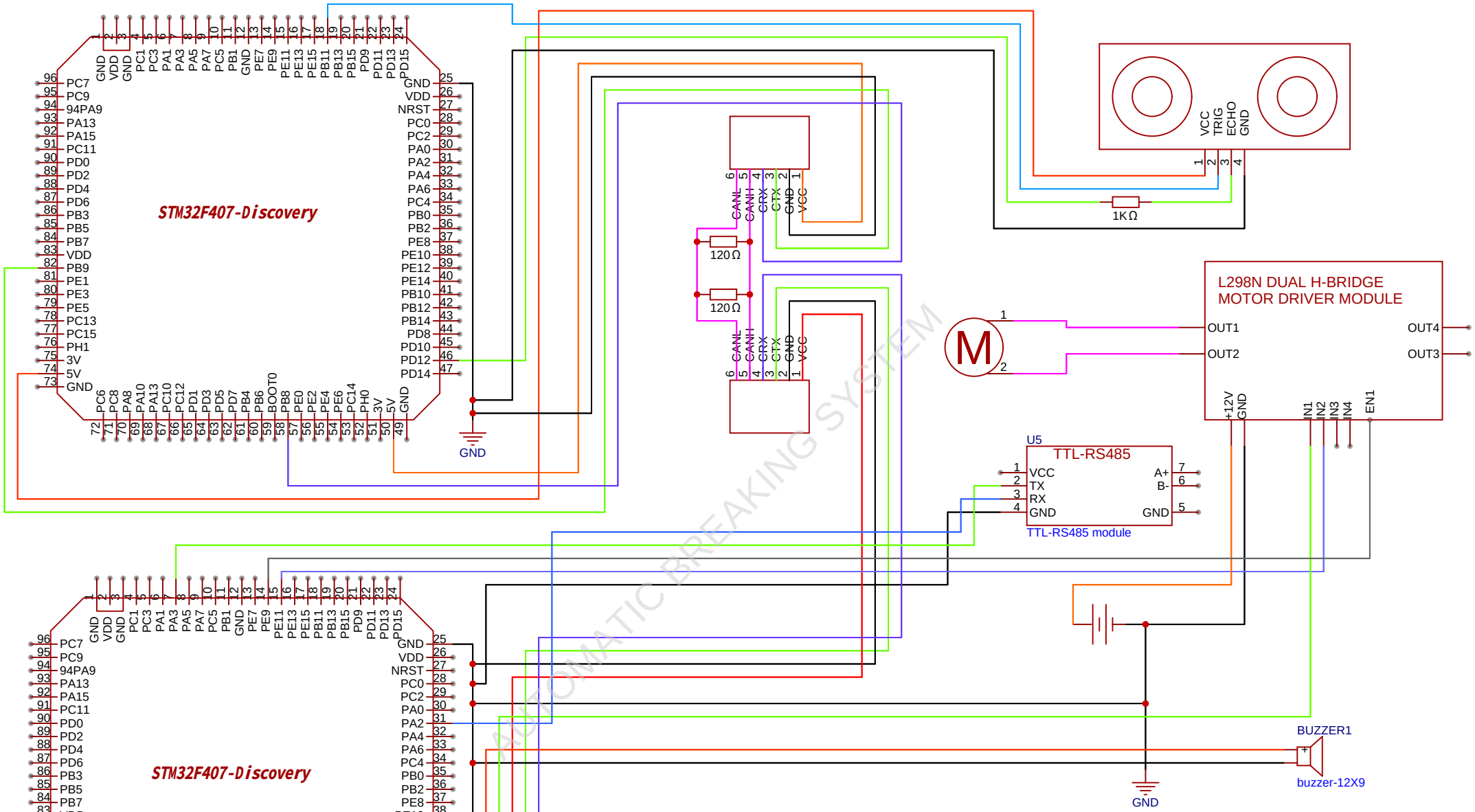

Schematic	ABS Schematic	Create at	20/12/2024
		Update at	08/02/2025
Board	STM32F407 Discovery Board	Page	P1
Drawn			
Reviewed			
		Version	Size
		V1.0	A4

Automatic Breaking System using CAN Protocol.

Page 1 Total 1

PUSHPAK SURESH ZAMBARE

EasyEDA