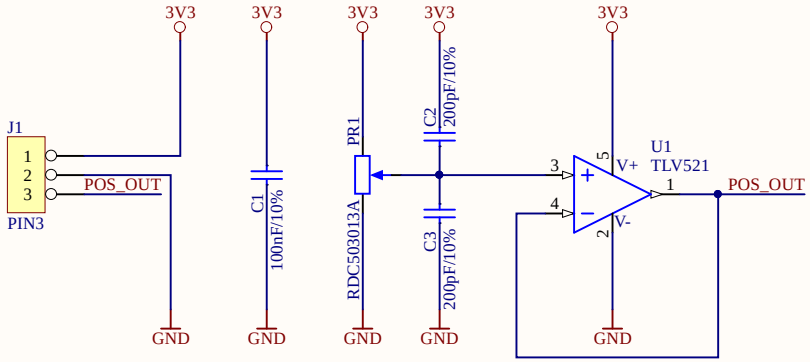

Title		
Size A4	Number	Revision
Date: 19/07/2019	Sheet of	
File: D:\Projects\..\FingerEncoder_v1.SchDoc	Drawn By:	