DETECTION OF OPTICAL VORTEX BEAMS

SAUMYA PUTHENVEETTIL

MODERN OPTICS FINAL PRESENTATION

SPRING 2019

What are Optical Vortices?

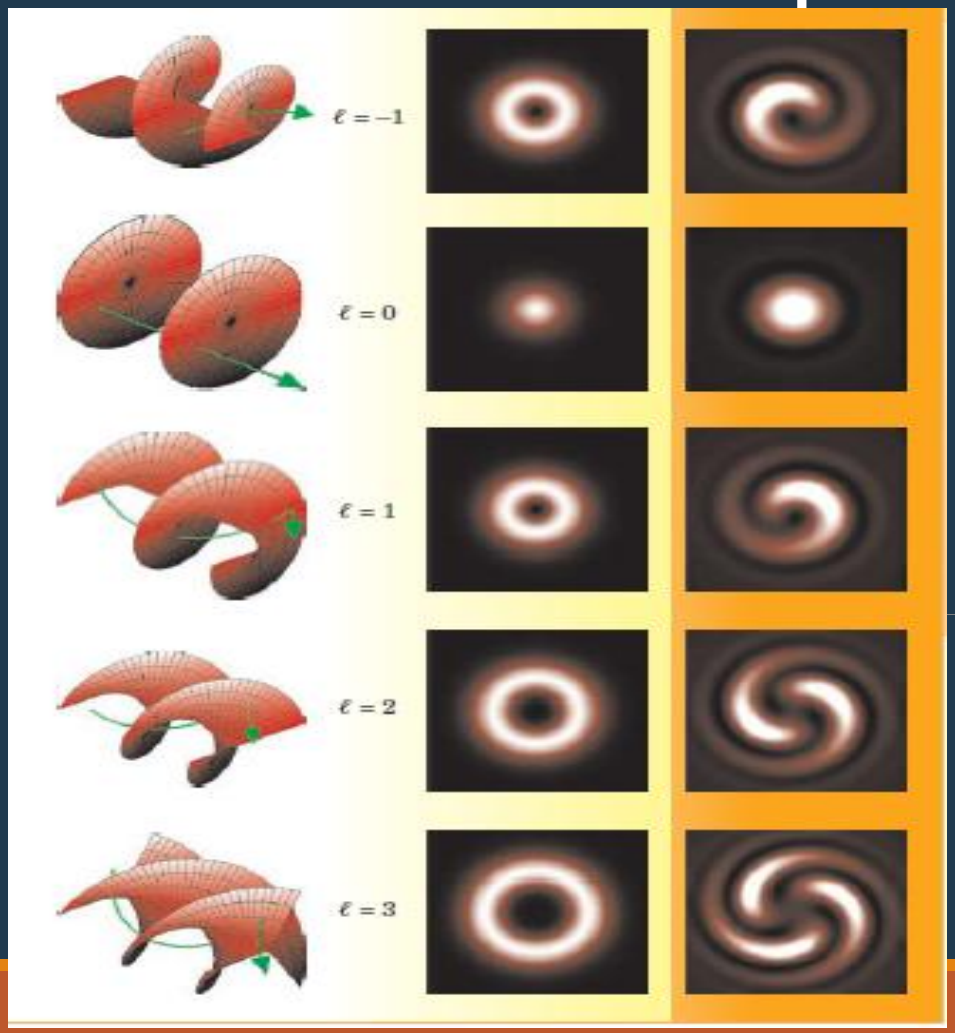

POYNTING VECTOR
= E X H

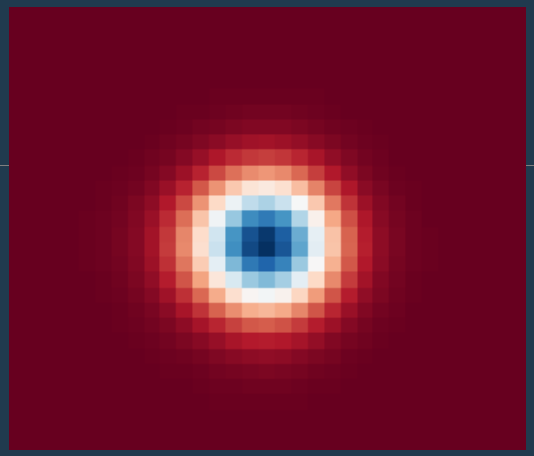

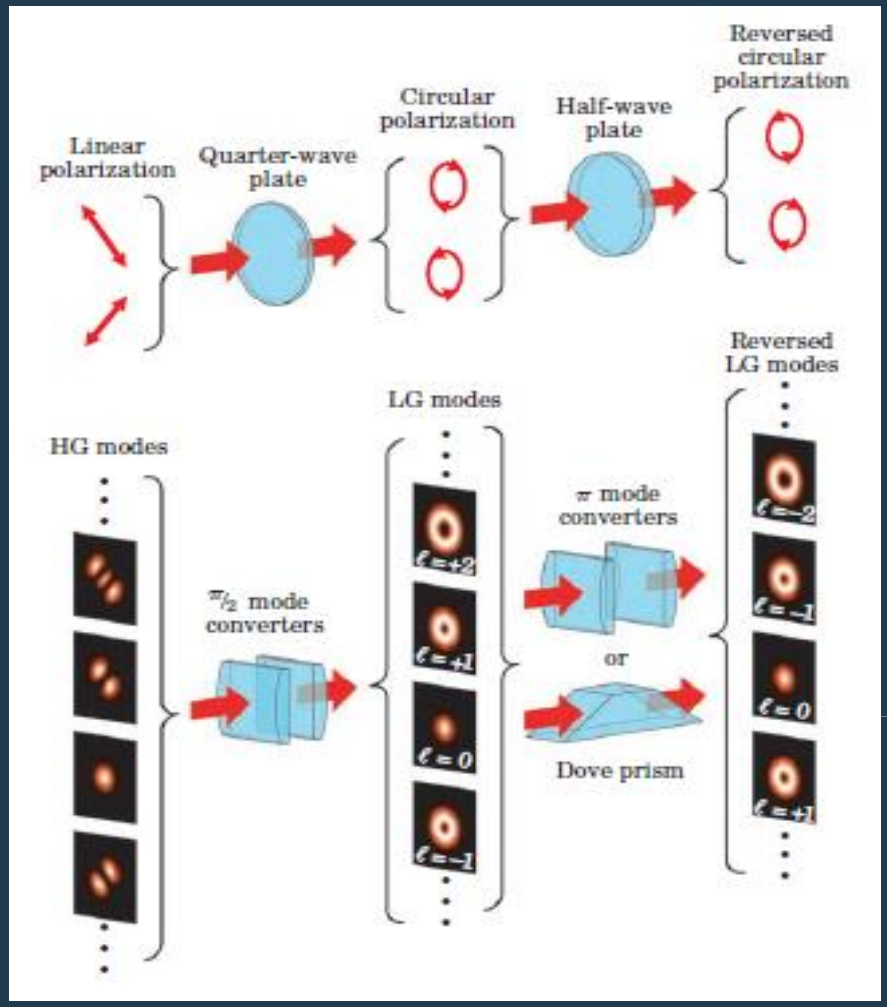

A suspended quarter-wave plate converts linearly polarized light to circular polarization

How to create the “perfect” vortex

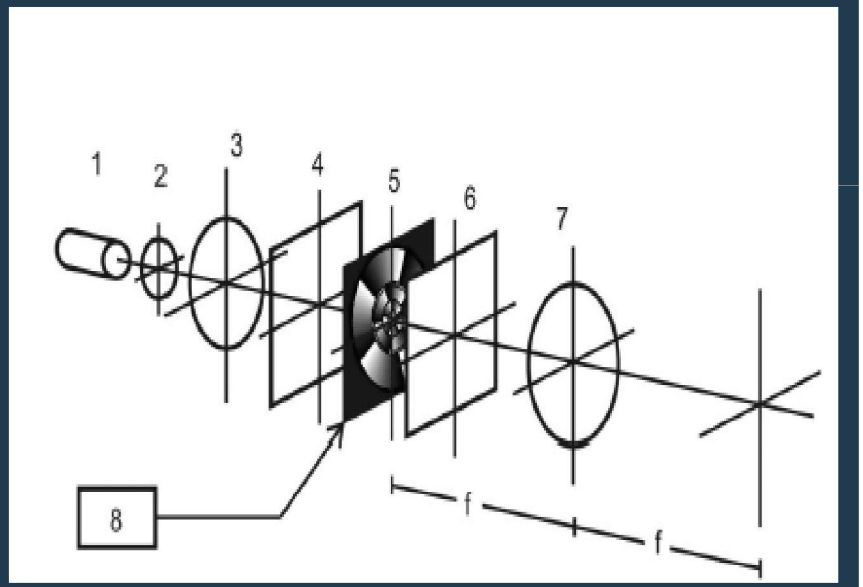

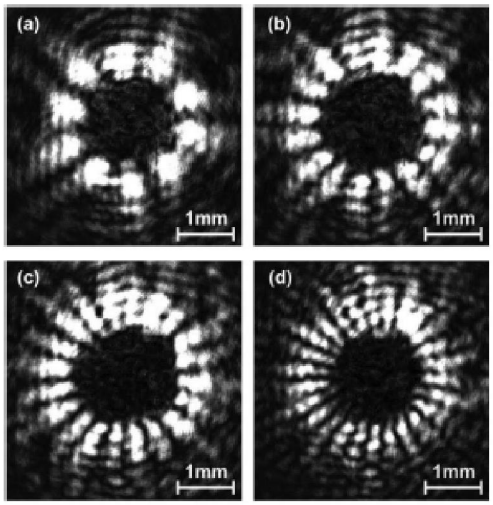

Fig. 6. Experimentally generated vortices: (a) $\nu = 5$, (b) $\nu = 8$, (c) $\nu = 10$, and (d) $\nu = 13$.

$$U_\nu(\rho,\theta) \propto \exp(i\nu\theta) \sum_{n=1}^{N} \frac{J_\nu(\alpha_{\nu,n}\rho_0/a_\nu)}{[J_{\nu+1}(\alpha_{\nu,n})]^2} J_\nu\left(\alpha_{\nu,n}\frac{\rho}{a_\nu}\right).$$

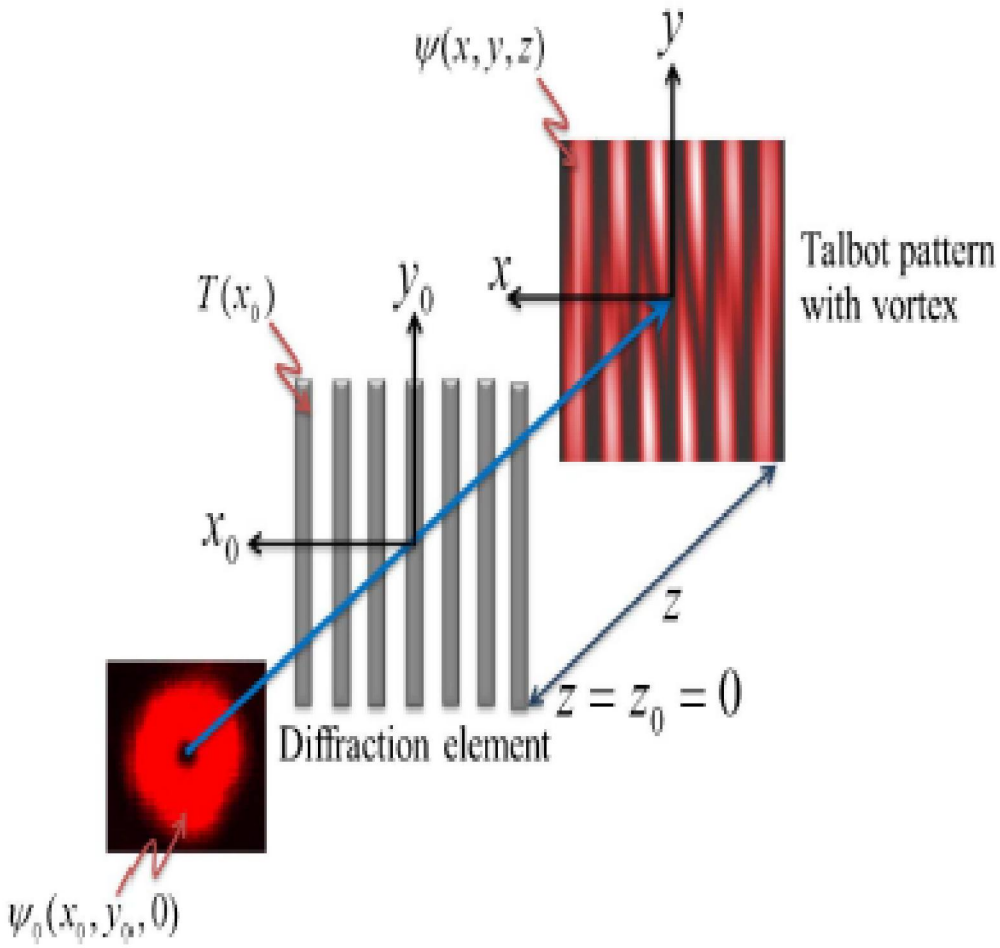

$$\psi(x,y,z) = \frac{ike^{-ikz}}{2\pi z}\int_{-Nd/2}^{Nd/2} \mathrm{d}x_0 \int_{-\infty}^{\infty} \mathrm{d}y_0 \times \exp\left\{-ik\left(\frac{(x-x_0)^2+(y-y_0)^2}{2z}\right)\right\} \times \sum_n A_n \exp\left\{ink_d\left(x_0 - \frac{qd}{2}\right)\right\}(x_0 \pm iy_0)^{|l|} \times \exp\{(-1/w^2)(x_0^2+y_0^2)\},$$

TALBOT EFFECT

detection methods:

- METHOD 1: USING SINGLE-, DOUBLE-,MULTIPLE-SLIT, AND GRATING DIFFRACTION
- METHOD 2: MIE SCATTERNG
- METHOD 3 : MACH-ZEHNDER INTERFEROMETER
- METHOD 4: SPIRAL PHASE CONTRAST

method 1: using single-, double-, multiple-slit, and grating diffraction

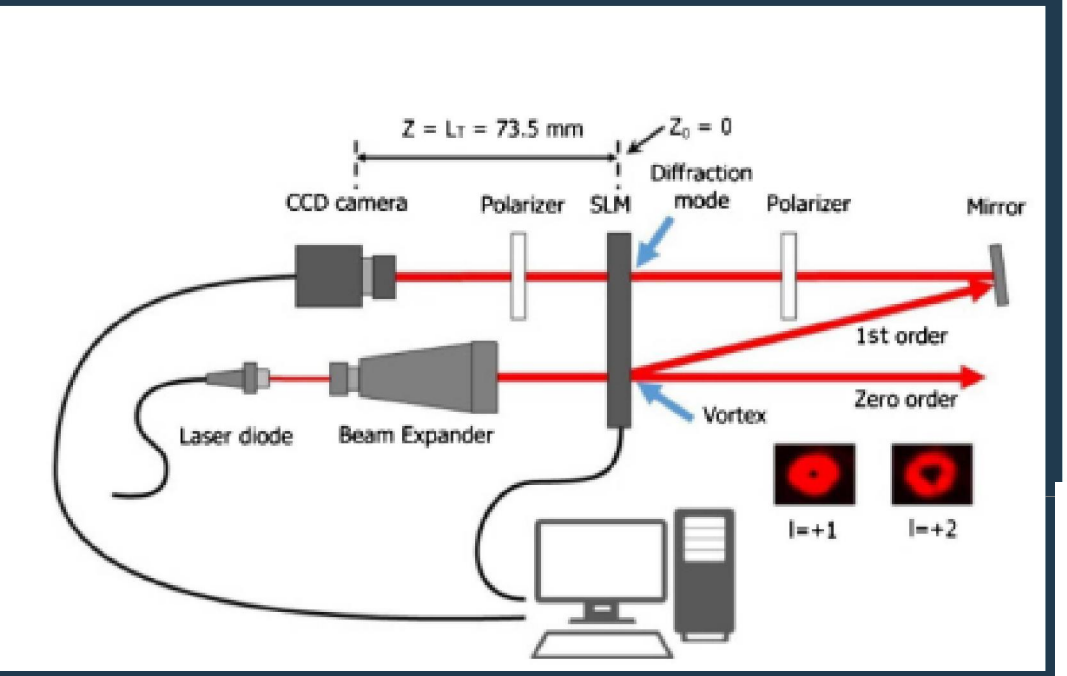

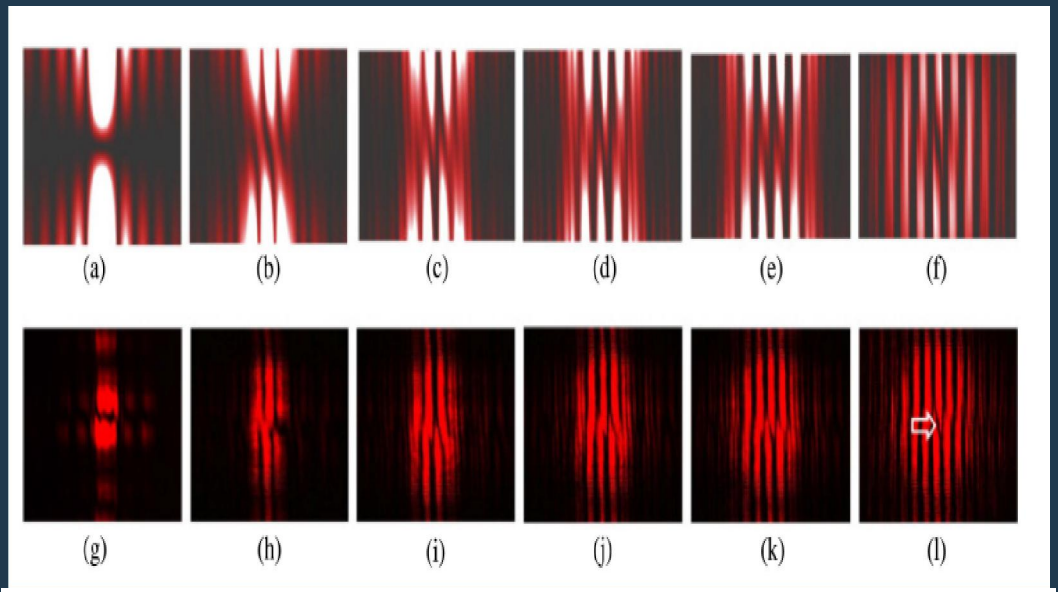

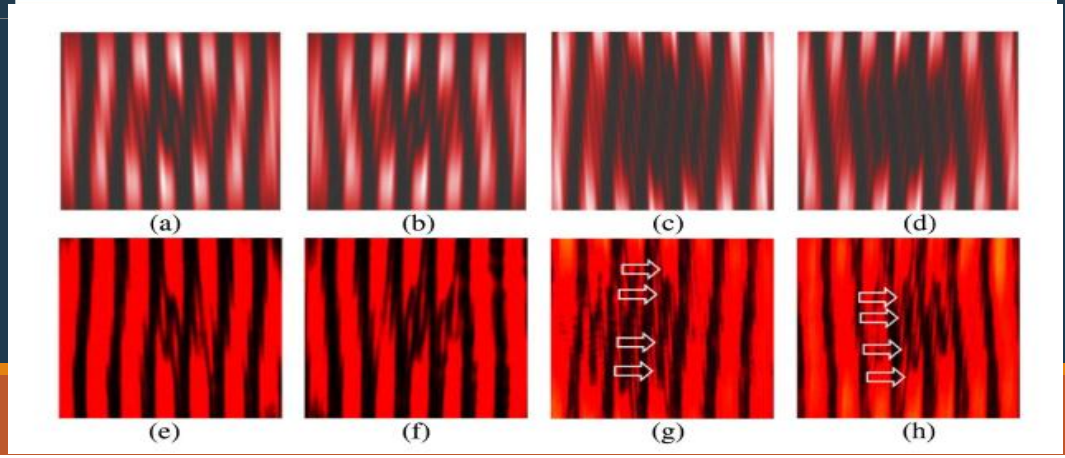

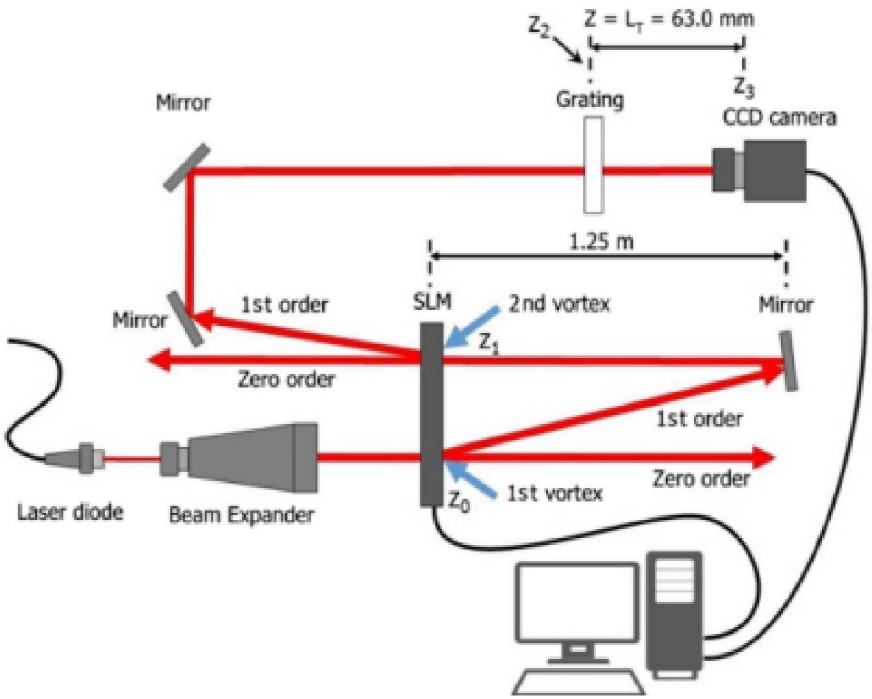

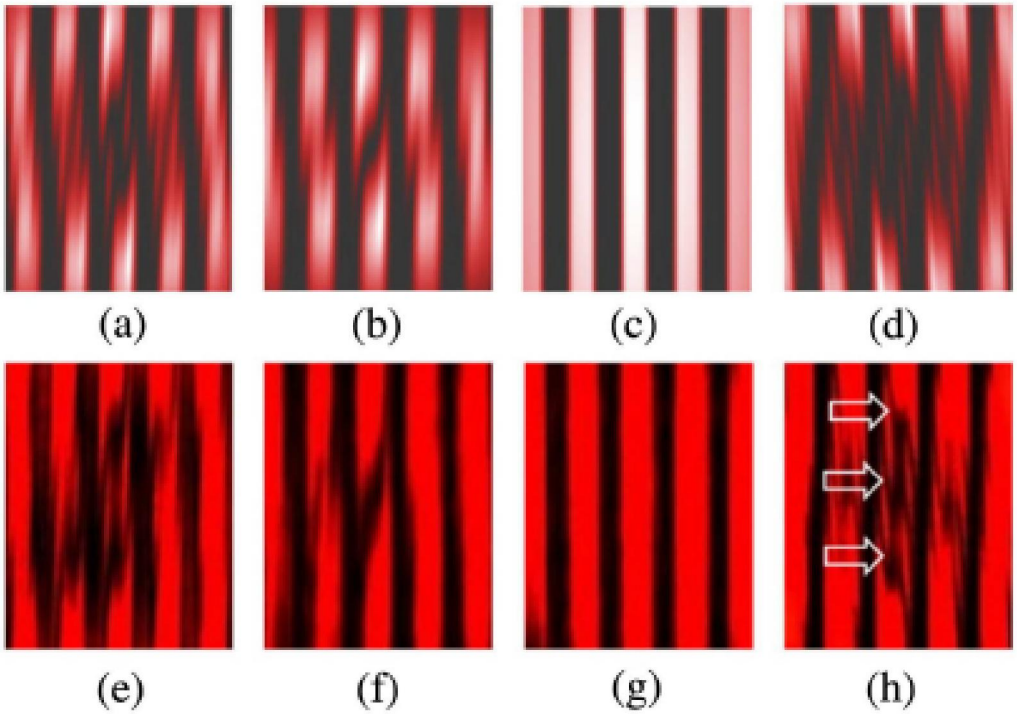

Experimental set up # 2

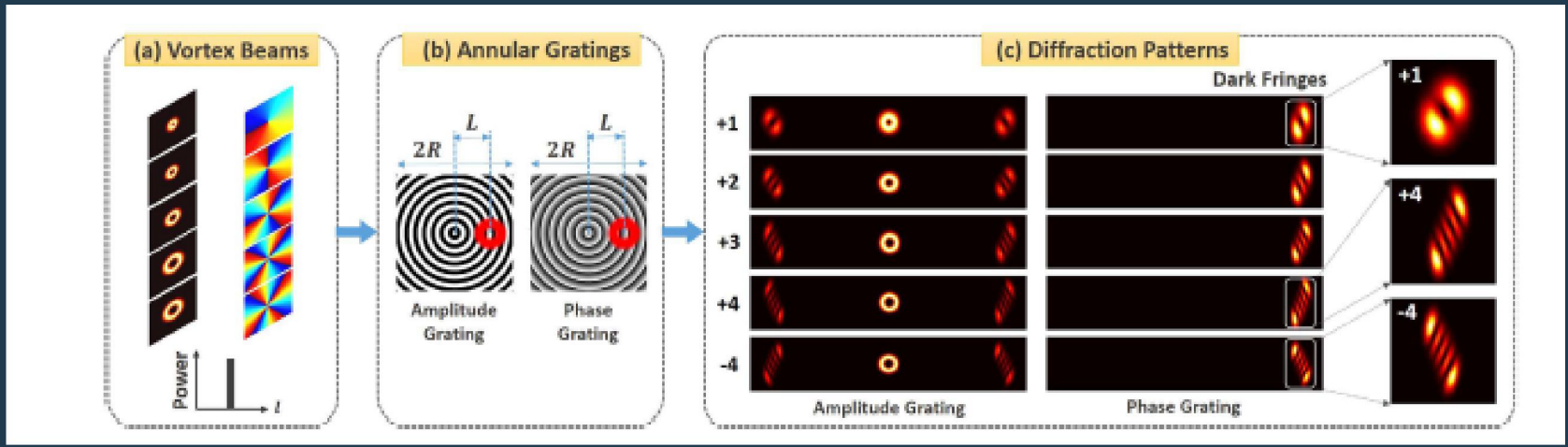
(a) Vortex Beams
Power
l
(b) Annular Gratings
2R
L
Amplitude Grating
Phase Grating
(c) Diffraction Patterns
Dark Fringes
+1
+2
+3
+4
-4
Amplitude Grating
Phase Grating

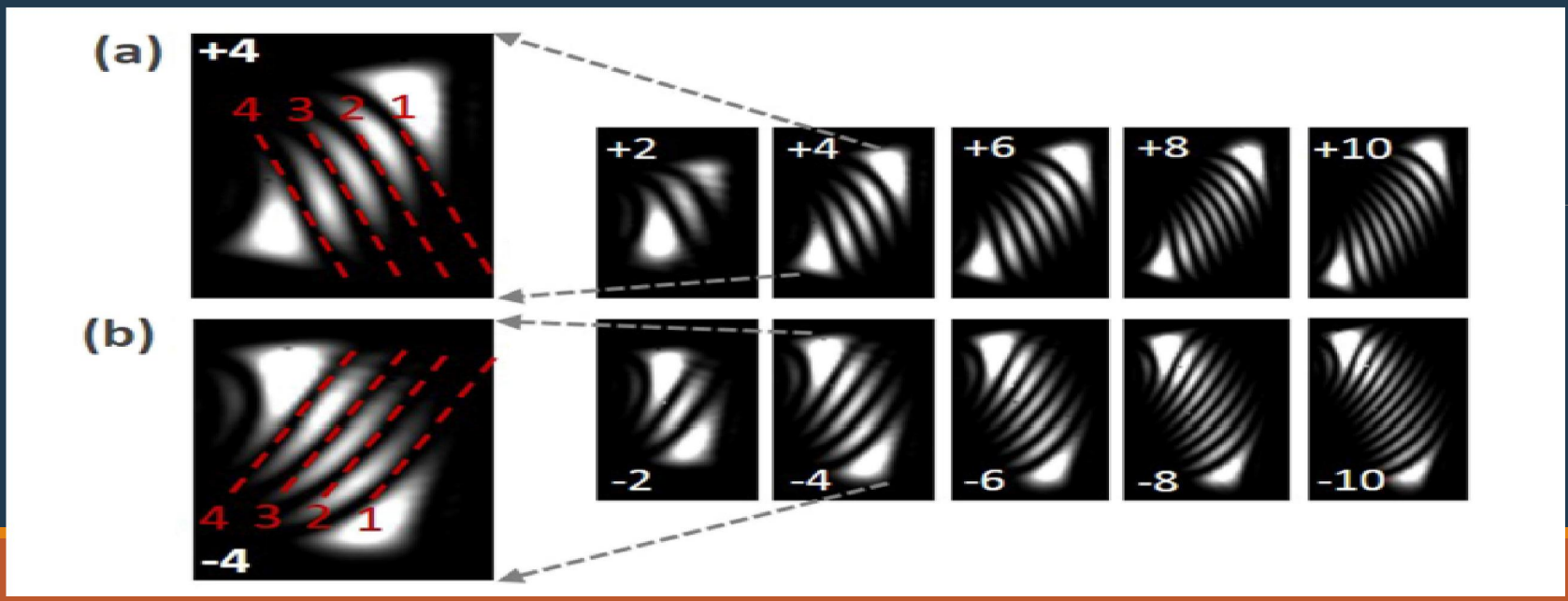
(a)
+4
4 3 2 1
+2
+4
+6
+8
+10
(b)
4 3 2 1
-4
-2
-4
-6
-8
-10

method 2: mie scattering

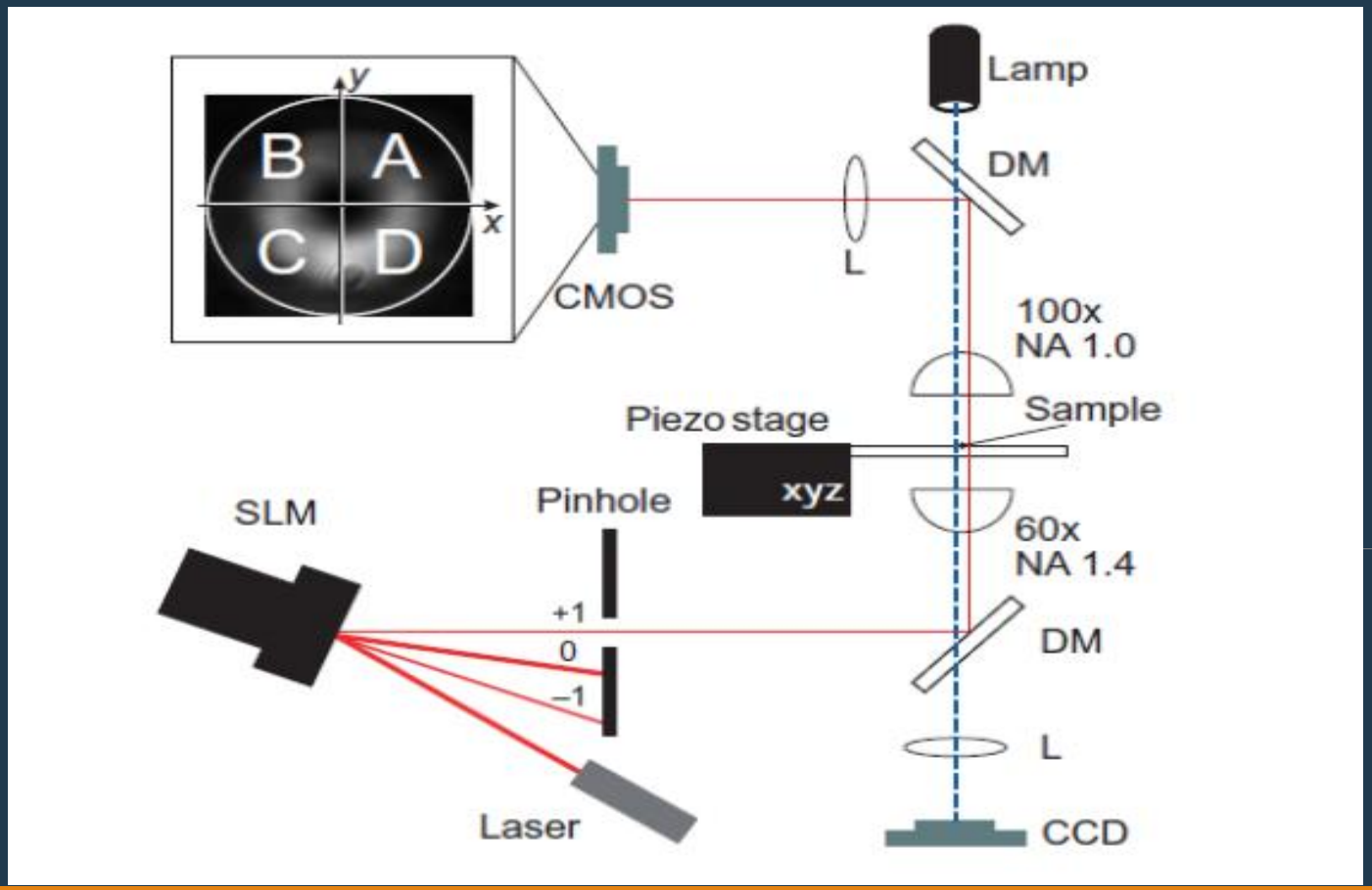

Translation of sphere in x direction

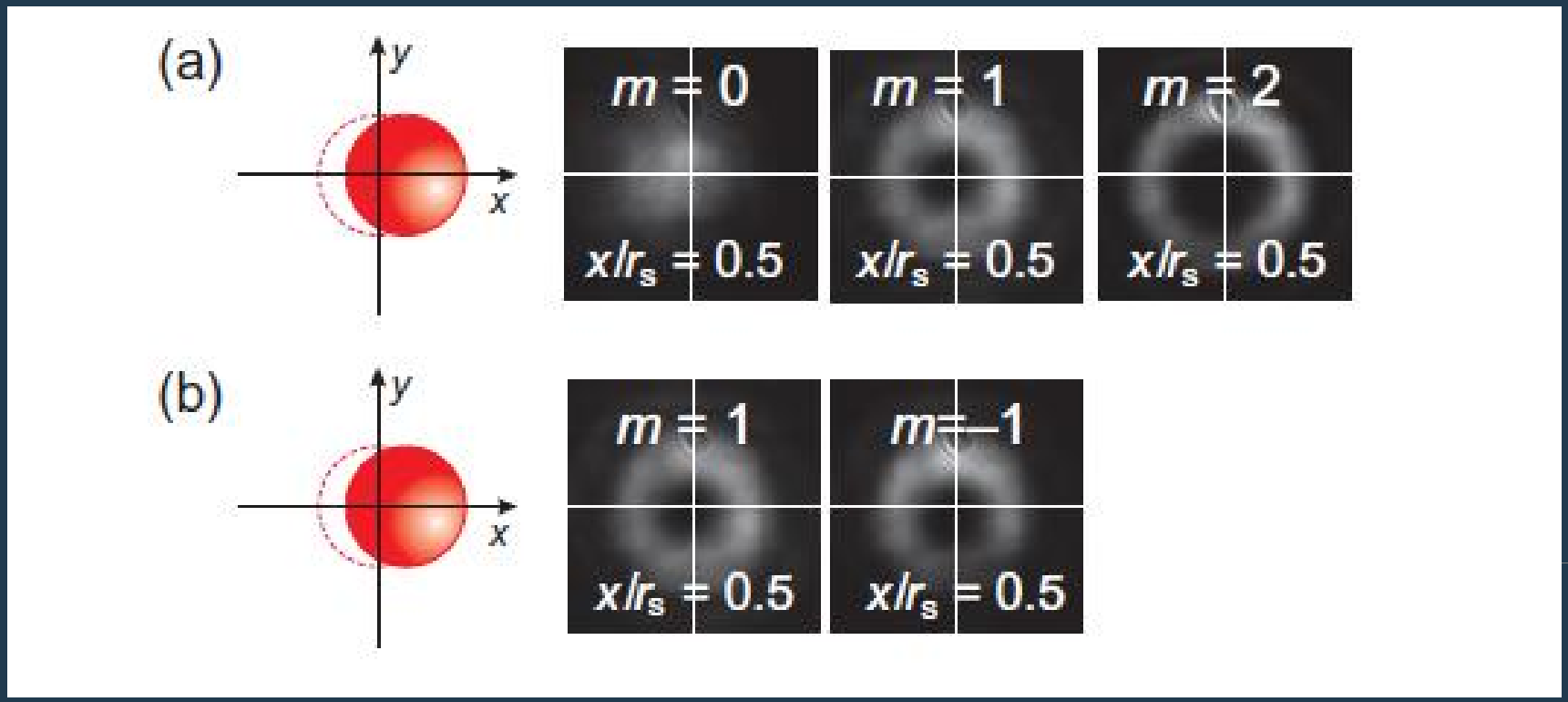

method 3 : mach-zehnder interferometer

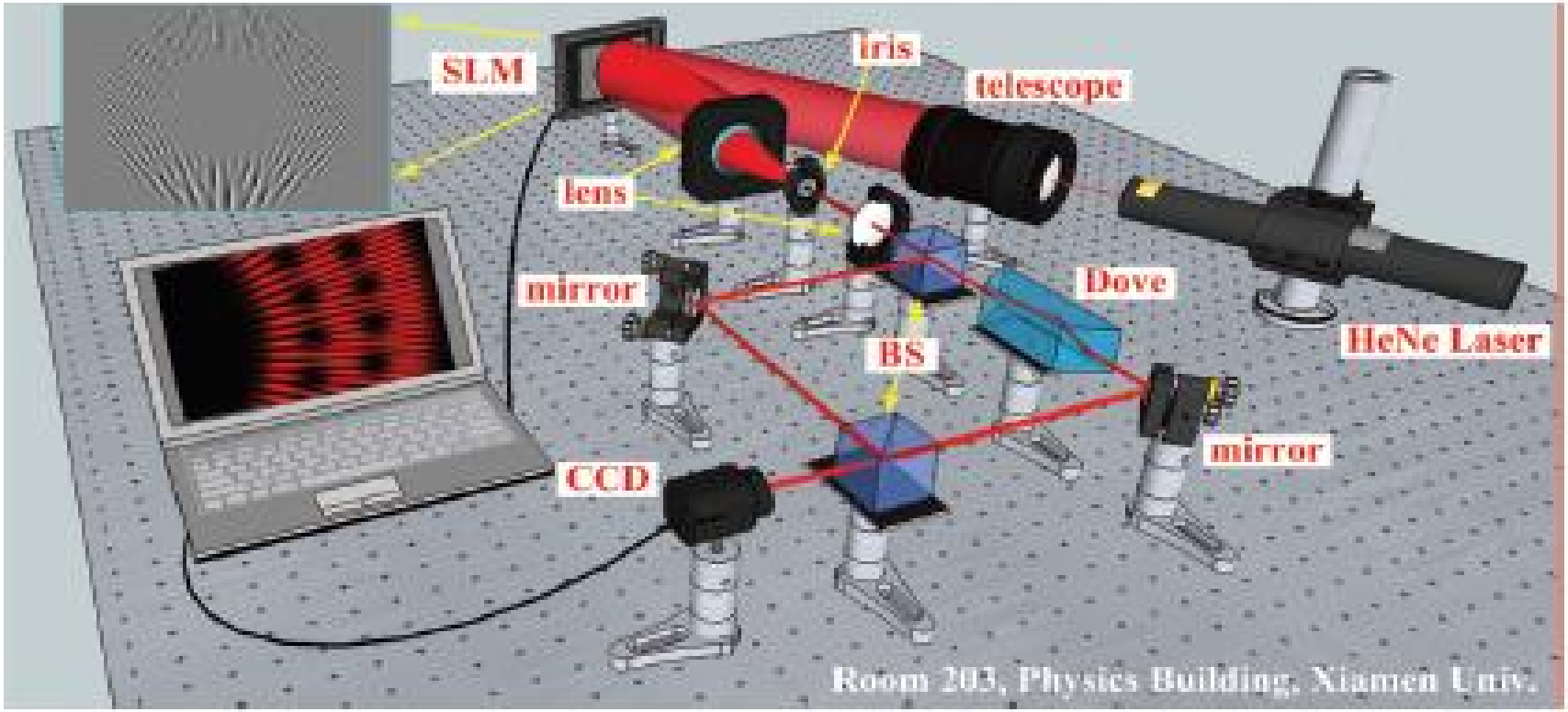

$$I(\rho,\phi) \propto \left| \sum_{\ell} \alpha_{N,\ell} R^{\ell}_{p=0}(\rho)[\exp(iN\ell\phi) + \exp(-iN\ell\phi)] \right|^2$$

$$= 2\left| \sum_{\ell} \alpha_{N,\ell} R^{\ell}_{p=0}(\rho) \right|^2 [1 + \cos(2N\ell\phi)]. \qquad (6)$$

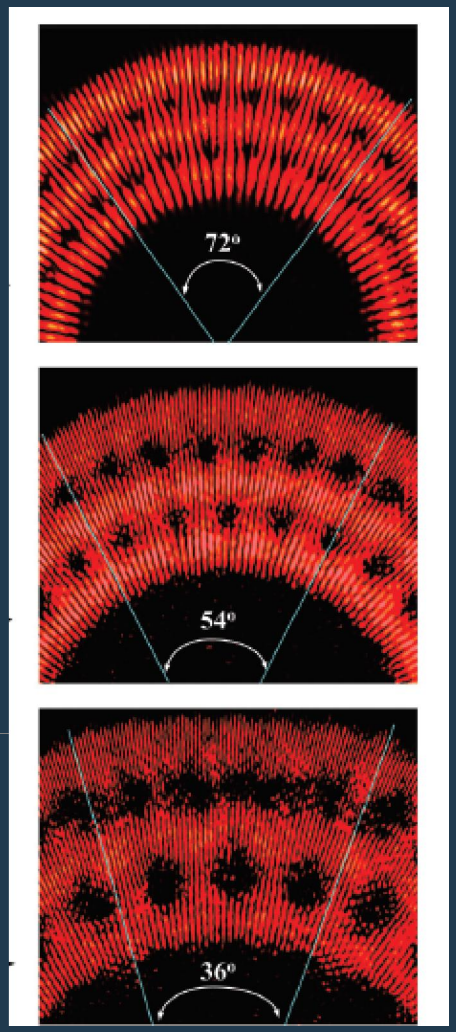

method 4: spiral phase contrast

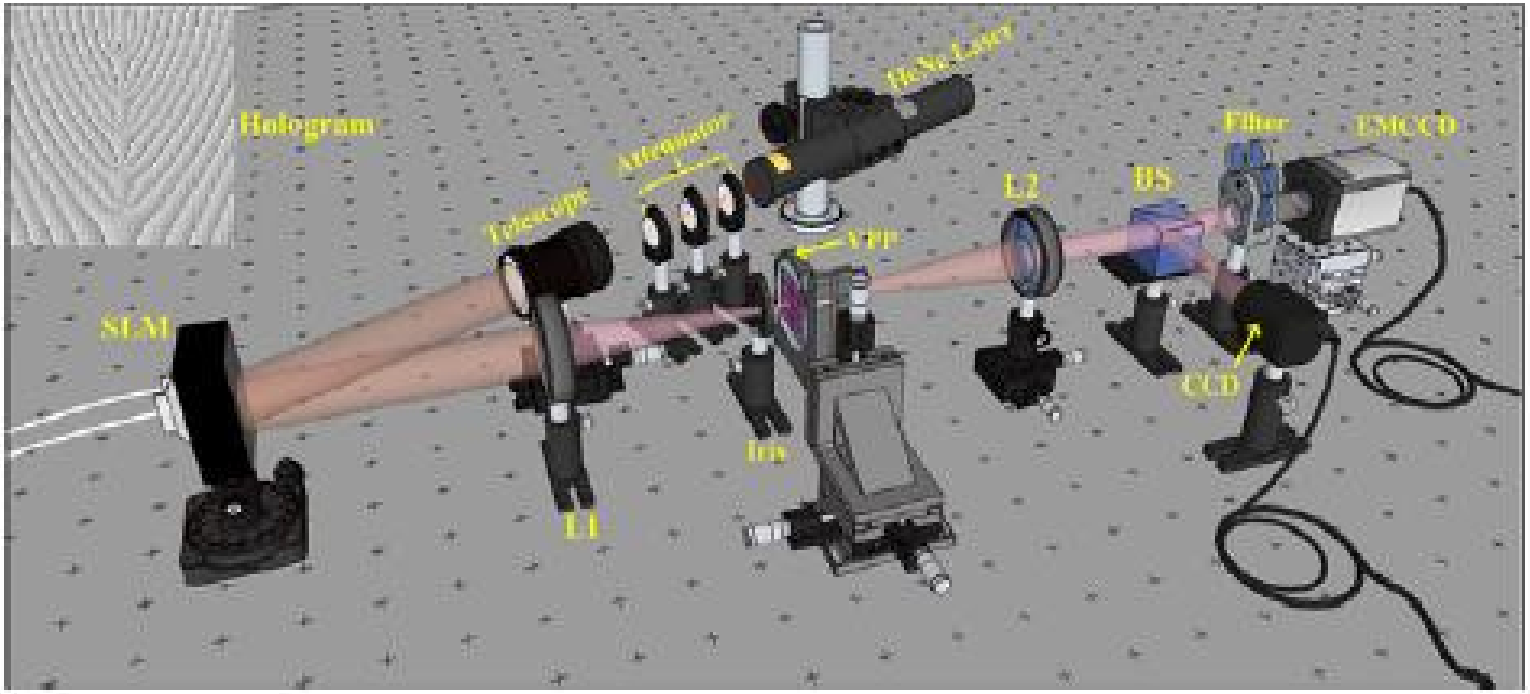

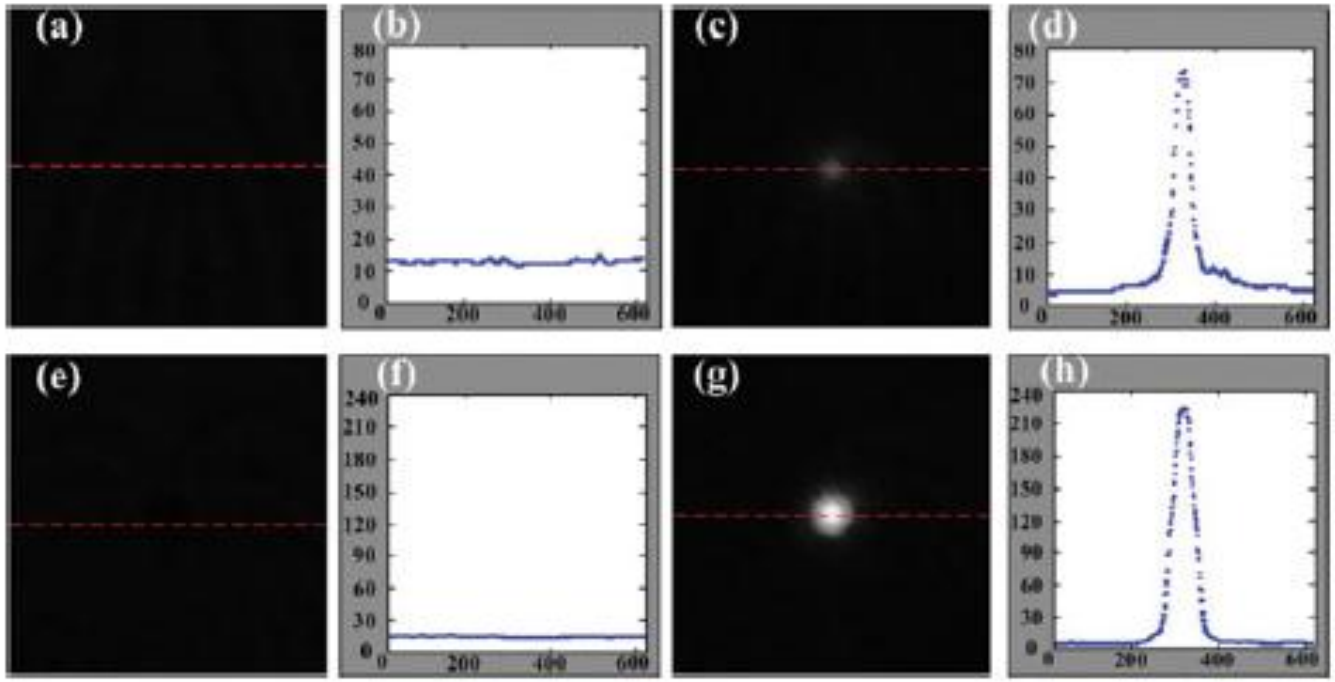

In d) and h) Q = 4 is brighter than Q = 1 where Q = -P and P is the topological charge

references

1. M. Padgett, J. Courtial, L. Allen, *Light's Orbital Angular Momentum,* Physics Today, May 2004 issue, pp. 35-40.
2. A. Ostrovsky, C. Rickenstorff-Parrao, V. Arrizon, *Generation of the "perfect" optical vortex using a liquid-crystal spatial light modulator,* Optics Letters, (38)2013, pp. 534-536.
3. W. Zhang, J. Wang, F. Li, L. Chen, E. Karimi, *Revealing Optical Vortices with a small number of photons,* Laser Photonics Review, (1)2017.
4. P. Panthong, S. Srisuphaphon, S. Chiangga, S. Deachapunya, *High-contrast optical vortex detection using the Talbot effect,* Applied Optics, (57)2018,pp. 1657-1661.
5. S. Zheng, J. Wang, *Measuring Orbital Angular Momentum (OAM) States of Vortex Beams with Annular Gratings,* Scientific Reports, 2017, pp.1-9.
6. V. Garbin, *Mie scattering distinguishes the topological charge of an optical vortex: a homage to Gustave Mie,* New J. Phys, (11)2009, 2-11.
7. L. Chen, W. Zhang, Q. Lu, X. Lin, *Making and Identifying optical superpositions of high orbital angular momenta,* Physical Review, (88)2013.