Plant Recommendation System on Agricultural Land Using Hierarchical Clustering Method

Putri Ayu Licha Wardani
Departement of Electrical Engineering
Politeknik Elektronika Negeri Surabaya
Surabaya, Indonesia
putriayu@te.student.pens.ac.id

Aries Pratiarto
Departement of Electrical Engineering
Politeknik Elektronika Negeri Surabaya
Surabaya, Indonesia
aries@pens.ac.id

Mochammad Zen Samsono
Departement of Electrical Engineering
Politeknik Elektronika Negeri Surabaya
Surabaya, Indonesia
zenhadi@pens.ac.id

***Abstract*— Farming is the majority of people's livelihood in Indonesia. planting suitable plants on agricultural land can increase farmers' yields. But the problem that exists today is planting plants that are not in accordance with land conditions. Thus, reducing the yield of farmers in Indonesia. Therefore, in this research, a plant recommendation system using the agglomerative hierarchical clustering method was made. This method is used to predict crops that are suitable for agricultural land. Utilizing Arduino Nano and Raspberry Pi Zero 2 W which is integrated with the 7-in-1 soil sensor to measure the parameters sought on agricultural land. the results show that the agglomerative hierarchical clustering method produces an average accuracy of 95% with an average error of 4.7% and utilizes Wi-Fi as communication.**

Keywords—*Crops, Recommendation Systems, Hierarchical Clustering*

I. Introduction

Indonesia is an agricultural country where most of its population work in the agricultural sector and their livelihoods depend on their livelihoods depend on agricultural land and has an important role in the economic sector in Indonesia. According to data from Central Bureau of Statistics (BPS) Indonesia in 2021, the rice harvest area reached around 10.41 million hectares with a production of 54.42 million tons of hectares with rice production of 54.42 million tons of GKG. Then in 2022, the rice harvest area produced was about 10.45 million hectares with a rice production of 54.75 million tons of MDG and increased by 0.61% compared to the production in 2021. Then in 2023, the area of rice harvested decreased to around 10.20 million hectares with rice paddy production of around 53.63 million tons of GKG [1],[2]. The decline in crop yields can occur due to several factors such as, weather, lack of nutrition, pests and diseases, over-application of chemical fertilizers. diseases, the application of chemical fertilizers that are too excessive, and most importantly the most importantly the agricultural techniques or cropping patterns that are used. The wrong cultivation system or planting pattern can cause a decrease in crop yields and crop failure. Planting pattern errors often occur when farmers are too insist on planting crops that are not in accordance with the soil conditions, resulting in the development cycle of the soil. soil conditions, resulting in a cycle of pest development pests increase and cause crop failure. The importance of checking soil conditions before planting with crops is very important to do so that with plants is very important to do in order to avoid crop failure. Therefore, a system is made that can be used by farmers by recommending crops that are suitable with soil conditions using the Hierarchical Clustering method. Also, a tool to analyse soil conditions which include soil moisture level, soil pH, conductivity, temperature and levels of nitrogen, phosphorus, potassium (NPK). The results of the soil recommendations will appear through the TFT LCD of the hardware device. In addition, it is equipped with GPS to provide mapping information and Wi-Fi as a data transmission medium. With this tool, it is expected to facilitate farmers in selecting crops according to the conditions and conditions and soil needs, so as to increase productivity and efficiency of agriculture and reduce crop failure significantly.

II. Related Works

Most articles discussing precision and smart agriculture focus on the use of different method to predict crops suitable for soil conditions based on available nutrient levels. Some of these articles are highlighted in this section to showcase the benefits that have been achieved, as well as areas that require improvement to further increase crop yields through the application of precision and smart agriculture technologies.

In [3], the main objective was to create a tool used to recommend crops based on the season using real-time data from DHT11 and BMP180 sensors. The parameters used include temperature, humidity, and air pressure. The system works by comparing seasonal conditions measured by the tool with actual conditions using the fuzzy logic method, and the results are displayed on a web server page. Another study [4] aims to present a plant selection system that is suitable for certain soils and develop a plant recommendation system. The system utilizes data from pH sensors, air humidity, temperature, soil moisture, and NPK sensors. The system works by measuring relevant soil characteristics and sending data in real-time to a cloud server. The methods used in this research are SVM (Support Vector Machine) and Decision Tree algorithms to determine plants that are

suitable for certain soil conditions. Meanwhile, [5] developed a system that predicts soil dataset categories based on analysis to determine crop yields, adds insight into the selection of crops suitable for certain soil types, and develops the best crop recommendation system for the selected area. The system uses various sensors, such as pH sensors, soil moisture, air temperature and humidity, and sunlight sensors. The collected information is processed using Naïve Bayes and SVM (Support Vector Machine) methods before being passed to the database. The output of the system is a prediction of the most effective type of crop to be planted by farmers.

From some of the previously described studies, various studies used different types of sensors, such as air temperature and humidity sensors, soil moisture sensors, pH sensors, NPK sensors, and others. In addition, the algorithms used in these studies are generally classification-based, such as SVM, Decision Tree, and Naïve Bayes. In the crop recommendation system to be developed, a 7-in-1 sensor is used that is capable of measuring 7 parameters at once: soil moisture, soil pH, temperature, conductivity, nitrogen (N), phosphorus (P), and potassium (K) levels. one sensor can present data from various parameters at once with the ability to read more complete soil parameters in one integrated system. The system will also use the Agglomerative Hierarchical Clustering (AHC) method, which is a hierarchy-based clustering method that forms groups of data from the bottom up. The system will transmit data in real-time, while allowing users to monitor measurement results and recommendations through hardware. Another advantage of the system is its flexibility to be applied to different soil types, as well as the ability to add parameters in the future without requiring relabelling of the dataset. With this approach, the system can provide crop recommendations that are more accurate and easily customized to farmers' needs.

III. Proposed System

In this section, the design of the proposed system to recommend crops based on soil conditions using the Agglomerative Hierarchical Clustering (AHC) method will be explained. The explanation includes system design, hardware and software architecture, system workflow (flowchart), algorithms applied, and formulas that support the clustering method to provide a comprehensive overview of the system work process.

A. Illustration System

The system created in this research is a system that can help farmers to monitor the condition of agricultural land including checking soil temperature, soil pH, nitrogen, phosphorus, potassium, soil moisture, and soil conductivity. Data from the results of monitoring soil conditions will then be processed to provide crop recommendations that are in accordance with the conditions of agricultural land.

Fig. 1 Illustration System

B. Implementation System

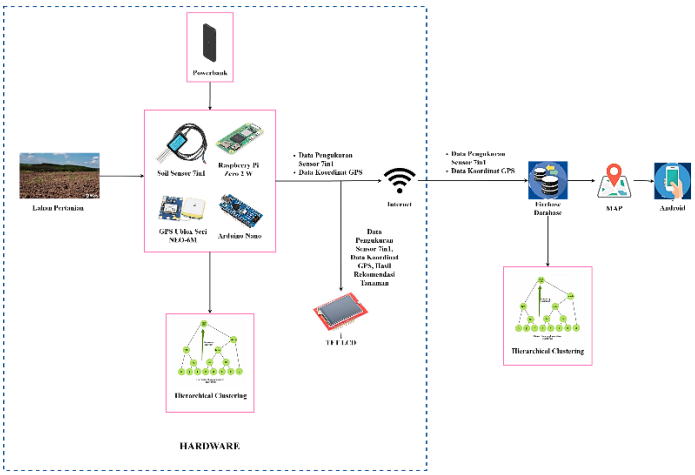

Fig. 2 Design System

In the system design above, the system will only be made in the hardware section. The working principle of this tool begins with data collection from agricultural land using the Arduino Nano and the 7-in-1 soil sensor. After that, the data that has been taken is sent to the Raspberry Pi Zero 2 W using serial communication (UART) with the help of a USB cable. The measurement data will be processed with various types of plants using the agglomerative hierarchical clustering method to produce recommendations on what plants are suitable for the land. There is a NEO 6M GPS that is used for mapping farmland locations, as well as a 2.4-inch TFT LCD that functions to display sensor measurement results, crop recommendation results, and GPS measurement results. Data transmission will be done using Wi-Fi to the database, the data sent is sensor measurement data and GPS measurement data.

C. Hierarchical Clustering

The hierarchical clustering method is a clustering technique that forms a hierarchy so that it forms a tree structure. in this study, the agglomerative hierarchical clustering method is used using a process that starts from the data of a group, then looks for potential groups based on distance to later join as a larger group, it continues to repeat so that it appears to move upwards to form a level (hierarchy)[6]. The equation used to calculate the distance between data in this study is using the cosine distance matrix formula [8], and the clustering method used is average linkage [7]. The calculation can be seen in the following equation:

Cosine Similarity:

$$cos(\theta) = \frac{A \cdot B}{\|A\|\|B\|} = \frac{\sum_{i=1}^{n} A_i B_i}{\sqrt{\sum_{i=1}^{n} A_i^2}\sqrt{\sum_{i=1}^{n} B_i^2}} \quad (1)$$

Average Linkage (*Average Distance*):

$$d_{uv} = \text{average}\{d_{uv}\}, d_{uv} \in D \quad (2)$$

D. Flowchart System

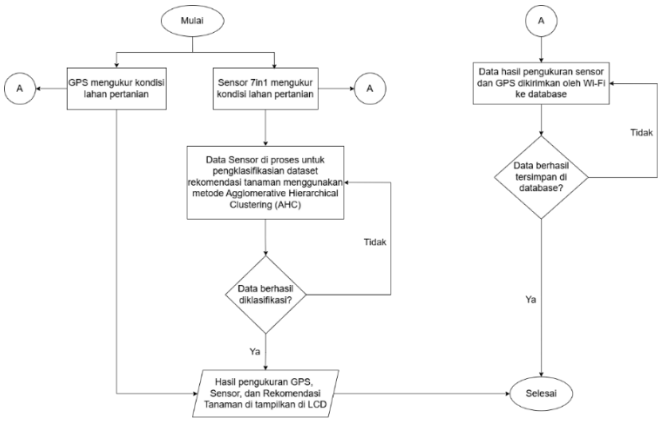

Fig. 3 Flowchart System

From the flowchart above, it starts with measuring data from the 7-in-1 sensor and GPS module. Then the sensor measurement data will be processed to classify the plant recommendation dataset using the agglomerative hierarchical clustering method. After the classification process is complete, the data from sensor measurements, location data from GPS, and plant recommendation results will be displayed on the LCD. Then, the 7-in-1 sensor measurement data and the previous GPS location will be sent to the database for storage and further analysis via Wi-Fi communication.

E. Hardware Design

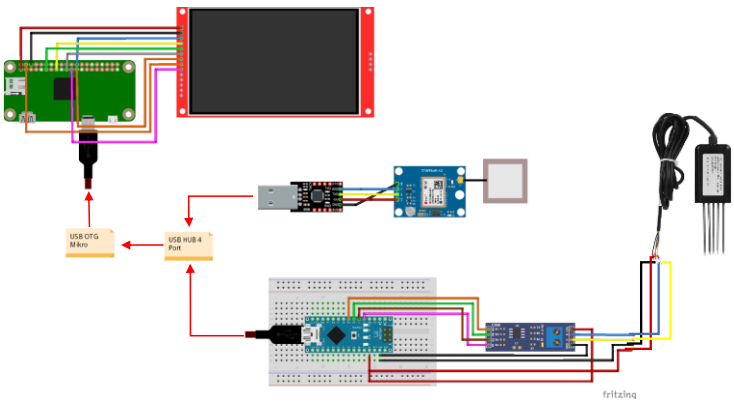

Fig. 4 Hardware System

Hardware design includes hardware schematics and design, as well as configuration between devices against their performance functions. The 7-in-1 soil sensor is connected to the RS-485 Modbus, which is connected to the Arduino Nano, then connected to the USB Hub as an external port of the Raspberry Pi Zero 2 W. The GPS module is connected to USB to TTL and connected to the USB Hub external port of the Raspberry Pi. Then the TFT LCD is directly connected to the Raspberry Pi Zero 2 W GPIO pin.

IV. Experimental Result

This section will explain the testing and analysis of the results of system tests that have been carried out.

A. Testing the Agglomerative Hierarchical Clustering Model

This test is carried out by inputting the original plant parameter values in the dataset. The dataset used this time is a dataset obtained from Kaggle. Information about this data is obtained from ICFA (Indian Chamber of Food and Agriculture) which is the highest body handling business agendas, policies and as a global platform for agribusiness technology and service facilities. The data consists of 2200 crop data with 8 types of soil content.

This agglomerative hierarchical clustering model uses the cosine distance matrix in equation (1) and the clustering method used is average linkage in equation (2), and cluster 5 as the selected cluster.

In the linkage clustering method used in the AHC model, a comparison between linkages is used using the Cophenetic Correlation Coefficient calculation for the selection of the most optimal linkage, by measuring the correlation between the distance in the dendrogram and the original distance in the data to assess suitability. It was found that average linkage has a higher value than other linkages of 0.945. Thus, average linkage was chosen as the main linkage in AHC modeling. The results of this comparison can be seen in Table 1.

Table 1. Linkage

Linkage	Coefficient Correlation Cophenetic
Single	0.888
Complete	0.895
Average	0.945
Ward	0.880

Cluster 5 was selected in the model as the optimal cluster used for this system. The determination of the number of clusters uses the Elbow method approach and the results show that cluster 5 is the optimal cluster point for the system with a value of 5283.211. The results of this Elbow method can be seen in Fig 5.

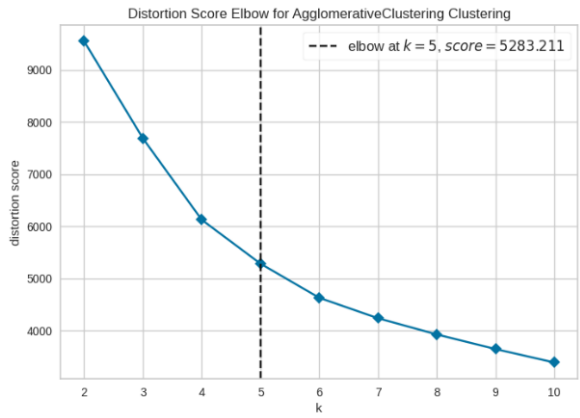

Fig. 5 Elbow Method

Then, the use of cosine as a distance matrix was also chosen based on the results of the comparison between each distance matrix, the results in Fig. 6 show that the distribution of data in cluster 5 is more optimal than the use of Euclidean and Manhattan distance matrices. So, from this comparison, the cosine matrix was chosen as the distance matrix in the AHC model.

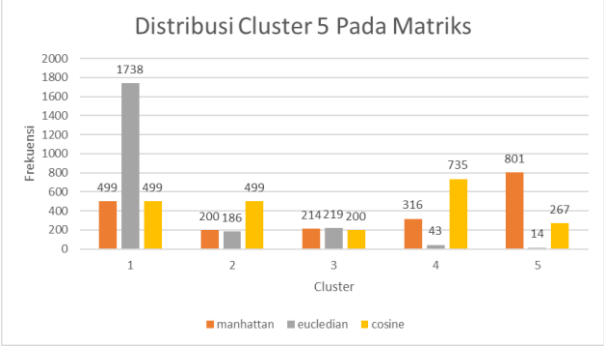

Fig. 6 Cluster Distribution on The Matrix

In testing the agglomerative hierarchical clustering model, data as much as 12, 22, 30, 50, 65, and 100 data is used to find out whether the error value produced by this model is getting higher as the amount of data increases. For the test results on the model, the data displayed in this paper is only data on testing 12, 65, and 100 data. The results can be seen in Table 2 to Table 4 below.

Table 2. 12 Test Data

No	N	P	K	Temp	Humd	pH	Label	Predict
1	67	42	38	24.9	82.1	6.8	Padi	Rami
2	103	26	33	24.6	50.5	7.1	Kopi	Kopi
3	112	44	25	25.7	77.9	7.6	Kapas	Kapas
4	49	51	53	32.6	93.6	6.9	Pepaya	Pepaya
5	32	6	31	29.2	93.3	5.8	Kelapa	Kelapa
6	93	26	52	24.5	81.3	6.1	Semangka	Semangka
7	42	73	22	34	62.3	6.5	Kacang Hitam	Kacang Hitam
8	39	51	20	28.7	61.2	7.7	Kacang Gude	Kacang Gude
9	27	79	24	21	43.3	5.6	Kacang Kapri	Kacang Kapri
10	16	60	21	17.6	23.6	5.63	Kacang Merah	Kacang Merah
11	78	37	15	25.3	67.8	6.3	Jagung	Jagung
12	40	25	42	20	94.6	6.4	Delima	Delima

Table 3. 65 Test Data

No	N	P	K	Temp	Humd	pH	Label	Predict
1	67	42	38	24.9	82.1	6.8	Padi	Rami
2	103	26	33	24.6	50.5	7.1	Kopi	Kopi
3	112	44	25	25.7	77.9	7.6	Kapas	Kapas
4	49	51	53	32.6	93.6	6.9	Pepaya	Pepaya
5	32	6	31	29.2	93.3	5.8	Kelapa	Kelapa
6	93	26	52	24.5	81.3	6.1	Semangka	Semangka
7	42	73	22	34	62.3	6.5	Kacang Hitam	Kacang Hitam
8	39	51	20	28.7	61.2	7.7	Kacang Gude	Kacang Gude
9	27	79	24	21	43.3	5.6	Kacang Kapri	Kacang Kapri
10	16	60	21	17.6	23.6	5.63	Kacang Merah	Kacang Merah
11	78	37	15	25.3	67.8	6.3	Jagung	Jagung
12	40	25	42	20	94.6	6.4	Delima	Delima
13	86	73	45	26.4	82.7	6	Pisang	Pisang
14	15	16	28	34	51	4.5	Mangga	Mangga
15	111	15	47	30	91.5	6.1	Melon	Melon
16	13	9	8	11.5	93.12	8	Jeruk	Jeruk
17	73	35	37	24	74	6.2	Rami	Rami
18	28	56	25	18.2	62	7	Lentil	Lentil
19	7	47	25	30	83	6.4	Kacang Hijau	Kacang Hijau
20	27	60	78	19.4	14.2	6.1	Kacang Arab	Kacang Arab
21	32	142	204	31.3	83.4	6	Anggur	Anggur
22	6	136	200	22.8	94	5.6	Apel	Apel
23	17	69	17	17.3	25	6	Kacang Merah	Kacang Merah
24	53	65	85	18.8	16.4	7.8	Kacang Arab	Kacang Arab
25	92	52	16	18.8	59	6	Jagung	Jagung
26	62	45	36	25.6	82	5.5	Padi	Padi
27	32	61	15	19.4	63.4	8	Lentil	Lentil
28	14	9	43	23	88.8	6.1	Delima	Delima
29	100	76	49	27.6	75.9	5.5	Pisang	Pisang
30	86	10	47	25.5	84	7	Semangka	Semangka
31	115	25	52	28	93	6.6	Melon	Melon
32	15	7	8	22.7	90	6.4	Jeruk	Jeruk
33	32	46	52	23	92	6.8	Papaya	Papaya
34	34	6	32	27	90	6	Kelapa	Kelapa
35	107	60	22	23	83.5	7	Kapas	Kapas
36	70	43	38	25	70.8	7.2	Rami	Rami
37	83	24	28	25.6	51	6.8	Kopi	Kopi
38	7	128	197	23.8	90	5.5	Apel	Apel
39	18	19	31	34.1	50.6	6.4	Mangga	Mangga
40	10	61	17	27.7	67	6.1	Lentil	Lentil
41	17	40	20	27.5	81	6.2	Kacang Hijau	Kacang Hijau
42	20	72	22	32.4	67	6.8	Kacang Hitam	Kacang Hitam
43	22	47	15	28.3	49	9	Kacang Gude	Kacang Gude
44	32	75	20	31	46.2	7	Kacang Kapri	Kacang Kapri
45	37	69	16	23.4	19	6	Kacang Merah	Kacang Merah
46	44	69	78	20	20	6.7	Kacang Arab	Kacang Arab
47	90	53	38	26.5	83.3	6	Padi	Padi
48	19	139	195	19	81.6	6	Anggur	Anggur
49	16	11	35	29.7	96.6	6	Kelapa	Kelapa
50	81	55	39	26.8	79	7	Rami	Rami
51	99	33	33	27.6	61	6.2	Kopi	Kopi
52	16	5	9	23.8	90	7.4	Jeruk	Jeruk
53	36	140	196	22	90	6.4	Apel	Apel
54	102	25	54	29.2	90.2	6	Melon	Melon
55	83	18	47	25.3	84	6.1	Semangka	Semangka
56	60	39	42	23.8	81	6	Padi	Padi
57	11	59	20	22	18.8	5.5	Kacang Merah	Kacang Merah
58	53	60	17	34.8	63.5	7.2	Kacang Hitam	Kacang Hitam
59	85	79	49	25	78.3	6.2	Pisang	Pisang
60	27	21	35	25.3	93.2	5.5	Kelapa	Kelapa
61	104	32	30	24.1	52	7.4	Kopi	Kopi
62	88	50	43	25	82	7	Rami	Padi
63	126	53	15	24.4	81.6	7.9	Kapas	Kapas
64	68	5	52	40	94.3	6.8	Papaya	Papaya
65	71	60	45	23.4	82	7.7	Padi	Rami

Table 4. 100 Test Data

No	N	P	K	Temp	Humd	pH	Label	Predict
1	67	42	38	24.9	82.1	6.8	Padi	Rami
2	103	26	33	24.6	50.5	7.1	Kopi	Kopi
3	112	44	25	25.7	77.9	7.6	Kapas	Kapas
4	49	51	53	32.6	93.6	6.9	Pepaya	Pepaya
5	32	6	31	29.2	93.3	5.8	Kelapa	Kelapa
6	93	26	52	24.5	81.3	6.1	Semangka	Semangka
7	42	73	22	34	62.3	6.5	Kacang Hitam	Kacang Hitam
8	39	51	20	28.7	61.2	7.7	Kacang Gude	Kacang Gude
9	27	79	24	21	43.3	5.6	Kacang Kapri	Kacang Kapri
10	16	60	21	17.6	23.6	5.63	Kacang Merah	Kacang Merah
11	78	37	15	25.3	67.8	6.3	Jagung	Jagung
12	40	25	42	20	94.6	6.4	Delima	Delima
13	86	73	45	26.4	82.7	6	Pisang	Pisang
14	15	16	28	34	51	4.5	Mangga	Mangga
15	111	15	47	30	91.5	6.1	Melon	Melon

No	N	P	K	Temp	Humd	pH	Label	Predict
16	13	9	8	11.5	93.12	8	Jeruk	Jeruk
17	73	35	37	24	74	6.2	Rami	Rami
18	28	56	25	18.2	62	7	Lentil	Lentil
19	7	47	25	30	83	6.4	Kacang Hijau	Kacang Hijau
20	27	60	78	19.4	14.2	6.1	Kacang Arab	Kacang Arab
21	32	142	204	31.3	83.4	6	Anggur	Anggur
22	6	136	200	22.8	94	5.6	Apel	Apel
23	17	69	17	17.3	25	6	Kacang Merah	Kacang Merah
24	53	65	85	18.8	16.4	7.8	Kacang Arab	Kacang Arab
25	92	52	16	18.8	59	6	Jagung	Jagung
26	62	45	36	25.6	82	5.5	Padi	Padi
27	32	61	15	19.4	63.4	8	Lentil	Lentil
28	14	9	43	23	88.8	6.1	Delima	Delima
29	100	76	49	27.6	75.9	5.5	Pisang	Pisang
30	86	10	47	25.5	84	7	Semangka	Semangka
31	115	25	52	28	93	6.6	Melon	Melon
32	15	7	8	22.7	90	6.4	Jeruk	Jeruk
33	32	46	52	23	92	6.8	Papaya	Papaya
34	34	6	32	27	90	6	Kelapa	Kelapa
35	107	60	22	23	83.5	7	Kapas	Kapas
36	70	43	38	25	70.8	7.2	Rami	Rami
37	83	24	28	25.6	51	6.8	Kopi	Kopi
38	7	128	197	23.8	90	5.5	Apel	Apel
39	18	19	31	34.1	50.6	6.4	Mangga	Mangga
40	10	61	17	27.7	67	6.1	Lentil	Lentil
41	17	40	20	27.5	81	6.2	Kacang Hijau	Kacang Hijau
42	20	72	22	32.4	67	6.8	Kacang Hitam	Kacang Hitam
43	22	47	15	28.3	49	9	Kacang Gude	Kacang Gude
44	32	75	20	31	46.2	7	Kacang Kapri	Kacang Kapri
45	37	69	16	23.4	19	6	Kacang Merah	Kacang Merah
46	44	69	78	20	20	6.7	Kacang Arab	Kacang Arab
47	90	53	38	26.5	83.3	6	Padi	Padi
48	19	139	195	19	81.6	6	Anggur	Anggur
49	16	11	35	29.7	96.6	6	Kelapa	Kelapa
50	81	55	39	26.8	79	7	Rami	Rami
51	99	33	33	27.6	61	6.2	Kopi	Kopi
52	16	5	9	23.8	90	7.4	Jeruk	Jeruk
53	36	140	196	22	90	6.4	Apel	Apel
54	102	25	54	29.2	90.2	6	Melon	Melon
55	83	18	47	25.3	84	6.1	Semangka	Semangka
56	60	39	42	23.8	81	6	Padi	Padi
57	11	59	20	22	18.8	5.5	Kacang Merah	Kacang Merah
58	53	60	17	34.8	63.5	7.2	Kacang Hitam	Kacang Hitam
59	85	79	49	25	78.3	6.2	Pisang	Pisang
60	27	21	35	25.3	93.2	5.5	Kelapa	Kelapa
61	104	32	30	24.1	52	7.4	Kopi	Kopi
62	88	50	43	25	82	7	Rami	Padi
63	126	53	15	24.4	81.6	7.9	Kapas	Kapas
64	68	5	52	40	94.3	6.8	Papaya	Papaya
65	71	60	45	23.4	82	7.7	Padi	Rami
66	28	17	34	31	48	6.2	Mangga	Mangga
67	105	94	45	25	78.7	5.7	Pisang	Pisang
68	33	28	35	18	90	7	Delima	Delima
69	40	69	22	21	63.1	6	Lentil	Lentil
70	23	45	23	28.1	87	7	Kacang Hijau	Kacang Hijau
71	40	36	17	30.3	53.7	7.1	Kacang Gude	Kacang Gude
72	7	64	19	22.4	50.5	5.6	Kacang Kapri	Kacang Kapri
73	84	43	44	26.9	84.1	5.1	Padi	Padi
74	55	80	15	25.5	69.9	7.7	Kacang Hitam	Kacang Hitam
75	67	48	23	26	59.3	6.1	Jagung	Jagung
76	95	36	43	23.4	83.8	5.5	Padi	Padi
77	94	31	35	26.3	53.3	6	Kopi	Kopi
78	64	50	37	23.7	71.2	6.8	Rami	Jagung
79	100	44	17	22.7	77.7	7.9	Kapas	Kapas
80	8	9	29	27.8	94.3	5.7	Kelapa	Kelapa
81	31	47	45	42.9	90	6.9	Papaya	Papaya
82	40	8	9	27.6	94.4	7.8	Jeruk	Jeruk
83	31	144	197	22.3	90.8	5.7	Apel	Apel
84	84	9	45	28.2	90.3	6.7	Melon	Melon
85	110	7	51	26.7	85.5	6.9	Semangka	Semangka
86	33	130	205	34.3	82.2	5.5	Anggur	Anggur
87	23	36	35	27.5	47.4	4.7	Mangga	Mangga
88	95	85	55	27.3	78.5	6.2	Pisang	Pisang
89	40	25	45	22.6	89.2	5.7	Delima	Delima
90	23	79	24	28	69.5	7.3	Lentil	Kacang Hitam
91	56	61	15	28.2	64.2	7	Kacang Hitam	Kacang Hitam
92	38	56	22	28	84.8	6.5	Kacang Hijau	Kacang Hijau
93	11	41	22	29.9	63	9.4	Kacang Gude	Kacang Gude
94	13	7	5	10.3	90.5	7.7	Jeruk	Jeruk
95	20	67	20	19.3	20.8	5.6	Kacang Merah	Kacang Merah
96	26	78	77	20.8	16	7.7	Kacang Arab	Kacang Arab
97	78	60	15	25.3	63.3	6.5	Jagung	Jagung
98	67	43	39	22	81.4	5.1	Padi	Padi
99	14	140	197	22	90.6	6	Apel	Apel
100	23	74	17	20	62.3	7.5	Lentil	Lentil

Calculation of model accuracy and error can be calculated using the equation below:

$$Accuracy = \left(\frac{Number\ of\ Correct\ Prediction}{Data\ Total}\right) \times 100 \quad (3)$$

$$Error(\%) = 100 - Accuracy \quad (4)$$

Table 5. AHC Model Accuracy and Error

AHC Model Accuracy and Error					
No	**Data Total**	**Correct Prediction**	**Wrong Prediction**	**Accuracy (%)**	**Error (%)**
1	12	11	1	91.6	8.4
2	22	21	1	95.6	4.6
3	30	29	1	96.6	3.4
4	50	49	1	98	2
5	65	62	3	95.3	4.7
6	100	95	5	95	5
Average Accuracy & Error				95	4.7

From these calculations, the results of accuracy and error in the AHC model in Table 5 It is known that in the use of 12 data to 50 data there is only one wrong prediction, without the addition of further errors. This causes the error value to decrease as the amount of data increases. Then at 65 data there are 3 wrong predictions with an error of 4.7% and at 100 data an error value of 5% is obtained. Overall, from all the data used, ranging from 12 data to 100 data, the average error value generated from this AHC model is 4.7% and the average accuracy is 95%.

B. Soil Sensor 7-in-1 Testing

This test scenario is carried out using 2 different soil conditions, namely wet soil, and dry soil with the aim of evaluating the consistency and response of the sensor in reading. It was found that, in Table 6 dry soil, the average standard deviation obtained was 0.41, and in Table 7 wet soil was 0.52. the calculation of the standard deviation can use the following equation, with information: μ is average ; σ is deviation standard ; x_i is i data value ; n is amount of data.

$$\sigma = \sqrt{\frac{\sum(x_i - \mu)^2}{n}} \quad (5)$$

Table 6. Measurement on Dry Soil

No	Soil Moisture	Temperature	Conductivity	pH	N	P	K
1	18.6	30.8	191	7.8	1	49	41
2	18.1	30.8	191	7.9	1	49	41
3	18.7	30.6	191	7.9	1	49	41
4	18.5	30.7	191	7.9	1	49	41
5	18.3	30.6	191	7.9	1	49	41
6	18.7	30.7	191	8	1	49	41
7	18.6	30.6	191	8.1	1	49	41
8	18.9	30.5	191	8.1	1	49	41

Table 7. Measurement on Wet Soil

No	Soil Moisture	Temperature	Conductivity	pH	N	P	K
1	44.3	29.8	537	7.2	73	216	209
2	43.9	29.8	536	7.4	73	215	209
3	45.2	29.9	538	7.6	73	216	210
4	45	29.9	538	7.7	73	216	210
5	45	29.8	534	7.8	73	214	208
6	41	30	538	7.9	73	216	210
7	45.3	29.9	537	8.3	73	216	209
8	45.9	29.7	537	8.4	73	216	209

C. *GPS Testing*

GPS testing is carried out to measure the difference in the distance points generated by the device and the actual distance from Google Maps. The results obtained in Table 8 show that the average value of the error distance that occurs is 4.18 meters.

Table 8. GPS Location

Location	Detection		Actual		Different Distance (m)
	Longitude	Latitude	Longitude	Latitude	
Dropped Point Sambisari Rt 32	-7.365747	112.678061	-7.365686	112.678056	6.81
Jl. Kecipik, Masangan	-7.378297	112.683716	-7.378299	112.683719	0.39
Jl. Raya Sukodono No.27	-7.399825	112.673079	-7.399798	112.67305	4.38
Lapangan Pademonegoro, Sukodono	-7.402664	112.659758	-7.402612	112.659834	10
Lapangan Ngaresrej, Sukodono	-7.391175	112.644457	-7.391162	112.644473	2.28
Lapangan Kelurahan Ngelom, Ngelom, Taman	-7.348064	112.689821	-7.348062	112.689826	0.59
Tanah Lapang, dekat Masjid SablilillahSambisari	-7.365188	112.676183	-7.365164	112.676172	2.93
Lapangan Balai Desa Sambibulu	-7.368145	112.667054	-7.368150	112.666981	8
Lapangan Sepak Bola Sambibulu FC	-7.376955	112.659834	-7.376950	112.659806	3.13
Area Sawah Bangsri	-7.386383	112.665039	-7.386382	112.665009	3.31

D. *Integration System Testing*

This test is carried out to find out whether the hardware can work according to the designed system. Testing is done by using the hardware directly. Measurement data from the 7-in-1 soil sensor and GPS coordinates will be displayed on the LCD and sent to the database via Wi-Fi communication. The following are the results of real-time data collection along with the results of plant recommendations using the agglomerative hierarchical clustering method in Table 9.

Table 9. Crop Recommendation Result Using Realtime Data

N	P	K	Temperature	Humidity	pH	Conductivity	Recommendation	Computation Time (s)
127	339	334	28.3	62.6	9	793	Anggur	2.109
21	96	89	27.4	29.1	7.7	289	Kacang Arab	2.118
5	58	50	27.5	20.5	9	209	Kacang Gude	2.112
35	127	120	28.9	27.5	8.9	354	Kacang Arab	2.109
46	154	147	32.8	48	9	408	Lentil	2.113
6	45	38	28.3	12.7	6.4	184	Kacang Kapri	2.111
208	527	523	30.2	53	6.8	1182	Anggur	2.110

From the above results, the crop recommendation system has a fairly good performance in recommending plants based on the selected land with an average computation time of 2,110 seconds. Parameter measurements using the 7-in-1 sensor and GPS coordinate points will previously be sent to the database using a Wi-Fi connection. In addition, the measurement results of the 7-in-1 sensor, GPS coordinates, and plant recommendations will be displayed on the hardware LCD.

(a) (b)

Fig. 7 (a) GPS Coordinate (b) Send Data to Database

E. *Testing Communication System and Wi-Fi Connection*

This test is conducted to measure the extent to which the Wi-Fi network connection can send data to the database. HP OPPO A77S hotspot is used with internet power of 2.4 GHz with testing distances ranging from 10 meters to 100 meters. The results showed that the HP hotspot has an effective range of about 50 meters, with the maximum range of the internet at 70 meters. At a maximum distance of 70 meters, the Wi-Fi connection can still send data to the database, but if it is more than that distance, there is a possibility of no connection and transmission will be disrupted because it is outside the maximum distance.

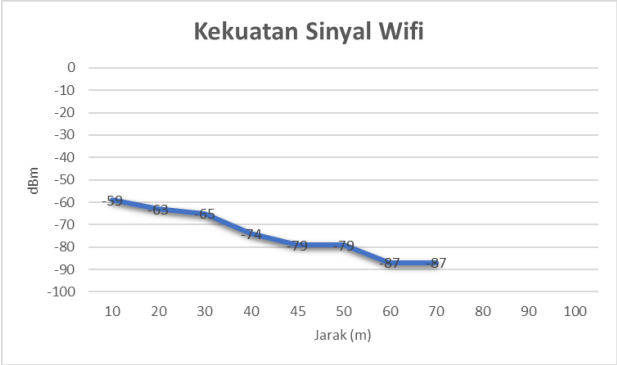

Fig. 8 Wi-Fi Signal Strength Against Distance

V. Conclusion

The decline in farmers' yields that occurs is caused by several factors such as weather, pests and diseases, lack of nutrients in plants, and agricultural techniques or planting patterns carried out by farmers. Planting inappropriate plants on agricultural land can cause a decrease in crop yields, or even crop failure. This crop recommendation system on agricultural land using the agglomerative hierarchical clustering method can help the problem. This system can assist farmers in selecting crops that are suitable for agricultural land conditions, using the 7-in-1 soil sensor as a tool for monitoring soil conditions with 7 measurement parameters such as soil moisture, soil pH, temperature, conductivity, nitrogen, phosphorus, and potassium. Also, the use of GPS (Global Positioning System) module as a monitoring point - location point on agricultural land.

This proposed system is a monitoring tool that has an accuracy for the AHC model of 95% with an error of 4.7%, can measure different soil conditions with an average standard deviation of 0.4 to 0.6. Data transmission to the database using Wi-Fi with a maximum distance of 70 meters, and measurement of GPS coordinate points with an average error of 4.18 meters. The 7-in-1 sensor measurement output on agricultural land, crop recommendation results, and GPS coordinates will be displayed on the LCD to make it easier for users to see directly the results obtained from land measurements.

VI. Future Work

Suggestions that can be made on this research are:

1. Perform calibration so that the soil 7-in-1 sensor can produce better performance and precision in taking measurements.
2. Using other datasets or datasets of independent measurement results.
3. Trying to use other classification methods to recommend plants.
4. Trying to make Raspberry Pi Zero 2 W can switch connections automatically without the need to access the Raspberry Pi operating system when moving to another internet connection.
5. Send data in a place with minimal obstructions, or add an access point when sending data over a longer distance.

References

[1] Badan Pusat Statistik, "Luas Panen Dan Produksi Padi Di Indonesia 2022," *Badan Pusat Statistik*, [Online]. Available :https://www.bps.go.id/id/pressrelease/2023/03/01/2036/pada-2022--luas-panen-padi-mencapai-sekitar-10-45-juta-hektar-dengan-produksi-sebesar-54-75-juta-ton-gkg-.html [Accessed 18 Desember 2023].

[2] Badan Pusat Statistik "Luas Panen Dan Produksi Padi Di Indonesia 2023," *Badan Pusat Statistik*, [Online]. Available :https://www.bps.go.id/id/pressrelease/2023/10/16/2037/luas-panen-dan-produksi-padi-di-indonesia-2023--angka-sementara-.html [Accessed 18 Desember 2023].

[3] K. P. Moch. Yanuariadin, N. Kumalasari R., dan F. Intan N., "Sistem Rekomendasi Tanaman Pertanian Berbasis IOT, " *Seminar Teknologi Terapan*, UN PGRI Kediri, 25 Juli 2023.

[4] R. Reshma, V. Sathiyavathi, T. Sindhu, K. Selvakumar, L. SaiRamesh, "IoT based Classification Techniques for Soil Conten Analysis and Crop Yield Prediction," *Proceedings of the Fourth International Conference on (I-SMAC)*, IEEE, 2020.

[5] B. Pradeepa, W. Thilini, H. Ruchirawya T., W. J. M. Nanayakkara, C. Dimantha M. A., P. Pabasara M. G., "Crop Recommendation System," *International Journal of Computer Applications (0975 – 8887)*, vol. 175, no. 22, October 2020.

[6] Y. Dessy I., H. Teguh I., D. Meriska, "Analisis Cluster Donor Darah dengan Metode Agglomerative Hierarchical Clustering," *RESOLUSI : Rekayasa Teknik Informatika dan Informasi*, vol. 3, no. 6, hal. 432-441, Juli 2023.

[7] H. Pratama R., F. Tresna M., D. Natalia, "GIS implementation and classterization of potential blood donors using the agglomerative hierarchical clustering method," *IJEEIT (International Journal of Electrical Engineering and Information Technology*, vol. 3, no. 3, September 2020.

[8] A. Fatima, A. Iman, A. Sumayya, S. Khaled, dan S. A. Said, "A Recommendation System for Diabetes Detection and Treatment," Conference Paper, November 2020, DOI: 10.1109/CCCI49893.2020.9256676.