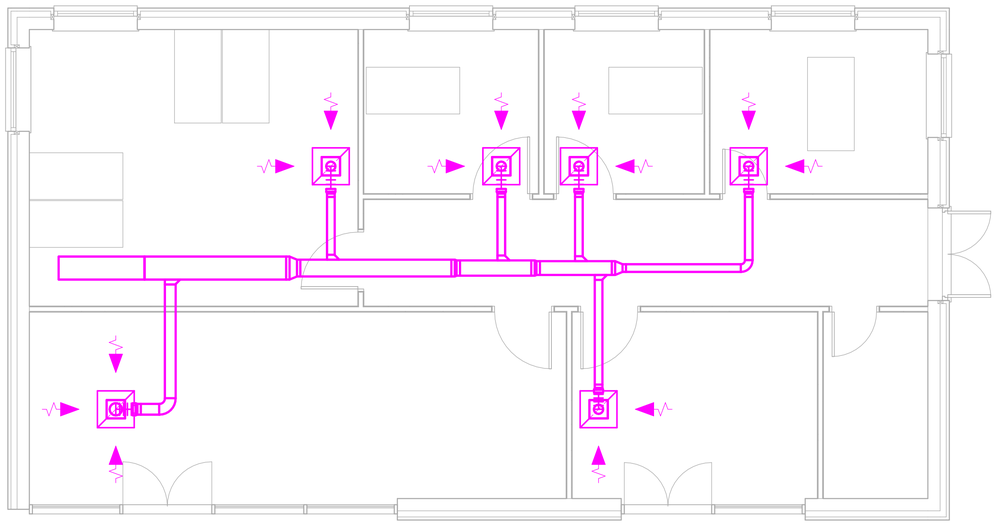

1 0 - Return System

1 : 50

Return Duct Schedule				
Family and Type	Height	Width	Length	Flow
Rectangular Duct: Flanged Radius Bend / Shoe Branch	300	375	2307	560.0 L/s
Rectangular Duct: Flanged Radius Bend / Shoe Branch	300	375	1397	560.0 L/s
Rectangular Duct: Flanged Radius Bend / Shoe Branch	300	275	2463	400.0 L/s
Rectangular Duct: Flanged Radius Bend / Shoe Branch	275	250	1163	320.0 L/s
Rectangular Duct: Flanged Radius Bend / Shoe Branch	225	225	1172	240.0 L/s
Rectangular Duct: Flanged Radius Bend / Shoe Branch	200	175	1855	160.0 L/s
Rectangular Duct: Flanged Radius Bend / Shoe Branch	200	175	300	160.0 L/s
Rectangular Duct: Flanged Radius Bend / Shoe Branch	140	125	1872	80.0 L/s
Rectangular Duct: Flanged Radius Bend / Shoe Branch	140	125	1708	80.0 L/s
Rectangular Duct: Flanged Radius Bend / Shoe Branch	140	125	1030	80.0 L/s
Rectangular Duct: Flanged Radius Bend / Shoe Branch	140	125	968	80.0 L/s
Rectangular Duct: Flanged Radius Bend / Shoe Branch	140	125	955	80.0 L/s
Rectangular Duct: Flanged Radius Bend / Shoe Branch	140	125	943	80.0 L/s

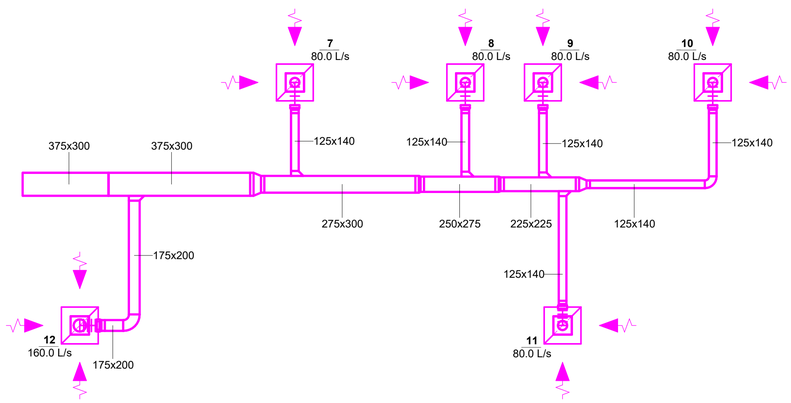

2 0 - Return System Parts

1 : 50

Return Duct Fitting Schedule		
Family and Type	Size	Count
Rectangular Union: Standard	375x300-375x300	1
Rectangular Shoe Branch - Flanged: Standard	175x200-175x200	1
Rectangular Shoe Branch - Flanged: Standard	125x140-125x140	4
Rectangular Medium Radius Bend - Flanged: Standard	175x200-175x200	1
Rectangular Medium Radius Bend - Flanged: Standard	125x140-125x140	1
Rectangular Concentric Taper - Flanged: Standard	375x300-275x300	1
Rectangular Concentric Taper - Flanged: Standard	275x300-250x275	1
Rectangular Concentric Taper - Flanged: Standard	250x275-225x225	1
Rectangular Concentric Taper - Flanged: Standard	225x225-125x140	1
Rectangular - Round Transformation - Flanged: Standard	300x300-200ø	1
Rectangular - Round Transformation - Flanged: Standard	300x300-150ø	5
Rectangular - Round Transformation - Flanged: Standard	175x200-200ø	1
Rectangular - Round Transformation - Flanged: Standard	150ø-125x140	5

TUS
Technological University of the Shannon: Midlands Midwest
Ollscoil Teicneolaíochta na Sionainne: Lár Tíre Iarthar Láir

Revit MEP
Spring 2022

Rev	Description	Date

CODE	SUITABILITY DESCRIPTION
A1	Construction
STATUS	PURPOSE OF ISSUE

Educational Exercise
NOT FOR CONSTRUCTION

PROJECT
Revit MEP

TITLE
Return System

CLIENT
Owner

DRAWN BY	CHECKED BY	DATE
Author	Checker	10/20/20

SCALE (@ A1)	PROJECT NUMBER
1 : 50	RMEP02

DRAWING NUMBER	REV
H-103	

10/01/2022 20:03:47