UC Constrained DC System Optimization

Due to the simplicity and generality of the models, symbolic descriptions are omitted.

Mathematical Models

1) Obj

The objective function is to minimize costs, including the coal consumption costs caused by power generation and the start-up and shutdown costs of the generators.

$$\min \sum_{i=1}^{N}\left(\sum_{t=1}^{T} C_i^f\left(P_{i,t}\right)+C_i^U+C_i^D\right) \tag{1}$$

$$C_i\left(P_{i,t}\right)=a_i P_{i,t}^2+b_i P_{i,t}+c_i \tag{2}$$

2) Power balance constraints, sole equality constraint

$$\sum_{i=1}^{N} P_{i,t}=\sum_{i=1}^{N_L} P_{d,t} \tag{3}$$

3) Inequality constraints

a) Hot reserve

$$\sum_{i=1}^{N}\left(u_{i,t} P_{i,\max}-P_{i,t}\right) \geq \rho \sum_{i=1}^{N_L} p_{d,t} \tag{4}$$

b) Generators output constraints

$$u_{i,t} P_{i,\min} \leq P_i \leq u_{i,t} P_{i,\max} \tag{5}$$

c) Generators climbing rates constraints

$$-R_d \leq P_{i,t}-P_{i,t\text{-}1} \leq R_u \tag{6}$$

d) Generators startup and shutdown time constraints

$$\sum_{k=t}^{t+TS-1}\left(1-u_{i,k}\right) \geq TS\left(u_{i,t-1}-u_{i,t}\right) \tag{7}$$

$$\sum_{k=t}^{t+TO-1} u_{i,k} \geq TO\left(u_{i,t}-u_{i,t-1}\right) \tag{8}$$

e) Generators startup and shutdown costs constraints

$$\begin{cases} C_{i,t}^U \geq H_i\left(u_{i,t}-u_{i,t-1}\right) \\ C_{i,t}^U \geq 0 \end{cases} \tag{9}$$

$$\begin{cases} C_{i,t}^D \geq J_i\left(u_{i,t-1}-u_{i,t}\right) \\ C_{i,t}^D \geq 0 \end{cases} \tag{10}$$

f) System branch capacity constraints

$$P_{l,\min} \leq P_{l,\mathrm{t}} \leq P_{l,\max} \tag{11}$$

4) Explanation

When the minimum output of the generators is greater than the ramp rate, constraint **(6)** will prevent all units from starting, so it can be rewritten as

$$P_{i,t} - P_{i,t-1} \le u_{i,t-1}\left(R_u - S_{i,u}\right) + S_{i,u} \tag{12}$$

$$P_{i,t-1} - P_{i,t} \le u_{i,t}\left(R_d - S_{i,d}\right) + S_{i,d} \tag{13}$$

The maximum rates can be set as

$$S_{i,u} = S_{i,d} = \frac{1}{2}\left(P_{i,\min} + P_{i,\max}\right) \tag{14}$$

Calculate the Power Transfer Distribution Factor (PTDF) matrix G of the power flow, constraint **(6)** can be rewritten as:

$$P_{l,\min} \le \sum_{i=1}^{N} G_{l-i} P_{i,t} - \sum_{j=1}^{N_L} G_{l-j} P_{d,t} \le P_{l,\max} \tag{15}$$

where G describes the impact of the injected power of node i on line l.

Case study

The case study is based on the standard IEEE-30 bus test system. The system diagram is shown in Figure 1. The system contains 30 buses and 6 generators. It is required to determine the optimal UC of the system so that the total operating cost of each generator in the system (coal consumption cost + startup and shutdown cost) is minimized.

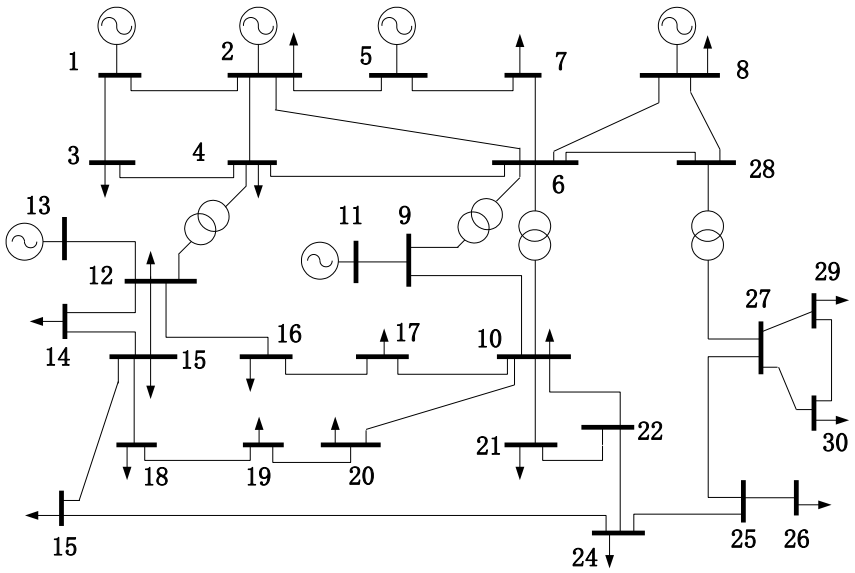

Fig. 1. IEEE-30 bus system

- Given: The given system data includes the following: (see the program.jl & data.csv)
  1) Branch parameters
  2) Generators parameters
  3) Load curve of each bus in each unit time (24 hours)
- Note: The data are all obtained based on the per-unit system, so the power

parameters, network parameters, etc. are all per-unit values. Also note that the units of coal consumption coefficients a, b, and c are tons, so the calculation of coal consumption costs must be converted into prices, assuming that the **coal price is 100€ /ton**.

- Solution: UC results, that is, the startup and shutdown plan of the generators in each unit time, the optimal output of the generators, and the DC power flow in each branch.