Qualcomm Technologies, Inc.

PM8916

Hardware Register Description

August 2015

© 2015 Qualcomm Technologies, Inc. All Rights reserved.

Qualcomm Snapdragon is a product of Qualcomm Technologies, Inc. Other Qualcomm products referenced herein are products of Qualcomm Technologies, Inc. or its other subsidiaries.

DragonBoard, Qualcomm, and Snapdragon are trademarks of Qualcomm Incorporated, registered in the United States and other countries. All Qualcomm Incorporated trademarks are used with permission. Other product and brand names may be trademarks or registered trademarks of their respective owners.

This technical data may be subject to U.S. and international export, re-export, or transfer (“export”) laws. Diversion contrary to U.S. and international law is strictly prohibited.

Use of this document is subject to the license set forth in Exhibit 1.

Qualcomm Technologies, Inc.
5775 Morehouse Drive
San Diego, CA 92121
U.S.A.

LM80-P0436-36 Rev. A

Revision history

Revision	Date	Description
A	August 7, 2015	Initial release

Contents

1 Introduction ... 8
- 1.1 Overview ... 8
- 1.2 Slave ID ... 8
- 1.3 Register description ... 9
- 1.4 Peripheral register map ... 9
- 1.5 Peripheral interrupts ... 10
- 1.6 Interrupt configuration ... 12
  - 1.6.1 Set and forget registers ... 12
  - 1.6.2 Enabling interrupts ... 12
  - 1.6.3 Interrupt detection ... 12
  - 1.6.4 Clearing interrupts ... 13

2 REVID_REVID_PM8916 ... 14

3 BUS_INTBUS_ARB_DIG ... 16

4 INT_INTR_DIG ... 18

5 SPMI_P_DIG ... 21

6 PON ... 29

7 MISC_PM8916 ... 73

8 VREF_LPDDR ... 74

9 LBC_CHGR ... 76

10 LBC_BAT_IF ... 105

11 LBC_USB ... 115

12 LBC_MISC ... 125

13 BUA_4UICC ... 130

14 TEMP_ALARM ... 138

15 COIN_COINCELL ... 145

16 MBG1_DIG ... 148

17 VADC1_LC_USR_VADC ... 151

18 VADC3_LC_MDM_VADC_ADJ ... 175

19 VADC3_LC_VBMS_VADC_ADJ ... 196

20 VADC2_LC_BTM_2_VADC_BTM ... 217

21 VADC4_LC_VBAT_VADC_ADJ 261
22 BMS_VM 282
23 BB_CLK1 372
24 BB_CLK2 375
25 RF_CLK1 378
26 RF_CLK2 381
27 SLEEP_CLK1 384
28 DIV_CLK1 387
29 DIV_CLK2 390
30 DIV_CLK3 393
31 RTC_RW 396
32 RTC_ALARM 399
33 MPP1 406
34 MPP2 417
35 MPP3 429
36 MPP4 440
37 GPIO1 452
38 GPIO2 461
39 GPIO3 470
40 GPIO4 479
41 BCLK_GEN_MAIN 488
42 S1_CTRL 490
43 S1 Power Stage 503
44 S2_CTRL 511
45 S2 Power Stage 524
46 S2_FREQ_BCLK_GEN_CLK 532
47 S3_CTRL 533
48 S3 Power Stage 545
49 S3_FREQ_BCLK_GEN_CLK 548
50 S4_CTRL 549
51 S4 Power Stage 561
52 S4_FREQ_BCLK_GEN_CLK 565
53 LDO1 566
54 LDO2 575
55 LDO3 584
56 LDO4 593

57 LDO5 601
58 LDO6 609
59 LDO7 617
60 LDO8 625
61 LDO9 633
62 LDO10 642
63 LDO11 650
64 LDO12 658
65 LDO13 666
66 LDO14 674
67 LDO15 682
68 LDO16 690
69 LDO17 698
70 LDO18 706
71 PWM_SLICE 714
72 Vibrator Driver 719
73 CDC_D_CODEC_CONTROL 722
74 CDC_A_CODEC_ANALOG 740
75 CDC_BOOST_FREQ_BCLK_GEN_CLK 788
76 CDC_NCP_FREQ_BCLK_GEN_CLK 792
Index of Registers 796
Exhibit 1 809

Figures

Figure 1-1 Addressing structure 8
Figure 1-2 PMIC register map 9
Figure 1-3 Peripheral register map 10
Figure 1-4 Interrupt message 12

MAY CONTAIN U.S. AND INTERNATIONAL EXPORT CONTROLLED INFORMATION

Tables

Table 1-1 Example of interrupt register map 11

1 Introduction

1.1 Overview

The PMIC (power management integrated circuit) device consists of two slave IDs. Each slave ID has 16K addresses. These addresses are subdivided into 64 groups of 256 addresses. Each of these groups is known as a peripheral.

Since each PMIC device has two slave IDs, the address map can support up to 128 peripherals.

The top eight bits are known as the *peripheral address* and the bottom eight bits are known as the *register offset*.

Two identical peripherals (for example, LDOs) have different peripheral IDs, but the registers within each peripheral have the same register offset. The unique slave ID (USID) allows the APQ device to access more peripherals by increasing the available register map.

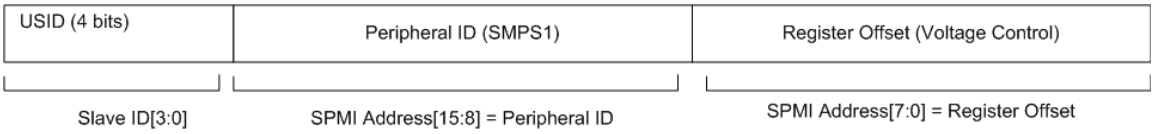

Figure 1-1 Addressing structure

Peripheral IDs are predefined and specified.

1.2 Slave ID

The PMIC device has two unique slave IDs (USID).

- USID 0 and 1 are reserved for the primary PMIC (PM8916 device)
- USID 2 and 3 are reserved for a stand-alone Qualcomm PMIC charger

1.3 Register description

Figure 1-2 illustrates each element of a register description.

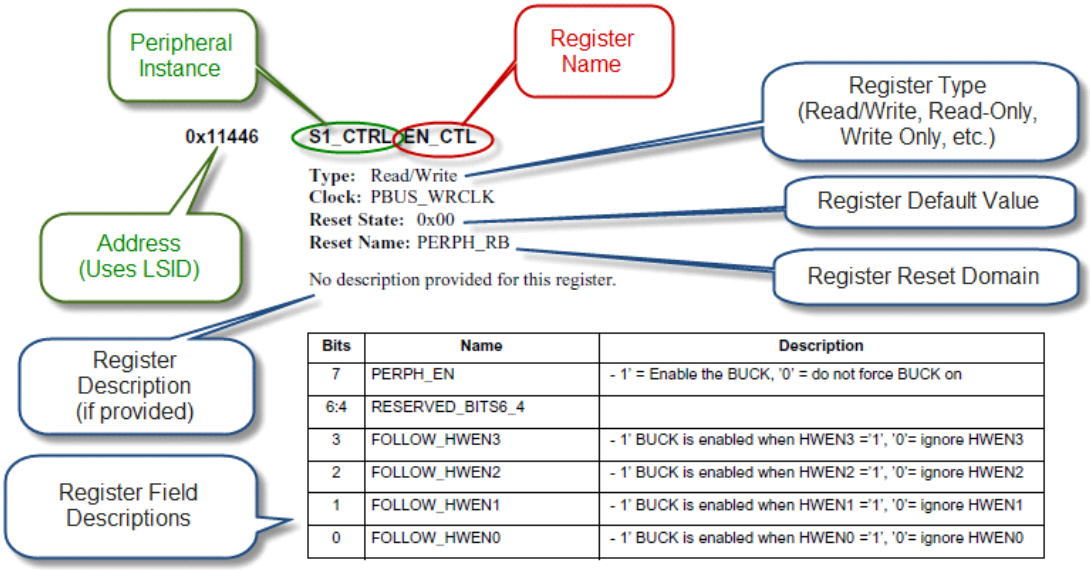

Figure 1-2 PMIC register map

The address is broken down into LSID, PID, and register offset.

For example, in the address 0x11446, from left to right:

- 1 is the unique slave ID
- 14 is the peripheral ID
- 46 is the register offset

The LSID is provided in all the register maps. In most applications, where the PMIC device is accessed from the SPMI bus, the USID is used.

1.4 Peripheral register map

Each peripheral has 256 registers that are sub-divided into sections. The subsections of the peripheral register map are as follows:

- Peripheral status
- Interrupts
- Control
- Reserved

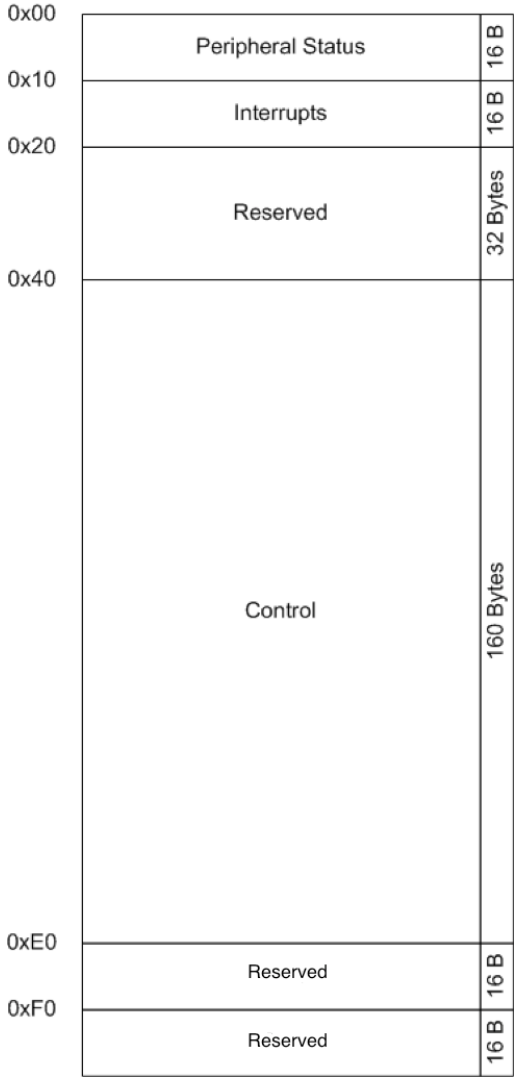

Figure 1-3 Peripheral register map

1.5 Peripheral interrupts

Each peripheral has interrupts contained within its register map. Each register is reserved for a different function. Each bit defines a different interrupt. For example, for the GPIO_IN interrupt:

- Bit 0 is reserved
- 0x10[0] holds real-time status
- 0x11[0] defines type (level/edge)
- 0x12[0] defines polarity

This setup reduces the number of transactions required to service interrupts. All of the real-time status bits for the interrupts within the module can be read with a single read of the INT_RT_STS register.

Similarly, the status of the latched interrupts is acquired with a single read of the INT_LATCHED_STS register.

Table 1-1 Example of interrupt register map

Offset	Register	MSB	LSB	Bit	Default	Description
0x10	INT_RT_STS	1	1	GPIO_HI_RT_STS	0	Interrupt real time status bits
		0	0	GPIO_IN_RT_STS	0	
0x12	INT_POLARITY_HIGH	1	1	GPIO_HI_HIGH	0	1: Interrupt triggers on a level high (rising edge) event. 0: Level HIGH triggering is disabled.
		0	0	GPIO_IN_HIGH	0	
0x13	INT_POLARITY_LOW	1	1	GPIO_HI_LOW	0	1: Interrupt triggers on a level low (falling edge) event. 0: Level low triggering is disabled.
		0	0	GPIO_IN_LOW	0	
0x14	INT_LATCHED_CLR	1	1	GPIO_HI_LATCHED_CLR	0	1: Rearms the interrupt when an interrupt is pending. Clears the internal latched status.
		0	0	GPIO_IN_LATCHED_CLR	0	
0x15	INT_EN_SET	1	1	GPIO_HI_EN_SET	0	0: Has no effect. 1: Enables the corresponding interrupt. Reading this register will return enable status.
		0	0	GPIO_IN_EN_SET	0	
0x16	INT_EN_CLR	1	1	GPIO_HI_EN_CLR	0	0: Has no effect. 1: Disables the corresponding interrupt. Reading this register returns enable status.
		0	0	GPIO_IN_EN_CLR	0	
0x18	INT_LATCHED_STS	1	1	GPIO_HI_LATCHED_STS	0	Latched Interrupt. 1: indicates the interrupt has triggered. Once the latched bit is set, it can be cleared by writing the clear bit.
		0	0	GPIO_IN_LATCHED_STS	0	
0x19	INT_PENDING_STS	1	1	GPIO_HI_PENDING_STS	0	Pending is set if interrupt has been sent but not cleared.
		0	0	GPIO_IN_PENDING_STS	0	
0x1A	INT_MID_SEL	1	0	INT_MID_SEL	0	Selects the MID that receives the interrupt.
0x1B	INT_PRIORITY	0	0	INT_PRIORITY	0	SR = 0 A = 1

1.6 Interrupt configuration

1.6.1 Set and forget registers

INT_MID_SEL: There is only one master (the APQ), so the MID is 0x00 for every peripheral.

INT_PRIORITY: SPMI supports two levels of priority. Every interrupt should use low priority; there are no high priority use cases identified.

1.6.2 Enabling interrupts

Interrupts default to disabled. To enable an interrupt, set the TYPE, PRIORITY_HIGH, and PRORITY_LOW fields. Use read-modify-write to control these registers.

Once the interrupts are configured, they can be enabled. There are two INT_EN registers: INT_EN_SET and INT_EN_CLR.

Enable the interrupt by setting the corresponding bit in INT_EN_SET. Disable the interrupt by setting the corresponding bit in INT_EN_CLR. No read-modify-write is required for these registers. Writing 0 to these registers has no effect. Reading either register returns an enable status.

1.6.3 Interrupt detection

Interrupts are sent to the master using the SPMI master write command. The interrupt message includes the peripheral ID and the triggered interrupt. In one message, all the interrupt information is communicated to the APQ device.

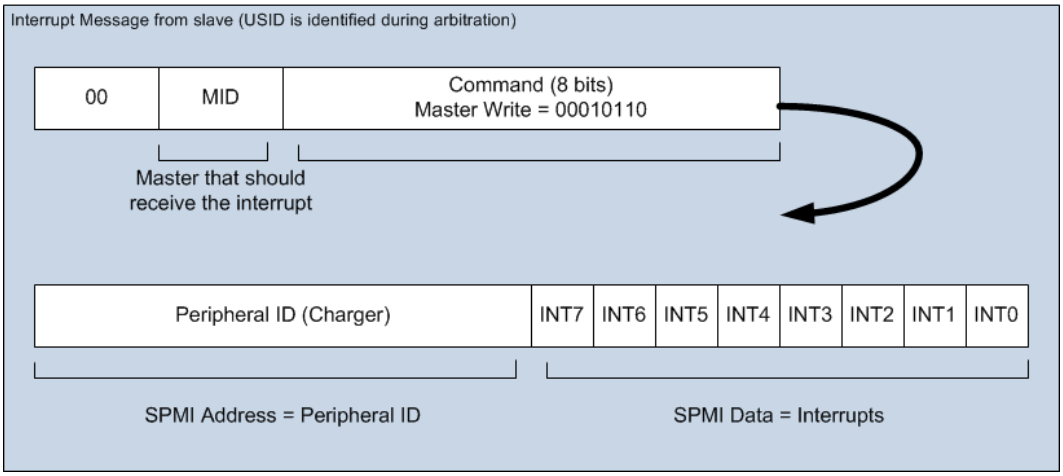

Figure 1-4 Interrupt message

1.6.4 Clearing interrupts

Assuming an interrupt is fired by GPIO_01 (peripheral ID 0x25):

1. The interrupt is generated in the PMIC device. The message is sent to the peripheral owner (RPM) via SPMI and the PMIC arbiter (in the APQ device). The message indicates that the interrupt came from GPIO_01 (PID = 0x25) and that the VREG_OK interrupt triggered.
2. (Optional) Software performs a 6-byte read starting at address 0x2510. Software is able to read status, type (level/edge), en_high, en_low, and enable state in a single read.
3. Software performs a 1-byte write of 0x01 to register 0x2516 to disable the interrupt.
4. The interrupt handler takes care of the interrupt.
5. When software is ready, a 2-byte write of 0x0101 to 0x2514 clears the interrupt and then re-enables the interrupt.

2 REVID_REVID_PM8916

0x00000100 - 0x00000103 RESERVED

0x00000104 REVID_PERPH_TYPE

Type: R
Clock: PBUS_WRCLK
Reset State: 0x51
Reset Name: N/A

Peripheral Type

PMIC_CONSTANT

REVID_PERPH_TYPE

Bits	Name	Description
7:0	TYPE	REVID (This tells you that you are talking to a PMIC)

0x00000105 REVID_PERPH_SUBTYPE

Type: R
Clock: PBUS_WRCLK
Reset State: 0x0B
Reset Name: N/A

Peripheral SubType

PMIC_CONSTANT

REVID_PERPH_SUBTYPE

Bits	Name	Description
7:0	SUBTYPE	This is PM8916

0x00000108 REVID_STATUS1

Type: R
Clock: PBUS_WRCLK
Reset State: 0x00
Reset Name: N/A

Status Registers

REVID_STATUS1

Bits	Name	Description
3:2	OPTION2	Option Pin State 11: VDD 10: HiZ 00: GND
1:0	OPTION1	Option Pin State 11: VDD 10: HiZ 00: GND

3 BUS_INTBUS_ARB_DIG

0x00000400 - 0x00000401 RESERVED

0x00000404 BUS_PERPH_TYPE

Type: R
Clock: PBUS_WRCLK
Reset State: 0x0B
Reset Name: N/A

Peripheral Type

BUS_PERPH_TYPE

Bits	Name	Description
7:0	TYPE	0xB: INTERFACE

0x00000405 BUS_PERPH_SUBTYPE

Type: R
Clock: PBUS_WRCLK
Reset State: 0x02
Reset Name: N/A

Peripheral SubType

BUS_PERPH_SUBTYPE

Bits	Name	Description
7:0	SUBTYPE	0x2: INTBUS_ARB

0x00000408 BUS_STATUS1

Type: R
Clock: PBUS_WRCLK
Reset State: 0x00000000
Reset Name: N/A

Status Registers

BUS_STATUS1

Bits	Name	Description
3:0	INTBUS_ARB_GNT	DEF: X Grant Values

0x00000444 BUS_TIMEOUT

Type: RW
Clock: PBUS_WRCLK
Reset State: 0x00
Reset Name: PERPH_RB

PMIC_SYNC=clk_19_2m:dVdd_rb

BUS_TIMEOUT

Bits	Name	Description
7:4	TIMEOUT_MANT	after TIMEOUT_MANT(2^(TIMEOUT_EXP+4))*52 ns that a master holds onto the bus, a new arbitration is forced. Write zero if no timeout desired.
3:0	TIMEOUT_EXP	after TIMEOUT_MANT(2^(TIMEOUT_EXP+4))*52 ns that a master holds onto the bus, a new arbitration is forced. Write zero if no timeout desired.

4 INT_INTR_DIG

0x00000500 - 0x00000501 IRESERVED

0x00000504 INT_PERPH_TYPE

Type: R
Clock: PBUS_WRCLK
Reset State: 0x0A
Reset Name: N/A

Peripheral Type

PMIC_CONSTANT

INT_PERPH_TYPE

Bits	Name	Description
7:0	TYPE	0xA: INTERRUPT

0x00000505 INT_PERPH_SUBTYPE

Type: R
Clock: PBUS_WRCLK
Reset State: 0x01
Reset Name: N/A

Peripheral SubType

PMIC_CONSTANT

INT_PERPH_SUBTYPE

Bits	Name	Description
7:0	SUBTYPE	0x1: PNP_INTERRUPT

0x00000508 INT_STATUS1

Type: R
Clock: PBUS_WRCLK
Reset State: 0x00
Reset Name: dVdd_rb

Status Register 1

INT_STATUS1

Bits	Name	Description
1	CLK_REQ	Or of all clk_requests 0x0: NO_CLOCK_REQ 0x1: CLOCK_REQUESTED
0	SEND_REQ	Or of all send_requests 0x0: NO_SEND_REQ 0x1: SEND_REQUESTED

0x00000509 INT_STATUS2

Type: R
Clock: PBUS_WRCLK
Reset State: 0x00
Reset Name: dVdd_rb

Status Register 2

INT_STATUS2

Bits	Name	Description
7:0	LAST_WINNER	Last Arbitration Winner

0x00000540 INT_INT_RESEND_ALL

Type: W
Clock: PBUS_WRCLK
Reset State: 0x00
Reset Name: perph_rb

Clear all Sent bits and resend all interrupts.

INT_INT_RESEND_ALL

Bits	Name	Description
0	INT_RESEND_ALL	Clear all Sent bits and resend all interrupts. 0x1: RESEND_ALL

0x00000546 INT_EN_CTL1

Type: RW
Clock: PBUS_WRCLK
Reset State: 0x00
Reset Name: PERPH_RB

INT_EN_CTL1

Bits	Name	Description
7	INTR_EN	INTR enable 0 = disables INTR from sending messages 1 = INTR is enabled and can send messages 0x0: PERIPHERAL_DISABLED 0x1: PERIPHERAL_ENABLED

5 SPMI_P_DIG

0x00000600 - 0x00000603 RESERVED

0x00000604 SPMI_PERPH_TYPE

Type: R
Clock: PBUS_WRCLK
Reset State: 0x0B
Reset Name: N/A

Peripheral Type

PMIC_CONSTANT

SPMI_PERPH_TYPE

Bits	Name	Description
7:0	TYPE	0xB: INTERFACE

0x00000605 SPMI_PERPH_SUBTYPE

Type: R
Clock: PBUS_WRCLK
Reset State: 0x01
Reset Name: N/A

Peripheral SubType

PMIC_CONSTANT

SPMI_PERPH_SUBTYPE

Bits	Name	Description
7:0	SUBTYPE	0x1: SPMI

0x00000608 SPMI_ERROR_SYNDROME

Type: R
Clock: PBUS_WRCLK
Reset State: 0x00
Reset Name: N/A

Status Register

SPMI_ERROR_SYNDROME

Bits	Name	Description
7:0	ERROR_SYNDROME	Error Syndrome from SPMI

0x0000060B SPMI_ERROR_DATA

Type: R
Clock: PBUS_WRCLK
Reset State: 0x00
Reset Name: N/A

Status Register

SPMI_ERROR_DATA

Bits	Name	Description
7:0	ERROR_DATA	Data upon data parity error

0x0000060C SPMI_ERROR_ADDR_LO

Type: R
Clock: PBUS_WRCLK
Reset State: 0x00
Reset Name: N/A

Status Register

SPMI_ERROR_ADDR_LO

Bits	Name	Description
7:0	ERROR_ADDR_LO	lower 8 bits of address upon data or addr parity error

0x0000060D SPMI_ERROR_ADDR_MD

Type: R
Clock: PBUS_WRCLK
Reset State: 0x00
Reset Name: N/A

Status Register

SPMI_ERROR_ADDR_MD

Bits	Name	Description
7:0	ERROR_ADDR_MD	middle 8 bits of address upon data or addr parity error

0x0000060E SPMI_ERROR_ADDR_HI

Type: R
Clock: PBUS_WRCLK
Reset State: 0x00
Reset Name: N/A

Status Register

SPMI_ERROR_ADDR_HI

Bits	Name	Description
3:0	ERROR_ADDR_HI	higher 4 bits of address upon data or addr parity error

0x00000610 SPMI_INT_RT_STS

Type: R
Clock: PBUS_WRCLK
Reset State: 0x00
Reset Name: PERPH_RB

Interrupt Real Time Status Bits

SPMI_INT_RT_STS

Bits	Name	Description
0	SPMI_INT_RT_STS	

0x00000611 SPMI_INT_SET_TYPE

Type: R
Clock: PBUS_WRCLK
Reset State: 0x01
Reset Name: PERPH_RB

0 = use level trigger interrupts, 1 = use edge trigger interrupts

SPMI_INT_SET_TYPE

Bits	Name	Description
0	SPMI_INT_TYPE	

0x00000612 SPMI_INT_POLARITY_HIGH

Type: R
Clock: PBUS_WRCLK
Reset State: 0x01
Reset Name: PERPH_RB

1= Interrupt will trigger on a level high (rising edge) event, 0 = level high triggering is disabled

SPMI_INT_POLARITY_HIGH

Bits	Name	Description
0	SPMI_INT_HIGH	

0x00000613 SPMI_INT_POLARITY_LOW

Type: R
Clock: PBUS_WRCLK
Reset State: 0x00
Reset Name: PERPH_RB

1' = Interrupt will trigger on a level low (falling edge) event, '0' = level low triggering is disabled

SPMI_INT_POLARITY_LOW

Bits	Name	Description
0	SPMI_INT_LOW	

0x00000614 SPMI_INT_LATCHED_CLR

Type: W
Clock: PBUS_WRCLK
Reset State: 0x00
Reset Name: PERPH_RB

writing a '1' to this interrupt will rearm the interrupt when an interrupt is pending. It clears the internal sticky and sent bits

SPMI_INT_LATCHED_CLR

Bits	Name	Description
0	SPMI_INT_LATCHED_CLR	

0x00000615 SPMI_INT_EN_SET

Type: RW
Clock: PBUS_WRCLK
Reset State: 0x00
Reset Name: PERPH_RB

writing '0' to this register has no effect. Writing a '1' will enable the corresponding interrupt. Reading this register will readback enable status

PMIC_SET_MASK

SPMI_INT_EN_SET

Bits	Name	Description
0	SPMI_INT_EN_SET	

0x00000616 SPMI_INT_EN_CLR

Type: RW
Clock: PBUS_WRCLK
Reset State: 0x00
Reset Name: PERPH_RB

writing '0' to this register has no effect. Writing a '1' will disable the corresponding interrupt. Reading this register will readback enable status

PMIC_CLR_MASK=INT_EN_SET

SPMI_INT_EN_CLR

Bits	Name	Description
0	SPMI_INT_EN_CLR	

0x00000618 SPMI_INT_LATCHED_STS

Type: R
Clock: PBUS_WRCLK
Reset State: 0x00
Reset Name: PERPH_RB

Debug: Latched (Sticky) Interrupt. '1' indicates that the interrupt has triggered. Once the latched bit is set it can only be cleared by writing the clear bit.

SPMI_INT_LATCHED_STS

Bits	Name	Description
0	SPMI_INT_LATCHED_STS	

0x00000619 SPMI_INT_PENDING_STS

Type: R
Clock: PBUS_WRCLK
Reset State: 0x00
Reset Name: PERPH_RB

Debug: Pending is set if interrupt has been sent but not cleared.

SPMI_INT_PENDING_STS

Bits	Name	Description
0	SPMI_INT_PENDING_STS	

0x0000061A SPMI_INT_MID_SEL

Type: RW
Clock: PBUS_WRCLK
Reset State: 0x00
Reset Name: PERPH_RB

Selects the MID that will receive the interrupt

SPMI_INT_MID_SEL

Bits	Name	Description
1:0	INT_MID_SEL	

0x0000061B SPMI_INT_PRIORITY

Type: RW
Clock: PBUS_WRCLK
Reset State: 0x00
Reset Name: PERPH_RB

SPMI_INT_PRIORITY

Bits	Name	Description
0	INT_PRIORITY	

0x00000640 SPMI_SPMI_BUF_CFG

Type: RW
Clock: PBUS_WRCLK
Reset State: 0x01
Reset Name: PERPH_RB

SPMI_SPMI_BUF_CFG

Bits	Name	Description
1:0	BUFFER_STRENGTH	SPMI Buffer Drive Strength Configuration 0x0: LOW10PF 0x1: MID20PF 0x2: HIGH40PF 0x3: VERYHIGH50PF

0x00000641 SPMI_SSC_DETECT_CFG

Type: RW
Clock: PBUS_WRCLK
Reset State: 0x00
Reset Name: PERPH_RB

SCC Detection Configuration

SPMI_SSC_DETECT_CFG

Bits	Name	Description
2:0	SSC_DETECT_CFG	Bit0=Q1_DELAY_DISABLE when bit=1 then the delay between q1 and q2 is disabled, there is a mux between the flops and the bit is connected to the mux_select. When at default=0,q2 uses q1_delayed and glitch should be masked. Bit1=WINDOW_ENABLE when bit=1 then SSC detects only when it is expected,default=0 detect SSC all time. Bit2=Reserved 0x0: WINDOW_DISABLED_Q1_DELAY_ENABLED 0x1: WINDOW_DISABLED_Q1_DELAY_DISABLED 0x2: WINDOW_ENABLED_Q1_DELAY_ENABLED 0x3: WINDOW_ENABLED_Q1_DELAY_DISABLED

6 PON

0x00000800 - 0x00000803 RESERVED

0x00000804 PON_PERPH_TYPE

Type: R
Clock: pbus_wrclk
Reset State: 0x01
Reset Name: N/A

Peripheral Type

PMIC_CONSTANT

PON_PERPH_TYPE

Bits	Name	Description
7:0	TYPE	0x1: PON

0x00000805 PON_PERPH_SUBTYPE

Type: R
Clock: pbus_wrclk
Reset State: 0x01
Reset Name: N/A

Peripheral SubType

PMIC_CONSTANT

PON_PERPH_SUBTYPE

Bits	Name	Description
7:0	SUBTYPE	0x1: LV_PON

0x00000807 PON_PON_PBL_STATUS

Type: R
Clock: pbus_wrclk
Reset State: 0x00000000
Reset Name: N/A

Stage 2 reset generation and register access error status.

PON_PON_PBL_STATUS

Bits	Name	Description
7	DVDD_RB_OCCURRED	DEF: X DVDD_RB was asserted during the last power cycle 0x0: NO_RESET 0x1: RESET_OCCURRED
6	XVDD_RB_OCCURRED	DEF: X XVDD_RB was asserted during the last power cycle 0x0: NO_RESET 0x1: RESET_OCCURRED
5	REG_WRITE_ERROR	DEF: X A register field write was attempted when a block was enabled. Writing to this address clears field. 0x0: NO_ERROR 0x1: ERROR_OCCURRED
4	REG_RESET_ERROR	DEF: X A register field write was attempted when reset was asserted. Writing to this address clears field. 0x0: NO_ERROR 0x1: ERROR_OCCURRED
3	REG_SYNC_ERROR	DEF: X Indicates a synchronized register field was over written before it's contents were latched by logic. Writing to this address clears field.,'NO_ERROR=0, ERROR_OCCURRED=1',,,'

0x00000808 PON_PON_REASON1

Type: R
Clock: pbus_wrclk
Reset State: 0x00000000
Reset Name: raw_xVdd_rb

Reasons that the PMIC left the off state. All zeros mean that no trigger received

PON_PON_REASON1

Bits	Name	Description
7	KPDPWR_N	DEF: X Triggered from new KPDPWR press 0x1: TRIGGER_RECEIVED
6	CBLPWR_N	DEF: X Triggered from CBL_PWR1_N 0x1: TRIGGER_RECEIVED
5	PON1	DEF: X Triggered from PON1 0x1: TRIGGER_RECEIVED
4	USB_CHG	DEF: X Triggered from USB charger 0x1: TRIGGER_RECEIVED
3	DC_CHG	DEF: X Triggered from DC charger 0x1: TRIGGER_RECEIVED
2	RTC	DEF: X Triggered from RTC 0x1: TRIGGER_RECEIVED
1	SMPL	DEF: X Triggered from SMPL 0x1: TRIGGER_RECEIVED
0	HARD_RESET	DEF: X Triggered from a Hard Reset event (check POFF reason for the trigger) 0x1: TRIGGER_RECEIVED

0x0000080A PON_WARM_RESET_REASON1

Type: R
Clock: pbus_wrclk
Reset State: 0x00000000
Reset Name: raw_xVdd_rb

Reasons that PMIC entered the Warm Reset state (pst_13).

This register is automatically reset when the PMIC turns on (i.e. PON_WARM_REASON_CLEAR register field 1) or by writing to this address. This is a synchronized address so, for reliable hardware operation, the minimum time allowed between write operations is 5 sleep clock cycles.

PON_WARM_RESET_REASON1

Bits	Name	Description
7	KPDPWR_N	DEF: X Triggered by KPDPWR_N 0x1: TRIGGER_RECEIVED
6	RESIN_N	DEF: X Triggered by RESIN_N 0x1: TRIGGER_RECEIVED
5	KPDPWR_AND_RESIN	DEF: X Triggered by simultaneous KPDPWR_N + RESIN_N 0x1: TRIGGER_RECEIVED
4	GP2	DEF: X Triggered by Keypad_Reset2 0x1: TRIGGER_RECEIVED
3	GP1	DEF: X Triggered by Keypad_Reset1 0x1: TRIGGER_RECEIVED
2	PMIC_WD	DEF: X Triggered by PMIC Watchdog 0x1: TRIGGER_RECEIVED
1	PS_HOLD	DEF: X Triggered by PS_HOLD 0x1: TRIGGER_RECEIVED
0	SOFT	DEF: X Triggered by Software 0x1: TRIGGER_RECEIVED

0x0000080B PON_WARM_RESET_REASON2

Type: R
Clock: pbus_wrclk
Reset State: 0x00000000
Reset Name: raw_xVdd_rb

Reasons that PMIC entered the Warm Reset state (pst_13). This register is automatically reset when the PMIC turns on (i.e. PON_WARM_REASON_CLEAR register field 1) or by writing to WARM_RESET_REASON1 register address.

PON_WARM_RESET_REASON2

Bits	Name	Description
4	TFT	DEF: X Triggered TFT 0x1: TRIGGER_RECEIVED

0x0000080C PON_POFF_REASON1

Type: R
Clock: pbus_wrclk
Reset State: 0x00000000
Reset Name: raw_xVdd_rb

Reasons that the PMIC left the on state and commenced a shutdown sequence. All zeros mean that no trigger received or a master bandgap or phone power fault occurred.

PON_POFF_REASON1

Bits	Name	Description
7	KPDPWR_N	DEF: X Triggered by KPDPWR_N 0x1: TRIGGER_RECEIVED
6	RESIN_N	DEF: X Triggered by RESIN_N 0x1: TRIGGER_RECEIVED
5	KPDPWR_AND_RESIN	DEF: X Triggered by simultaneous KPDPWR_N + RESIN_N 0x1: TRIGGER_RECEIVED
4	GP2	DEF: X Triggered by Keypad_Reset2 0x1: TRIGGER_RECEIVED
3	GP1	DEF: X Triggered by Keypad_Reset1 0x1: TRIGGER_RECEIVED
2	PMIC_WD	DEF: X Triggered by PMIC Watchdog 0x1: TRIGGER_RECEIVED
1	PS_HOLD	DEF: X Triggered by PS_HOLD 0x1: TRIGGER_RECEIVED
0	SOFT	DEF: X Triggered by Software 0x1: TRIGGER_RECEIVED

0x0000080D PON_POFF_REASON2

Type: R
Clock: pbus_wrclk
Reset State: 0x00000000
Reset Name: raw_xVdd_rb

Reasons that the PMIC left the on state and commenced a shutdown sequence. All zeros mean that no trigger received or a master bandgap or phone power fault occurred.

PON_POFF_REASON2

Bits	Name	Description
7	STAGE3	DEF: X Triggered by stage3 reset 0x1: TRIGGER_RECEIVED
6	OTST3	DEF: X Triggered by Overtemp 0x1: TRIGGER_RECEIVED
5	UVLO	DEF: X Triggered by UVLO 0x1: TRIGGER_RECEIVED
4	TFT	DEF: X Triggered by TFT 0x1: TRIGGER_RECEIVED
3	CHARGER	DEF: X Triggered by Charger (ENUM_TIMER, BOOT_DONE) 0x1: TRIGGER_RECEIVED
2	AVDD_RB	DEF: X Triggered by AVDD_RB 0x1: TRIGGER_RECEIVED

0x0000080E PON_SOFT_RESET_REASON1

Type: R
Clock: pbus_wrclk
Reset State: 0x00000000
Reset Name: raw_xVdd_rb

Reasons that the PMIC registers were reset. All zeros mean that no trigger received.

Clear both soft reason registers by writing to this register. This is a synchronized address so, for reliable hardware operation, the minimum time allowed between write operations is 5 sleep clock cycles.

PON_SOFT_RESET_REASON1

Bits	Name	Description
7	KPDPWR_N	DEF: X Triggered by KPDPWR_N 0x1: TRIGGER_RECEIVED
6	RESIN_N	DEF: X Triggered by RESIN_N 0x1: TRIGGER_RECEIVED
5	KPDPWR_AND_RESIN	DEF: X Triggered by simultaneous KPDPWR_N + RESIN_N 0x1: TRIGGER_RECEIVED
4	GP2	DEF: X Triggered by Keypad_Reset2 0x1: TRIGGER_RECEIVED
3	GP1	DEF: X Triggered by Keypad_Reset1 0x1: TRIGGER_RECEIVED
2	PMIC_WD	DEF: X Triggered by PMIC Watchdog 0x1: TRIGGER_RECEIVED
1	PS_HOLD	DEF: X Triggered by PS_HOLD 0x1: TRIGGER_RECEIVED
0	SOFT	DEF: X Triggered by Software 0x1: TRIGGER_RECEIVED

0x0000080F PON_SOFT_RESET_REASON2

Type: R
Clock: pbus_wrclk
Reset State: 0x00000000
Reset Name: raw_xVdd_rb

Reasons that the PMIC registers were reset. All zeros mean that no trigger received. Clear the soft reason registers by writing to the SOFT_RESET_REASON1 register

PON_SOFT_RESET_REASON2

Bits	Name	Description
4	TFT	DEF: X Triggered TFT 0x1: TRIGGER_RECEIVED

0x00000810 PON_INT_RT_STS

Type: R
Clock: pbus_wrclk
Reset State: 0x00000000
Reset Name: N/A

Interrupt Real Time Status Bits

PON_INT_RT_STS

Bits	Name	Description
7	SOFT_RESET_OCCURED	DEF: X warning that a reset event has been triggered by the PMIC Watchdog timer 0x0: INT_RT_STATUS_LOW 0x1: INT_RT_STATUS_HIGH
6	PMIC_WD_BARK	DEF: X warning that a reset event has been triggered by the PMIC Watchdog timer 0x0: INT_RT_STATUS_LOW 0x1: INT_RT_STATUS_HIGH
5	K_R_BARK	DEF: X warning that a reset event has been triggered by asserting RESIN_N and KPDPWR_N simultaneously 0x0: INT_RT_STATUS_LOW 0x1: INT_RT_STATUS_HIGH
4	RESIN_BARK	DEF: X warning that a reset event has been triggered by RESIN_N 0x0: INT_RT_STATUS_LOW 0x1: INT_RT_STATUS_HIGH
3	KPDPWR_BARK	DEF: X warning that a reset event has been triggered by KPDPWR_N 0x0: INT_RT_STATUS_LOW 0x1: INT_RT_STATUS_HIGH
2	CBLPWR_ON	DEF: X CBLPWR_N has been asserted for longer than his debounce timer 0x0: INT_RT_STATUS_LOW 0x1: INT_RT_STATUS_HIGH
1	RESIN_ON	DEF: X RESIN_N has been asserted for longer than his debounce timer 0x0: INT_RT_STATUS_LOW 0x1: INT_RT_STATUS_HIGH
0	KPDPWR_ON	DEF: X KPDPWR_N has been asserted for longer than his debounce timer 0x0: INT_RT_STATUS_LOW 0x1: INT_RT_STATUS_HIGH

0x00000811 PON_INT_SET_TYPE

Type: RW
Clock: pbus_wrclk
Reset State: 0x00
Reset Name: perph_rb

0 = use level trigger interrupts, 1 = use edge trigger interrupts

PON_INT_SET_TYPE

Bits	Name	Description
7	SOFT_RESET_OCCURED	0x0: LEVEL 0x1: EDGE
6	PMIC_WD_BARK	0x0: LEVEL 0x1: EDGE
5	K_R_BARK	0x0: LEVEL 0x1: EDGE
4	RESIN_BARK	0x0: LEVEL 0x1: EDGE
3	KPDPWR_BARK	0x0: LEVEL 0x1: EDGE
2	CBLPWR_ON	0x0: LEVEL 0x1: EDGE
1	RESIN_ON	0x0: LEVEL 0x1: EDGE
0	KPDPWR_ON	0x0: LEVEL 0x1: EDGE

0x00000812 PON_INT_POLARITY_HIGH

Type: RW
Clock: pbus_wrclk
Reset State: 0x00
Reset Name: perph_rb

1= Interrupt will trigger on a level high (rising edge) event, 0 = level high triggering is disabled

PON_INT_POLARITY_HIGH

Bits	Name	Description
7	SOFT_RESET_OCCURED	0x0: HIGH_TRIGGER_DISABLED 0x1: HIGH_TRIGGER_ENABLED

PON_INT_POLARITY_HIGH (cont.)

Bits	Name	Description
6	PMIC_WD_BARK	0x0: HIGH_TRIGGER_DISABLED 0x1: HIGH_TRIGGER_ENABLED
5	K_R_BARK	0x0: HIGH_TRIGGER_DISABLED 0x1: HIGH_TRIGGER_ENABLED
4	RESIN_BARK	0x0: HIGH_TRIGGER_DISABLED 0x1: HIGH_TRIGGER_ENABLED
3	KPDPWR_BARK	0x0: HIGH_TRIGGER_DISABLED 0x1: HIGH_TRIGGER_ENABLED
2	CBLPWR_ON	0x0: HIGH_TRIGGER_DISABLED 0x1: HIGH_TRIGGER_ENABLED
1	RESIN_ON	0x0: HIGH_TRIGGER_DISABLED 0x1: HIGH_TRIGGER_ENABLED
0	KPDPWR_ON	0x0: HIGH_TRIGGER_DISABLED 0x1: HIGH_TRIGGER_ENABLED

0x00000813 PON_INT_POLARITY_LOW

Type: RW
Clock: pbus_wrclk
Reset State: 0x00
Reset Name: perph_rb

1' = Interrupt will trigger on a level low (falling edge) event, '0' = level low triggering is disabled

PON_INT_POLARITY_LOW

Bits	Name	Description
7	SOFT_RESET_OCCURED	0x0: LOW_TRIGGER_DISABLED 0x1: LOW_TRIGGER_ENABLED
6	PMIC_WD_BARK	0x0: LOW_TRIGGER_DISABLED 0x1: LOW_TRIGGER_ENABLED
5	K_R_BARK	0x0: LOW_TRIGGER_DISABLED 0x1: LOW_TRIGGER_ENABLED
4	RESIN_BARK	0x0: LOW_TRIGGER_DISABLED 0x1: LOW_TRIGGER_ENABLED
3	KPDPWR_BARK	0x0: LOW_TRIGGER_DISABLED 0x1: LOW_TRIGGER_ENABLED
2	CBLPWR_ON	0x0: LOW_TRIGGER_DISABLED 0x1: LOW_TRIGGER_ENABLED

PON_INT_POLARITY_LOW (cont.)

Bits	Name	Description
1	RESIN_ON	0x0: LOW_TRIGGER_DISABLED 0x1: LOW_TRIGGER_ENABLED
0	KPDPWR_ON	0x0: LOW_TRIGGER_DISABLED 0x1: LOW_TRIGGER_ENABLED

0x00000814 PON_INT_LATCHED_CLR

Type: W
Clock: pbus_wrclk
Reset State: 0x00
Reset Name: perph_rb

Writing a '1' to this interrupt will rearm the interrupt when an interrupt is pending. It clears the internal sticky and sent bits

PON_INT_LATCHED_CLR

Bits	Name	Description
7	SOFT_RESET_OCCURED	
6	PMIC_WD_BARK	
5	K_R_BARK	
4	RESIN_BARK	
3	KPDPWR_BARK	
2	CBLPWR_ON	
1	RESIN_ON	
0	KPDPWR_ON	

0x00000815 PON_INT_EN_SET

Type: RW
Clock: pbus_wrclk
Reset State: 0x00
Reset Name: perph_rb

Writing '0' to this register has no effect. Writing a '1' will enable the corresponding interrupt. Reading this register will readback enable status

PMIC_SET_MASK

PON_INT_EN_SET

Bits	Name	Description
7	SOFT_RESET_OCCURED	0x0: INT_DISABLED 0x1: INT_ENABLED
6	PMIC_WD_BARK	0x0: INT_DISABLED 0x1: INT_ENABLED
5	K_R_BARK	0x0: INT_DISABLED 0x1: INT_ENABLED
4	RESIN_BARK	0x0: INT_DISABLED 0x1: INT_ENABLED
3	KPDPWR_BARK	0x0: INT_DISABLED 0x1: INT_ENABLED
2	CBLPWR_ON	0x0: INT_DISABLED 0x1: INT_ENABLED
1	RESIN_ON	0x0: INT_DISABLED 0x1: INT_ENABLED
0	KPDPWR_ON	0x0: INT_DISABLED 0x1: INT_ENABLED

0x00000816 PON_INT_EN_CLR

Type: RW
Clock: pbus_wrclk
Reset State: 0x00
Reset Name: perph_rb

writing '0' to this register has no effect. Writing a '1' will disable the corresponding interrupt. Reading this register will readback enable status

PMIC_CLR_MASK=INT_EN_SET

PON_INT_EN_CLR

Bits	Name	Description
7	SOFT_RESET_OCCURED	0x0: INT_DISABLED 0x1: INT_ENABLED
6	PMIC_WD_BARK	0x0: INT_DISABLED 0x1: INT_ENABLED
5	K_R_BARK	0x0: INT_DISABLED 0x1: INT_ENABLED
4	RESIN_BARK	0x0: INT_DISABLED 0x1: INT_ENABLED

PON_INT_EN_CLR (cont.)

Bits	Name	Description
3	KPDPWR_BARK	0x0: INT_DISABLED 0x1: INT_ENABLED
2	CBLPWR_ON	0x0: INT_DISABLED 0x1: INT_ENABLED
1	RESIN_ON	0x0: INT_DISABLED 0x1: INT_ENABLED
0	KPDPWR_ON	0x0: INT_DISABLED 0x1: INT_ENABLED

0x00000818 PON_INT_LATCHED_STS

Type: R
Clock: pbus_wrclk
Reset State: 0x00000000
Reset Name: N/A

Debug: Latched (Sticky) Interrupt. '1' indicates that the interrupt has triggered. Once the latched bit is set it can only be cleared by writing the clear bit.

PON_INT_LATCHED_STS

Bits	Name	Description
7	SOFT_RESET_OCCURED	DEF: X 0x0: NO_INT_RECEIVED 0x1: INTERRUPT_RECEIVED
6	PMIC_WD_BARK	DEF: X 0x0: NO_INT_RECEIVED 0x1: INTERRUPT_RECEIVED
5	K_R_BARK	DEF: X 0x0: NO_INT_RECEIVED 0x1: INTERRUPT_RECEIVED
4	RESIN_BARK	DEF: X 0x0: NO_INT_RECEIVED 0x1: INTERRUPT_RECEIVED
3	KPDPWR_BARK	DEF: X 0x0: NO_INT_RECEIVED 0x1: INTERRUPT_RECEIVED
2	CBLPWR_ON	DEF: X 0x0: NO_INT_RECEIVED 0x1: INTERRUPT_RECEIVED

PON_INT_LATCHED_STS (cont.)

Bits	Name	Description
1	RESIN_ON	DEF: X 0x0: NO_INT_RECEIVED 0x1: INTERRUPT_RECEIVED
0	KPDPWR_ON	DEF: X 0x0: NO_INT_RECEIVED 0x1: INTERRUPT_RECEIVED

0x00000819 PON_INT_PENDING_STS

Type: R
Clock: pbus_wrclk
Reset State: 0x00000000
Reset Name: N/A

Debug: Pending is set if interrupt has been sent but not cleared.

PON_INT_PENDING_STS

Bits	Name	Description
7	SOFT_RESET_OCCURED	DEF: X 0x0: NO_INT_PENDING 0x1: INTERRUPT_PENDING
6	PMIC_WD_BARK	DEF: X 0x0: NO_INT_PENDING 0x1: INTERRUPT_PENDING
5	K_R_BARK	DEF: X 0x0: NO_INT_PENDING 0x1: INTERRUPT_PENDING
4	RESIN_BARK	DEF: X 0x0: NO_INT_PENDING 0x1: INTERRUPT_PENDING
3	KPDPWR_BARK	DEF: X 0x0: NO_INT_PENDING 0x1: INTERRUPT_PENDING
2	CBLPWR_ON	DEF: X 0x0: NO_INT_PENDING 0x1: INTERRUPT_PENDING
1	RESIN_ON	DEF: X 0x0: NO_INT_PENDING 0x1: INTERRUPT_PENDING

PON_INT_PENDING_STS (cont.)

Bits	Name	Description
0	KPDPWR_ON	DEF: X 0x0: NO_INT_PENDING 0x1: INTERRUPT_PENDING

0x0000081A PON_INT_MID_SEL

Type: RW
Clock: pbus_wrclk
Reset State: 0x00
Reset Name: perph_rb

Selects the MID that will receive the interrupt

PON_INT_MID_SEL

Bits	Name	Description
1:0	INT_MID_SEL	0x0: MID0 0x1: MID1 0x2: MID2 0x3: MID3

0x0000081B PON_INT_PRIORITY

Type: RW
Clock: pbus_wrclk
Reset State: 0x00
Reset Name: perph_rb

PON_INT_PRIORITY

Bits	Name	Description
0	INT_PRIORITY	0x0: SR 0x1: A

0x00000840 PON_KPDPWR_N_RESET_S1_TIMER

Type: RW
Clock: pbus_wrclk
Reset State: 0x0F
Reset Name: dVdd_rb

Stage 1 (Bark) Timer. Bark cannot be disabled, but interrupt can be disabled if necessary

PON_KPDPWR_N_RESET_S1_TIMER

Bits	Name	Description
3:0	S1_TIMER	Time that the debounced trigger must be held before bark is sent to APQ. This field can only be updated when block is disabled (i.e. 5 sleep clock cycles after writing 0 to S2_RESET_EN and PON_TRIGGER_EN:KPDPWR_N fields). 0x0: MS_0 0x1: MS_32 0x2: MS_56 0x3: MS_80 0x4: MS_128 0x5: MS_184 0x6: MS_272 0x7: MS_408 0x8: MS_608 0x9: MS_904 0xA: MS_1352 0xB: MS_2048 0xC: MS_3072 0xD: MS_4480 0xE: MS_6720 0xF: MS_10256

0x00000841 PON_KPDPWR_N_RESET_S2_TIMER

Type: RW
Clock: pbus_wrclk
Reset State: 0x07
Reset Name: dVdd_rb

Stage 2 (bite) configuration

PON_KPDPWR_N_RESET_S2_TIMER

Bits	Name	Description
2:0	S2_TIMER	Time that debounced trigger must be held before S2 reset occurs {0ms, 10ms, 50ms, 100ms, 250ms, 500ms, 1s, 2s} This field can only be updated when block is disabled (i.e. 8 sleep clock cycles after writing 0 to S2_RESET_EN field). 0x0: MS_0 0x1: MS_10 0x2: MS_50 0x3: MS_100 0x4: MS_250 0x5: MS_500 0x6: S_1 0x7: S_2

0x00000842 PON_KPDPWR_N_RESET_S2_CTL

Type: RW
Clock: pbus_wrclk
Reset State: 0x04
Reset Name: dVdd_rb

Stage 2 (bite) configuration

PON_KPDPWR_N_RESET_S2_CTL

Bits	Name	Description
3:0	RESET_TYPE	This field can only be updated when block is disabled (i.e. 8 sleep clock cycles after writing 0 to S2_RESET_EN field). 0x0: RESERVED0 0x1: WARM_RESET 0x2: IMMEDIATE_XVDD_SHUTDOWN 0x3: RESERVED3 0x4: SHUTDOWN 0x5: DVDD_SHUTDOWN 0x6: XVDD_SHUTDOWN 0x7: HARD_RESET 0x8: DVDD_HARD_RESET 0x9: XVDD_HARD_RESET 0xA: WARM_RESET_AND_DVDD_SHUTDOWN 0xB: WARM_RESET_AND_XVDD_SHUTDOWN 0xC: WARM_RESET_AND_SHUTDOWN 0xD: WARM_RESET_THEN_HARD_RESET 0xE: WARM_RESET_THEN_DVDD_HARD_RESET 0xF: WARM_RESET_THEN_XVDD_HARD_RESET

0x00000843 PON_KPDPWR_N_RESET_S2_CTL2

Type: RW
Clock: pbus_wrclk
Reset State: 0x00
Reset Name: dVdd_rb

Stage 2 (bite) configuration

PON_KPDPWR_N_RESET_S2_CTL2

Bits	Name	Description
7	S2_RESET_EN	Enable Stage 2 reset Field is synchronized by a 2-stage shift register so, for reliable hardware operation, the minimum time allowed between write operations is 3 sleep clock cycles. 0x0: DISABLED 0x1: ENABLED

0x00000844 PON_RESIN_N_RESET_S1_TIMER

Type: RW
Clock: pbus_wrclk
Reset State: 0x0F
Reset Name: dVdd_rb

Stage 1 (Bark) Timer. Bark cannot be disabled, but interrupt can be disabled if necessary

PON_RESIN_N_RESET_S1_TIMER

Bits	Name	Description
3:0	S1_TIMER	Time that the debounced trigger must be held before bark is sent to APQ. This field can only be updated when block is disabled (i.e. 8 sleep clock cycles after writing 0 to S2_RESET_EN field). 0x0: MS_0 0x1: MS_32 0x2: MS_56 0x3: MS_80 0x4: MS_128 0x5: MS_184 0x6: MS_272 0x7: MS_408 0x8: MS_608 0x9: MS_904 0xA: MS_1352 0xB: MS_2048 0xC: MS_3072 0xD: MS_4480 0xE: MS_6720 0xF: MS_10256

0x00000845 PON_RESIN_N_RESET_S2_TIMER

Type: RW
Clock: pbus_wrclk
Reset State: 0x07
Reset Name: dVdd_rb

Stage 2 (bite) configuration

PON_RESIN_N_RESET_S2_TIMER

Bits	Name	Description
2:0	S2_TIMER	Time that debounced trigger must be held before S2 reset occurs {0ms, 10ms, 50ms, 100ms, 250ms, 500ms, 1s, 2s} This field can only be updated when block is disabled (i.e. 8 sleep clock cycles after writing 0 to S2_RESET_EN field). 0x0: MS_0 0x1: MS_10 0x2: MS_50 0x3: MS_100 0x4: MS_250 0x5: MS_500 0x6: S_1 0x7: S_2

0x00000846 PON_RESIN_N_RESET_S2_CTL

Type: RW
Clock: pbus_wrclk
Reset State: 0x04
Reset Name: dVdd_rb

Stage 2 (bite) configuration

PON_RESIN_N_RESET_S2_CTL

Bits	Name	Description
3:0	RESET_TYPE	This field can only be updated when block is disabled (i.e. 8 sleep clock cycles after writing 0 to S2_RESET_EN field). 0x0: RESERVED0 0x1: WARM_RESET 0x2: IMMEDIATE_XVDD_SHUTDOWN 0x3: RESERVED3 0x4: SHUTDOWN 0x5: DVDD_SHUTDOWN 0x6: XVDD_SHUTDOWN 0x7: HARD_RESET 0x8: DVDD_HARD_RESET 0x9: XVDD_HARD_RESET 0xA: WARM_RESET_AND_DVDD_SHUTDOWN 0xB: WARM_RESET_AND_XVDD_SHUTDOWN 0xC: WARM_RESET_AND_SHUTDOWN 0xD: WARM_RESET_THEN_HARD_RESET 0xE: WARM_RESET_THEN_DVDD_HARD_RESET 0xF: WARM_RESET_THEN_XVDD_HARD_RESET

0x00000847 PON_RESIN_N_RESET_S2_CTL2

Type: RW
Clock: pbus_wrclk
Reset State: 0x00
Reset Name: dVdd_rb

Stage 2 (bite) configuration

PON_RESIN_N_RESET_S2_CTL2

Bits	Name	Description
7	S2_RESET_EN	Enable Stage 2 reset Field is synchronized by a 2-stage shift register so, for reliable hardware operation, the minimum time allowed between write operations is 3 sleep clock cycles. 0x0: DISABLED 0x1: ENABLED

0x00000848 PON_RESIN_AND_KPDPWR_RESET_S1_TIMER

Type: RW
Clock: pbus_wrclk
Reset State: 0x0F
Reset Name: dVdd_rb

Stage 1 (Bark) Timer. Bark cannot be disabled, but interrupt can be disabled if necessary

PON_RESIN_AND_KPDPWR_RESET_S1_TIMER

Bits	Name	Description
3:0	S1_TIMER	Time that the debounced trigger must be held before bark is sent to APQ. This field can only be updated when block is disabled (i.e. 8 sleep clock cycles after writing 0 to S2_RESET_EN field). 0x0: MS_0 0x1: MS_32 0x2: MS_56 0x3: MS_80 0x4: MS_128 0x5: MS_184 0x6: MS_272 0x7: MS_408 0x8: MS_608 0x9: MS_904 0xA: MS_1352 0xB: MS_2048 0xC: MS_3072 0xD: MS_4480 0xE: MS_6720 0xF: MS_10256

0x00000849 PON_RESIN_AND_KPDPWR_RESET_S2_TIMER

Type: RW
Clock: pbus_wrclk
Reset State: 0x07
Reset Name: dVdd_rb

Stage 2 (bite) configuration

PON_RESIN_AND_KPDPWR_RESET_S2_TIMER

Bits	Name	Description
2:0	S2_TIMER	Time that debounced trigger must be held before S2 reset occurs {0ms, 10ms, 50ms, 100ms, 250ms, 500ms, 1s, 2s} This field can only be updated when block is disabled (i.e. 8 sleep clock cycles after writing 0 to S2_RESET_EN field). 0x0: MS_0 0x1: MS_10 0x2: MS_50 0x3: MS_100 0x4: MS_250 0x5: MS_500 0x6: S_1 0x7: S_2

0x0000084A PON_RESIN_AND_KPDPWR_RESET_S2_CTL

Type: RW
Clock: pbus_wrclk
Reset State: 0x04
Reset Name: dVdd_rb

Stage 2 (bite) configuration

PON_RESIN_AND_KPDPWR_RESET_S2_CTL

Bits	Name	Description
3:0	RESET_TYPE	This field can only be updated when block is disabled (i.e. 8 sleep clock cycles after writing 0 to S2_RESET_EN field). 0x0: RESERVED0 0x1: WARM_RESET 0x2: RESERVED2 0x3: RESERVED3 0x4: RESERVED4 0x5: RESERVED5 0x6: RESERVED6 0x7: HARD_RESET 0x8: DVDD_HARD_RESET 0x9: XVDD_HARD_RESET 0xA: RESERVED10 0xB: RESERVED11 0xC: RESERVED12 0xD: WARM_RESET_THEN_HARD_RESET 0xE: WARM_RESET_THEN_DVDD_HARD_RESET 0xF: WARM_RESET_THEN_XVDD_HARD_RESET

0x0000084B PON_RESIN_AND_KPDPWR_RESET_S2_CTL2

Type: RW
Clock: pbus_wrclk
Reset State: 0x00
Reset Name: dVdd_rb

Stage 2 (bite) configuration

PON_RESIN_AND_KPDPWR_RESET_S2_CTL2

Bits	Name	Description
7	S2_RESET_EN	Enable Stage 2 reset Field is synchronized by a 2-stage shift register so, for reliable hardware operation, the minimum time allowed between write operations is 3 sleep clock cycles. 0x0: DISABLED 0x1: ENABLED

0x00000854 PON_PMIC_WD_RESET_S1_TIMER

Type: RW
Clock: pbus_wrclk
Reset State: 0x1F
Reset Name: dVdd_rb

Stage 1 (Bark) Timer. Bark cannot be disabled, but interrupt can be disabled if necessary

PON_PMIC_WD_RESET_S1_TIMER

Bits	Name	Description
6:0	S1_TIMER	Time that the debounced trigger must be held before bark is sent to APQ (seconds) -- 0 - 127 seconds, default 31 seconds. Program hex value of decimal count desired (not binary coded). This is a shadowed field so, for reliable hardware operation, the minimum time allowed between write operations is 5 sleep clock cycles. 0x0: SEC_0 0x1: SEC_1 0x2: SEC_2 0x3: SEC_3 0x4: SEC_4 0x5: SEC_5 0x6: SEC_6 0x7: SEC_7 0x8: SEC_8 0x9: SEC_9 0xA: SEC_10 0xB: SEC_11 0xC: SEC_12 0xD: SEC_13 0xE: SEC_14 0xF: SEC_15 0x10: SEC_16 0x11: SEC_17 0x12: SEC_18 0x13: SEC_19

PON_PMIC_WD_RESET_S1_TIMER (cont.)

Bits	Name	Description
		0x14: SEC_20 0x15: SEC_21 0x16: SEC_22 0x17: SEC_23 0x18: SEC_24 0x19: SEC_25 0x1A: SEC_26 0x1B: SEC_27 0x1C: SEC_28 0x1D: SEC_29 0x1E: SEC_30 0x1F: SEC_31 0x20: SEC_32 0x21: SEC_33 0x22: SEC_34 0x23: SEC_35 0x24: SEC_36 0x25: SEC_37 0x26: SEC_38 0x27: SEC_39 0x28: SEC_40 0x29: SEC_41 0x2A: SEC_42 0x2B: SEC_43 0x2C: SEC_44 0x2D: SEC_45 0x2E: SEC_46 0x2F: SEC_47 0x30: SEC_48 0x31: SEC_49 0x32: SEC_50 0x33: SEC_51 0x34: SEC_52 0x35: SEC_53 0x36: SEC_54 0x37: SEC_55 0x38: SEC_56 0x39: SEC_57 0x3A: SEC_58 0x3B: SEC_59 0x3C: SEC_60 0x3D: SEC_61 0x3E: SEC_62 0x3F: SEC_63 0x40: SEC_64

PON_PMIC_WD_RESET_S1_TIMER (cont.)

Bits	Name	Description
		0x41: SEC_65 0x42: SEC_66 0x43: SEC_67 0x44: SEC_68 0x45: SEC_69 0x46: SEC_70 0x47: SEC_71 0x48: SEC_72 0x49: SEC_73 0x4A: SEC_74 0x4B: SEC_75 0x4C: SEC_76 0x4D: SEC_77 0x4E: SEC_78 0x4F: SEC_79 0x50: SEC_80 0x51: SEC_81 0x52: SEC_82 0x53: SEC_83 0x54: SEC_84 0x55: SEC_85 0x56: SEC_86 0x57: SEC_87 0x58: SEC_88 0x59: SEC_89 0x5A: SEC_90 0x5B: SEC_91 0x5C: SEC_92 0x5D: SEC_93 0x5E: SEC_94 0x5F: SEC_95 0x60: SEC_96 0x61: SEC_97 0x62: SEC_98 0x63: SEC_99 0x64: SEC_100 0x65: SEC_101 0x66: SEC_102 0x67: SEC_103 0x68: SEC_104 0x69: SEC_105 0x6A: SEC_106 0x6B: SEC_107 0x6C: SEC_108 0x6D: SEC_109 0x6E: SEC_110

PON_PMIC_WD_RESET_S1_TIMER (cont.)

Bits	Name	Description
		0x6F: SEC_111 0x70: SEC_112 0x71: SEC_113 0x72: SEC_114 0x73: SEC_115 0x74: SEC_116 0x75: SEC_117 0x76: SEC_118 0x77: SEC_119 0x78: SEC_120 0x79: SEC_121 0x7A: SEC_122 0x7B: SEC_123 0x7C: SEC_124 0x7D: SEC_125 0x7E: SEC_126 0x7F: SEC_127

0x00000855 PON_PMIC_WD_RESET_S2_TIMER

Type: RW
Clock: pbus_wrclk
Reset State: 0x01
Reset Name: dVdd_rb

Stage 2 (bite) configuration

PON_PMIC_WD_RESET_S2_TIMER

Bits	Name	Description
6:0	S2_TIMER	Time that debounced trigger must be held before S2 reset occurs -- 0 - 127 seconds (default = 32 seconds). Program hex value of decimal count desired (Not binary coded). Timer starts after WD bark expires This is a shadowed field so, for reliable hardware operation, the minimum time allowed between write operations is 5 sleep clock cycles. 0x0: SEC_0 0x1: SEC_1 0x2: SEC_2 0x3: SEC_3 0x4: SEC_4 0x5: SEC_5 0x6: SEC_6 0x7: SEC_7 0x8: SEC_8 0x9: SEC_9 0xA: SEC_10 0xB: SEC_11 0xC: SEC_12 0xD: SEC_13 0xE: SEC_14 0xF: SEC_15 0x10: SEC_16 0x11: SEC_17 0x12: SEC_18 0x13: SEC_19

PON_PMIC_WD_RESET_S2_TIMER (cont.)

Bits	Name	Description
		0x14: SEC_20 0x15: SEC_21 0x16: SEC_22 0x17: SEC_23 0x18: SEC_24 0x19: SEC_25 0x1A: SEC_26 0x1B: SEC_27 0x1C: SEC_28 0x1D: SEC_29 0x1E: SEC_30 0x1F: SEC_31 0x20: SEC_32 0x21: SEC_33 0x22: SEC_34 0x23: SEC_35 0x24: SEC_36 0x25: SEC_37 0x26: SEC_38 0x27: SEC_39 0x28: SEC_40 0x29: SEC_41 0x2A: SEC_42 0x2B: SEC_43 0x2C: SEC_44 0x2D: SEC_45 0x2E: SEC_46 0x2F: SEC_47 0x30: SEC_48 0x31: SEC_49 0x32: SEC_50 0x33: SEC_51 0x34: SEC_52 0x35: SEC_53 0x36: SEC_54 0x37: SEC_55 0x38: SEC_56 0x39: SEC_57 0x3A: SEC_58 0x3B: SEC_59 0x3C: SEC_60 0x3D: SEC_61 0x3E: SEC_62 0x3F: SEC_63 0x40: SEC_64

PON_PMIC_WD_RESET_S2_TIMER (cont.)

Bits	Name	Description
		0x41: SEC_65 0x42: SEC_66 0x43: SEC_67 0x44: SEC_68 0x45: SEC_69 0x46: SEC_70 0x47: SEC_71 0x48: SEC_72 0x49: SEC_73 0x4A: SEC_74 0x4B: SEC_75 0x4C: SEC_76 0x4D: SEC_77 0x4E: SEC_78 0x4F: SEC_79 0x50: SEC_80 0x51: SEC_81 0x52: SEC_82 0x53: SEC_83 0x54: SEC_84 0x55: SEC_85 0x56: SEC_86 0x57: SEC_87 0x58: SEC_88 0x59: SEC_89 0x5A: SEC_90 0x5B: SEC_91 0x5C: SEC_92 0x5D: SEC_93 0x5E: SEC_94 0x5F: SEC_95 0x60: SEC_96 0x61: SEC_97 0x62: SEC_98 0x63: SEC_99 0x64: SEC_100 0x65: SEC_101 0x66: SEC_102 0x67: SEC_103 0x68: SEC_104 0x69: SEC_105 0x6A: SEC_106 0x6B: SEC_107 0x6C: SEC_108 0x6D: SEC_109 0x6E: SEC_110

PON_PMIC_WD_RESET_S2_TIMER (cont.)

Bits	Name	Description
		0x6F: SEC_111 0x70: SEC_112 0x71: SEC_113 0x72: SEC_114 0x73: SEC_115 0x74: SEC_116 0x75: SEC_117 0x76: SEC_118 0x77: SEC_119 0x78: SEC_120 0x79: SEC_121 0x7A: SEC_122 0x7B: SEC_123 0x7C: SEC_124 0x7D: SEC_125 0x7E: SEC_126 0x7F: SEC_127

0x00000856 PON_PMIC_WD_RESET_S2_CTL

Type: RW
Clock: pbus_wrclk
Reset State: 0x06
Reset Name: dVdd_rb

Stage 2 (bite) configuration. This register can only be written when PMIC_WD_LOCK field is 0x0.

PON_PMIC_WD_RESET_S2_CTL

Bits	Name	Description
3:0	RESET_TYPE	This field can only be updated when block is disabled (i.e. 8 sleep clock cycles after writing 0 to S2_RESET_EN field). 0x0: RESERVED0 0x1: WARM_RESET 0x2: IMMEDIATE_XVDD_SHUTDOWN 0x3: RESERVED3 0x4: SHUTDOWN 0x5: DVDD_SHUTDOWN 0x6: XVDD_SHUTDOWN 0x7: HARD_RESET 0x8: DVDD_HARD_RESET 0x9: XVDD_HARD_RESET 0xA: WARM_RESET_AND_DVDD_SHUTDOWN 0xB: WARM_RESET_AND_XVDD_SHUTDOWN 0xC: WARM_RESET_AND_SHUTDOWN 0xD: WARM_RESET_THEN_HARD_RESET 0xE: WARM_RESET_THEN_DVDD_HARD_RESET 0xF: WARM_RESET_THEN_XVDD_HARD_RESET

0x00000857 PON_PMIC_WD_RESET_S2_CTL2

Type: RW
Clock: pbus_wrclk
Reset State: 0x00
Reset Name: dVdd_rb

Stage 2 (bite) configuration. This register can only be written when PMIC_WD_LOCK field is 0x0.

PON_PMIC_WD_RESET_S2_CTL2

Bits	Name	Description
7	S2_RESET_EN	Enable Stage 2 reset Field is synchronized by a 2-stage shift register so, for reliable hardware operation, the minimum time allowed between write operations is 3 sleep clock cycles. 0x0: DISABLED 0x1: ENABLED

0x00000858 PON_PMIC_WD_RESET_PET

Type: W
Clock: pbus_wrclk
Reset State: 0x00
Reset Name: dVdd_rb

Stage 2 (bite) configuration

PON_PMIC_WD_RESET_PET

Bits	Name	Description
0	WATCHDOG_PET	Writing '1' to this bit will clear the PMIC WD timer. Writing '0' has no effect. This is a synchronized field so, for reliable hardware operation, the minimum time allowed between write operations is 5 sleep clock cycles. 0x1: PET_WD

0x0000085A PON_PS_HOLD_RESET_CTL

Type: RW
Clock: pbus_wrclk
Reset State: 0x04
Reset Name: dVdd_rb

PON_PS_HOLD_RESET_CTL

Bits	Name	Description
3:0	RESET_TYPE	This is a shadowed field so, for reliable hardware operation, the minimum time allowed between write operations is 8 sleep clock cycles. 0x0: RESERVED0 0x1: WARM_RESET 0x2: IMMEDIATE_XVDD_SHUTDOWN 0x3: RESERVED3 0x4: SHUTDOWN 0x5: DVDD_SHUTDOWN 0x6: XVDD_SHUTDOWN 0x7: HARD_RESET 0x8: DVDD_HARD_RESET 0x9: XVDD_HARD_RESET 0xA: WARM_RESET_AND_DVDD_SHUTDOWN 0xB: WARM_RESET_AND_XVDD_SHUTDOWN 0xC: WARM_RESET_AND_SHUTDOWN 0xD: WARM_RESET_THEN_HARD_RESET 0xE: WARM_RESET_THEN_DVDD_HARD_RESET 0xF: WARM_RESET_THEN_XVDD_HARD_RESET

0x0000085B PON_PS_HOLD_RESET_CTL2

Type: RW
Clock: pbus_wrclk
Reset State: 0x80
Reset Name: dVdd_rb

PON_PS_HOLD_RESET_CTL2

Bits	Name	Description
7	S2_RESET_EN	Enable reset Field is synchronized by a 2-stage shift register so, for reliable hardware operation, the minimum time allowed between write operations is 3 sleep clock cycles. 0x0: DISABLED 0x1: ENABLED

0x00000862 PON_SW_RESET_S2_CTL

Type: RW
Clock: pbus_wrclk
Reset State: 0x00
Reset Name: dVdd_rb

Software initiated shutdown (TFT)

PON_SW_RESET_S2_CTL

Bits	Name	Description
3:0	RESET_TYPE	This field can only be updated when block is disabled (i.e. 8 sleep clock cycles after writing 0 to SW_RESET_EN field). 0x0: SOFT_RESET 0x1: WARM_RESET 0x2: IMMEDIATE_XVDD_SHUTDOWN 0x3: RESERVED3 0x4: SHUTDOWN 0x5: DVDD_SHUTDOWN 0x6: XVDD_SHUTDOWN 0x7: HARD_RESET 0x8: DVDD_HARD_RESET 0x9: XVDD_HARD_RESET 0xA: WARM_RESET_AND_DVDD_SHUTDOWN 0xB: WARM_RESET_AND_XVDD_SHUTDOWN 0xC: WARM_RESET_AND_SHUTDOWN 0xD: WARM_RESET_THEN_HARD_RESET 0xE: WARM_RESET_THEN_DVDD_HARD_RESET 0xF: WARM_RESET_THEN_XVDD_HARD_RESET

0x00000863 PON_SW_RESET_S2_CTL2

Type: RW
Clock: pbus_wrclk
Reset State: 0x00
Reset Name: dVdd_rb

Software initiated shutdown (TFT)

PON_SW_RESET_S2_CTL2

Bits	Name	Description
7	SW_RESET_EN	Enable SW reset Field is synchronized by a 2-stage shift register so, for reliable hardware operation, the minimum time allowed between write operations is 3 sleep clock cycles. 0x0: DISABLED 0x1: ENABLED

0x00000864 PON_SW_RESET_GO

Type: W
Clock: pbus_wrclk
Reset State: 0x00
Reset Name: dVdd_rb

Initiate SW Reset by writing 0xA5 to this register

PON_SW_RESET_GO

Bits	Name	Description
7:0	SW_RESET_GO	Initiate SW Reset by writing 0xA5 to this register This is a synchronized field so, for reliable hardware operation, the minimum time allowed between write operations is 5 sleep clock cycles.

0x00000866 PON_OVERTEMP_RESET_CTL

Type: RW
Clock: pbus_wrclk
Reset State: 0x04
Reset Name: dVdd_rb

Over temperature stage 3 plus charger FLCB stage 2 reset/shutdown control.

Note: For safety reasons, only shutdown and hard reset events are supported by the overtemp reset trigger.

PON_OVERTEMP_RESET_CTL

Bits	Name	Description
3:0	RESET_TYPE	This field can only be updated when block is disabled (i.e. 8 sleep clock cycles after writing 0 to S2_RESET_EN field). 0x0: RESERVED0 0x1: RESERVED1 0x2: IMMEDIATE_XVDD_SHUTDOWN 0x3: RESERVED3 0x4: SHUTDOWN 0x5: DVDD_SHUTDOWN 0x6: XVDD_SHUTDOWN 0x7: HARD_RESET 0x8: DVDD_HARD_RESET 0x9: XVDD_HARD_RESET 0xA: RESERVED10 0xB: RESERVED11 0xC: RESERVED12 0xD: RESERVED13 0xE: RESERVED14 0xF: RESERVED15

0x00000867 PON_OVERTEMP_RESET_CTL2

Type: RW
Clock: pbus_wrclk
Reset State: 0x80
Reset Name: dVdd_rb

Over temperature stage 3 plus charger FLCB stage 2 reset/shutdown control.

PON_OVERTEMP_RESET_CTL2

Bits	Name	Description
7	S2_RESET_EN	Enable stage 2 reset Field is synchronized by a 2-stage shift register so, for reliable hardware operation, the minimum time allowed between write operations is 3 sleep clock cycles. 0x0: DISABLED 0x1: ENABLED

0x00000870 PON_PULL_CTL

Type: RW
Clock: pbus_wrclk
Reset State: 0x0F
Reset Name: soft_dVdd_rb

PON_PULL_CTL

Bits	Name	Description
3	PON1_PD_EN	0x0: PD_DISABLED 0x1: PD_ENABLED
2	CBLPWR_N_PU_EN	0x0: PD_DISABLED 0x1: PD_ENABLED
1	KPDPWR_N_PU_EN	0x0: PD_DISABLED 0x1: PD_ENABLED
0	RESIN_N_PU_EN	0x0: PD_DISABLED 0x1: PD_ENABLED

0x00000871 PON_DEBOUNCE_CTL

Type: RW
Clock: pbus_wrclk
Reset State: 0x00
Reset Name: dVdd_rb

PON_DEBOUNCE_CTL

Bits	Name	Description
2:0	DEBOUNCE	KPD/CBL/GP_DLY/RESIN/RESIN_AND_KPD/GP1/GP2: Time delay for KPD, CBL, General Purpose PON, RESIN, RESIN_AND_KPD, GP1 and GP2 state change interrupt and triggering. Delay = (1/1024)* 2^ (x+4) This is a shadowed field so, for reliable hardware operation, the minimum time allowed between write operations is 5 sleep clock cycles. 0x0: MS_15P6 0x1: MS_31P2 0x2: MS_62P5 0x3: MS_125 0x4: MS_250 0x5: MS_500 0x6: MS_1000 0x7: MS_2000

0x00000874 PON_RESET_S3_SRC

Type: RW
Clock: pbus_wrclk
Reset State: 0x03
Reset Name: dVdd_rb

Choose source for stage 3 (Full Complete Shutdown). This is a write once register.

PMIC_WRITE_ONCE

PON_RESET_S3_SRC

Bits	Name	Description
1:0	RESET_S3_SOURCE	00: KPDPWR_N 01: RESIN_N 10: KPDPWR_N and RESIN_N both need to be asserted 11: either KPDPWR_N or RESIN_N This is a shadowed field so, for reliable hardware operation, the minimum time allowed between write operations is 5 sleep clock cycles.

0x00000875 PON_RESET_S3_TIMER

Type: RW
Clock: pbus_wrclk
Reset State: 0x04
Reset Name: dVdd_rb

Time trigger must be held before S3 reset occurs (seconds)

PMIC_LOCKED=SEC_ACCESS

PON_RESET_S3_TIMER

Bits	Name	Description
2:0	S3_TIMER	Time trigger must be held before S3 reset occurs. 000: Instant, else 2^(x) seconds (2 to 128) for 50kHz LFRC For 32kHz LFRC 0: instant 1: 3.1s 2: 6.1s 3: 12.2s 4: 24.2s 5: 48.8s 6: 97.7s 7: 195.3s This is a shadowed field so for reliable hardware operation the minimum time allowed between write operations is 5 sleep clock cycles. 0x0: IMMEDIATE 0x1: SEC_2 0x2: SEC_4 0x3: SEC_8 0x4: SEC_16 0x5: SEC_32 0x6: SEC_64 0x7: SEC_128

0x00000880 PON_PON_TRIGGER_EN

Type: RW
Clock: pbus_wrclk
Reset State: 0xFE
Reset Name: soft_dVdd_rb

Power on trigger enables.

Each field is synchronized by a 2-stage shift register so, for reliable hardware operation, the minimum time allowed between write operations is 3 sleep clock cycles.

PON_PON_TRIGGER_EN

Bits	Name	Description
7	KPDPWR_N	Enable PON trigger for new KPDPWR press 0x0: DISABLED 0x1: ENABLED
6	CBLPWR_N	Enable PON trigger for CBL_PWR_N 0x0: DISABLED 0x1: ENABLED

PON_PON_TRIGGER_EN (cont.)

Bits	Name	Description
5	PON1	Enable PON trigger for PON1 0x0: DISABLED 0x1: ENABLED
4	USB_CHG	Enable PON trigger for USB CHG 0x0: DISABLED 0x1: ENABLED
3	DC_CHG	Enable PON trigger for DC CHG 0x0: DISABLED 0x1: ENABLED
2	RTC	Enable PON trigger for RTC 0x0: DISABLED 0x1: ENABLED
1	SMPL	Enable PON trigger for SMPL 0x0: DISABLED 0x1: ENABLED

0x00000883 PON_WATCHDOG_LOCK

Type: RW
Clock: pbus_wrclk
Reset State: 0x00
Reset Name: shutdown2_rb

Write Once register that is reset at the end of the shutdown sequence

PMIC_WRITE_ONCE

PON_WATCHDOG_LOCK

Bits	Name	Description
7	PMIC_WD_LOCK	This is a write once register. '1' then PMIC_WD_RESET_S2_CTL is locked and the contents can no longer be modified. If '0' the register is programmable. 0x0: WD_UNLOCKED 0x1: WD_LOCKED

0x00000888 PON_UVLO

Type: RW
Clock: pbus_wrclk
Reset State: 0x05
Reset Name: soft_dVdd_rb

UVLO Delay

PON_UVLO

Bits	Name	Description
2:0	UVLO_DLY	Time delay for UVLO detection. if X = 0 then delay = 0, else delay = (1/1024) seconds * 2 ^(X-1) where X = value of bits <2:0> This is a shadowed field so, for reliable hardware operation, the minimum time allowed between write operations is 5 sleep clock cycles. 0x0: IMMEDIATE 0x1: MSEC_0P98 0x2: MSEC_1P95 0x3: MSEC_3P91 0x4: MSEC_7P81 0x5: MSEC_15P63 0x6: MSEC_31P25 0x7: MSEC_62P5

0x0000088A PON_AVDD_VPH

Type: RW
Clock: pbus_wrclk
Reset State: 0x30
Reset Name: perph_rb

Control for AVDD

PON_AVDD_VPH

Bits	Name	Description
5	AVDD_HPM_EN	1' = Enable LDO HPM, '0' = LDO LPM 0x0: LPM 0x1: HPM
4	AVDD_REF_OVR	aVdd regulator Reference Adjust Override 0 - aVdd regulator switches it's voltage reference to the PMIC MBG when MBG_OK = 1. If MBG_OK = 0, aVdd regulator uses the internal pon mini-bg as a voltage reference 1 - aVdd regulator always uses the internal pon mini-bg as a voltage reference 0x0: AUTO 0x1: FORCE_MINI_BG

0x0000088C RESERVED

0x0000088D RESERVED

0x0000088E RESERVED

0x0000088F RESERVED

0x00000890 PON_PON1_INTERFACE

Type: RW
Clock: pbus_wrclk
Reset State: 0x00
Reset Name: shutdown2_rb

PON module interface signaling.

PON_PON1_INTERFACE

Bits	Name	Description
7	PON_OUT	Field drives primary PMIC PON output buffer input. 0x0: LOW 0x1: HIGH

0x00000891 PON_PBS_INTERFACE

Type: RW
Clock: pbus_wrclk
Reset State: 0x00
Reset Name: shutdown2_rb

PON module interface signaling.

PON_PBS_INTERFACE

Bits	Name	Description
6	ACK_NACK	write 0x01 to ACK the PON module, write 0x00 to NACK the PON module. A NACK will cause the PMIC to shutdown. This is a synchronized field so, for reliable hardware operation, the minimum time allowed between write operations is 5 sleep clock cycles. 0x0: NACK 0x1: ACK

0x00000894 PON_FSM_CTL

Type: RW
Clock: pbus_wrclk
Reset State: 0x00
Reset Name: dVdd_rb

PON_FSM_CTL

Bits	Name	Description
3:0	SEL_FSM	Select FSM to observe in FSM_STATE register field. The selected FSM state can be read 5 sleep clock cycles after this field is written. 0 - keypad and reset-in shutdown/reset FSM state 1 - reset-in shutdown/reset FSM state 2 - keypad shutdown/reset FSM state 3 - gp1 shutdown/reset FSM state 4 - gp2 shutdown/reset FSM state 5 - watchdog shutdown/reset FSM state 6 - otst3 shutdown/reset FSM state 7 - tft shutdown/reset FSM state 8 - software shutdown/reset FSM state 9 - ps_hold shutdown/reset FSM state 10 - charger shutdown/reset FSM state 11 - power on sequencer FSM state 12 - {2'b00,dVdd trim copy FSM state} This is a synchronized field so, for reliable hardware operation, the minimum time allowed between write operations is 5 sleep clock cycles.

0x00000895 PON_FSM_STATUS

Type: R
Clock: pbus_wrclk
Reset State: 0x00000000
Reset Name: N/A

Stage 2 shutdown/reset FSM state and power on sequencer FSM state

PON_FSM_STATUS

Bits	Name	Description
3:0	FSM_STATE	DEF: X

7 MISC_PM8916

0x00000900 - 0x00000903 **RESERVED**

0x0000094A MISC_TX_GTR_THRES_CTL

Type: RW
Clock: PBUS_WRCLK
Reset State: 0x00
Reset Name: PERPH_RB

MISC_TX_GTR_THRES_CTL

Bits	Name	Description
7	TX_GTR_THRES_REG	A signal sent by modem to indicate that a high power GSM transmit is about to happen (~100us before PA on ramp starts). It is de-asserted when the Tx transmit is over. 0x1: GSM_TRANSMIT 0x0: TRANSMIT_OVER

8 VREF_LPDDR

0x00000A00 - RESERVED
0x00000A03

0x00000A08 VREFLPDDR_STATUS1

Type: R
Clock: PBUS_WRCLK
Reset State: 0x00
Reset Name: N/A

Status Registers

VREFLPDDR_STATUS1

Bits	Name	Description
7	VREF_OK	0 = VREF_LPDDR2_PERPH_EN is low 1 = VREF_LPDDR2_PERPH_EN is high
6	VREF_LPDDR_OK	0 = VREF is disabled 1 = VREF is enabled (PERPH_EN & (REF_EN | (FWE2 & HE2) | (FWE1 & HE2)))

0x00000A44 VREFLPDDR_VREF_LPDDR2_EN

Type: RW
Clock: PBUS_WRCLK
Reset State: 0x80
Reset Name: PERPH_RB

If any of the conditions below are true, the block is on provided that the PERPH_EN is set

VREFLPDDR_VREF_LPDDR2_EN

Bits	Name	Description
7	REF_EN	Enable the reference.

VREFLPDDR_VREF_LPDDR2_EN (cont.)

Bits	Name	Description
1	FOLLOW_HW_EN2	Enable the reference if the external HW_EN is set (Typically connects to sleep_b)
0	FOLLOW_HW_EN1	Enable the reference if the external HW_EN is set (Typically connects to VREG_OK from LPDDR regulator)

0x00000A46 VREFLPDDR_EN_CTL1

Type: RW
Clock: PBUS_WRCLK
Reset State: 0x00
Reset Name: PERPH_RB

VREFLPDDR_EN_CTL1

Bits	Name	Description
7	PERPH_EN	LPDDR Reference Enable 0 = Block is forcefully shut down 1 = Reference state is controlled by individual enable controls

9 LBC_CHGR

0x00001004 LBC_CHGR_PERPH_TYPE

Type: R
Clock: PBUS_WRCLK
Reset State: 0x02
Reset Name: N/A

Peripheral Type

LBC_CHGR_PERPH_TYPE

Bits	Name	Description
7:0	TYPE	CHARGER 0x1: CHARGER

0x00001005 LBC_CHGR_PERPH_SUBTYPE

Type: R
Clock: PBUS_WRCLK
Reset State: 0x15
Reset Name: N/A

Peripheral SubType

LBC_CHGR_PERPH_SUBTYPE

Bits	Name	Description
7:0	SUBTYPE	LIN_CHGR 0x15: LIN_CHGR

0x00001008 LBC_CHGR_CHG_OPTION

Type: R
Clock: PBUS_WRCLK
Reset State: 0x00000000
Reset Name: N/A

Status Registers

LBC_CHGR_CHG_OPTION

Bits	Name	Description
7	PIN	DEF: X Charger option pin status: 0: GND-ed: The system is using an ext. charger 1: Floating: The system is using PMIC internal charger 0x0: EXT_CHARGER 0x1: PMIC_CHARGER

0x00001009 LBC_CHGR_CHG_STATUS

Type: R
Clock: PBUS_WRCLK
Reset State: 0x00000000
Reset Name: N/A

LBC_CHGR_CHG_STATUS

Bits	Name	Description
4	THERM_LOOP	DEF: X 0 : not in THERM_LOOP 1: in THERM_LOOP 0x0: NOT_IN_THERM_LOOP 0x1: IN_THERM_LOOP
3	VIN_MIN_LOOP	DEF: X 0 : not in VIN_MIN_LOOP 1: in VIN_MIN_LOOP 0x0: NOT_IN_VIN_MIN_LOOP 0x1: IN_VIN_MIN_LOOP
2	ICHG_LOOP	DEF: X 0 : not in ICHG_LOOP 1: in ICHG_LOOP 0x0: NOT_IN_ICHG_LOOP 0x1: IN_ICHG_LOOP
1	VDD_LOOP	DEF: X 0 : not in VDD_LOOP 1: in VDD_LOOP 0x0: NOT_IN_VDD_LOOP 0x1: IN_VDD_LOOP

LBC_CHGR_CHG_STATUS (cont.)

Bits	Name	Description
0	CHG_ON	DEF: X 0 : not charging 1 : charging 0x0: NOT_CHARGING 0x1: CHARGING

0x0000100A LBC_CHGR_ATC_STATUS

Type: R
Clock: PBUS_WRCLK
Reset State: 0x00000000
Reset Name: N/A

LBC_CHGR_ATC_STATUS

Bits	Name	Description
7	ATC_DONE	DEF: X If '1', ATC (auto trickle charging) has completed successfully 0x0: ATC_NOT_DONE 0x1: ATC_DONE
4	ATC_FAILED	DEF: X If '1', ATC (auto trickle charging) has failed 0x0: ATC_NOT_FAILED 0x1: ATC_FAILED

0x0000100B LBC_CHGR_VBAT_STATUS

Type: R
Clock: PBUS_WRCLK
Reset State: 0x00000000
Reset Name: N/A

LBC_CHGR_VBAT_STATUS

Bits	Name	Description
6	ABOVE_VBATDET_LO	DEF: X VBAT is above the VBATDET_Lo threshold (VDD_MAX - 5%) 0x0: BELOW_VBATDET_LO 0x1: ABOVE_VBATDET_LO
1	ABOVE_VBAT_WEAK	DEF: X VBAT is above the VBAT_WEAK threshold (set by LBC_CHGR_VBAT_WEAK register) 0x0: BELOW_VBAT_WEAK 0x1: ABOVE_VBAT_WEAK

LBC_CHGR_VBAT_STATUS (cont.)

Bits	Name	Description
0	ABOVE_VBAT_TRKL	DEF: X VBAT is above the VBAT_TRKL threshold (set by LBC_CHGR_VBAT_TRKL register) 0x0: BELOW_VBAT_TRKL 0x1: ABOVE_VBAT_TRKL

0x00001010 LBC_CHGR_INT_RT_STS

Type: R
Clock: PBUS_WRCLK
Reset State: 0x00
Reset Name: PERPH_rb

Interrupt Real Time Status Bits

LBC_CHGR_INT_RT_STS

Bits	Name	Description
7	CHG_DONE_RT_STS	0x0: INT_RT_STS_LOW 0x1: INT_RT_STS_HIGH
6	CHG_FAILED_RT_STS	0x0: INT_RT_STS_LOW 0x1: INT_RT_STS_HIGH
5	FAST_CHG_ON_RT_STS	0x0: INT_RT_STS_LOW 0x1: INT_RT_STS_HIGH
0	VBAT_DET_LO_RT_STS	0x0: INT_RT_STS_LOW 0x1: INT_RT_STS_HIGH

0x00001011 LBC_CHGR_INT_SET_TYPE

Type: RW
Clock: PBUS_WRCLK
Reset State: 0x00
Reset Name: PERPH_rb

Sets interrupt trigger type:

0 = (High/Low) Level triggered

1 = (Rising/Falling/Both) Edge triggered

LBC_CHGR_INT_SET_TYPE

Bits	Name	Description
7	CHG_DONE_SET_TYPE	0x0: LEVEL 0x1: EDGE
6	CHG_FAILED_SET_TYPE	0x0: LEVEL 0x1: EDGE
5	FAST_CHG_ON_SET_TYPE	0x0: LEVEL 0x1: EDGE
0	VBAT_DET_LO_SET_TYPE	0x0: LEVEL 0x1: EDGE

0x00001012 LBC_CHGR_INT_POLARITY_HIGH

Type: RW
Clock: PBUS_WRCLK
Reset State: 0x00
Reset Name: PERPH_rb

Sets interrupt trigger condition:

0 = Interrupt will NOT trigger on a High-Level or Rising-Edge event

1 = Interrupt will trigger on a High-Level or Rising-Edge event

LBC_CHGR_INT_POLARITY_HIGH

Bits	Name	Description
7	CHG_DONE_POLARITY_HIGH	0x0: HIGH_RISING_TRIGGER_DISABLED 0x1: HIGH_RISING_TRIGGER_ENABLED
6	CHG_FAILED_POLARITY_HIGH	0x0: HIGH_RISING_TRIGGER_DISABLED 0x1: HIGH_RISING_TRIGGER_ENABLED
5	FAST_CHG_ON_POLARITY_HIGH	0x0: HIGH_RISING_TRIGGER_DISABLED 0x1: HIGH_RISING_TRIGGER_ENABLED
0	VBAT_DET_LO_POLARITY_HIGH	0x0: HIGH_RISING_TRIGGER_DISABLED 0x1: HIGH_RISING_TRIGGER_ENABLED

0x00001013 LBC_CHGR_INT_POLARITY_LOW

Type: RW
Clock: PBUS_WRCLK
Reset State: 0x00
Reset Name: PERPH_rb

Sets interrupt trigger condition:

0 = Interrupt will NOT trigger on a Low-Level or Falling-Edge event

1 = Interrupt will trigger on a Low-Level or Falling-Edge event

LBC_CHGR_INT_POLARITY_LOW

Bits	Name	Description
7	CHG_DONE_POLARITY_LOW	0x0: LOW_FALLING_TRIGGER_DISABLED 0x1: LOW_FALLING_TRIGGER_ENABLED
6	CHG_FAILED_POLARITY_LOW	0x0: LOW_FALLING_TRIGGER_DISABLED 0x1: LOW_FALLING_TRIGGER_ENABLED
5	FAST_CHG_ON_POLARITY_LOW	0x0: LOW_FALLING_TRIGGER_DISABLED 0x1: LOW_FALLING_TRIGGER_ENABLED
0	VBAT_DET_LO_POLARITY_LOW	0x0: LOW_FALLING_TRIGGER_DISABLED 0x1: LOW_FALLING_TRIGGER_ENABLED

0x00001014 LBC_CHGR_INT_LATCHED_CLR

Type: W
Clock: PBUS_WRCLK
Reset State: 0x00
Reset Name: PERPH_rb

Clears latched interrupt:

Writing a '1' to this interrupt will rearm the interrupt when an interrupt is pending. It clears the internal sticky and sent bits.

LBC_CHGR_INT_LATCHED_CLR

Bits	Name	Description
7	CHG_DONE_LATCHED_CLR	
6	CHG_FAILED_LATCHED_CLR	
5	FAST_CHG_ON_LATCHED_CLR	
0	VBAT_DET_LO_LATCHED_CLR	

0x00001015 LBC_CHGR_INT_EN_SET

Type: RW
Clock: PBUS_WRCLK
Reset State: 0x00
Reset Name: PERPH_rb

Interrupt Enable:

- Writing 0 to this register has no effect.
- Writing a 1 will enable the corresponding interrupt.
- Reading this register will read back enable status.

LBC_CHGR_INT_EN_SET

Bits	Name	Description
7	CHG_DONE_EN_SET	0x0: INT_DISABLED 0x1: INT_ENABLED
6	CHG_FAILED_EN_SET	0x0: INT_DISABLED 0x1: INT_ENABLED
5	FAST_CHG_ON_EN_SET	0x0: INT_DISABLED 0x1: INT_ENABLED
0	VBAT_DET_LO_EN_SET	0x0: INT_DISABLED 0x1: INT_ENABLED

0x00001016 LBC_CHGR_INT_EN_CLR

Type: RW
Clock: PBUS_WRCLK
Reset State: 0x00
Reset Name: PERPH_rb

Interrupt Enable Clear:

- Writing 0 to this register has no effect.
- Writing a 1 will disable the corresponding interrupt.
- Reading this register will read back enable status

LBC_CHGR_INT_EN_CLR

Bits	Name	Description
7	CHG_DONE_EN_CLR	0x0: INT_DISABLED 0x1: INT_ENABLED
6	CHG_FAILED_EN_CLR	0x0: INT_DISABLED 0x1: INT_ENABLED
5	FAST_CHG_ON_EN_CLR	0x0: INT_DISABLED 0x1: INT_ENABLED
0	VBAT_DET_LO_EN_CLR	0x0: INT_DISABLED 0x1: INT_ENABLED

0x00001018 LBC_CHGR_INT_LATCHED_STS

Type: R
Clock: PBUS_WRCLK
Reset State: 0x00
Reset Name: PERPH_rb

Latched (Sticky) Interrupt status.

- '1' indicates that the interrupt has triggered.

- Once the latched bit is set it can only be cleared by writing the _INT_LATCHED_CLR bit.

LBC_CHGR_INT_LATCHED_STS

Bits	Name	Description
7	CHG_DONE_LATCHED_STS	0x0: NO_INT_LATCHED 0x1: INT_LATCHED
6	CHG_FAILED_LATCHED_STS	0x0: NO_INT_LATCHED 0x1: INT_LATCHED
5	FAST_CHG_ON_LATCHED_STS	0x0: NO_INT_LATCHED 0x1: INT_LATCHED
0	VBAT_DET_LO_LATCHED_STS	0x0: NO_INT_LATCHED 0x1: INT_LATCHED

0x00001019 LBC_CHGR_INT_PENDING_STS

Type: R
Clock: PBUS_WRCLK
Reset State: 0x00
Reset Name: PERPH_rb

Interrupt Pending status:

- '1' indicates the interrupt has been sent but not cleared.

LBC_CHGR_INT_PENDING_STS

Bits	Name	Description
7	CHG_DONE_PENDING_STS	0x0: NO_INT_PENDING 0x1: INT_PENDING
6	CHG_FAILED_PENDING_STS	0x0: NO_INT_PENDING 0x1: INT_PENDING
5	FAST_CHG_ON_PENDING_STS	0x0: NO_INT_PENDING 0x1: INT_PENDING

LBC_CHGR_INT_PENDING_STS (cont.)

Bits	Name	Description
0	VBAT_DET_LO_PENDING_STS	0x0: NO_INT_PENDING 0x1: INT_PENDING

0x0000101A LBC_CHGR_INT_MID_SEL

Type: RW
Clock: PBUS_WRCLK
Reset State: 0x00
Reset Name: PERPH_rb

Selects the MID that will receive the interrupt

LBC_CHGR_INT_MID_SEL

Bits	Name	Description
1:0	INT_MID_SEL	0x0: MID0 0x1: MID1 0x2: MID2 0x3: MID3

0x0000101B LBC_CHGR_INT_PRIORITY

Type: RW
Clock: PBUS_WRCLK
Reset State: 0x00
Reset Name: PERPH_rb

Reserved for peripheral-level priority setting

LBC_CHGR_INT_PRIORITY

Bits	Name	Description
0	INT_PRIORITY	0x0: SR 0x1: A

0x00001040 LBC_CHGR_VDD_MAX

Type: RW
Clock: PBUS_WRCLK
Reset State: 0x08
Reset Name: PERPH_rb

LBC_CHGR_VDD_MAX

Bits	Name	Description
4:0	SEL	The end voltage Battery charging voltage It's also the voltage that the lbc regulates to when the battery is gone V = 4.0V + X * 25mV, X = 0, 1, .., 31 0x0: VDD_MAX_4P0V 0x1: VDD_MAX_4P025V 0x2: VDD_MAX_4P05V 0x3: VDD_MAX_4P075V 0x4: VDD_MAX_4P1V 0x5: VDD_MAX_4P125V 0x6: VDD_MAX_4P15V 0x7: VDD_MAX_4P175V 0x8: VDD_MAX_4P2V 0x9: VDD_MAX_4P225V 0xA: VDD_MAX_4P25V 0xB: VDD_MAX_4P275V 0xC: VDD_MAX_4P3V 0xD: VDD_MAX_4P325V 0xE: VDD_MAX_4P35V 0xF: VDD_MAX_4P375V 0x10: VDD_MAX_4P4V 0x11: VDD_MAX_4P425V 0x12: VDD_MAX_4P45V 0x13: VDD_MAX_4P475V 0x14: VDD_MAX_4P5V 0x15: VDD_MAX_4P525V 0x16: VDD_MAX_4P55V 0x17: VDD_MAX_4P575V 0x18: VDD_MAX_4P6V 0x19: VDD_MAX_4P625V 0x1A: VDD_MAX_4P65V 0x1B: VDD_MAX_4P675V 0x1C: VDD_MAX_4P7V 0x1D: VDD_MAX_4P725V 0x1E: VDD_MAX_4P75V 0x1F: VDD_MAX_4P775V

0x00001041 LBC_CHGR_VDD_SAFE

Type: RW
Clock: PBUS_WRCLK
Reset State: 0x08
Reset Name: PERPH_rb

LBC_CHGR_VDD_SAFE

Bits	Name	Description
4:0	SEL	The safe limit for VDD_MAX. VDD_MAX values higher than VDD_SAFE are ignored. V = 4.0V + X * 25mV, X = 0, 1, .., 31 0x0: VDD_SAFE_4P0V 0x1: VDD_SAFE_4P025V 0x2: VDD_SAFE_4P05V 0x3: VDD_SAFE_4P075V 0x4: VDD_SAFE_4P1V 0x5: VDD_SAFE_4P125V 0x6: VDD_SAFE_4P15V 0x7: VDD_SAFE_4P175V 0x8: VDD_SAFE_4P2V 0x9: VDD_SAFE_4P225V 0xA: VDD_SAFE_4P25V 0xB: VDD_SAFE_4P275V 0xC: VDD_SAFE_4P3V 0xD: VDD_SAFE_4P325V 0xE: VDD_SAFE_4P35V 0xF: VDD_SAFE_4P375V 0x10: VDD_SAFE_4P4V 0x11: VDD_SAFE_4P425V 0x12: VDD_SAFE_4P45V 0x13: VDD_SAFE_4P475V 0x14: VDD_SAFE_4P5V 0x15: VDD_SAFE_4P525V 0x16: VDD_SAFE_4P55V 0x17: VDD_SAFE_4P575V 0x18: VDD_SAFE_4P6V 0x19: VDD_SAFE_4P625V 0x1A: VDD_SAFE_4P65V 0x1B: VDD_SAFE_4P675V 0x1C: VDD_SAFE_4P7V 0x1D: VDD_SAFE_4P725V 0x1E: VDD_SAFE_4P75V 0x1F: VDD_SAFE_4P775V

0x00001043 LBC_CHGR_VDDMAX_GSM_ADJ

Type: RW
Clock: PBUS_WRCLK
Reset State: 0x86
Reset Name: PERPH_rb

LBC_CHGR_VDDMAX_GSM_ADJ

Bits	Name	Description
7	EN	Enables the VDD_MAX adjustment feature 0x0: FEATURE_DISABLED 0x1: FEATURE_ENABLED
6	MUX_SEL	0: select tx_gt_thr input to control when adjustment is applied 1: select gsm_pa_on input to control when adjustment is applied 0x0: TX_GT_THR 0x1: GSM_PA_ON
2:0	SEL	Selects the adjustment size (# of VDD_MAX LSBs to be subtracted) 0x0: ADJ_0MV 0x1: ADJ_25MV 0x2: ADJ_50MV 0x3: ADJ_75MV 0x4: ADJ_100MV 0x5: ADJ_125MV 0x6: ADJ_150MV 0x7: ADJ_175MV

0x00001044 LBC_CHGR_IBAT_MAX

Type: RW
Clock: PBUS_WRCLK
Reset State: 0x00
Reset Name: PERPH_rb

LBC_CHGR_IBAT_MAX

Bits	Name	Description
3:0	SEL	Maximum battery charging current during fast charging I = 90mA + X*90mA, X = 0, 1, .., 15 0x0: IBAT_MAX_90MA 0x1: IBAT_MAX_180MA 0x2: IBAT_MAX_270MA 0x3: IBAT_MAX_360MA 0x4: IBAT_MAX_450MA 0x5: IBAT_MAX_540MA 0x6: IBAT_MAX_630MA 0x7: IBAT_MAX_720MA 0x8: IBAT_MAX_810MA 0x9: IBAT_MAX_900MA 0xA: IBAT_MAX_990MA 0xB: IBAT_MAX_1080MA 0xC: IBAT_MAX_1170MA 0xD: IBAT_MAX_1260MA 0xE: IBAT_MAX_1350MA 0xF: IBAT_MAX_1440MA

0x00001045 LBC_CHGR_IBAT_SAFE

Type: RW
Clock: PBUS_WRCLK
Reset State: 0x0A
Reset Name: PERPH_rb

LBC_CHGR_IBAT_SAFE

Bits	Name	Description
3:0	SEL	The safe limit for IBAT_MAX. IBAT_MAX values higher than IBAT_SAFE are ignored. This register is one-time-writable. I = 90mA + X*90mA, X = 0, 1, .., 15 0x0: IBAT_SAFE_90MA 0x1: IBAT_SAFE_180MA 0x2: IBAT_SAFE_270MA 0x3: IBAT_SAFE_360MA 0x4: IBAT_SAFE_450MA 0x5: IBAT_SAFE_540MA 0x6: IBAT_SAFE_630MA 0x7: IBAT_SAFE_720MA 0x8: IBAT_SAFE_810MA 0x9: IBAT_SAFE_900MA 0xA: IBAT_SAFE_990MA 0xB: IBAT_SAFE_1080MA 0xC: IBAT_SAFE_1170MA 0xD: IBAT_SAFE_1260MA 0xE: IBAT_SAFE_1350MA 0xF: IBAT_SAFE_1440MA

0x00001047 LBC_CHGR_VIN_MIN

Type: RW
Clock: PBUS_WRCLK
Reset State: 0x04
Reset Name: PERPH_rb

LBC_CHGR_VIN_MIN

Bits	Name	Description
4:0	SEL	Selects the minimum input voltage regulation level on USB_IN pin. V = 4.229 mV + X * 26.2 mV, where X = 0, 1, 2,...,31 [4.229 V :26.2 mv: 5.041 V]

0x00001049 LBC_CHGR_CHG_CTRL

Type: RW
Clock: PBUS_WRCLK
Reset State: 0x90
Reset Name: PERPH_rb

LBC_CHGR_CHG_CTRL

Bits	Name	Description
7	CHG_EN	1 = Enables FSM controlled charging BOOT_DONE in the LBC_MISC peripheral must also be set to 1 in order that FSM controlled charging starts 0x0: CHG_DISABLED 0x1: CHG_ENABLED
6	CHG_PAUSE	If FSM is in charging state, it moves to the corr. paused charging state. If not in a charging state, the FSM will not enter a charging sate, until this bit is cleared The pstg_en will respond as if battery temp is out of temp range to charge 0x0: CHG_NOT_PAUSED 0x1: CHG_PAUSED
5	PSTG_EN	Power Stage Enable 0x0: CHG_PSTG_NOT_FORCED_ON 0x1: CHG_PSTG_FORCED_ON
4	FOLLOW_PSTG_EN_FSM	Follow Power Stage Enable from FSM 0x0: IGNORE_PSTG_EN_FROM_FSM 0x1: FOLLOW_PSTG_EN_FROM_FSM
0	ON_BAT_FORCE	0 = allow all battery charging functions 1 = inhibit all battery charging functions Note: the default value of CHG_CHARGE_DIS is set to the inverse of CHG_PWR_EN, which should be connected to the PON module's USBPWR_EN output 0x0: NOT_FORCED_ON_BAT 0x1: FORCED_ON_BAT

0x0000104A LBC_CHGR_CHG_FAILED

Type: W
Clock: PBUS_WRCLK
Reset State: 0x00
Reset Name: PERPH_rb

LBC_CHGR_CHG_FAILED

Bits	Name	Description
7	CLR	Clears CHG_FAILED event. When a failed charging happens (TTRKL_MAX or TCHG_MAX expires), FSM flags CHG_FAILED_IRQ and set a separate CHG_FAILED bit to remember the event. It bars future entry to fast or trickle charge states until SW writes a '1' to this bit. This bit is self clearing.

0x0000104C LBC_CHGR_ATC_FAILED

Type: W
Clock: PBUS_WRCLK
Reset State: 0x00
Reset Name: PERPH_rb

LBC_CHGR_ATC_FAILED

Bits	Name	Description
7	CLR	Clears ATC_FAILED event. When a failed auto trickle charging happens (upon TTRKL_MAX expiration), FSM sets the ATC_FAILED status bit, which bars re-entry into ATC states. The ATC_FAILED flag is cleared by SW writing a '1' to this bit, or upon charger or battery removal. This bit is self clearing.

0x0000104D LBC_CHGR_LED

Type: RW
Clock: PBUS_WRCLK
Reset State: 0x00
Reset Name: PERPH_rb

LBC_CHGR_LED

Bits	Name	Description
1:0	CTRL	00: LED control from Charger FSM during ATC 01: S/W Forces LED ON 1X: LED control from PWM_LPG module 0x0: FSM 0x1: FORCE_ON 0x2: PWM

0x00001050 LBC_CHGR_VBAT_TRKL

Type: RW
Clock: PBUS_WRCLK
Reset State: 0x13
Reset Name: soft_xVdd_rb

LBC_CHGR_VBAT_TRKL

Bits	Name	Description
4:0	SEL	Battery voltage threshold for trickle charging; below which the battery is charged with the linear trickle charger with 90mA (ATC-A) V = 2.5 + X * 15.62mV, X = 0, 1 .., 31 0x0: VBAT_TRKL_2P5V 0x1: VBAT_TRKL_2P51562V 0x2: VBAT_TRKL_2P53124V 0x3: VBAT_TRKL_2P54686V 0x4: VBAT_TRKL_2P56248V 0x5: VBAT_TRKL_2P5781V 0x6: VBAT_TRKL_2P59372V 0x7: VBAT_TRKL_2P60934V 0x8: VBAT_TRKL_2P62496V 0x9: VBAT_TRKL_2P64058V 0xA: VBAT_TRKL_2P6562V 0xB: VBAT_TRKL_2P67182V 0xC: VBAT_TRKL_2P68744V 0xD: VBAT_TRKL_2P70306V 0xE: VBAT_TRKL_2P71868V 0xF: VBAT_TRKL_2P7343V 0x10: VBAT_TRKL_2P74992V 0x11: VBAT_TRKL_2P76554V 0x12: VBAT_TRKL_2P78116V 0x13: VBAT_TRKL_2P79678V 0x14: VBAT_TRKL_2P8124V 0x15: VBAT_TRKL_2P82802V 0x16: VBAT_TRKL_2P84364V 0x17: VBAT_TRKL_2P85926V 0x18: VBAT_TRKL_2P87488V 0x19: VBAT_TRKL_2P8905V 0x1A: VBAT_TRKL_2P90612V 0x1B: VBAT_TRKL_2P92174V 0x1C: VBAT_TRKL_2P93736V 0x1D: VBAT_TRKL_2P95298V 0x1E: VBAT_TRKL_2P9686V 0x1F: VBAT_TRKL_2P98422V

0x00001052 LBC_CHGR_VBAT_WEAK

Type: RW
Clock: PBUS_WRCLK
Reset State: 0x0B
Reset Name: soft_xVdd_rb

LBC_CHGR_VBAT_WEAK

Bits	Name	Description
4:0	SEL	Weak battery voltage threshold; above which system can boot, and fast charging can start V = 3.0 + X * 18.75 mV, X = 0, 1 .., 31 0x0: VBAT_WEAK_3P0V 0x1: VBAT_WEAK_3P01875V 0x2: VBAT_WEAK_3P0375V 0x3: VBAT_WEAK_3P05625V 0x4: VBAT_WEAK_3P075V 0x5: VBAT_WEAK_3P09375V 0x6: VBAT_WEAK_3P1125V 0x7: VBAT_WEAK_3P13125V 0x8: VBAT_WEAK_3P15V 0x9: VBAT_WEAK_3P16875V 0xA: VBAT_WEAK_3P1875V 0xB: VBAT_WEAK_3P20625V 0xC: VBAT_WEAK_3P225V 0xD: VBAT_WEAK_3P24375V 0xE: VBAT_WEAK_3P2625V 0xF: VBAT_WEAK_3P28125V 0x10: VBAT_WEAK_3P3V 0x11: VBAT_WEAK_3P31875V 0x12: VBAT_WEAK_3P3375V 0x13: VBAT_WEAK_3P35625V 0x14: VBAT_WEAK_3P375V 0x15: VBAT_WEAK_3P39375V 0x16: VBAT_WEAK_3P4125V 0x17: VBAT_WEAK_3P43125V 0x18: VBAT_WEAK_3P45V 0x19: VBAT_WEAK_3P46875V 0x1A: VBAT_WEAK_3P4875V 0x1B: VBAT_WEAK_3P50625V 0x1C: VBAT_WEAK_3P525V 0x1D: VBAT_WEAK_3P54375V 0x1E: VBAT_WEAK_3P5625V 0x1F: VBAT_WEAK_3P58125V

0x00001055 LBC_CHGR_IBAT_ATC_B

Type: RW
Clock: PBUS_WRCLK
Reset State: 0x04
Reset Name: soft_xVdd_rb

LBC_CHGR_IBAT_ATC_B

Bits	Name	Description
3:0	SEL	Battery charging current during ATC (auto-trickle-charge) phase B I = 90mA + X*90mA, X = 0, 1, .., 15 0x0: ICHG_ATC_B_90MA 0x1: ICHG_ATC_B_180MA 0x2: ICHG_ATC_B_270MA 0x3: ICHG_ATC_B_360MA 0x4: ICHG_ATC_B_450MA 0x5: ICHG_ATC_B_540MA 0x6: ICHG_ATC_B_630MA 0x7: ICHG_ATC_B_720MA 0x8: ICHG_ATC_B_810MA 0x9: ICHG_ATC_B_900MA 0xA: ICHG_ATC_B_990MA 0xB: ICHG_ATC_B_1080MA 0xC: ICHG_ATC_B_1170MA 0xD: ICHG_ATC_B_1260MA 0xE: ICHG_ATC_B_1350MA 0xF: ICHG_ATC_B_1440MA

0x0000105B LBC_CHGR_IBAT_TERM_CHGR

Type: RW
Clock: PBUS_WRCLK
Reset State: 0x09
Reset Name: soft_xVdd_rb

LBC_CHGR_IBAT_TERM_CHGR

Bits	Name	Description
3	COMP_EN	Enable of the IBAT_TERM analog comparator 0x0: IBAT_TERM_COMP_DISABLED 0x1: IBAT_TERM_COMP_ENABLED
1:0	THR_SEL	This register is not used in the design.Analog EoC current threshold setting. fixed at 7% of IBAT_MAX

0x0000105E LBC_CHGR_TTRKL_MAX_EN

Type: RW
Clock: PBUS_WRCLK
Reset State: 0x80
Reset Name: soft_xVdd_rb

LBC_CHGR_TTRKL_MAX_EN

Bits	Name	Description
7	EN	Enable for trickle charge timer. This timer limits the maximum time for HW-controlled auto trickle charging (ATC). When it expires, FSM stops trickle charging, and flags the ATC_FAILED (if in ATC). 0x0: TTRKL_MAX_DISABLED 0x1: TTRKL_MAX_ENABLED

0x0000105F LBC_CHGR_TTRKL_MAX

Type: RW
Clock: PBUS_WRCLK
Reset State: 0x2B
Reset Name: soft_xVdd_rb

LBC_CHGR_TTRKL_MAX

Bits	Name	Description
6:0	SEL	Maximum time allowed for HW-controlled ATC (auto-trickle-charging). T = (X + 1) minutes, X = 0, 1, .., 63 0x0: TTRKL_MAX_1MIN 0x1: TTRKL_MAX_2MIN 0x2: TTRKL_MAX_3MIN 0x3: TTRKL_MAX_4MIN 0x4: TTRKL_MAX_5MIN 0x5: TTRKL_MAX_6MIN 0x6: TTRKL_MAX_7MIN 0x7: TTRKL_MAX_8MIN 0x8: TTRKL_MAX_9MIN 0x9: TTRKL_MAX_10MIN 0xA: TTRKL_MAX_11MIN 0xB: TTRKL_MAX_12MIN 0xC: TTRKL_MAX_13MIN 0xD: TTRKL_MAX_14MIN 0xE: TTRKL_MAX_15MIN 0xF: TTRKL_MAX_16MIN 0x10: TTRKL_MAX_17MIN 0x11: TTRKL_MAX_18MIN 0x12: TTRKL_MAX_19MIN 0x13: TTRKL_MAX_20MIN 0x14: TTRKL_MAX_21MIN 0x15: TTRKL_MAX_22MIN 0x16: TTRKL_MAX_23MIN 0x17: TTRKL_MAX_24MIN 0x18: TTRKL_MAX_25MIN 0x19: TTRKL_MAX_26MIN 0x1A: TTRKL_MAX_27MIN 0x1B: TTRKL_MAX_28MIN 0x1C: TTRKL_MAX_29MIN 0x1D: TTRKL_MAX_30MIN 0x1E: TTRKL_MAX_31MIN 0x1F: TTRKL_MAX_32MIN 0x20: TTRKL_MAX_33MIN 0x21: TTRKL_MAX_34MIN 0x22: TTRKL_MAX_35MIN 0x23: TTRKL_MAX_36MIN 0x24: TTRKL_MAX_37MIN 0x25: TTRKL_MAX_38MIN 0x26: TTRKL_MAX_39MIN 0x27: TTRKL_MAX_40MIN 0x28: TTRKL_MAX_41MIN

LBC_CHGR_TTRKL_MAX (cont.)

Bits	Name	Description
		0x29: TTRKL_MAX_42MIN 0x2A: TTRKL_MAX_43MIN 0x2B: TTRKL_MAX_44MIN
		0x2C: TTRKL_MAX_45MIN 0x2D: TTRKL_MAX_46MIN 0x2E: TTRKL_MAX_47MIN 0x2F: TTRKL_MAX_48MIN 0x30: TTRKL_MAX_49MIN 0x31: TTRKL_MAX_50MIN 0x31: TTRKL_MAX_50MIN 0x32: TTRKL_MAX_51MIN 0x33: TTRKL_MAX_52MIN 0x34: TTRKL_MAX_53MIN 0x35: TTRKL_MAX_54MIN 0x36: TTRKL_MAX_55MIN 0x37: TTRKL_MAX_56MIN 0x38: TTRKL_MAX_57MIN 0x39: TTRKL_MAX_58MIN 0x3A: TTRKL_MAX_59MIN 0x3B: TTRKL_MAX_60MIN 0x3C: TTRKL_MAX_61MIN 0x3D: TTRKL_MAX_62MIN 0x3E: TTRKL_MAX_63MIN 0x3F: TTRKL_MAX_64MIN

0x00001060 LBC_CHGR_TCHG_MAX_EN

Type: RW
Clock: PBUS_WRCLK
Reset State: 0x80
Reset Name: PERPH_rb

LBC_CHGR_TCHG_MAX_EN

Bits	Name	Description
7	EN	Enable for charge timer This timer limits the maximum total time for fast charging. When it expires, FSM stops fast charging, and flags the CHG_FAILED IRQ. 0x0: TCHG_MAX_DISABLED 0x1: TCHG_MAX_ENABLED

0x00001061 LBC_CHGR_TCHG_MAX

Type: RW
Clock: PBUS_WRCLK
Reset State: 0x1D
Reset Name: PERPH_rb

LBC_CHGR_TCHG_MAX

Bits	Name	Description
6:0	SEL	T = 4 * (X + 1) minutes [range = 4 min to 8 hr 32 min] Maximum total time for fast charging 0x0: TCHG_MAX_4MIN 0x1: TCHG_MAX_8MIN 0x2: TCHG_MAX_12MIN 0x3: TCHG_MAX_16MIN 0x4: TCHG_MAX_20MIN 0x5: TCHG_MAX_24MIN 0x6: TCHG_MAX_28MIN 0x7: TCHG_MAX_32MIN 0x8: TCHG_MAX_36MIN 0x9: TCHG_MAX_40MIN 0xA: TCHG_MAX_44MIN 0xB: TCHG_MAX_48MIN 0xC: TCHG_MAX_52MIN 0xD: TCHG_MAX_56MIN 0xE: TCHG_MAX_60MIN 0xF: TCHG_MAX_64MIN 0x10: TCHG_MAX_68MIN 0x11: TCHG_MAX_72MIN 0x12: TCHG_MAX_76MIN 0x13: TCHG_MAX_80MIN 0x14: TCHG_MAX_84MIN 0x15: TCHG_MAX_88MIN 0x16: TCHG_MAX_92MIN 0x17: TCHG_MAX_96MIN 0x18: TCHG_MAX_100MIN 0x19: TCHG_MAX_104MIN 0x1A: TCHG_MAX_108MIN 0x1B: TCHG_MAX_112MIN 0x1C: TCHG_MAX_116MIN 0x1D: TCHG_MAX_120MIN 0x1E: TCHG_MAX_124MIN 0x1F: TCHG_MAX_128MIN

LBC_CHGR_TCHG_MAX (cont.)

Bits	Name	Description
		0x20: TCHG_MAX_132MIN 0x21: TCHG_MAX_136MIN 0x22: TCHG_MAX_140MIN 0x23: TCHG_MAX_144MIN 0x24: TCHG_MAX_148MIN 0x25: TCHG_MAX_152MIN 0x26: TCHG_MAX_156MIN 0x27: TCHG_MAX_160MIN 0x28: TCHG_MAX_164MIN 0x29: TCHG_MAX_168MIN 0x2A: TCHG_MAX_172MIN 0x2B: TCHG_MAX_176MIN 0x2C: TCHG_MAX_180MIN 0x2D: TCHG_MAX_184MIN 0x2E: TCHG_MAX_188MIN 0x2F: TCHG_MAX_192MIN 0x30: TCHG_MAX_196MIN 0x31: TCHG_MAX_200MIN 0x32: TCHG_MAX_204MIN 0x33: TCHG_MAX_208MIN 0x34: TCHG_MAX_212MIN 0x35: TCHG_MAX_216MIN 0x36: TCHG_MAX_220MIN 0x37: TCHG_MAX_224MIN 0x38: TCHG_MAX_228MIN 0x39: TCHG_MAX_232MIN 0x3A: TCHG_MAX_236MIN 0x3B: TCHG_MAX_240MIN 0x3C: TCHG_MAX_244MIN 0x3D: TCHG_MAX_248MIN 0x3E: TCHG_MAX_252MIN 0x3F: TCHG_MAX_256MIN

0x00001062 LBC_CHGR_CHG_WDOG_TIME

Type: RW
Clock: PBUS_WRCLK
Reset State: 0x09
Reset Name: PERPH_rb

LBC_CHGR_CHG_WDOG_TIME

Bits	Name	Description
6:0	SEL	T = X sec Software initiated charging will stop when this timer expires. Needs to have time set longer than sleep time so that wd doesn't cause unscheduled wakeup. Any write to this register pets the dog (restarts the timer) - in normal software operation, the register should be written periodically such that the timer is not allowed to expire. If the timer expires, then software initiated charging can not resume until this register is written again. 0x0: CHG_WDOG_TIME_0SEC 0x1: CHG_WDOG_TIME_1SEC 0x2: CHG_WDOG_TIME_2SEC 0x3: CHG_WDOG_TIME_3SEC 0x4: CHG_WDOG_TIME_4SEC 0x5: CHG_WDOG_TIME_5SEC 0x6: CHG_WDOG_TIME_6SEC 0x7: CHG_WDOG_TIME_7SEC 0x8: CHG_WDOG_TIME_8SEC 0x9: CHG_WDOG_TIME_9SEC 0xA: CHG_WDOG_TIME_10SEC 0xB: CHG_WDOG_TIME_11SEC 0xC: CHG_WDOG_TIME_12SEC 0xD: CHG_WDOG_TIME_13SEC 0xE: CHG_WDOG_TIME_14SEC 0xF: CHG_WDOG_TIME_15SEC 0x10: CHG_WDOG_TIME_16SEC 0x11: CHG_WDOG_TIME_17SEC 0x12: CHG_WDOG_TIME_18SEC 0x13: CHG_WDOG_TIME_19SEC 0x14: CHG_WDOG_TIME_20SEC 0x15: CHG_WDOG_TIME_21SEC 0x16: CHG_WDOG_TIME_22SEC 0x17: CHG_WDOG_TIME_23SEC 0x18: CHG_WDOG_TIME_24SEC 0x19: CHG_WDOG_TIME_25SEC 0x1A: CHG_WDOG_TIME_26SEC 0x1B: CHG_WDOG_TIME_27SEC 0x1C: CHG_WDOG_TIME_28SEC 0x1D: CHG_WDOG_TIME_29SEC 0x1E: CHG_WDOG_TIME_30SEC 0x1F: CHG_WDOG_TIME_31SEC 0x20: CHG_WDOG_TIME_32SEC 0x21: CHG_WDOG_TIME_33SEC 0x22: CHG_WDOG_TIME_34SEC 0x23: CHG_WDOG_TIME_35SEC

LBC_CHGR_CHG_WDOG_TIME (cont.)

Bits	Name	Description
		0x24: CHG_WDOG_TIME_36SEC 0x25: CHG_WDOG_TIME_37SEC 0x26: CHG_WDOG_TIME_38SEC 0x27: CHG_WDOG_TIME_39SEC 0x28: CHG_WDOG_TIME_40SEC 0x29: CHG_WDOG_TIME_41SEC 0x2A: CHG_WDOG_TIME_42SEC 0x2B: CHG_WDOG_TIME_43SEC 0x2C: CHG_WDOG_TIME_44SEC 0x2D: CHG_WDOG_TIME_45SEC 0x2E: CHG_WDOG_TIME_46SEC 0x2F: CHG_WDOG_TIME_47SEC 0x30: CHG_WDOG_TIME_48SEC 0x31: CHG_WDOG_TIME_49SEC 0x32: CHG_WDOG_TIME_50SEC 0x33: CHG_WDOG_TIME_51SEC 0x34: CHG_WDOG_TIME_52SEC 0x35: CHG_WDOG_TIME_53SEC 0x36: CHG_WDOG_TIME_54SEC 0x37: CHG_WDOG_TIME_55SEC 0x38: CHG_WDOG_TIME_56SEC 0x39: CHG_WDOG_TIME_57SEC 0x3A: CHG_WDOG_TIME_58SEC 0x3B: CHG_WDOG_TIME_59SEC 0x3C: CHG_WDOG_TIME_60SEC 0x3D: CHG_WDOG_TIME_61SEC 0x3E: CHG_WDOG_TIME_62SEC 0x3F: CHG_WDOG_TIME_63SEC 0x40: CHG_WDOG_TIME_64SEC 0x41: CHG_WDOG_TIME_65SEC 0x42: CHG_WDOG_TIME_66SEC 0x43: CHG_WDOG_TIME_67SEC 0x44: CHG_WDOG_TIME_68SEC 0x45: CHG_WDOG_TIME_69SEC 0x46: CHG_WDOG_TIME_70SEC 0x47: CHG_WDOG_TIME_71SEC 0x48: CHG_WDOG_TIME_72SEC 0x49: CHG_WDOG_TIME_73SEC 0x4A: CHG_WDOG_TIME_74SEC 0x4B: CHG_WDOG_TIME_75SEC 0x4C: CHG_WDOG_TIME_76SEC 0x4D: CHG_WDOG_TIME_77SEC 0x4E: CHG_WDOG_TIME_78SEC 0x4F: CHG_WDOG_TIME_79SEC 0x50: CHG_WDOG_TIME_80SEC 0x51: CHG_WDOG_TIME_81SEC

LBC_CHGR_CHG_WDOG_TIME (cont.)

Bits	Name	Description
		0x52: CHG_WDOG_TIME_82SEC 0x53: CHG_WDOG_TIME_83SEC 0x54: CHG_WDOG_TIME_84SEC 0x55: CHG_WDOG_TIME_85SEC 0x56: CHG_WDOG_TIME_86SEC 0x57: CHG_WDOG_TIME_87SEC 0x58: CHG_WDOG_TIME_88SEC 0x5A: CHG_WDOG_TIME_90SEC 0x5B: CHG_WDOG_TIME_91SEC 0x5C: CHG_WDOG_TIME_92SEC 0x5D: CHG_WDOG_TIME_93SEC 0x5E: CHG_WDOG_TIME_94SEC 0x5F: CHG_WDOG_TIME_95SEC 0x60: CHG_WDOG_TIME_96SEC 0x61: CHG_WDOG_TIME_97SEC 0x62: CHG_WDOG_TIME_98SEC 0x63: CHG_WDOG_TIME_99SEC 0x64: CHG_WDOG_TIME_100SEC 0x65: CHG_WDOG_TIME_101SEC 0x66: CHG_WDOG_TIME_102SEC 0x67: CHG_WDOG_TIME_103SEC 0x68: CHG_WDOG_TIME_104SEC 0x69: CHG_WDOG_TIME_105SEC 0x6A: CHG_WDOG_TIME_106SEC 0x6B: CHG_WDOG_TIME_107SEC 0x6C: CHG_WDOG_TIME_108SEC 0x6D: CHG_WDOG_TIME_109SEC 0x6E: CHG_WDOG_TIME_110SEC 0x6F: CHG_WDOG_TIME_111SEC 0x70: CHG_WDOG_TIME_112SEC 0x71: CHG_WDOG_TIME_113SEC 0x72: CHG_WDOG_TIME_114SEC 0x73: CHG_WDOG_TIME_115SEC 0x74: CHG_WDOG_TIME_116SEC 0x75: CHG_WDOG_TIME_117SEC 0x76: CHG_WDOG_TIME_118SEC 0x77: CHG_WDOG_TIME_119SEC 0x78: CHG_WDOG_TIME_120SEC 0x79: CHG_WDOG_TIME_121SEC 0x7A: CHG_WDOG_TIME_122SEC 0x7B: CHG_WDOG_TIME_123SEC 0x7C: CHG_WDOG_TIME_124SEC 0x7D: CHG_WDOG_TIME_125SEC 0x7E: CHG_WDOG_TIME_126SEC 0x7F: CHG_WDOG_TIME_127SEC

0x00001063 LBC_CHGR_CHG_WDOG_DLY

Type: RW
Clock: PBUS_WRCLK
Reset State: 0x50
Reset Name: PERPH_rb

LBC_CHGR_CHG_WDOG_DLY

Bits	Name	Description
6:4	SEL	Delay (sec) between the watchdog interrupt and stopping charging. 0x0: CHG_WDOG_DLY_0SEC 0x1: CHG_WDOG_DLY_1SEC 0x2: CHG_WDOG_DLY_2SEC 0x3: CHG_WDOG_DLY_3SEC 0x4: CHG_WDOG_DLY_4SEC 0x5: CHG_WDOG_DLY_5SEC 0x6: CHG_WDOG_DLY_6SEC 0x7: CHG_WDOG_DLY_7SEC

0x00001064 LBC_CHGR_CHG_WDOG_PET

Type: W
Clock: PBUS_WRCLK
Reset State: 0x00
Reset Name: PERPH_rb

LBC_CHGR_CHG_WDOG_PET

Bits	Name	Description
7	PET	Pet the charger watchdog Any write to this register pets the dog (restarts the timer). In normal operation, SW should write to this register periodically to prevent the timer to expire.

0x00001065 LBC_CHGR_CHG_WDOG_EN

Type: RW
Clock: PBUS_WRCLK
Reset State: 0x00
Reset Name: shutdown2_rb

LBC_CHGR_CHG_WDOG_EN

Bits	Name	Description
7	EN	Enable for charger watchdog timer. This watchdog timer is to ensure the charging control SW is alive while charging. Once enabled, Charger SW needs to periodically 'pet the dog' during any FSM-controlled charging, otherwise the watchdog will 'bark' (generate CHGWDOG interrupt) and eventually 'bite' (stop charging) after a delay of CHG_WDOG_DLY. 0x0: CHG_WDOG_DISABLED 0x1: CHG_WDOG_ENABLED

0x00001069 LBC_CHGR_VBAT_DET_EN

Type: RW
Clock: PBUS_WRCLK
Reset State: 0x01
Reset Name: PERPH_rb

LBC_CHGR_VBAT_DET_EN

Bits	Name	Description
1:0	VBAT_DET_HI_LO_CTRL	00: VBAT_DET_HI/LO comps are disabled 01: VBAT_DET_HI/LO comps are enabled when charger is connected 10: VBAT_DET_HI/LO comps are enabled when PMIC is on and not in sleep, regardless of charger presence 11: VBAT_DET_HI/LO comps are enabled when PMIC is on, regardless of PMIC sleep/awake or charger presence

10 LBC_BAT_IF

0x00001204 LBC_BAT_IF_PERPH_TYPE

Type: R
Clock: PBUS_WRCLK
Reset State: 0x02
Reset Name: N/A

Peripheral Type

LBC_BAT_IF_PERPH_TYPE

Bits	Name	Description
7:0	TYPE	CHARGER 0x2: CHARGER

0x00001205 LBC_BAT_IF_PERPH_SUBTYPE

Type: R
Clock: PBUS_WRCLK
Reset State: 0x16
Reset Name: N/A

Peripheral SubType

LBC_BAT_IF_PERPH_SUBTYPE

Bits	Name	Description
7:0	SUBTYPE	LIN_BAT_IF 0x16: LIN_BAT_IF

0x00001208 LBC_BAT_IF_BAT_PRES_STATUS

Type: R
Clock: PBUS_WRCLK
Reset State: 0x00000000
Reset Name: N/A

Status Registers

LBC_BAT_IF_BAT_PRES_STATUS

Bits	Name	Description
7	BAT_PRES	DEF: X Battery Presence Status: 0x0: BATTERY_GONE 0x1: BATTERY_PRESENT
6	BAT_REMOVED_OFFMODE	DEF: X Battery removal detection during power off: 0x0: BATTERY_NEVER_REMOVED 0x1: BATTERY_WAS_REMOVED
1	BAT_THM_PRES	DEF: X Battery thermistor presence: 0x0: BAT_THM_GONE 0x1: BAT_THM_PRESENT
0	BAT_ID_PRES	DEF: X Battery ID resistor presence: 0x0: BAT_ID_GONE 0x1: BAT_ID_PRESENT

0x00001209 LBC_BAT_IF_BAT_TEMP_STATUS

Type: R
Clock: PBUS_WRCLK
Reset State: 0x00000000
Reset Name: N/A

LBC_BAT_IF_BAT_TEMP_STATUS

Bits	Name	Description
7:6	BAT_TEMP	DEF: X Battery temp status: 0x0: BAT_TEMP_TOO_COLD 0x1: BAT_TEMP_TOO_HOT 0x2: BAT_TEMP_OK 0x3: BAT_TEMP_OK_3

0x0000120A LBC_BAT_IF_VREF_BAT_THM_STATUS

Type: R
Clock: PBUS_WRCLK
Reset State: 0x00000000
Reset Name: N/A

VREF_BAT_THM status register.

- VREF_BAT_THM is turned on by FSM when there is valid charger connected, OR the PMIC is awake (sleep_b high). I.e., FSM by default automatically turns off the VREF_BAT_THM when no charger AND PMIC is in sleep (sleep_b low), to reduce sleep current caused by battery thermistor resistors.

- VREF_BAT_THM can source from the 1.8V VADC LDO if it's on, or from the 1.875V aVdd (a PMIC internal supply) if VADC LDO is off.

LBC_BAT_IF_VREF_BAT_THM_STATUS

Bits	Name	Description
7	VREF_BAT_THM_ON	DEF: X VREF_BAT_THM On/Off status: 0x0: VREF_BAT_THM_OFF 0x1: VREF_BAT_THM_ON
5	SOURCE_AVDD	DEF: X VREF_BAT_THM powered by aVdd: 0x0: NO 0x1: YES
4	SOURCE_VADC	DEF: X VREF_BAT_THM powered by VREG_XOADC (1.8V): 0x0: NO 0x1: YES

0x00001210 LBC_BAT_IF_INT_RT_STS

Type: R
Clock: PBUS_WRCLK
Reset State: 0x00000000
Reset Name: PERPH_rb

Interrupt Real Time Status Bits

LBC_BAT_IF_INT_RT_STS

Bits	Name	Description
1	BAT_TEMP_OK_RT_STS	DEF: X 0x0: INT_RT_STS_LOW 0x1: INT_RT_STS_HIGH

LBC_BAT_IF_INT_RT_STS (cont.)

Bits	Name	Description
0	BAT_PRES_RT_STS	DEF: X 0x0: INT_RT_STS_LOW 0x1: INT_RT_STS_HIGH

0x00001211 LBC_BAT_IF_INT_SET_TYPE

Type: RW
Clock: PBUS_WRCLK
Reset State: 0x00
Reset Name: PERPH_rb

Sets interrupt trigger type:

0 = (High/Low) Level triggered

1 = (Rising/Falling/Both) Edge triggered

LBC_BAT_IF_INT_SET_TYPE

Bits	Name	Description
1	BAT_TEMP_OK_SET_TYPE	0x0: LEVEL 0x1: EDGE
0	BAT_PRES_SET_TYPE	0x0: LEVEL 0x1: EDGE

0x00001212 LBC_BAT_IF_INT_POLARITY_HIGH

Type: RW
Clock: PBUS_WRCLK
Reset State: 0x00
Reset Name: PERPH_rb

Sets interrupt trigger condition:

0 = Interrupt will NOT trigger on a High-Level or Rising-Edge event

1 = Interrupt will trigger on a High-Level or Rising-Edge event

LBC_BAT_IF_INT_POLARITY_HIGH

Bits	Name	Description
1	BAT_TEMP_OK_POLARI-TY_HIGH	0x0: HIGH_RISING_TRIGGER_DISABLED 0x1: HIGH_RISING_TRIGGER_ENABLED

LBC_BAT_IF_INT_POLARITY_HIGH (cont.)

Bits	Name	Description
0	BAT_PRES_POLARI-TY_HIGH	0x0: HIGH_RISING_TRIGGER_DISABLED 0x1: HIGH_RISING_TRIGGER_ENABLED

0x00001213 LBC_BAT_IF_INT_POLARITY_LOW

Type: RW
Clock: PBUS_WRCLK
Reset State: 0x00
Reset Name: PERPH_rb

Sets interrupt trigger condition:

0 = Interrupt will NOT trigger on a Low-Level or Falling-Edge event

1 = Interrupt will trigger on a Low-Level or Falling-Edge event

LBC_BAT_IF_INT_POLARITY_LOW

Bits	Name	Description
1	BAT_TEMP_OK_POLARITY_LOW	0x0: LOW_FALLING_TRIGGER_DISABLED 0x1: LOW_FALLING_TRIGGER_ENABLED
0	BAT_PRES_POLARITY_LOW	0x0: LOW_FALLING_TRIGGER_DISABLED 0x1: LOW_FALLING_TRIGGER_ENABLED

0x00001214 LBC_BAT_IF_INT_LATCHED_CLR

Type: W
Clock: PBUS_WRCLK
Reset State: 0x00
Reset Name: PERPH_rb

Clears latched interrupt:

Writing a '1' to this interrupt will rearm the interrupt when an interrupt is pending. It clears the internal sticky and sent bits.

LBC_BAT_IF_INT_LATCHED_CLR

Bits	Name	Description
1	BAT_TEMP_OK_LATCHED_CLR	
0	BAT_PRES_LATCHED_CLR	

0x00001215 LBC_BAT_IF_INT_EN_SET

Type: RW
Clock: PBUS_WRCLK
Reset State: 0x00
Reset Name: PERPH_rb

Interrupt Enable:

- Writing 0 to this register has no effect.

- Writing a 1 will enable the corresponding interrupt.

- Reading this register will read back enable status.

PMIC_SET_MASK

LBC_BAT_IF_INT_EN_SET

Bits	Name	Description
1	BAT_TEMP_OK_EN_SET	0x0: INT_DISABLED 0x1: INT_ENABLED
0	BAT_PRES_EN_SET	0x0: INT_DISABLED 0x1: INT_ENABLED

0x00001216 LBC_BAT_IF_INT_EN_CLR

Type: RW
Clock: PBUS_WRCLK
Reset State: 0x00
Reset Name: PERPH_rb

Interrupt Enable Clear:

- Writing 0 to this register has no effect.

- Writing a 1 will disable the corresponding interrupt.

- Reading this register will read back enable status

PMIC_CLR_MASK=INT_EN_SET

LBC_BAT_IF_INT_EN_CLR

Bits	Name	Description
1	BAT_TEMP_OK_EN_CLR	0x0: INT_DISABLED 0x1: INT_ENABLED
0	BAT_PRES_EN_CLR	0x0: INT_DISABLED 0x1: INT_ENABLED

0x00001218 LBC_BAT_IF_INT_LATCHED_STS

Type: R
Clock: PBUS_WRCLK
Reset State: 0x00
Reset Name: PERPH_rb

Latched (Sticky) Interrupt status.

- '1' indicates that the interrupt has triggered.

- Once the latched bit is set it can only be cleared by writing the _INT_LATCHED_CLR bit.

LBC_BAT_IF_INT_LATCHED_STS

Bits	Name	Description
1	BAT_-TEMP_OK_LATCHED_STS	0x0: NO_INT_LATCHED 0x1: INT_LATCHED
0	BAT_PRES_LATCHED_STS	0x0: NO_INT_LATCHED 0x1: INT_LATCHED

0x00001219 LBC_BAT_IF_INT_PENDING_STS

Type: R
Clock: PBUS_WRCLK
Reset State: 0x00
Reset Name: PERPH_rb

Interrupt Pending status:

- '1' indicates the interrupt has been sent but not cleared.

LBC_BAT_IF_INT_PENDING_STS

Bits	Name	Description
1	BAT_TEMP_OK_PEND-ING_STS	0x0: NO_INT_PENDING 0x1: INT_PENDING
0	BAT_PRES_PENDING_STS	0x0: NO_INT_PENDING 0x1: INT_PENDING

0x0000121A LBC_BAT_IF_INT_MID_SEL

Type: RW
Clock: PBUS_WRCLK
Reset State: 0x00
Reset Name: PERPH_rb

Selects the MID that will receive the interrupt

LBC_BAT_IF_INT_MID_SEL

Bits	Name	Description
1:0	INT_MID_SEL	0x0: MID0 0x1: MID1 0x2: MID2 0x3: MID3

0x0000121B LBC_BAT_IF_INT_PRIORITY

Type: RW
Clock: PBUS_WRCLK
Reset State: 0x00
Reset Name: PERPH_rb

Reserved for peripheral-level priority setting

LBC_BAT_IF_INT_PRIORITY

Bits	Name	Description
0	INT_PRIORITY	0x0: SR 0x1: A

0x00001248 LBC_BAT_IF_BPD_CTRL

Type: RW
Clock: PBUS_WRCLK
Reset State: 0x0A
Reset Name: soft_xVdd_rb

Enable Battery Presence Detection (BPD)

LBC monitors battery presence by detecting the presence of battery thermistor and/or ID resistor, that is normally inside the battery pack.

LBC can also detect battery removal when PMIC is off by enabling off-mode BPD

LBC_BAT_IF_BPD_CTRL

Bits	Name	Description
3	BPD_OFFMODE_EN	Enables off-mode BPD 0x0: BPD_OFFMODE_DISABLED 0x1: BPD_OFFMODE_ENABLED
2	BATID_BATTHM_B_SEL	Selects input to Off-Mode BPD comparator 0x0: BAT_THM 0x1: BAT_ID

LBC_BAT_IF_BPD_CTRL (cont.)

Bits	Name	Description
1	BAT_THM_EN	Enable BPD based on BAT_THM 0x0: BPD_BAT_THM_DISABLED 0x1: BPD_BAT_THM_ENABLED
0	BAT_ID_EN	Enable BPD based on BAT_ID 0x0: BPD_BAT_ID_DISABLED 0x1: BPD_BAT_ID_ENABLED

0x00001249 LBC_BAT_IF_BTC_CTRL

Type: RW
Clock: PBUS_WRCLK
Reset State: 0x81
Reset Name: soft_xVdd_rb

Battery temperature comparators (BTC) control

LBC_BAT_IF_BTC_CTRL

Bits	Name	Description
7	BAT_TEMP_COMP_EN	Enable Battery Temperature Comparators (BTC): 0x0: BTC_DISABLED 0x1: BTC_ENABLED
1	BAT_TEMP_COLD_THD	Select battery temp COLD threshold as fraction of VREF_BAT_THM: 1: 80 % 0: 70% 0x0: COLD_THD_70_PCT 0x1: COLD_THD_80_PCT
0	BAT_TEMP_HOT_THD	Select battery temp HOT threshold as fraction of VREF_BAT_THM: 1: 35 % 0: 25% 0x0: HOT_THD_25_PCT 0x1: HOT_THD_35_PCT

0x0000124A LBC_BAT_IF_VREF_BAT_THM_CTRL

Type: RW
Clock: PBUS_WRCLK
Reset State: 0x80
Reset Name: soft_xVdd_rb

LBC_BAT_IF_VREF_BAT_THM_CTRL

Bits	Name	Description
7:6	EN	Enable for VREF_BAT_THM: 0X: VREF_BAT_THM is disabled. 10: Enables VREF_BAT_THM, and have it controlled by FSM. VREF_BAT_THM is turned on if a) a charger is connected, or b) PMIC is not in sleep and BPD/BTC is enabled 11: Forces VREF_BAT_THM On 0x0: VREF_BAT_THM_DISABLED 0x1: VREF_BAT_THM_DISABLED_1 0x2: VREF_BAT_THM_ENABLED_FSM 0x3: VREF_BAT_THM_FORCED_ON

0x0000124F LBC_BAT_IF_BAT_REMOVED_OFFMODE

Type: W
Clock: PBUS_WRCLK
Reset State: 0x00
Reset Name: PERPH_rb

LBC_BAT_IF_BAT_REMOVED_OFFMODE

Bits	Name	Description
6	CLR	Clear battery removed offmode status by doing any write to this register address

11 LBC_USB

0x00001304 LBC_USB_PERPH_TYPE

Type: R
Clock: PBUS_WRCLK
Reset State: 0x02
Reset Name: N/A

Peripheral Type

LBC_USB_PERPH_TYPE

Bits	Name	Description
7:0	TYPE	CHARGER 0x2: CHARGER

0x00001305 LBC_USB_PERPH_SUBTYPE

Type: R
Clock: PBUS_WRCLK
Reset State: 0x17
Reset Name: N/A

Peripheral SubType

LBC_USB_PERPH_SUBTYPE

Bits	Name	Description
7:0	SUBTYPE	LIN_USB 0x17: LIN_USB

0x00001308 LBC_USB_PWR_PTH_STS

Type: R
Clock: PBUS_WRCLK
Reset State: 0x00000000
Reset Name: N/A

LBC_USB_PWR_PTH_STS

Bits	Name	Description
1:0	POWER_PATH	DEF: X PMIC power path status: 0x0: NOT_USED 0x1: POWERED_FROM_BATTERY 0x2: POWERED_FROM_USB_CHARGER 0x3: NOT_USED_3

0x00001309 LBC_USB_USB_CHG_PTH_STS

Type: R
Clock: PBUS_WRCLK
Reset State: 0x00000000
Reset Name: N/A

LBC_USB_USB_CHG_PTH_STS

Bits	Name	Description
7:6	USB_VALID	DEF: X USB input voltage status: 0x0: UNDER_VOLTAGE 0x1: OVER_VOLTAGE 0x2: IN_VALID_RANGE 0x3: IN_VALID_RANGE_3
5	ENUM_TIMER_EXP	DEF: X 0x0: ENUM_TIMER_HASNT_EXPIRED 0x1: ENUM_TIMER_EXPIRED
4	USB_COARSE_DET	DEF: X USB input coarse detect status: 0: Below coarse detect threshold (~1.4V) 1: Above coarse detect threshold (~1.4V) 0x0: BELOW_COARSE_DET_THR 0x1: ABOVE_COARSE_DET_THR

0x00001310 LBC_USB_INT_RT_STS

Type: R
Clock: PBUS_WRCLK
Reset State: 0x00
Reset Name: PERPH_rb

Interrupt Real Time Status Bits

LBC_USB_INT_RT_STS

Bits	Name	Description
4	OVERTEMP_RT_STS	0x0: INT_RT_STS_LOW 0x1: INT_RT_STS_HIGH
2	CHG_GONE_RT_STS	0x0: INT_RT_STS_LOW 0x1: INT_RT_STS_HIGH
1	USBIN_VALID_RT_STS	0x0: INT_RT_STS_LOW 0x1: INT_RT_STS_HIGH
0	COARSE_DET_US-B_RT_STS	0x0: INT_RT_STS_LOW 0x1: INT_RT_STS_HIGH

0x00001311 LBC_USB_INT_SET_TYPE

Type: RW
Clock: PBUS_WRCLK
Reset State: 0x00
Reset Name: PERPH_rb

Sets interrupt trigger type:

0 = (High/Low) Level triggered

1 = (Rising/Falling/Both) Edge triggered

LBC_USB_INT_SET_TYPE

Bits	Name	Description
4	OVERTEMP_TYPE	0x0: LEVEL 0x1: EDGE
2	CHG_GONE_TYPE	0x0: LEVEL 0x1: EDGE
1	USBIN_VALID_TYPE	0x0: LEVEL 0x1: EDGE
0	COARSE_DET_USB_TYPE	0x0: LEVEL 0x1: EDGE

0x00001312 LBC_USB_INT_POLARITY_HIGH

Type: RW
Clock: PBUS_WRCLK
Reset State: 0x00
Reset Name: PERPH_rb

Sets interrupt trigger condition:

0 = Interrupt will NOT trigger on a High-Level or Rising-Edge event

1 = Interrupt will trigger on a High-Level or Rising-Edge event

LBC_USB_INT_POLARITY_HIGH

Bits	Name	Description
4	OVERTEMP_HIGH	0x0: HIGH_RISING_TRIGGER_DISABLED 0x1: HIGH_RISING_TRIGGER_ENABLED
2	CHG_GONE_HIGH	0x0: HIGH_RISING_TRIGGER_DISABLED 0x1: HIGH_RISING_TRIGGER_ENABLED
1	USBIN_VALID_HIGH	0x0: HIGH_RISING_TRIGGER_DISABLED 0x1: HIGH_RISING_TRIGGER_ENABLED
0	COARSE_DET_USB_HIGH	0x0: HIGH_RISING_TRIGGER_DISABLED 0x1: HIGH_RISING_TRIGGER_ENABLED

0x00001313 LBC_USB_INT_POLARITY_LOW

Type: RW
Clock: PBUS_WRCLK
Reset State: 0x00
Reset Name: PERPH_rb

Sets interrupt trigger condition:

0 = Interrupt will NOT trigger on a Low-Level or Falling-Edge event

1 = Interrupt will trigger on a Low-Level or Falling-Edge event

LBC_USB_INT_POLARITY_LOW

Bits	Name	Description
4	OVERTEMP_LOW	0x0: LOW_FALLING_TRIGGER_DISABLED 0x1: LOW_FALLING_TRIGGER_ENABLED
2	CHG_GONE_LOW	0x0: LOW_FALLING_TRIGGER_DISABLED 0x1: LOW_FALLING_TRIGGER_ENABLED
1	USBIN_VALID_LOW	0x0: LOW_FALLING_TRIGGER_DISABLED 0x1: LOW_FALLING_TRIGGER_ENABLED

LBC_USB_INT_POLARITY_LOW (cont.)

Bits	Name	Description
0	COARSE_DET_USB_LOW	0x0: LOW_FALLING_TRIGGER_DISABLED 0x1: LOW_FALLING_TRIGGER_ENABLED

0x00001314 LBC_USB_INT_LATCHED_CLR

Type: W
Clock: PBUS_WRCLK
Reset State: 0x00
Reset Name: PERPH_rb

Clears latched interrupt:

Writing a '1' to this interrupt will rearm the interrupt when an interrupt is pending. It clears the internal sticky and sent bits.

LBC_USB_INT_LATCHED_CLR

Bits	Name	Description
4	OVERTEMP_LATCHED_CLR	
2	CHG_GONE_LATCHED_CLR	
1	USBIN_VALID_LATCHED_CLR	
0	COARSE_DET_USB_LATCHED_CLR	

0x00001315 LBC_USB_INT_EN_SET

Type: RW
Clock: PBUS_WRCLK
Reset State: 0x00
Reset Name: PERPH_rb

Interrupt Enable:

- Writing 0 to this register has no effect.
- Writing a 1 will enable the corresponding interrupt.
- Reading this register will read back enable status.

PMIC_SET_MASK

LBC_USB_INT_EN_SET

Bits	Name	Description
4	OVERTEMP_EN_SET	0x0: INT_DISABLED 0x1: INT_ENABLED
2	CHG_GONE_EN_SET	0x0: INT_DISABLED 0x1: INT_ENABLED
1	USBIN_VALID_EN_SET	0x0: INT_DISABLED 0x1: INT_ENABLED
0	COARSE_DET_USB_EN_SET	0x0: INT_DISABLED 0x1: INT_ENABLED

0x00001316 LBC_USB_INT_EN_CLR

Type: RW
Clock: PBUS_WRCLK
Reset State: 0x00
Reset Name: PERPH_rb

Interrupt Enable Clear:

- Writing 0 to this register has no effect.

- Writing a 1 will disable the corresponding interrupt.

- Reading this register will read back enable status

PMIC_CLR_MASK=INT_EN_SET

LBC_USB_INT_EN_CLR

Bits	Name	Description
4	OVERTEMP_EN_CLR	0x0: INT_DISABLED 0x1: INT_ENABLED
2	CHG_GONE_EN_CLR	0x0: INT_DISABLED 0x1: INT_ENABLED
1	USBIN_VALID_EN_CLR	0x0: INT_DISABLED 0x1: INT_ENABLED
0	COARSE_DET_USB_EN_-CLR	0x0: INT_DISABLED 0x1: INT_ENABLED

0x00001318 LBC_USB_INT_LATCHED_STS

Type: R
Clock: PBUS_WRCLK
Reset State: 0x00
Reset Name: PERPH_rb

Latched (Sticky) Interrupt status.

- '1' indicates that the interrupt has triggered.

- Once the latched bit is set it can only be cleared by writing the _INT_LATCHED_CLR bit.

LBC_USB_INT_LATCHED_STS

Bits	Name	Description
4	OVERTEMP_LATCHED_STS	0x0: NO_INT_LATCHED 0x1: INT_LATCHED
2	CHG_GONE_LATCHED_STS	0x0: NO_INT_LATCHED 0x1: INT_LATCHED
1	USBIN_VALID_LATCHED_STS	0x0: NO_INT_LATCHED 0x1: INT_LATCHED
0	COARSE_DET_US-B_LATCHED_STS	0x0: NO_INT_LATCHED 0x1: INT_LATCHED

0x00001319 LBC_USB_INT_PENDING_STS

Type: R
Clock: PBUS_WRCLK
Reset State: 0x00
Reset Name: PERPH_rb

Interrupt Pending status:

- '1' indicates the interrupt has been sent but not cleared.

LBC_USB_INT_PENDING_STS

Bits	Name	Description
4	OVERTEMP_STS	0x0: NO_INT_PENDING 0x1: INT_PENDING
2	CHG_GONE_STS	0x0: NO_INT_PENDING 0x1: INT_PENDING
1	USBIN_VALID_STS	0x0: NO_INT_PENDING 0x1: INT_PENDING

LBC_USB_INT_PENDING_STS (cont.)

Bits	Name	Description
0	COARSE_DET_USB_STS	0x0: NO_INT_PENDING 0x1: INT_PENDING

0x0000131A LBC_USB_INT_MID_SEL

Type: RW
Clock: PBUS_WRCLK
Reset State: 0x00
Reset Name: PERPH_rb

Selects the MID that will receive the interrupt

LBC_USB_INT_MID_SEL

Bits	Name	Description
1:0	INT_MID_SEL	0x0: MID0 0x1: MID1 0x2: MID2 0x3: MID3

0x0000131B LBC_USB_INT_PRIORITY

Type: RW
Clock: PBUS_WRCLK
Reset State: 0x00
Reset Name: PERPH_rb

Reserved for peripheral-level priority setting

LBC_USB_INT_PRIORITY

Bits	Name	Description
0	INT_PRIORITY	0x0: SR 0x1: A

0x00001342 LBC_USB_USB_OVP_CTL

Type: RW
Clock: PBUS_WRCLK
Reset State: 0x01
Reset Name: soft_xVdd_rb

LBC_USB_USB_OVP_CTL

Bits	Name	Description
1:0	USB_VALID_DEB	USB_Valid Debounce Time: 0x0: DEB_0MS 0x1: DEB_4MS 0x2: DEB_10MS 0x3: DEB_20MS

0x00001347 LBC_USB_USB_SUSP

Type: RW
Clock: PBUS_WRCLK
Reset State: 0x00
Reset Name: PERPH_rb

LBC_USB_USB_SUSP

Bits	Name	Description
0	USB_SUSPEND	USB Suspend bit. If set, LBC stops drawing current from USB port by stopping the Charger buck and running system from Battery 0x0: USB_NOT_SUSPENDED 0x1: USB_SUSPENDED

0x0000134E LBC_USB_ENUM_TIMER_STOP

Type: RW
Clock: PBUS_WRCLK
Reset State: 0x00
Reset Name: PERPH_rb

LBC_USB_ENUM_TIMER_STOP

Bits	Name	Description
0	STOP	To stop the ENUM_TIMER, SW has to set this STOP bit. 0x1: ENUM_TIMER_STOP 0x0: ENUM_TIMER_RUN

0x0000134F LBC_USB_ENUM_TIMER

Type: RW
Clock: PBUS_WRCLK
Reset State: 0x03
Reset Name: soft_xVdd_rb

Enumeration Timer

FSM starts this timer to allow for USB charger detection and enumeration.

If USB wall charger (DCP) is detected or USB enumeration (SDP) is successful, SW (PBL or SBL) has to write to the ENUM_TIMER_STOP bit and set IBAT_MAX.

When this timer expires, FSM assumes that USB enumeration has failed or >100mA current has not been granted. It sets the ENUM_TIMER_EXP flag and sets IBAT_MAX = 90mA.

LBC_USB_ENUM_TIMER

Bits	Name	Description
1:0	SEL	Selects ENUM_TIMER duration: 0x0: ENUM_TIMER_30S 0x1: ENUM_TIMER_60S 0x2: ENUM_TIMER_90S 0x3: ENUM_TIMER_120S

12 LBC_MISC

0x00001600 - 0x00001603 RESERVED

0x00001604 LBC_MISC_PERPH_TYPE

Type: R
Clock: PBUS_WRCLK
Reset State: 0x02
Reset Name: N/A

Peripheral Type

LBC_MISC_PERPH_TYPE

Bits	Name	Description
7:0	TYPE	CHARGER 0x2: CHARGER

0x00001605 LBC_MISC_PERPH_SUBTYPE

Type: R
Clock: PBUS_WRCLK
Reset State: 0x18
Reset Name: N/A

Peripheral SubType

LBC_MISC_PERPH_SUBTYPE

Bits	Name	Description
7:0	SUBTYPE	LIN_MISC 0x18: LIN_MISC

0x00001640 LBC_MISC_LOW_POWER_MODE

Type: RW
Clock: PBUS_WRCLK
Reset State: 0x00
Reset Name: PERPH_rb

LBC_MISC_LOW_POWER_MODE

Bits	Name	Description
0	EN	1 = LBC runs on 32khz clock instead of 19.2Mhz clock. Should only be set when running on battery with no charger attached 0 = LBC runs on 19.2Mhz clock Note: when running in Low Power Mode s/w will have slow access to LBC registers (when no charger is attached).Software should only access registers every 120us or greater. 0x0: DIG_LPM_DISABLED 0x1: DIG_LPM_ENABLED

0x00001641 LBC_MISC_BOOT

Type: RW
Clock: PBUS_WRCLK
Reset State: 0x03
Reset Name: soft_xVdd_rb

LBC_MISC_BOOT

Bits	Name	Description
7	BOOT_TIMER_EN	Enable for Boot Timer 0x0: DISABLED 0x1: ENABLED
3	ADAPTIVE_BOOT_DIS	Disable for Adaptive Boot feature 0x1: DISABLED 0x0: ENABLED
2	ADAPTIVE_BOOT_TYPE	0 = increment VBAT_WEAK threshold by 18.75 mV per boot attempt up to 3.4 V 1 = for second and last boot attempt increase VBAT_WEAK threshold to 3.4 V 0x0: INCREASE_VBAT_WEAK_18P75MV 0x1: INCREASE_VBAT_WEAK_TO_3V4
1:0	BOOT_TIMER	Selects Boot Timer duration 0x0: T_30S 0x1: T_60S 0x2: T_90S 0x3: T_120S

0x00001642 LBC_MISC_BOOT_DONE

Type: RW
Clock: PBUS_WRCLK
Reset State: 0x00
Reset Name: PERPH_rb

LBC_MISC_BOOT_DONE

Bits	Name	Description
7	DONE	0 = boot is not complete 1 = software writes a 1 to this bit just before it begins s/w controlled charging, indicating that PBL and SBL have succeeded BOOT_DONE must always be written regardless of BOOT_TIMER_EN value. 0x0: BOOT_NOT_DONE 0x1: BOOT_DONE

0x00001643 LBC_MISC_VBAT_BOOT_THRES

Type: R
Clock: PBUS_WRCLK
Reset State: 0x00000000
Reset Name: N/A

// Move this to MISC (where adaptive boot is)?

LBC_MISC_VBAT_BOOT_THRES

Bits	Name	Description
4:0	STS	DEF: X Battery voltage after a successful boot with a newly charged battery. May be different from VBAT_WEAK due to Adaptive Boot feature. V = 3.00 + X * 18.75mV, X = 0, 1 .., 31 0x0: VBAT_BOOT_3V 0x1: VBAT_BOOT_3P01875V 0x2: VBAT_BOOT_3P0375V 0x3: VBAT_BOOT_3P05625V 0x4: VBAT_BOOT_3P075V 0x5: VBAT_BOOT_3P09375V 0x6: VBAT_BOOT_3P1125V 0x7: VBAT_BOOT_3P13125V 0x8: VBAT_BOOT_3P15V 0x9: VBAT_BOOT_3P16875V 0xA: VBAT_BOOT_3P1875V 0xB: VBAT_BOOT_3P20625V 0xC: VBAT_BOOT_3P225V 0xD: VBAT_BOOT_3P24375V 0xE: VBAT_BOOT_3P2625V 0xF: VBAT_BOOT_3P28125V 0x10: VBAT_BOOT_3P3V 0x11: VBAT_BOOT_3P31875V 0x12: VBAT_BOOT_3P3375V 0x13: VBAT_BOOT_3P35625V 0x14: VBAT_BOOT_3P375V 0x15: VBAT_BOOT_3P39375V 0x16: VBAT_BOOT_3P4125V 0x17: VBAT_BOOT_3P43125V 0x18: VBAT_BOOT_3P45V 0x19: VBAT_BOOT_3P46875V 0x1A: VBAT_BOOT_3P4875V 0x1B: VBAT_BOOT_3P50625V 0x1C: VBAT_BOOT_3P525V 0x1D: VBAT_BOOT_3P54375V 0x1E: VBAT_BOOT_3P5625V 0x1F: VBAT_BOOT_3P58125V

0x00001649 LBC_MISC_CP_CTL

Type: RW
Clock: PBUS_WRCLK
Reset State: 0x00
Reset Name: PERPH_rb

LBC_MISC_CP_CTL

Bits	Name	Description
7	RC_OSC_EN	Pseudo RC OSC enable 0x0: RC_OSC_DISABLED 0x1: RC_OSC_ENABLED
5:4	CP_CLK_SRC	Charge Pump Clock source 0x0: CP_CLK_SRC_19P2MHZ_DIV_2 0x1: CP_CLK_19P2MHZ_DIV_4 0x2: CP_CLK_SRC_RCOSC

0x000016CD LBC_MISC_RAW_XVDD_RB_SCRATCH

Type: RW
Clock: PBUS_WRCLK
Reset State: 0x00
Reset Name: soft_xVdd_rb

LBC_MISC_RAW_XVDD_RB_SCRATCH

Bits	Name	Description
7:0	REG	scratch registers

0x000016CE LBC_MISC_RAW_DVDD_RB_SCRATCH

Type: RW
Clock: PBUS_WRCLK
Reset State: 0x00
Reset Name: soft_raw_dVdd_rb

LBC_MISC_RAW_DVDD_RB_SCRATCH

Bits	Name	Description
7:0	REG	scratch registers

13 BUA_4UICC

0x00001C08 BUA_4UICC_STATUS1

Type: R
Clock: PBUS_WRCLK
Reset State: 0x00000000
Reset Name: N/A

Status Registers

BUA_4UICC_STATUS1

Bits	Name	Description
7	BUA_OK	DEF: X 0 = BUA is disabled 1 = BUA is enabled
6	BATT_GONE_DETECTED	DEF: X 0 = BATT_GONE is low 1 = BATT_GONE is high. MISC module detected battery is gone.

0x00001C09 BUA_4UICC_STATUS2

Type: R
Clock: PBUS_WRCLK
Reset State: 0x00000000
Reset Name: N/A

Status Registers

BUA_4UICC_STATUS2

Bits	Name	Description
3	UICC4_ALARM_DETECTED	DEF: X 0 = UICC4 Alarm Off 1 = UICC4 Alarm Received

BUA_4UICC_STATUS2 (cont.)

Bits	Name	Description
2	UICC3_ALARM_DETECTED	DEF: X 0 = UICC3 Alarm Off 1 = UICC3 Alarm Received
1	UICC2_ALARM_DETECTED	DEF: X 0 = UICC2 Alarm Off 1 = UICC2Alarm Received
0	UICC1_ALARM_DETECTED	DEF: X 0 = UICC1 Alarm Off 1 = UICC1 Alarm Received

0x00001C10 BUA_4UICC_INT_RT_STS

Type: R
Clock: PBUS_WRCLK
Reset State: 0x00000000
Reset Name: PERPH_RB

Interrupt Real Time Status Bits

BUA_4UICC_INT_RT_STS

Bits	Name	Description
4	UICC4_ALARM_STS	DEF: X 0 = No Event 1 = UICC4 Alarm Received and LDO reset
3	UICC3_ALARM_STS	DEF: X 0 = No Event 1 = UICC3 Alarm Received and LDO reset
2	UICC2_ALARM_STS	DEF: X 0 = No Event 1 = UICC2 Alarm Received and LDO reset
1	UICC1_ALARM_STS	DEF: X 0 = No Event 1 = UICC1 Alarm Received and LDO reset
0	BATT_ALARM_STS	DEF: X 0 = Battery Alarm Off 1 = Battery Alarm On (Battery has been removed)

0x00001C11 BUA_4UICC_INT_SET_TYPE

Type: RW
Clock: PBUS_WRCLK
Reset State: 0x00
Reset Name: PERPH_RB

0 = use level trigger interrupts, 1 = use edge trigger interrupts

BUA_4UICC_INT_SET_TYPE

Bits	Name	Description
4	UICC4_ALARM_TYPE	
3	UICC3_ALARM_TYPE	
2	UICC2_ALARM_TYPE	
1	UICC1_ALARM_TYPE	
0	BATT_ALARM_TYPE	

0x00001C12 BUA_4UICC_INT_POLARITY_HIGH

Type: RW
Clock: PBUS_WRCLK
Reset State: 0x00
Reset Name: PERPH_RB

1= Interrupt will trigger on a level high (rising edge) event, 0 = level high triggering is disabled

BUA_4UICC_INT_POLARITY_HIGH

Bits	Name	Description
4	UICC4_ALARM_HIGH	
3	UICC3_ALARM_HIGH	
2	UICC2_ALARM_HIGH	
1	UICC1_ALARM_HIGH	
0	BATT_ALARM_HIGH	

0x00001C13 BUA_4UICC_INT_POLARITY_LOW

Type: RW
Clock: PBUS_WRCLK
Reset State: 0x00
Reset Name: PERPH_RB

1' = Interrupt will trigger on a level low (falling edge) event, '0' = level low triggering is disabled

BUA_4UICC_INT_POLARITY_LOW

Bits	Name	Description
4	UICC4_ALARM_LOW	
3	UICC3_ALARM_LOW	
2	UICC2_ALARM_LOW	
1	UICC1_ALARM_LOW	
0	BATT_ALARM_LOW	

0x00001C14 BUA_4UICC_INT_LATCHED_CLR

Type: W
Clock: PBUS_WRCLK
Reset State: 0x00
Reset Name: PERPH_RB

writing a '1' to this interrupt will rearm the interrupt when an interrupt is pending. It clears the internal sticky and sent bits

BUA_4UICC_INT_LATCHED_CLR

Bits	Name	Description
4	UICC4_ALARM_LATCHED_CLR	
3	UICC3_ALARM_LATCHED_CLR	
2	UICC2_ALARM_LATCHED_CLR	
1	UICC1_ALARM_LATCHED_CLR	
0	BATT_ALARM_LATCHED_CLR	

0x00001C15 BUA_4UICC_INT_EN_SET

Type: RW
Clock: PBUS_WRCLK
Reset State: 0x00
Reset Name: PERPH_RB

writing '0' to this register has no effect. Writing a '1' will enable the corresponding interrupt. Reading this register will readback enable status

PMIC_SET_MASK

BUA_4UICC_INT_EN_SET

Bits	Name	Description
4	UICC4_ALARM_EN_SET	
3	UICC3_ALARM_EN_SET	
2	UICC2_ALARM_EN_SET	
1	UICC1_ALARM_EN_SET	
0	BATT_ALARM_EN_SET	

0x00001C16 BUA_4UICC_INT_EN_CLR

Type: RW
Clock: PBUS_WRCLK
Reset State: 0x00
Reset Name: PERPH_RB

writing '0' to this register has no effect. Writing a '1' will disable the corresponding interrupt. Reading this register will readback enable status

PMIC_CLR_MASK=INT_EN_SET

BUA_4UICC_INT_EN_CLR

Bits	Name	Description
4	UICC4_ALARM_EN_CLR	
3	UICC3_ALARM_EN_CLR	
2	UICC2_ALARM_EN_CLR	
1	UICC1_ALARM_EN_CLR	
0	BATT_ALARM_EN_CLR	

0x00001C18 BUA_4UICC_INT_LATCHED_STS

Type: R
Clock: PBUS_WRCLK
Reset State: 0x00
Reset Name: PERPH_RB

Debug: Latched (Sticky) Interrupt. '1' indicates that the interrupt has triggered. Once the latched bit is set it can only be cleared by writing the clear bit.

BUA_4UICC_INT_LATCHED_STS

Bits	Name	Description
4	UICC4_ALARM_LATCHED_STS	
3	UICC3_ALARM_LATCHED_STS	
2	UICC2_ALARM_LATCHED_STS	
1	UICC1_ALARM_LATCHED_STS	
0	BATT_ALARM_LATCHED_STS	

0x00001C19 BUA_4UICC_INT_PENDING_STS

Type: R
Clock: PBUS_WRCLK
Reset State: 0x00
Reset Name: PERPH_RB

Debug: Pending is set if interrupt has been sent but not cleared.

BUA_4UICC_INT_PENDING_STS

Bits	Name	Description
4	UICC4_ALARM_PENDING_STS	
3	UICC3_ALARM_PENDING_STS	
2	UICC2_ALARM_PENDING_STS	
1	UICC1_ALARM_PENDING_STS	
0	BATT_ALARMPENDING_STS	

0x00001C1A BUA_4UICC_INT_MID_SEL

Type: RW
Clock: PBUS_WRCLK
Reset State: 0x00
Reset Name: PERPH_RB

Selects the MID that will receive the interrupt

BUA_4UICC_INT_MID_SEL

Bits	Name	Description
1:0	INT_MID_SEL	

0x00001C1B BUA_4UICC_INT_PRIORITY

Type: RW
Clock: PBUS_WRCLK
Reset State: 0x00
Reset Name: PERPH_RB

SR=0 A=1

BUA_4UICC_INT_PRIORITY

Bits	Name	Description
0	INT_PRIORITY	

0x00001C40 BUA_4UICC_BUA_CTL1

Type: RW
Clock: PBUS_WRCLK
Reset State: 0x16
Reset Name: PERPH_RB

TBD

BUA_4UICC_BUA_CTL1

Bits	Name	Description
6:4	BATT_RMV_DEB	BAT_GONE debounce timer 3'b000: 0-1 sclk 3'b001: 1-2 sclk (default) 3'b010: 2-3 sclk 3'b011: 5-6 sclk 3'b100: 8-9 sclk 3'b101: 11-12 sclk 3'b110: 15-16 sclk 3'b111: 31-32 sclk
2:0	LDO_SHUTDOWN_DELAY	Programmable delay between Battery removal and start of UICC LDO reset 3'b000 = 2.5 sclk (~76us) 3'b001 = 3.5 sclk (~107us) 3'b010 = 4.5 sclk (~137us) 3'b011 = 5.5 sclk (~168us) 3'b100 = 7.5 sclk (~229us) 3'b101 = 8.5 sclk (~259us) 3'b110 = 9.5 sclk (~290us) (default) 3'b111 = 11.5 sclk (~351us)

0x00001C46 BUA_4UICC_EN_CTL1

Type: RW
Clock: PBUS_WRCLK
Reset State: 0x00
Reset Name: PERPH_RB

BUA_4UICC_EN_CTL1

Bits	Name	Description
7	BUA_EN	BUA enable 0 = BUA is disabled 1 = BUA is enabled

14 TEMP_ALARM

0x00002400 - 0x00002403 RESERVED

0x00002404 TEMP_ALARM_PERPH_TYPE

Type: R
Clock: PBUS_WRCLK
Reset State: 0x09
Reset Name: N/A

Peripheral Type

TEMP_ALARM_PERPH_TYPE

Bits	Name	Description
7:0	TYPE	0x9: ALARM

0x00002405 TEMP_ALARM_PERPH_SUBTYPE

Type: R
Clock: PBUS_WRCLK
Reset State: 0x08
Reset Name: N/A

Peripheral SubType

TEMP_ALARM_PERPH_SUBTYPE

Bits	Name	Description
7:0	SUBTYPE	0x8: TEMP_ALARM

0x00002408 TEMP_ALARM_STATUS1

Type: R
Clock: PBUS_WRCLK
Reset State: 0x00
Reset Name: N/A

Status Registers

TEMP_ALARM_STATUS1

Bits	Name	Description
7	TEMP_ALARM_OK	1: TEMP ALARM enabled 0: TEMP ALARM disabled 0x0: TEMP_ALARM_DISABLED 0x1: TEMP_ALARM_ENABLED
3	ST3_SHUTDOWN_STS	Writing 1 to ST3_SHUTDOWN_CLR clears this bit 0x0: NO_EVENT 0x1: ST3_EVENT_OCCURRED
2	ST2_SHUTDOWN_STS	Writing 1 to ST2_SHUTDOWN_CLR clears this bit 0x0: NO_EVENT 0x1: ST2_EVENT_OCCURRED
1:0	TEMP_ALARM_FSM_STATE	TEMP_ALARM_FSM_STATE 0x0: STAGE_0 0x1: STAGE_1 0x2: STAGE_2 0x3: STAGE_3

0x00002410 TEMP_ALARM_INT_RT_STS

Type: R
Clock: PBUS_WRCLK
Reset State: 0x00
Reset Name: N/A

Interrupt Real Time Status Bits

TEMP_ALARM_INT_RT_STS

Bits	Name	Description
0	TEMP_ALARM_RT_STS	0x0: INT_RT_STATUS_LOW 0x1: INT_RT_STATUS_HIGH

0x00002411 TEMP_ALARM_INT_SET_TYPE

Type: RW
Clock: PBUS_WRCLK
Reset State: 0x00
Reset Name: PERPH_RB

0 = use level trigger interrupts, 1 = use edge trigger interrupts

TEMP_ALARM_INT_SET_TYPE

Bits	Name	Description
0	TEMP_ALARM_TYPE	0x0: LEVEL 0x1: EDGE

0x00002412 TEMP_ALARM_INT_POLARITY_HIGH

Type: RW
Clock: PBUS_WRCLK
Reset State: 0x00
Reset Name: PERPH_RB

1= Interrupt will trigger on a level high (rising edge) event, 0 = level high triggering is disabled

TEMP_ALARM_INT_POLARITY_HIGH

Bits	Name	Description
0	TEMP_ALARM_HIGH	0x0: HIGH_TRIGGER_DISABLED 0x1: HIGH_TRIGGER_ENABLED

0x00002413 TEMP_ALARM_INT_POLARITY_LOW

Type: RW
Clock: PBUS_WRCLK
Reset State: 0x00
Reset Name: PERPH_RB

1' = Interrupt will trigger on a level low (falling edge) event, '0' = level low triggering is disabled

TEMP_ALARM_INT_POLARITY_LOW

Bits	Name	Description
0	TEMP_ALARM_LOW	0x0: LOW_TRIGGER_DISABLED 0x1: LOW_TRIGGER_ENABLED

0x00002414 TEMP_ALARM_INT_LATCHED_CLR

Type: W
Clock: PBUS_WRCLK
Reset State: 0x00
Reset Name: PERPH_RB

writing a '1' to this interrupt will rearm the interrupt when an interrupt is pending. It clears the internal sticky and sent bits

TEMP_ALARM_INT_LATCHED_CLR

Bits	Name	Description
0	TEMP_ALARM_LATCHED_CLR	

0x00002415 TEMP_ALARM_INT_EN_SET

Type: RW
Clock: PBUS_WRCLK
Reset State: 0x00
Reset Name: PERPH_RB

writing '0' to this register has no effect. Writing a '1' will enable the corresponding interrupt. Reading this register will readback enable status

PMIC_SET_MASK

TEMP_ALARM_INT_EN_SET

Bits	Name	Description
0	TEMP_ALARM_EN_SET	0x0: INT_DISABLED 0x1: INT_ENABLED

0x00002416 TEMP_ALARM_INT_EN_CLR

Type: RW
Clock: PBUS_WRCLK
Reset State: 0x00
Reset Name: PERPH_RB

writing '0' to this register has no effect. Writing a '1' will disable the corresponding interrupt. Reading this register will readback enable status

PMIC_CLR_MASK=INT_EN_SET

TEMP_ALARM_INT_EN_CLR

Bits	Name	Description
0	TEMP_ALARM_EN_CLR	0x0: INT_DISABLED 0x1: INT_ENABLED

0x00002418 TEMP_ALARM_INT_LATCHED_STS

Type: R
Clock: PBUS_WRCLK
Reset State: 0x00
Reset Name: N/A

Debug: Latched (Sticky) Interrupt. '1' indicates that the interrupt has triggered. Once the latched bit is set it can only be cleared by writing the clear bit.

TEMP_ALARM_INT_LATCHED_STS

Bits	Name	Description
0	TEMP_ALARM_LATCHED_STS	0x0: NO_INT_LATCHED 0x1: INTERRUPT_LATCHED

0x00002419 TEMP_ALARM_INT_PENDING_STS

Type: R
Clock: PBUS_WRCLK
Reset State: 0x00
Reset Name: N/A

Debug: Pending is set if interrupt has been sent but not cleared.

TEMP_ALARM_INT_PENDING_STS

Bits	Name	Description
0	TEMP_ALARM_PENDING_STS	0x0: NO_INT_PENDING 0x1: INTERRUPT_PENDING

0x0000241A TEMP_ALARM_INT_MID_SEL

Type: RW
Clock: PBUS_WRCLK
Reset State: 0x00
Reset Name: PERPH_RB

Selects the MID that will receive the interrupt

TEMP_ALARM_INT_MID_SEL

Bits	Name	Description
1:0	INT_MID_SEL	0x0: MID0 0x1: MID1 0x2: MID2 0x3: MID3

0x0000241B TEMP_ALARM_INT_PRIORITY

Type: RW
Clock: PBUS_WRCLK
Reset State: 0x00
Reset Name: PERPH_RB

TEMP_ALARM_INT_PRIORITY

Bits	Name	Description
0	INT_PRIORITY	0x0: SR 0x1: A

0x00002440 TEMP_ALARM_SHUTDOWN_CTL1

Type: RW
Clock: PBUS_WRCLK
Reset State: 0x01
Reset Name: PERPH_RB

TEMP_ALARM_SHUTDOWN_CTL1

Bits	Name	Description
7	OVRD_ST3_EN	OVRD_ST3_EN : Override automatic shutdown in stage 3 0x0: NO_OVERRIDE 0x1: OVERTEMP_SHUTDOWN_BLOCKED
6	OVRD_ST2_EN	OVRD_ST2_EN : Override partial automatic shutdown in stage 2 0x0: NO_OVERRIDE 0x1: OVERTEMP_SHUTDOWN_BLOCKED
1:0	TEMP_THRESH_CNTRL	TEMP_THRESH_CNTRL: THRESH_STAGE1_STAGE2_STAGE3 0x0: THRESH_105C_125C_145C 0x1: THRESH_110C_130C_150C 0x2: THRESH_115C_135C_155C 0x3: THRESH_120C_140C_160C

0x00002442 TEMP_ALARM_SHUTDOWN_CTL2

Type: W
Clock: PBUS_WRCLK
Reset State: 0x00
Reset Name: PERPH_RB

TEMP_ALARM_SHUTDOWN_CTL2

Bits	Name	Description
7	ST3_SHUTDOWN_CLR	writing 1 clears ST3_SHUTDOWN_STS bit
6	ST2_SHUTDOWN_CLR	writing 1 clears ST2_SHUTDOWN_STS bit

0x00002446 TEMP_ALARM_EN_CTL1

Type: RW
Clock: PBUS_WRCLK
Reset State: 0x01
Reset Name: PERPH_RB

TEMP_ALARM_EN_CTL1

Bits	Name	Description
7	TEMP_ALARM_EN	0x0: TEMP_ALARM_DISABLED 0x1: TEMP_ALARM_FORCED_ON
0	FOLLOW_TEMP_ALARM_HW_EN	0x0: TEMP_ALARM_DISABLED 0x1: TEMP_ALARM_FOLLOWS_HW_EN

15 COIN_COINCELL

0x00002800 - 0x00002803 RESERVED

0x00002804 COIN_PERPH_TYPE

Type: R
Clock: PBUS_WRCLK
Reset State: 0x02
Reset Name: N/A

Peripheral Type

COIN_PERPH_TYPE

Bits	Name	Description
7:0	TYPE	0x2: CHARGER

0x00002805 COIN_PERPH_SUBTYPE

Type: R
Clock: PBUS_WRCLK
Reset State: 0x20
Reset Name: N/A

Peripheral SubType

COIN_PERPH_SUBTYPE

Bits	Name	Description
7:0	SUBTYPE	0x20: COINCELL

0x00002808 COIN_STATUS1

Type: R
Clock: PBUS_WRCLK
Reset State: 0x00
Reset Name: N/A

Status Registers

COIN_STATUS1

Bits	Name	Description
7	COINCELL_OK	0 = coincell is disabled 1 = coincell is enabled 0x0: CC_DISABLED 0x1: CC_ENABLED

0x00002844 COIN_COIN_CHG_RSET

Type: RW
Clock: PBUS_WRCLK
Reset State: 0x00
Reset Name: soft_xVdd_rb

Set Coincell Charge Current

COIN_COIN_CHG_RSET

Bits	Name	Description
1:0	COIN_CHG_RSET	sets the coin cell charger current limiting resistor value 0 = 2.1k ohm 1 = 1.7k ohm 2 = 1.2k ohm 3 = 800 ohm 0x0: CC_RSET_2K1 0x1: CC_RSET_1K7 0x2: CC_RSET_1K2 0x3: CC_RSET_0K8

0x00002845 COIN_COIN_CHG_VSET

Type: RW
Clock: PBUS_WRCLK
Reset State: 0x00
Reset Name: soft_xVdd_rb

Set Coincell Charge Voltage

COIN_COIN_CHG_VSET

Bits	Name	Description
1:0	COIN_CHG_VSET	sets the coin cell charging voltage 0 = 2.5V 1 = 3.2V 2 = 3.1V 3 = 3.0V 0x0: CC_VSET_2V5 0x1: CC_VSET_3V2 0x2: CC_VSET_3V1 0x3: CC_VSET_3V0

0x00002846 COIN_EN_CTL

Type: RW
Clock: PBUS_WRCLK
Reset State: 0x00
Reset Name: soft_xVdd_rb

COIN_EN_CTL

Bits	Name	Description
7	COINCELL_EN	1 = Enable the Coincell, 0 = Disable the coincell 0x0: CC_DISABLED 0x1: CC_ENABLED

16 MBG1_DIG

0x00002C00 - RESERVED
0x00002C03

0x00002C04 MBG1_PERPH_TYPE

Type: R
Clock: PBUS_WRCLK
Reset State: 0x0E
Reset Name: n/a

Peripheral Type

MBG1_PERPH_TYPE

Bits	Name	Description
7:0	TYPE	0xE: MBG

0x00002C08 MBG1_STATUS1

Type: R
Clock: PBUS_WRCLK
Reset State: 0x00000000
Reset Name: n/a

Status Registers

MBG1_STATUS1

Bits	Name	Description
7	MBG_OK	DEF: X 1= MBG has started up and the Vref1p25 is charged up to at least vbg_pon level 0x0: MBG_NOT_OK 0x1: MBG_OK

MBG1_STATUS1 (cont.)

Bits	Name	Description
1	NPM_TRUE	DEF: X 1 = MBG is on and in NPM 0x0: MBG_LPM 0x1: MBG_NPM

0x00002C44 MBG1_MODE_CTRL

Type: RW
Clock: PBUS_WRCLK
Reset State: 0x91
Reset Name: perph_rb

MBG1_MODE_CTRL

Bits	Name	Description
7	FORCE_NPM	Force NPM whenever this bit is set 0x0: NO_FORCE_LPM 0x1: FORCE_NPM
4	NPM_FOLLOW_SLEEPB	1' = transition to NPM, whenever PMIC is awake, '0' = LPM (IPTAT_EN and IREF_EN must be set 0x0: NO_FOLLOW 0x1: FOLLOW_SLEEP_B
3	FORCE_FASTVBG	set this bit high will force fast charge mode always on instead of the auto mode controlled by the MBG_OK signal. 0x0: NORMAL_MODE 0x1: FORCE_FAST_VBG
2	FORCE_MBGCC_EN	set this bit high will force the curvature correction block on in both normal mode and sleep mode if Iref and Iptat is available 0x0: CC_DISABLED 0x1: CC_ENABLED
1	FORCE_IPTAT_EN	set this bit high will force the IPTAT block on in sleep mode 0x0: NO_FORCE_IPTAT 0x1: FORCE_IPTAT
0	FORCE_IREF_EN	set this bit high will force Iref block on in sleep mode 0x0: NO_FORCE_IREF 0x1: FORCE_IREF

0x00002C46 MBG1_EN_CTL

Type: RW
Clock: PBUS_WRCLK
Reset State: 0x00
Reset Name: perph_rb

MBG1_EN_CTL

Bits	Name	Description
7	MBG_EN	this bit is one of the multiple MBG_EN signals that are from different sources and ORed together to control the ON/OFF of MBG block 0x0: MBG_DISABLED 0x1: MBG_ENABLED

17 VADC1_LC_USR_VADC

0x00003100 - 0x00003103 RESERVED

0x00003104 VADC1_LC_USR_PERPH_TYPE

Type: R
Clock: pbus_wrclk
Reset State: 0x08
Reset Name: N/A

Peripheral Type

PMIC_CONSTANT

VADC1_LC_USR_PERPH_TYPE

Bits	Name	Description
7:0	TYPE	ADC

0x00003105 VADC1_LC_USR_PERPH_SUBTYPE

Type: R
Clock: pbus_wrclk
Reset State: 0x09
Reset Name: N/A

Peripheral SubType

VADC1_LC_USR_PERPH_SUBTYPE

Bits	Name	Description
7:0	SUBTYPE	ADC sub type

0x00003108 VADC1_LC_USR_STATUS1

Type: R
Clock: pbus_wrclk
Reset State: 0x01
Reset Name: N/A

Status Registers

VADC1_LC_USR_STATUS1

Bits	Name	Description
4:3	OP_MODE	Selects basic mode of operation 0x0: NORM_MODE 0x1: CONV_SEQ_MODE 0x2: MEAS_INT_MODE
2	MEAS_INTERVAL_EN_STS	Interval Mode 0x0: INTERVAL_MODE_DISABLED 0x1: INTERVAL_MODE_ENABLED
1	REQ_STS	REQ_STS mirrors the REQ bit. When REQ is asserted the arbiter stores a descriptor in the conversion request queue. Bit is cleared when ADC conversion is completed. 0x0: REQ_NOT_IN_PROGRESS 0x1: REQ_IN_PROGRESS
0	EOC	End of conversion status flag. Bit is de-asserted when arbiter is servicing a conversion request and asserted when conversion is completed. After a conversion is requested, the EOC and REQ_STS bits can be polled to determine ADC conversion status as follows: REQ_STS EOC Arbiter state 1 1 Waiting for ADC to complete another process's conversion request. 1 0 ADC conversion occurring. 0 1 ADC conversion completed. 0 0 Invalid 0x0: CONV_NOT_COMPLETE 0x1: CONV_COMPLETE

0x00003109 VADC1_LC_USR_STATUS2

Type: R
Clock: pbus_wrclk
Reset State: 0x00
Reset Name: N/A

Status Registers

VADC1_LC_USR_STATUS2

Bits	Name	Description
7:3	CONV_SEQ_STATE	Conversion request and control states selected by SEL_FSM register field. SEL_FSM Signal 0 {conversion error, Request FSM state[3;0]} 1 VADC conversion control FSM state[4:0] 2 Sample average count[4:0] 3 Sample average count[9:5] Enumerations are Request FSM state[3:0]. VADC conversion control FSM state[4:0] encodings are: 0 IDLE 1 WAIT_VREG_OK_S 2 ENABLE_ADC_S 3 RESET_FILTER_S 4 WAIT_ADC_EOC_S 5 WAIT_SAMPLE_ACC_S 6 INCREMENT_READ_POINTER_S 7 WAIT_STORE_REQ_S 8 LATCH_FIFO_READ_DATA_S 9 COMPARE_OLD_NEW_REQ_S 10 WAIT_VREG_OK_D 11 WAIT1_IADC_FSM 12 ENABLE_ADC_D 13 WAIT2_IADC_FSM 14 RESET_FILTER_D 15 WAIT_ADC_EOC_D 16 WAIT3_IADC_FSM 17 WAIT_SAMPLE_ACC 18 INCREMENT_RD_POINTER_D 19 WAIT_STORE_WRITE_POINTERS 20 WAIT_COMPARE_RW_POINTERS 21 WAIT_STORE_REQ_D 22 LATCH_FIFO_READ_DATE_D 23 COMPARE_OLD_NEW_REQ_D 24 WAIT_PRECHARGE_S 25 DISABLE_ADC 0x0: IDLE_S 0x1: WAIT_TRIG_S 0x2: WAIT_HOLDOFF_S 0x3: CLEAR_ACC_S 0x4: STORE_REQ_S

VADC1_LC_USR_STATUS2 (cont.)

Bits	Name	Description
		0x5: WAIT_ADC_EOC_S 0x6: GEN_IRQ_S 0x7: IDLE_D 0x8: WAIT_TRIG_D 0x9: WAIT_HOLDOFF_D 0xA: CLEAR_ACC_D 0xB: STORE_WRITE_POINTERS 0xC: COMPARE_RW_POINTERS 0xD: STORE_REQ_D 0xE: WAIT_ADC_EOC_D 0xF: GEN_IRQ_D
1	FIFO_NOT_EMPTY_FLAG	Indicates conversion sequencer request written to FIFO when it was not empty. 0x0: FIFO_EMPTY_WHEN_REQ_MADE 0x1: FIFO_NOT_EMPTY_WHEN_REQ_MADE
0	CONV_SEQ_TIMEOUT_STS	Indicates conversion sequencer conversion was triggered by time out. 0x0: CONV_SEQ_TIMEOUT_FALSE 0x1: CONV_SEQ_TIMEOUT_TRUE

0x00003110 VADC1_LC_USR_INT_RT_STS

Type: R
Clock: pbus_wrclk
Reset State: 0x00
Reset Name: uvlo_perph_rb

Interrupt Real Time Status Bits

VADC1_LC_USR_INT_RT_STS

Bits	Name	Description
5	MIN_LOW_THR_INT_RT_STS	ADC minimum output lower than low threshold. Active high signal. 0x0: MIN_LOW_THR_INT_FALSE 0x1: MIN_LOW_THR_INT_TRUE
4	LOW_THR_INT_RT_STS	ADC output lower than low threshold. Active high signal. 0x0: LOW_THR_INT_FALSE 0x1: LOW_THR_INT_TRUE
3	HIGH_THR_INT_RT_STS	ADC output higher than high threshold. Active high signal. 0x0: HIGH_THR_INT_FALSE 0x1: HIGH_THR_INT_TRUE

VADC1_LC_USR_INT_RT_STS (cont.)

Bits	Name	Description
2	CONV_SEQ_TIMEOUT_INT_RT_STS	Indicates conversion sequencer conversion was triggered by SBI register field conversion request time out. 0x0: CONV_SEQ_TIMEOUT_FALSE 0x1: CONV_SEQ_TIMEOUT_TRUE
1	FIFO_NOT_EMPTY_INT_RT_STS	Indicates conversion sequencer request written to FIFO when it was not empty. 0x0: FIFO_NOT_EMPTY_INT_FALSE 0x1: FIFO_EMPTY_INT_TRUE
0	EOC_INT_RT_STS	Secure process end of conversion interrupt. Active high signal two tcxo_clk cycles wide. 0x0: CONV_COMPLETE_INT_FALSE 0x1: CONV_COMPLETE_INT_TRUE

0x00003111 VADC1_LC_USR_INT_SET_TYPE

Type: RW
Clock: pbus_wrclk
Reset State: 0x00
Reset Name: uvlo_perph_rb

0 = use level trigger interrupts, 1 = use edge trigger interrupts

VADC1_LC_USR_INT_SET_TYPE

Bits	Name	Description
5	MIN_LOW_THR_INT_SET_TYPE	Minimum Low threshold interrupt set type 0x0: MIN_LOW_THR_INT_LEVEL 0x1: MIN_LOW_THR_INT_EDGE
4	LOW_THR_INT_SET_TYPE	Low threshold interrupt set type 0x0: LOW_THR_INT_LEVEL 0x1: LOW_THR_INT_EDGE
3	HIGH_THR_INT_SET_TYPE	High threshold interrupt set type 0x0: HIGH_THR_INT_LEVEL 0x1: HIGH_THR_INT_EDGE
2	CONV_SEQ_TIMEOUT_INT_SET_TYPE	Conversion sequencer timeout interrupt set type 0x0: CONV_SEQ_TIMEOUT_LEVEL 0x1: CONV_SEQ_TIMEOUT_EDGE
1	FIFO_NOT_EMPTY_INT_SET_TYPE	FIFO not empty interrupt set type 0x0: FIFO_NOT_EMPTY_LEVEL 0x1: FIFO_NOT_EMPTY_EDGE

VADC1_LC_USR_INT_SET_TYPE (cont.)

Bits	Name	Description
0	EOC_SET_INT_TYPE	EOC interrupt set type 0x0: EOC_LEVEL 0x1: EOC_EDGE

0x00003112 VADC1_LC_USR_INT_POLARITY_HIGH

Type: RW
Clock: pbus_wrclk
Reset State: 0x00
Reset Name: uvlo_perph_rb

1= Interrupt will trigger on a level high (rising edge) event, 0 = level high triggering is disabled

VADC1_LC_USR_INT_POLARITY_HIGH

Bits	Name	Description
5	MIN_LOW_THR_INT_HIGH	Minimum Low threshold interrupt high polarity enabled 0x0: MIN_LOW_THR_INT_POL_HIGH_DISABLED 0x1: MIN_LOW_THR_INT_POL_HIGH_ENABLED
4	LOW_THR_INT_HIGH	Low threshold interrupt high polarity enabled 0x0: LOW_THR_INT_POL_HIGH_DISABLED 0x1: LOW_THR_INT_POL_HIGH_ENABLED
3	HIGH_THR_INT_HIGH	High threshold interrupt high polarity enabled 0x0: HIGH_THR_INT_POL_HIGH_DISABLED 0x1: HIGH_THR_INT_POL_HIGH_ENABLED
2	CONV_SEQ_TIMEOUT_INT_HIGH	Conversion sequencer interrupt high polarity enabled 0x0: CONV_SEQ_TIMEOUT_INT_POL_HIGH_DISABLED 0x1: CONV_SEQ_TIMEOUT_INT_POL_HIGH_ENABLED
1	FIFO_NOT_EMPTY_INT_HIGH	FIFO not empty interrupt high polarity enabled 0x0: FIFO_NOT_EMPTY_INT_POL_HIGH_DISABLED 0x1: FIFO_NOT_EMPTY_INT_POL_HIGH_ENABLED
0	EOC_INT_HIGH	EOC interrupt high polarity enabled 0x0: EOC_INT_POL_HIGH_DISABLED 0x1: EOC_INT_POL_HIGH_ENABLED

0x00003113 VADC1_LC_USR_INT_POLARITY_LOW

Type: RW
Clock: pbus_wrclk
Reset State: 0x00
Reset Name: uvlo_perph_rb

1' = Interrupt will trigger on a level low (falling edge) event, '0' = level low triggering is disabled

VADC1_LC_USR_INT_POLARITY_LOW

Bits	Name	Description
5	MIN_LOW_THR_INT_HIGH	Minimum Low threshold interrupt low polarity enabled 0x0: MIN_LOW_THR_INT_POL_LOW_DISABLED 0x1: MIN_LOW_THR_INT_POL_LOW_ENABLED
4	LOW_THR_INT_HIGH	Low threshold interrupt low polarity enabled 0x0: LOW_THR_INT_POL_LOW_DISABLED 0x1: LOW_THR_INT_POL_LOW_ENABLED
3	HIGH_THR_INT_HIGH	High threshold interrupt low polarity enabled 0x0: HIGH_THR_INT_POL_LOW_DISABLED 0x1: HIGH_THR_INT_POL_LOW_ENABLED
2	CONV_SEQ_TIME-OUT_INT_LOW	Conversion sequencer interrupt low polarity enabled 0x0: CONV_SEQ_TIMEOUT_INT_POL_LOW_DISABLED 0x1: CONV_SEQ_TIMEOUT_INT_POL_LOW_ENABLED
1	FIFO_NOT_EMPTY-_INT_LOW	FIFO not empty interrupt low polarity enabled 0x0: FIFO_NOT_EMPTY_INT_POL_LOW_DISABLED 0x1: FIFO_NOT_EMPTY_INT_POL_LOW_ENABLED
0	EOC_INT_LOW	EOC interrupt low polarity enabled 0x0: EOC_INT_POL_LOW_DISABLED 0x1: EOC_INT_POL_LOW_ENABLED

0x00003114 VADC1_LC_USR_INT_LATCHED_CLR

Type: W
Clock: pbus_wrclk
Reset State: 0x00
Reset Name: uvlo_perph_rb

Writing a '1' to a bit in this register will rearm the interrupt when an interrupt is pending. It clears the internal sticky and sent bits

VADC1_LC_USR_INT_LATCHED_CLR

Bits	Name	Description
5	MIN_LOW_THR_INT_LATCHED_CLR	Minimum Low threshold interrupt latched clear

VADC1_LC_USR_INT_LATCHED_CLR (cont.)

Bits	Name	Description
4	LOW_THR_INT_LATCHED_CLR	Low threshold interrupt latched clear
3	HIGH_THR_INT_LATCHED_CLR	High threshold interrupt latched clear
2	CONV_SEQ_TIMEOUT_INT_LATCHED_CLR	Conversion sequencer interrupt latched clear
1	FIFO_NOT_EMPTY_INT_LATCHED_CLR	FIFO not empty interrupt latched clear
0	EOC_INT_LATCHED_CLR	EOC interrupt latched clear

0x00003115 VADC1_LC_USR_INT_EN_SET

Type: RW
Clock: pbus_wrclk
Reset State: 0x00
Reset Name: uvlo_perph_rb

Writing '0' to a bit in this register has no effect. Writing a '1' to a bit in this register will enable the corresponding interrupt. Reading this register will readback enable status

PMIC_SET_MASK

VADC1_LC_USR_INT_EN_SET

Bits	Name	Description
5	MIN_LOW_THR_INT_EN_SET	Minimum Low threshold interrupt enable set 0x0: LOW_THR_INT_DISABLED 0x1: LOW_THR_INT_ENBLED
4	LOW_THR_INT_EN_SET	Low threshold interrupt enable set 0x0: LOW_THR_INT_DISABLED 0x1: LOW_THR_INT_ENBLED
3	HIGH_THR_INT_EN_SET	High threshold interrupt enable set 0x0: HIGH_THR_INT_DISABLED 0x1: HIGH_THR_INT_ENBLED
2	CONV_SEQ_TIMEOUT_INT_EN_SET	Conversion sequencer interrupt enable set 0x0: CONV_SEQ_TIMEOUT_INT_DISABLED 0x1: CONV_SEQ_TIMEOUT_INT_ENBLED
1	FIFO_NOT_EMPTY_INT_EN_SET	FIFO not empty interrupt enable set 0x0: FIFO_NOT_EMPTY_INT_DISABLED 0x1: FIFO_NOT_EMPTY_INT_ENBLED
0	EOC_INT_EN_SET	EOC interrupt enable set 0x0: EOC_INT_DISABLED 0x1: EOC_INT_ENBLED

0x00003116 VADC1_LC_USR_INT_EN_CLR

Type: RW
Clock: pbus_wrclk
Reset State: 0x00
Reset Name: uvlo_perph_rb

Writing a '0' to a bit in this register has no effect. Writing a '1' to a bit in this register will disable the corresponding interrupt. Reading this register will readback enable status

PMIC_CLR_MASK=INT_EN_SET

VADC1_LC_USR_INT_EN_CLR

Bits	Name	Description
5	MIN_LOW_THR_INT_EN_CLR	Minimum Low threshold interrupt enable clear 0x0: MIN_LOW_THR_INT_DISABLED 0x1: MIN_LOW_THR_INT_ENBLED
4	LOW_THR_INT_EN_CLR	Low threshold interrupt enable clear 0x0: LOW_THR_INT_DISABLED 0x1: LOW_THR_INT_ENBLED
3	HIGH_THR_INT_EN_CLR	High threshold interrupt enable clear 0x0: HIGH_THR_INT_DISABLED 0x1: HIGH_THR_INT_ENBLED
2	CONV_SEQ_TIMEOUT_INT_EN_-CLR	Conversion sequencer interrupt enable clear 0x0: CONV_SEQ_TIMEOUT_INT_DISABLED 0x1: CONV_SEQ_TIMEOUT_INT_ENBLED
1	FIFO_NOT_EMPTY_INT_EN_CLR	FIFO not empty interrupt enable clear 0x0: FIFO_NOT_EMPTY_INT_DISABLED 0x1: FIFO_NOT_EMPTY_INT_ENBLED
0	EOC_INT_EN_CLR	EOC interrupt enable clear 0x0: EOC_INT_DISABLED 0x1: EOC_INT_ENBLED

0x00003118 VADC1_LC_USR_INT_LATCHED_STS

Type: R
Clock: pbus_wrclk
Reset State: 0x00
Reset Name: uvlo_perph_rb

Debug: Latched (Sticky) Interrupt. '1' indicates that the interrupt has triggered. Once the latched bit is set it can only be cleared by writing the clear bit.

VADC1_LC_USR_INT_LATCHED_STS

Bits	Name	Description
5	MIN_LOW_THR_INT_LATCHED_STS	Minimum Low threshold interrupt latched 0x0: MIN_LOW_THR_INT_LATCHED_FALSE 0x1: MIN_LOW_THR_INT_LATCHED_TRUE
4	LOW_THR_INT_LATCHED_STS	Low threshold interrupt latched 0x0: LOW_THR_INT_LATCHED_FALSE 0x1: LOW_THR_INT_LATCHED_TRUE
3	HIGH_THR_INT_LATCHED_STS	High threshold interrupt latched 0x0: HIGH_THR_INT_LATCHED_FALSE 0x1: HIGH_THR_INT_LATCHED_TRUE
2	CONV_SEQ_TIME-OUT_INT_LATCHED_STS	Conversion sequencer interrupt latched 0x0: CONV_SEQ_TIMEOUT_INT_LATCHED_FALSE 0x1: CONV_SEQ_TIMEOUT_INT_LATCHED_TRUE
1	FIFO_NOT_EMPTY_INT_LATCHED_STS	FIFO not empty interrupt latched 0x0: FIFO_NOT_EMPTY_INT_LATCHED_FALSE 0x1: FIFO_NOT_EMPTY_INT_LATCHED_TRUE
0	EOC_INT_LATCHED_STS	EOC interrupt latched 0x0: EOC_INT_LATCHED_FALSE 0x1: EOC_INT_LATCHED_TRUE

0x00003119 VADC1_LC_USR_INT_PENDING_STS

Type: R
Clock: pbus_wrclk
Reset State: 0x00
Reset Name: uvlo_perph_rb

Debug: Pending is set if interrupt has been sent but not cleared.

VADC1_LC_USR_INT_PENDING_STS

Bits	Name	Description
5	MIN_LOW_THR_INT_PENDING_STS	Minimum Low threshold interrupt pending 0x0: MIN_LOW_THR_INT_PENDING_FALSE 0x1: MIN_LOW_THR_INT_PENDING_TRUE
4	LOW_THR_INT_PENDING_STS	Low threshold interrupt pending 0x0: LOW_THR_INT_PENDING_FALSE 0x1: LOW_THR_INT_PENDING_TRUE

VADC1_LC_USR_INT_PENDING_STS (cont.)

Bits	Name	Description
3	HIGH_THR_INT_PENDING_STS	High threshold interrupt pending 0x0: HIGH_THR_INT_PENDING_FALSE 0x1: HIGH_THR_INT_PENDING_TRUE
2	CONV_SEQ_TIMEOUT_INT_PEND-ING_STS	Conversion sequencer interrupt pending 0x0: CONV_SEQ_TIMEOUT_INT_PENDING_FALSE 0x1: CONV_SEQ_TIMEOUT_INT_PENDING_TRUE
1	FIFO_NOT_EMPTY_INT_PENDING_STS	FIFO not empty interrupt pending 0x0: FIFO_NOT_EMPTY_INT_PENDING_FALSE 0x1: FIFO_NOT_EMPTY_INT_PENDING_TRUE
0	EOC_INT_PENDING_STS	EOC interrupt pending 0x0: EOC_INT_PENDING_FALSE 0x1: EOC_INT_PENDING_TRUE

0x0000311A VADC1_LC_USR_INT_MID_SEL

Type: RW
Clock: pbus_wrclk
Reset State: 0x00
Reset Name: uvlo_perph_rb

Selects the MID that will receive the interrupt

VADC1_LC_USR_INT_MID_SEL

Bits	Name	Description
1:0	INT_MID_SEL	Selects the MID that will receive the interrupt

0x0000311B VADC1_LC_USR_INT_PRIORITY

Type: RW
Clock: pbus_wrclk
Reset State: 0x00
Reset Name: uvlo_perph_rb

Selects the SPMI interrupt priority

VADC1_LC_USR_INT_PRIORITY

Bits	Name	Description
0	INT_PRIORITY	Selects the SPMI interrupt priority 0x0: SR 0x1: A

0x00003140 VADC1_LC_USR_MODE_CTL

Type: RW
Clock: pbus_wrclk
Reset State: 0x03
Reset Name: uvlo_perph_rb

Settings Common to Input and Output

VADC1_LC_USR_MODE_CTL

Bits	Name	Description
4:3	OP_MODE	Selects basic mode of operation: 00=Normal Mode - Single measurement 01=Conversion Sequencer - Single measurement using conversion sequencer 10=Measurement Interval - Single or Continuous measurements at specified delay/interval 0x0: NORM_MODE 0x1: CONV_SEQ_MODE 0x2: MEAS_INT_MODE
2	VREF_XO_THM_FORCE	When cleared, VDD_REF is connected to XO thermistor in active mode, disconnected in sleep mode When set, force VDD_REF to be connected to the XO thermistor regardless the status of sleepb 0x0: VREF_XO_THM_FORCE_FALSE 0x1: VREF_XO_THM_FORCE_TRUE
1	AMUX_TRIM_EN	Enable AMUX trim 0x0: AMUX_TRIM_DISABLED 0x1: AMUX_TRIM_ENABLED
0	ADC_TRIM_EN	Enable ADC trim 0x0: ADC_TRIM_DISABLED 0x1: ADC_TRIM_ENABLED

0x00003146 VADC1_LC_USR_EN_CTL1

Type: RW
Clock: pbus_wrclk
Reset State: 0x00
Reset Name: uvlo_perph_rb

Enables ADC module.

VADC1_LC_USR_EN_CTL1

Bits	Name	Description
7	ADC_EN	Enables ADC module. 0x0: ADC_DISABLED 0x1: ADC_ENABLED

0x00003148 VADC1_LC_USR_ADC_CH_SEL_CTL

Type: RW
Clock: pbus_wrclk
Reset State: 0x06
Reset Name: uvlo_perph_rb

VADC1_LC_USR_ADC_CH_SEL_CTL

Bits	Name	Description
7:0	ADC_CH_SEL	ADC Channel selection. 0x0: USBIN_DIV20 0x1: Reserved 0x2: Reserved 0x3: Reserved 0x4: Reserved 0x5: VCOIN_DIV3 0x6: VBAT_SNS_DIV3 0x7: VSYS_DIV3 0x8: DIE_TEMP 0x9: VREF_0P625 0xA: VREF_1P25 0xB: CHG_TEMP 0xC: VREF_0P625_BUF 0xD: SPARE2 0xE: GND_REF 0xF: VDD_VADC 0x10: MPP1 0x11: MPP2 0x12: MPP3 0x13: MPP4 0x14: Reserved 0x15: Reserved 0x16: Reserved 0x17: Reserved 0x18: Reserved 0x19: Reserved 0x1A: Reserved 0x1B: Reserved 0x1C: Reserved 0x1D: Reserved 0x1E: Reserved 0x1F: Reserved 0x20: MPP1_DIV3 0x21: MPP2_DIV3 0x22: MPP3_DIV3 0x23: MPP4_DIV3 0x24: Reserved 0x25: Reserved 0x26: Reserved 0x27: Reserved 0x28: Reserved 0x29: Reserved

VADC1_LC_USR_ADC_CH_SEL_CTL (cont.)

Bits	Name	Description
		0x2A: Reserved 0x2B: Reserved 0x2C: Reserved 0x2D: Reserved 0x2E: Reserved 0x2F: Reserved 0x30: BAT_THERM 0x31: BAT_ID 0x32: XO_THERM 0x33: Reserved 0x34: Reserved 0x35: Reserved 0x36: PA_THERM 0xFF: All Channels OFF

0x00003150 VADC1_LC_USR_ADC_DIG_PARAM

Type: RW
Clock: pbus_wrclk
Reset State: 0x04
Reset Name: uvlo_perph_rb

ADC Digital Parameters

VADC1_LC_USR_ADC_DIG_PARAM

Bits	Name	Description
3:2	DEC_RATIO_SEL	Decimation ratio: 0x0: DECI_512 0x1: DECI_1K 0x2: DECI_2K 0x3: DECI_4K
1:0	CLK_SEL	Select ADC clock rate: 0x0: CLK_SEL_2P4MHZ 0x1: CLK_SEL_4P8MHZ 0x2: CLK_SEL_9P6MHZ 0x3: CLK_SEL_19P2MHZ

0x00003151 VADC1_LC_USR_HW_SETTLE_DELAY

Type: RW
Clock: pbus_wrclk
Reset State: 0x00
Reset Name: uvlo_perph_rb

Settle Delay

VADC1_LC_USR_HW_SETTLE_DELAY

Bits	Name	Description
3:0	HW_SETTLE_DELAY	Time between AMUX getting configured and the ADC starting conversion. Delay = 100us*(value) for value<11, and 2ms*(value-10) otherwise 0x0: HW_SETTLE_DELAY_0US 0x1: HW_SETTLE_DELAY_100US 0x2: HW_SETTLE_DELAY_200US 0x3: HW_SETTLE_DELAY_300US 0x4: HW_SETTLE_DELAY_400US 0x5: HW_SETTLE_DELAY_500US 0x6: HW_SETTLE_DELAY_600US 0x7: HW_SETTLE_DELAY_700US 0x8: HW_SETTLE_DELAY_800US 0x9: HW_SETTLE_DELAY_900US 0xA: HW_SETTLE_DELAY_1MS 0xB: HW_SETTLE_DELAY_2MS 0xC: HW_SETTLE_DELAY_4MS 0xD: HW_SETTLE_DELAY_6MS 0xE: HW_SETTLE_DELAY_8MS 0xF: HW_SETTLE_DELAY_10MS

0x00003152 VADC1_LC_USR_CONV_REQ

Type: W
Clock: pbus_wrclk
Reset State: 0x00
Reset Name: req_rb

Conversion Request

VADC1_LC_USR_CONV_REQ

Bits	Name	Description
7	REQ	Conversion request strobe. When bit is asserted the arbiter stores a descriptor in the conversion request queue. Bit is cleared when ADC conversion is completed. 0x0: CONV_REQ_FALSE 0x1: CONV_REQ_TRUE

0x00003154 VADC1_LC_USR_CONV_SEQ_CTL

Type: RW
Clock: pbus_wrclk
Reset State: 0x45
Reset Name: uvlo_perph_rb

Conversion Sequencer Control

VADC1_LC_USR_CONV_SEQ_CTL

Bits	Name	Description
7:4	CONV_SEQ_HOLDOFF	Select delay from conversion trigger signal (i.e. adc_conv_seq_trig) transition to ADC enable. Delay = 25us*(value+1). Actual delay will be longer if request is stored in a non empty FIFO and/or conversion needs to wait for LDO OK handshake. 0x0: SEQ_HOLD_25US 0x1: SEQ_HOLD_50US 0x2: SEQ_HOLD_75US 0x3: SEQ_HOLD_100US 0x4: SEQ_HOLD_125US 0x5: SEQ_HOLD_150US 0x6: SEQ_HOLD_175US 0x7: SEQ_HOLD_200US 0x8: SEQ_HOLD_225US 0x9: SEQ_HOLD_250US 0xA: SEQ_HOLD_275US 0xB: SEQ_HOLD_300US 0xC: SEQ_HOLD_325US 0xD: SEQ_HOLD_350US 0xE: SEQ_HOLD_375US 0xF: SEQ_HOLD_400US

VADC1_LC_USR_CONV_SEQ_CTL (cont.)

Bits	Name	Description
3:0	CONV_SEQ_TIMEOUT	Select delay (0 to 15ms) from conversion request to triggering conversion sequencer hold off timer. 0x0: SEQ_TIMEOUT_0MS 0x1: SEQ_TIMEOUT_1MS 0x2: SEQ_TIMEOUT_2MS 0x3: SEQ_TIMEOUT_3MS 0x4: SEQ_TIMEOUT_4MS 0x5: SEQ_TIMEOUT_5MS 0x6: SEQ_TIMEOUT_6MS 0x7: SEQ_TIMEOUT_7MS 0x8: SEQ_TIMEOUT_8MS 0x9: SEQ_TIMEOUT_9MS 0xA: SEQ_TIMEOUT_10MS 0xB: SEQ_TIMEOUT_11MS 0xC: SEQ_TIMEOUT_12MS 0xD: SEQ_TIMEOUT_13MS 0xE: SEQ_TIMEOUT_14MS 0xF: SEQ_TIMEOUT_15MS

0x00003155 VADC1_LC_USR_CONV_SEQ_TRIG_CTL

Type: RW
Clock: pbus_wrclk
Reset State: 0x00
Reset Name: uvlo_perph_rb

Conversion Sequencer Trigger Select

VADC1_LC_USR_CONV_SEQ_TRIG_CTL

Bits	Name	Description
7	CONV_SEQ_TRIG_COND	Select conversion trigger condition(s) that starts ADC conversion hold off timer. 0x0: FALLING_EDGE 0x1: RISING_EDGE
1:0	CONV_SEQ_TRIG_SEL	Select conversion sequencer trigger input signal. 0x0: ADC_TRIG0 0x1: ADC_TRIG1 0x2: ADC_TRIG2 0x3: ADC_TRIG3

0x00003157 VADC1_LC_USR_MEAS_INTERVAL_CTL

Type: RW
Clock: pbus_wrclk
Reset State: 0x00
Reset Name: uvlo_perph_rb

Interval Mode Control

VADC1_LC_USR_MEAS_INTERVAL_CTL

Bits	Name	Description
3:0	MEAS_INTERVAL_TIME	Select measurement interval time (i.e., If value=0, use 0ms, else use 2^(value+4)/32768). 0x0: MEAS_INTERVAL_0MS 0x1: MEAS_INTERVAL_1P0MS 0x2: MEAS_INTERVAL_2P0MS 0x3: MEAS_INTERVAL_3P9MS 0x4: MEAS_INTERVAL_7P8MS 0x5: MEAS_INTERVAL_15P6MS 0x6: MEAS_INTERVAL_31P3MS 0x7: MEAS_INTERVAL_62P5MS 0x8: MEAS_INTERVAL_125MS 0x9: MEAS_INTERVAL_250MS 0xA: MEAS_INTERVAL_500MS 0xB: MEAS_INTERVAL_1S 0xC: MEAS_INTERVAL_2S 0xD: MEAS_INTERVAL_4S 0xE: MEAS_INTERVAL_8S 0xF: MEAS_INTERVAL_16S

0x00003159 VADC1_LC_USR_MEAS_INTERVAL_OP_CTL

Type: RW
Clock: pbus_wrclk
Reset State: 0x00
Reset Name: uvlo_perph_rb

Interval mode select

VADC1_LC_USR_MEAS_INTERVAL_OP_CTL

Bits	Name	Description
7	MEAS_INTERVAL_OP	Interval mode select 0x0: INTERVAL_MODE_DISABLED 0x1: INTERVAL_MODE_ENABLED

0x0000315A VADC1_LC_USR_FAST_AVG_CTL

Type: RW
Clock: pbus_wrclk
Reset State: 0x00
Reset Name: uvlo_perph_rb

Fast Average Control

VADC1_LC_USR_FAST_AVG_CTL

Bits	Name	Description
3:0	FAST_AVG_SAMPLES	Select number of samples for use in fast average mode (i.e. 2^(value). 0x0: AVG_1_SAMPLE 0x1: AVG_2_SAMPLES 0x2: AVG_4_SAMPLES 0x3: AVG_8_SAMPLES 0x4: AVG_16_SAMPLES 0x5: AVG_32_SAMPLES 0x6: AVG_64_SAMPLES 0x7: AVG_128_SAMPLES 0x8: AVG_256_SAMPLES 0x9: AVG_512_SAMPLES

0x0000315B VADC1_LC_USR_FAST_AVG_EN

Type: RW
Clock: pbus_wrclk
Reset State: 0x00
Reset Name: uvlo_perph_rb

Fast Average Enable

VADC1_LC_USR_FAST_AVG_EN

Bits	Name	Description
7	FAST_AVG_EN	Select low latency for multiple conversions 0x0: FAST_AVG_DISABLED 0x1: FAST_AVG_ENABLED

0x0000315C VADC1_LC_USR_LOW_THR0

Type: RW
Clock: pbus_wrclk
Reset State: 0x00
Reset Name: uvlo_perph_rb

Low Threshold Byte 0

VADC1_LC_USR_LOW_THR0

Bits	Name	Description
7:0	LOW_THR_7_0	Low byte of low threshold detector

0x0000315D VADC1_LC_USR_LOW_THR1

Type: RW
Clock: pbus_wrclk
Reset State: 0x00
Reset Name: uvlo_perph_rb

Low Threshold Byte 1

VADC1_LC_USR_LOW_THR1

Bits	Name	Description
7:0	LOW_THR_15_8	High byte of low threshold detector

0x0000315E VADC1_LC_USR_HIGH_THR0

Type: RW
Clock: pbus_wrclk
Reset State: 0xFF
Reset Name: uvlo_perph_rb

High Threshold Byte 0

VADC1_LC_USR_HIGH_THR0

Bits	Name	Description
7:0	HIGH_THR_7_0	Low byte of high threshold detector

0x0000315F VADC1_LC_USR_HIGH_THR1

Type: RW
Clock: pbus_wrclk
Reset State: 0xFF
Reset Name: uvlo_perph_rb

High Threshold Byte 1

VADC1_LC_USR_HIGH_THR1

Bits	Name	Description
7:0	HIGH_THR_15_8	High byte of high threshold detector

0x00003160 VADC1_LC_USR_DATA0

Type: R
Clock: pbus_wrclk
Reset State: 0x00000000
Reset Name: uvlo_perph_rb

ADC Sample Byte 0

VADC1_LC_USR_DATA0

Bits	Name	Description
7:0	DATA_7_0	DEF: X Low byte of ADC output

0x00003161 VADC1_LC_USR_DATA1

Type: R
Clock: pbus_wrclk
Reset State: 0x00000000
Reset Name: uvlo_perph_rb

ADC Sample Byte 1

VADC1_LC_USR_DATA1

Bits	Name	Description
7:0	DATA_15_8	DEF: X High byte of ADC output

0x00003162 VADC1_LC_USR_MIN_LOW_THR0

Type: RW
Clock: pbus_wrclk
Reset State: 0x00
Reset Name: uvlo_perph_rb

Minimum Low Threshold Byte 0

VADC1_LC_USR_MIN_LOW_THR0

Bits	Name	Description
7:0	MIN_LOW_THR_7_0	Low byte of minimum low threshold detector

0x00003163 VADC1_LC_USR_MIN_LOW_THR1

Type: RW
Clock: pbus_wrclk
Reset State: 0x00
Reset Name: uvlo_perph_rb

Minimum Low Threshold Byte 1

VADC1_LC_USR_MIN_LOW_THR1

Bits	Name	Description
7:0	MIN_LOW_THR_15_8	High byte of minimum low threshold detector

0x00003166 VADC1_LC_USR_MIN_DATA0

Type: R
Clock: pbus_wrclk
Reset State: 0x00000000
Reset Name: uvlo_perph_rb

Minimum ADC Sample Byte 0

VADC1_LC_USR_MIN_DATA0

Bits	Name	Description
7:0	MIN_DATA_7_0	DEF: X Low byte of minimum ADC output

0x00003167 VADC1_LC_USR_MIN_DATA1

Type: R
Clock: pbus_wrclk
Reset State: 0x00000000
Reset Name: uvlo_perph_rb

Minimum ADC Sample Byte 1

VADC1_LC_USR_MIN_DATA1

Bits	Name	Description
7:0	MIN_DATA_15_8	DEF: X High byte of minimum ADC output

18 VADC3_LC_MDM_VADC_ADJ

0x00003200 - 0x00003203 RESERVED

0x00003204 VADC3_LC_MDM_PERPH_TYPE

Type: R
Clock: pbus_wrclk
Reset State: 0x08
Reset Name: N/A

Peripheral Type

PMIC_CONSTANT

VADC3_LC_MDM_PERPH_TYPE

Bits	Name	Description
7:0	TYPE	ADC

0x00003205 VADC3_LC_MDM_PERPH_SUBTYPE

Type: R
Clock: pbus_wrclk
Reset State: 0x0B
Reset Name: N/A

Peripheral SubType

VADC3_LC_MDM_PERPH_SUBTYPE

Bits	Name	Description
7:0	SUBTYPE	VADC1

0x00003208 VADC3_LC_MDM_STATUS1

Type: R
Clock: pbus_wrclk
Reset State: 0x01
Reset Name: N/A

Status Registers

VADC3_LC_MDM_STATUS1

Bits	Name	Description
4:3	OP_MODE	Selects basic mode of operation 0x0: NORM_MODE 0x1: CONV_SEQ_MODE 0x2: MEAS_INT_MODE
2	MEAS_INTERVAL_EN_STS	Interval Mode 0x0: INTERVAL_MODE_DISABLED 0x1: INTERVAL_MODE_ENABLED
1	REQ_STS	REQ_STS mirrors the REQ bit. When REQ is asserted the arbiter stores a descriptor in the conversion request queue. Bit is cleared when ADC conversion is completed. 0x0: REQ_NOT_IN_PROGRESS 0x1: REQ_IN_PROGRESS
0	EOC	End of conversion status flag. Bit is de-asserted when arbiter is servicing a conversion request and asserted when conversion is completed. After a conversion is requested, the EOC and REQ_STS bits can be polled to determine ADC conversion status as follows: REQ_STS EOC Arbiter state 1 1 Waiting for ADC to complete another process's conversion request. 1 0 ADC conversion occurring. 0 1 ADC conversion completed. 0 0 Invalid 0x0: CONV_NOT_COMPLETE 0x1: CONV_COMPLETE

0x00003209 VADC3_LC_MDM_STATUS2

Type: R
Clock: pbus_wrclk
Reset State: 0x00
Reset Name: N/A

Status Registers

VADC3_LC_MDM_STATUS2

Bits	Name	Description
7:3	CONV_SEQ_STATE	Conversion request and control states selected by SEL_FSM register field. SEL_FSM Signal 0 {conversion error, Request FSM state[3;0]} 1 VADC conversion control FSM state[4:0] 2 Sample average count[4:0] 3 Sample average count[9:5] Enumerations are Request FSM state[3:0]. VADC conversion control FSM state[4:0] encodings are: 0 IDLE 1 WAIT_VREG_OK_S 2 ENABLE_ADC_S 3 RESET_FILTER_S 4 WAIT_ADC_EOC_S 5 WAIT_SAMPLE_ACC_S 6 INCREMENT_READ_POINTER_S 7 WAIT_STORE_REQ_S 8 LATCH_FIFO_READ_DATA_S 9 COMPARE_OLD_NEW_REQ_S 10 WAIT_VREG_OK_D 11 WAIT1_IADC_FSM 12 ENABLE_ADC_D 13 WAIT2_IADC_FSM 14 RESET_FILTER_D 15 WAIT_ADC_EOC_D 16 WAIT3_IADC_FSM 17 WAIT_SAMPLE_ACC 18 INCREMENT_RD_POINTER_D 19 WAIT_STORE_WRITE_POINTERS 20 WAIT_COMPARE_RW_POINTERS 21 WAIT_STORE_REQ_D 22 LATCH_FIFO_READ_DATE_D 23 COMPARE_OLD_NEW_REQ_D 24 WAIT_PRECHARGE_S 25 DISABLE_ADC 0x0: IDLE_S 0x1: WAIT_TRIG_S 0x2: WAIT_HOLDOFF_S 0x3: CLEAR_ACC_S 0x4: STORE_REQ_S

VADC3_LC_MDM_STATUS2 (cont.)

Bits	Name	Description
		0x5: WAIT_ADC_EOC_S 0x6: GEN_IRQ_S 0x7: IDLE_D 0x8: WAIT_TRIG_D 0x9: WAIT_HOLDOFF_D 0xA: CLEAR_ACC_D 0xB: STORE_WRITE_POINTERS 0xC: COMPARE_RW_POINTERS 0xD: STORE_REQ_D 0xE: WAIT_ADC_EOC_D 0xF: GEN_IRQ_D
1	FIFO_NOT_EMPTY_FLAG	Indicates conversion sequencer request written to FIFO when it was not empty. 0x0: FIFO_EMPTY_WHEN_REQ_MADE 0x1: FIFO_NOT_EMPTY_WHEN_REQ_MADE
0	CONV_SEQ_TIMEOUT_STS	Indicates conversion sequencer conversion was triggered by time out. 0x0: CONV_SEQ_TIMEOUT_FALSE 0x1: CONV_SEQ_TIMEOUT_TRUE

0x00003210 VADC3_LC_MDM_INT_RT_STS

Type: R
Clock: pbus_wrclk
Reset State: 0x00
Reset Name: uvlo_perph_rb

Interrupt Real Time Status Bits

VADC3_LC_MDM_INT_RT_STS

Bits	Name	Description
5	MIN_LOW_THR_INT_RT_STS	ADC minimum output lower than low threshold. Active high signal. 0x0: MIN_LOW_THR_INT_FALSE 0x1: MIN_LOW_THR_INT_TRUE
4	LOW_THR_INT_RT_STS	ADC output lower than low threshold. Active high signal. 0x0: LOW_THR_INT_FALSE 0x1: LOW_THR_INT_TRUE
3	HIGH_THR_INT_RT_STS	ADC output higher than high threshold. Active high signal. 0x0: HIGH_THR_INT_FALSE 0x1: HIGH_THR_INT_TRUE

VADC3_LC_MDM_INT_RT_STS (cont.)

Bits	Name	Description
2	CONV_SEQ_TIME-OUT_INT_RT_STS	Indicates conversion sequencer conversion was triggered by SBI register field conversion request time out. 0x0: CONV_SEQ_TIMEOUT_FALSE 0x1: CONV_SEQ_TIMEOUT_TRUE
1	FIFO_NOT_EMPTY-_INT_RT_STS	Indicates conversion sequencer request written to FIFO when it was not empty. 0x0: FIFO_NOT_EMPTY_INT_FALSE 0x1: FIFO_EMPTY_INT_TRUE
0	EOC_INT_RT_STS	Secure process end of conversion interrupt. Active high signal two tcxo_clk cycles wide. 0x0: CONV_COMPLETE_INT_FALSE 0x1: CONV_COMPLETE_INT_TRUE

0x00003211 VADC3_LC_MDM_INT_SET_TYPE

Type: RW
Clock: pbus_wrclk
Reset State: 0x00
Reset Name: uvlo_perph_rb

0 = use level trigger interrupts, 1 = use edge trigger interrupts

VADC3_LC_MDM_INT_SET_TYPE

Bits	Name	Description
5	MIN_LOW_THR_INT_SET_-TYPE	Minimum Low threshold interrupt set type 0x0: MIN_LOW_THR_INT_LEVEL 0x1: MIN_LOW_THR_INT_EDGE
4	LOW_THR_INT_SET_TYPE	Low threshold interrupt set type 0x0: LOW_THR_INT_LEVEL 0x1: LOW_THR_INT_EDGE
3	HIGH_THR_INT_SET_TYPE	High threshold interrupt set type 0x0: HIGH_THR_INT_LEVEL 0x1: HIGH_THR_INT_EDGE
2	CONV_SEQ_TIME-OUT_INT_SET_TYPE	Conversion sequencer timeout interrupt set type 0x0: CONV_SEQ_TIMEOUT_LEVEL 0x1: CONV_SEQ_TIMEOUT_EDGE
1	FIFO_NOT_EMPTY-_INT_SET_TYPE	FIFO not empty interrupt set type 0x0: FIFO_NOT_EMPTY_LEVEL 0x1: FIFO_NOT_EMPTY_EDGE

VADC3_LC_MDM_INT_SET_TYPE (cont.)

Bits	Name	Description
0	EOC_SET_INT_TYPE	EOC interrupt set type 0x0: EOC_LEVEL 0x1: EOC_EDGE

0x00003212 VADC3_LC_MDM_INT_POLARITY_HIGH

Type: RW
Clock: pbus_wrclk
Reset State: 0x00
Reset Name: uvlo_perph_rb

1= Interrupt will trigger on a level high (rising edge) event, 0 = level high triggering is disabled

VADC3_LC_MDM_INT_POLARITY_HIGH

Bits	Name	Description
5	MIN_LOW_THR_INT_HIGH	Minimum Low threshold interrupt high polarity enabled 0x0: MIN_LOW_THR_INT_POL_HIGH_DISABLED 0x1: MIN_LOW_THR_INT_POL_HIGH_ENABLED
4	LOW_THR_INT_HIGH	Low threshold interrupt high polarity enabled 0x0: LOW_THR_INT_POL_HIGH_DISABLED 0x1: LOW_THR_INT_POL_HIGH_ENABLED
3	HIGH_THR_INT_HIGH	High threshold interrupt high polarity enabled 0x0: HIGH_THR_INT_POL_HIGH_DISABLED 0x1: HIGH_THR_INT_POL_HIGH_ENABLED
2	CONV_SEQ_TIME-OUT_INT_HIGH	Conversion sequencer interrupt high polarity enabled 0x0: CONV_SEQ_TIMEOUT_INT_POL_HIGH_DISABLED 0x1: CONV_SEQ_TIMEOUT_INT_POL_HIGH_ENABLED
1	FIFO_NOT_EMPTY-_INT_HIGH	FIFO not empty interrupt high polarity enabled 0x0: FIFO_NOT_EMPTY_INT_POL_HIGH_DISABLED 0x1: FIFO_NOT_EMPTY_INT_POL_HIGH_ENABLED
0	EOC_INT_HIGH	EOC interrupt high polarity enabled 0x0: EOC_INT_POL_HIGH_DISABLED 0x1: EOC_INT_POL_HIGH_ENABLED

0x00003213 VADC3_LC_MDM_INT_POLARITY_LOW

Type: RW
Clock: pbus_wrclk
Reset State: 0x00
Reset Name: uvlo_perph_rb

1' = Interrupt will trigger on a level low (falling edge) event, '0' = level low triggering is disabled

VADC3_LC_MDM_INT_POLARITY_LOW

Bits	Name	Description
5	MIN_LOW_THR_INT_HIGH	Minimum Low threshold interrupt low polarity enabled 0x0: MIN_LOW_THR_INT_POL_LOW_DISABLED 0x1: MIN_LOW_THR_INT_POL_LOW_ENABLED
4	LOW_THR_INT_HIGH	Low threshold interrupt low polarity enabled 0x0: LOW_THR_INT_POL_LOW_DISABLED 0x1: LOW_THR_INT_POL_LOW_ENABLED
3	HIGH_THR_INT_HIGH	High threshold interrupt low polarity enabled 0x0: HIGH_THR_INT_POL_LOW_DISABLED 0x1: HIGH_THR_INT_POL_LOW_ENABLED
2	CONV_SEQ_TIME-OUT_INT_LOW	Conversion sequencer interrupt low polarity enabled 0x0: CONV_SEQ_TIMEOUT_INT_POL_LOW_DISABLED 0x1: CONV_SEQ_TIMEOUT_INT_POL_LOW_ENABLED
1	FIFO_NOT_EMPTY-_INT_LOW	FIFO not empty interrupt low polarity enabled 0x0: FIFO_NOT_EMPTY_INT_POL_LOW_DISABLED 0x1: FIFO_NOT_EMPTY_INT_POL_LOW_ENABLED
0	EOC_INT_LOW	EOC interrupt low polarity enabled 0x0: EOC_INT_POL_LOW_DISABLED 0x1: EOC_INT_POL_LOW_ENABLED

0x00003214 VADC3_LC_MDM_INT_LATCHED_CLR

Type: W
Clock: pbus_wrclk
Reset State: 0x00
Reset Name: uvlo_perph_rb

Writing a '1' to a bit in this register will rearm the interrupt when an interrupt is pending. It clears the internal sticky and sent bits

VADC3_LC_MDM_INT_LATCHED_CLR

Bits	Name	Description
5	MIN_LOW_THR_INT_LATCHED_CLR	Minimum Low threshold interrupt latched clear
4	LOW_THR_INT_LATCHED_CLR	Low threshold interrupt latched clear
3	HIGH_THR_INT_LATCHED_CLR	High threshold interrupt latched clear
2	CONV_SEQ_TIMEOUT_INT_LATCHED_-CLR	Conversion sequencer interrupt latched clear
1	FIFO_NOT_EMPTY_INT_LATCHED_CLR	FIFO not empty interrupt latched clear
0	EOC_INT_LATCHED_CLR	EOC interrupt latched clear

0x00003215 VADC3_LC_MDM_INT_EN_SET

Type: RW
Clock: pbus_wrclk
Reset State: 0x00
Reset Name: uvlo_perph_rb

Writing '0' to a bit in this register has no effect. Writing a '1' to a bit in this register will enable the corresponding interrupt. Reading this register will readback enable status

PMIC_SET_MASK

VADC3_LC_MDM_INT_EN_SET

Bits	Name	Description
5	MIN_LOW_THR_INT_EN_SET	Minimum Low threshold interrupt enable set 0x0: MIN_LOW_THR_INT_DISABLED 0x1: MIN_LOW_THR_INT_ENBLED
4	LOW_THR_INT_EN_SET	Low threshold interrupt enable set 0x0: LOW_THR_INT_DISABLED 0x1: LOW_THR_INT_ENBLED
3	HIGH_THR_INT_EN_SET	High threshold interrupt enable set 0x0: HIGH_THR_INT_DISABLED 0x1: HIGH_THR_INT_ENBLED
2	CONV_SEQ_TIME-OUT_INT_EN_SET	Conversion sequencer interrupt enable set 0x0: CONV_SEQ_TIMEOUT_INT_DISABLED 0x1: CONV_SEQ_TIMEOUT_INT_ENBLED
1	FIFO_NOT_EMPTY-_INT_EN_SET	FIFO not empty interrupt enable set 0x0: FIFO_NOT_EMPTY_INT_DISABLED 0x1: FIFO_NOT_EMPTY_INT_ENBLED
0	EOC_INT_EN_SET	EOC interrupt enable set 0x0: EOC_INT_DISABLED 0x1: EOC_INT_ENBLED

0x00003216 VADC3_LC_MDM_INT_EN_CLR

Type: RW
Clock: pbus_wrclk
Reset State: 0x00
Reset Name: uvlo_perph_rb

Writing a '0' to a bit in this register has no effect. Writing a '1' to a bit in this register will disable the corresponding interrupt. Reading this register will readback enable status

PMIC_CLR_MASK=INT_EN_SET

VADC3_LC_MDM_INT_EN_CLR

Bits	Name	Description
5	MIN_LOW_THR_INT_EN_-CLR	Minimum Low threshold interrupt enable clear 0x0: MIN_LOW_THR_INT_DISABLED 0x1: MIN_LOW_THR_INT_ENBLED
4	LOW_THR_INT_EN_CLR	Low threshold interrupt enable clear 0x0: LOW_THR_INT_DISABLED 0x1: LOW_THR_INT_ENBLED
3	HIGH_THR_INT_EN_CLR	High threshold interrupt enable clear 0x0: HIGH_THR_INT_DISABLED 0x1: HIGH_THR_INT_ENBLED
2	CONV_SEQ_TIME-OUT_INT_EN_CLR	Conversion sequencer interrupt enable clear 0x0: CONV_SEQ_TIMEOUT_INT_DISABLED 0x1: CONV_SEQ_TIMEOUT_INT_ENBLED
1	FIFO_NOT_EMPTY-_INT_EN_CLR	FIFO not empty interrupt enable clear 0x0: FIFO_NOT_EMPTY_INT_DISABLED 0x1: FIFO_NOT_EMPTY_INT_ENBLED
0	EOC_INT_EN_CLR	EOC interrupt enable clear 0x0: EOC_INT_DISABLED 0x1: EOC_INT_ENBLED

0x00003218 VADC3_LC_MDM_INT_LATCHED_STS

Type: R
Clock: pbus_wrclk
Reset State: 0x00
Reset Name: uvlo_perph_rb

Debug: Latched (Sticky) Interrupt. '1' indicates that the interrupt has triggered. Once the latched bit is set it can only be cleared by writing the clear bit.

VADC3_LC_MDM_INT_LATCHED_STS

Bits	Name	Description
5	MIN_LOW_THR_INT_LATC HED_STS	Minimum Low threshold interrupt latched 0x0: MIN_LOW_THR_INT_LATCHED_FALSE 0x1: MIN_LOW_THR_INT_LATCHED_TRUE
4	LOW_THR_INT_LATCHED_ STS	Low threshold interrupt latched 0x0: LOW_THR_INT_LATCHED_FALSE 0x1: LOW_THR_INT_LATCHED_TRUE
3	HIGH_THR_INT_LATCHED_ STS	High threshold interrupt latched 0x0: HIGH_THR_INT_LATCHED_FALSE 0x1: HIGH_THR_INT_LATCHED_TRUE

VADC3_LC_MDM_INT_LATCHED_STS (cont.)

Bits	Name	Description
2	CONV_SEQ_TIME-OUT_INT_LATCHED_STS	Conversion sequencer interrupt latched 0x0: CONV_SEQ_TIMEOUT_INT_LATCHED_FALSE 0x1: CONV_SEQ_TIMEOUT_INT_LATCHED_TRUE
1	FIFO_NOT_EMPTY-_INT_LATCHED_STS	FIFO not empty interrupt latched 0x0: FIFO_NOT_EMPTY_INT_LATCHED_FALSE 0x1: FIFO_NOT_EMPTY_INT_LATCHED_TRUE
0	EOC_INT_LATCHED_STS	EOC interrupt latched 0x0: EOC_INT_LATCHED_FALSE 0x1: EOC_INT_LATCHED_TRUE

0x00003219 VADC3_LC_MDM_INT_PENDING_STS

Type: R
Clock: pbus_wrclk
Reset State: 0x00
Reset Name: uvlo_perph_rb

Debug: Pending is set if interrupt has been sent but not cleared.

VADC3_LC_MDM_INT_PENDING_STS

Bits	Name	Description
5	MIN_LOW_THR_INT_PEND-ING_STS	Minimum Low threshold interrupt pending 0x0: MIN_LOW_THR_INT_PENDING_FALSE 0x1: MIN_LOW_THR_INT_PENDING_TRUE
4	LOW_THR_INT_PENDING_STS	Low threshold interrupt pending 0x0: LOW_THR_INT_PENDING_FALSE 0x1: LOW_THR_INT_PENDING_TRUE
3	HIGH_THR_INT_PENDING_STS	High threshold interrupt pending 0x0: HIGH_THR_INT_PENDING_FALSE 0x1: HIGH_THR_INT_PENDING_TRUE
2	CONV_SEQ_TIMEOUT_INT_PEND-ING_STS	Conversion sequencer interrupt pending 0x0: CONV_SEQ_TIMEOUT_INT_PENDING_FALSE 0x1: CONV_SEQ_TIMEOUT_INT_PENDING_TRUE
1	FIFO_NOT_EMPTY_INT_PEND-ING_STS	FIFO not empty interrupt pending 0x0: FIFO_NOT_EMPTY_INT_PENDING_FALSE 0x1: FIFO_NOT_EMPTY_INT_PENDING_TRUE
0	EOC_INT_PENDING_STS	EOC interrupt pending 0x0: EOC_INT_PENDING_FALSE 0x1: EOC_INT_PENDING_TRUE

0x0000321A VADC3_LC_MDM_INT_MID_SEL

Type: RW
Clock: pbus_wrclk
Reset State: 0x00
Reset Name: uvlo_perph_rb

Selects the MID that will receive the interrupt

VADC3_LC_MDM_INT_MID_SEL

Bits	Name	Description
1:0	INT_MID_SEL	Selects the MID that will receive the interrupt

0x0000321B VADC3_LC_MDM_INT_PRIORITY

Type: RW
Clock: pbus_wrclk
Reset State: 0x00
Reset Name: uvlo_perph_rb

Selects the SPMI interrupt priority

VADC3_LC_MDM_INT_PRIORITY

Bits	Name	Description
0	INT_PRIORITY	Selects the SPMI interrupt priority 0x0: SR 0x1: A

0x00003240 VADC3_LC_MDM_MODE_CTL

Type: RW
Clock: pbus_wrclk
Reset State: 0x03
Reset Name: uvlo_perph_rb

Settings Common to Input and Output

VADC3_LC_MDM_MODE_CTL

Bits	Name	Description
4:3	OP_MODE	Selects basic mode of operation: 00=Normal Mode - Single measurement 01=Conversion Sequencer - Single measurement using conversion sequencer 10=Measurement Interval - Single or Continuous measurements at specified delay/interval 0x0: NORM_MODE 0x0: NORM_MODE 0x1: CONV_SEQ_MODE 0x2: MEAS_INT_MODE
2	VREF_XO_THM_FORCE	When cleared, VDD_REF is connected to XO thermistor in active mode, disconnected in sleep mode When set, force VDD_REF to be connected to the XO thermistor regardless the status of sleepb 0x0: VREF_XO_THM_FORCE_FALSE 0x1: VREF_XO_THM_FORCE_TRUE
1	AMUX_TRIM_EN	Enable AMUX trim 0x0: AMUX_TRIM_DISABLED 0x1: AMUX_TRIM_ENABLED
0	ADC_TRIM_EN	Enable ADC trim 0x0: ADC_TRIM_DISABLED 0x1: ADC_TRIM_ENABLED

0x00003246 VADC3_LC_MDM_EN_CTL1

Type: RW
Clock: pbus_wrclk
Reset State: 0x00
Reset Name: uvlo_perph_rb

Enables ADC module.

VADC3_LC_MDM_EN_CTL1

Bits	Name	Description
7	ADC_EN	Enables ADC module. 0x0: ADC_DISABLED 0x1: ADC_ENABLED

0x00003248 VADC3_LC_MDM_ADC_CH_SEL_CTL

Type: RW
Clock: pbus_wrclk
Reset State: 0x06
Reset Name: uvlo_perph_rb

ADC Channel selection.

VADC3_LC_MDM_ADC_CH_SEL_CTL

Bits	Name	Description
7:0	ADC_CH_SEL	ADC Channel selection.

0x00003250 VADC3_LC_MDM_ADC_DIG_PARAM

Type: RW
Clock: pbus_wrclk
Reset State: 0x04
Reset Name: uvlo_perph_rb

ADC Digital Parameters

VADC3_LC_MDM_ADC_DIG_PARAM

Bits	Name	Description
3:2	DEC_RATIO_SEL	Decimation ratio: 0x0: DECI_512 0x1: DECI_1K 0x2: DECI_2K 0x3: DECI_4K
1:0	CLK_SEL	Select ADC clock rate: 0x0: CLK_SEL_2P4MHZ 0x1: CLK_SEL_4P8MHZ 0x2: CLK_SEL_9P6MHZ 0x3: CLK_SEL_19P2MHZ

0x00003251 VADC3_LC_MDM_HW_SETTLE_DELAY

Type: RW
Clock: pbus_wrclk
Reset State: 0x00
Reset Name: uvlo_perph_rb

Settle Delay

VADC3_LC_MDM_HW_SETTLE_DELAY

Bits	Name	Description
3:0	HW_SETTLE_DELAY	Time between AMUX getting configured and the ADC starting conversion. Delay = 100us*(value) for value<11, and 2ms*(value-10) otherwise 0x0: HW_SETTLE_DELAY_0US 0x1: HW_SETTLE_DELAY_100US 0x2: HW_SETTLE_DELAY_200US 0x3: HW_SETTLE_DELAY_300US 0x4: HW_SETTLE_DELAY_400US 0x5: HW_SETTLE_DELAY_500US 0x6: HW_SETTLE_DELAY_600US 0x7: HW_SETTLE_DELAY_700US 0x8: HW_SETTLE_DELAY_800US 0x9: HW_SETTLE_DELAY_900US 0xA: HW_SETTLE_DELAY_1MS 0xB: HW_SETTLE_DELAY_2MS 0xC: HW_SETTLE_DELAY_4MS 0xD: HW_SETTLE_DELAY_6MS 0xE: HW_SETTLE_DELAY_8MS 0xF: HW_SETTLE_DELAY_10MS

0x00003252 VADC3_LC_MDM_CONV_REQ

Type: W
Clock: pbus_wrclk
Reset State: 0x00
Reset Name: req_rb

Conversion Request

VADC3_LC_MDM_CONV_REQ

Bits	Name	Description
7	REQ	Conversion request strobe. When bit is asserted the arbiter stores a descriptor in the conversion request queue. Bit is cleared when ADC conversion is completed. 0x0: CONV_REQ_FALSE 0x1: CONV_REQ_TRUE

0x00003254 VADC3_LC_MDM_CONV_SEQ_CTL

Type: RW
Clock: pbus_wrclk
Reset State: 0x45
Reset Name: uvlo_perph_rb

Conversion Sequencer Control

VADC3_LC_MDM_CONV_SEQ_CTL

Bits	Name	Description
7:4	CONV_SEQ_HOLDOFF	Select delay from conversion trigger signal (i.e. adc_conv_seq_trig) transition to ADC enable. Delay = 25us*(value+1). Actual delay will be longer if request is stored in a non empty FIFO and/or conversion needs to wait for LDO OK handshake. 0x0: SEQ_HOLD_25US 0x1: SEQ_HOLD_50US 0x2: SEQ_HOLD_75US 0x3: SEQ_HOLD_100US 0x4: SEQ_HOLD_125US 0x5: SEQ_HOLD_150US 0x6: SEQ_HOLD_175US 0x7: SEQ_HOLD_200US 0x8: SEQ_HOLD_225US 0x9: SEQ_HOLD_250US 0xA: SEQ_HOLD_275US 0xB: SEQ_HOLD_300US 0xC: SEQ_HOLD_325US 0xD: SEQ_HOLD_350US 0xE: SEQ_HOLD_375US 0xF: SEQ_HOLD_400US
3:0	CONV_SEQ_TIMEOUT	Select delay (0 to 15ms) from conversion request to triggering conversion sequencer hold off timer. 0x0: SEQ_TIMEOUT_0MS 0x1: SEQ_TIMEOUT_1MS 0x2: SEQ_TIMEOUT_2MS 0x3: SEQ_TIMEOUT_3MS 0x4: SEQ_TIMEOUT_4MS 0x5: SEQ_TIMEOUT_5MS 0x6: SEQ_TIMEOUT_6MS 0x7: SEQ_TIMEOUT_7MS 0x8: SEQ_TIMEOUT_8MS 0x9: SEQ_TIMEOUT_9MS 0xA: SEQ_TIMEOUT_10MS 0xB: SEQ_TIMEOUT_11MS 0xC: SEQ_TIMEOUT_12MS 0xD: SEQ_TIMEOUT_13MS 0xE: SEQ_TIMEOUT_14MS 0xF: SEQ_TIMEOUT_15MS

0x00003255 VADC3_LC_MDM_CONV_SEQ_TRIG_CTL

Type: RW
Clock: pbus_wrclk
Reset State: 0x00
Reset Name: uvlo_perph_rb

Conversion Sequencer Trigger Select

VADC3_LC_MDM_CONV_SEQ_TRIG_CTL

Bits	Name	Description
7	CONV_SEQ_TRIG_COND	Select conversion trigger condition(s) that starts ADC conversion hold off timer. 0x0 - Falling edge 0x1 - Rising edge
1:0	CONV_SEQ_TRIG_SEL	Select conversion sequencer trigger input signal. 0x0: ADC_TRIG0 0x1: ADC_TRIG1 0x2: ADC_TRIG2 0x3: ADC_TRIG3

0x00003257 VADC3_LC_MDM_MEAS_INTERVAL_CTL

Type: RW
Clock: pbus_wrclk
Reset State: 0x00
Reset Name: uvlo_perph_rb

Interval Mode Control

VADC3_LC_MDM_MEAS_INTERVAL_CTL

Bits	Name	Description
3:0	MEAS_INTERVAL_TIME	Select measurement interval time (i.e., If value=0, use 0ms, else use 2^(value+4)/32768). 0x0: MEAS_INTERVAL_0MS 0x1: MEAS_INTERVAL_1P0MS 0x2: MEAS_INTERVAL_2P0MS 0x3: MEAS_INTERVAL_3P9MS 0x4: MEAS_INTERVAL_7P8MS 0x5: MEAS_INTERVAL_15P6MS 0x6: MEAS_INTERVAL_31P3MS 0x7: MEAS_INTERVAL_62P5MS 0x8: MEAS_INTERVAL_125MS 0x9: MEAS_INTERVAL_250MS 0xA: MEAS_INTERVAL_500MS 0xB: MEAS_INTERVAL_1S 0xC: MEAS_INTERVAL_2S 0xD: MEAS_INTERVAL_4S 0xE: MEAS_INTERVAL_8S 0xF: MEAS_INTERVAL_16S

0x00003259 VADC3_LC_MDM_MEAS_INTERVAL_OP_CTL

Type: RW
Clock: pbus_wrclk
Reset State: 0x00
Reset Name: uvlo_perph_rb

Interval mode select

VADC3_LC_MDM_MEAS_INTERVAL_OP_CTL

Bits	Name	Description
7	MEAS_INTERVAL_OP	Interval mode select 0x0: INTERVAL_MODE_DISABLED 0x1: INTERVAL_MODE_ENABLED

0x0000325A VADC3_LC_MDM_FAST_AVG_CTL

Type: RW
Clock: pbus_wrclk
Reset State: 0x00
Reset Name: uvlo_perph_rb

Fast Average Control

VADC3_LC_MDM_FAST_AVG_CTL

Bits	Name	Description
3:0	FAST_AVG_SAMPLES	Select number of samples for use in fast average mode (i.e. 2^(value). 0x0: AVG_1_SAMPLE 0x1: AVG_2_SAMPLES 0x2: AVG_4_SAMPLES 0x3: AVG_8_SAMPLES 0x4: AVG_16_SAMPLES 0x5: AVG_32_SAMPLES 0x6: AVG_64_SAMPLES 0x7: AVG_128_SAMPLES 0x8: AVG_256_SAMPLES 0x9: AVG_512_SAMPLES

0x0000325B VADC3_LC_MDM_FAST_AVG_EN

Type: RW
Clock: pbus_wrclk
Reset State: 0x00
Reset Name: uvlo_perph_rb

Fast Average Enable

VADC3_LC_MDM_FAST_AVG_EN

Bits	Name	Description
7	FAST_AVG_EN	Select low latency for multiple conversions 0x0: FAST_AVG_DISABLED 0x1: FAST_AVG_ENABLED

0x0000325C VADC3_LC_MDM_LOW_THR0

Type: RW
Clock: pbus_wrclk
Reset State: 0x00
Reset Name: uvlo_perph_rb

Low Threshold Byte 0

VADC3_LC_MDM_LOW_THR0

Bits	Name	Description
7:0	LOW_THR_7_0	Low byte of low threshold detector

0x0000325D VADC3_LC_MDM_LOW_THR1

Type: RW
Clock: pbus_wrclk
Reset State: 0x00
Reset Name: uvlo_perph_rb

Low Threshold Byte 1

VADC3_LC_MDM_LOW_THR1

Bits	Name	Description
7:0	LOW_THR_15_8	High byte of low threshold detector

0x0000325E VADC3_LC_MDM_HIGH_THR0

Type: RW
Clock: pbus_wrclk
Reset State: 0xFF
Reset Name: uvlo_perph_rb

High Threshold Byte 0

VADC3_LC_MDM_HIGH_THR0

Bits	Name	Description
7:0	HIGH_THR_7_0	Low byte of high threshold detector

0x0000325F VADC3_LC_MDM_HIGH_THR1

Type: RW
Clock: pbus_wrclk
Reset State: 0xFF
Reset Name: uvlo_perph_rb

High Threshold Byte 1

VADC3_LC_MDM_HIGH_THR1

Bits	Name	Description
7:0	HIGH_THR_15_8	High byte of high threshold detector

0x00003260 VADC3_LC_MDM_DATA0

Type: R
Clock: pbus_wrclk
Reset State: 0x00000000
Reset Name: uvlo_perph_rb

ADC Sample Byte 0

VADC3_LC_MDM_DATA0

Bits	Name	Description
7:0	DATA_7_0	DEF: X Low byte of ADC output

0x00003261 VADC3_LC_MDM_DATA1

Type: R
Clock: pbus_wrclk
Reset State: 0x00000000
Reset Name: uvlo_perph_rb

ADC Sample Byte 1

VADC3_LC_MDM_DATA1

Bits	Name	Description
7:0	DATA_15_8	DEF: X High byte of ADC output

0x00003262 VADC3_LC_MDM_MIN_LOW_THR0

Type: RW
Clock: pbus_wrclk
Reset State: 0x00
Reset Name: uvlo_perph_rb

Minimum Low Threshold Byte 0

VADC3_LC_MDM_MIN_LOW_THR0

Bits	Name	Description
7:0	MIN_LOW_THR_7_0	Low byte of minimum low threshold detector

0x00003263 VADC3_LC_MDM_MIN_LOW_THR1

Type: RW
Clock: pbus_wrclk
Reset State: 0x00
Reset Name: uvlo_perph_rb

Minimum Low Threshold Byte 1

VADC3_LC_MDM_MIN_LOW_THR1

Bits	Name	Description
7:0	MIN_LOW_THR_15_8	High byte of minimum low threshold detector

0x00003266 VADC3_LC_MDM_MIN_DATA0

Type: R
Clock: pbus_wrclk
Reset State: 0x00000000
Reset Name: uvlo_perph_rb

Minimum ADC Sample Byte 0

VADC3_LC_MDM_MIN_DATA0

Bits	Name	Description
7:0	MIN_DATA_7_0	DEF: X Low byte of minimum ADC output

0x00003267 VADC3_LC_MDM_MIN_DATA1

Type: R
Clock: pbus_wrclk
Reset State: 0x00000000
Reset Name: uvlo_perph_rb

Minimum ADC Sample Byte 1

VADC3_LC_MDM_MIN_DATA1

Bits	Name	Description
7:0	MIN_DATA_15_8	DEF: X High byte of minimum ADC output

19 VADC3_LC_VBMS_VADC_ADJ

0x00003300 - 0x00003303 RESERVED

0x00003304 VADC3_LC_VBMS_PERPH_TYPE

Type: R
Clock: pbus_wrclk
Reset State: 0x08
Reset Name: N/A

Peripheral Type

PMIC_CONSTANT

VADC3_LC_VBMS_PERPH_TYPE

Bits	Name	Description
7:0	TYPE	ADC

0x00003305 VADC3_LC_VBMS_PERPH_SUBTYPE

Type: R
Clock: pbus_wrclk
Reset State: 0x0B
Reset Name: N/A

Peripheral SubType

VADC3_LC_VBMS_PERPH_SUBTYPE

Bits	Name	Description
7:0	SUBTYPE	VADC1

0x00003308 VADC3_LC_VBMS_STATUS1

Type: R
Clock: pbus_wrclk
Reset State: 0x01
Reset Name: N/A

Status Registers

VADC3_LC_VBMS_STATUS1

Bits	Name	Description
4:3	OP_MODE	Selects basic mode of operation 0x0: NORM_MODE 0x1: CONV_SEQ_MODE 0x2: MEAS_INT_MODE
2	MEAS_INTERVAL_EN_STS	Interval Mode 0x0: INTERVAL_MODE_DISABLED 0x1: INTERVAL_MODE_ENABLED
1	REQ_STS	REQ_STS mirrors the REQ bit. When REQ is asserted the arbiter stores a descriptor in the conversion request queue. Bit is cleared when ADC conversion is completed. 0x0: REQ_NOT_IN_PROGRESS 0x1: REQ_IN_PROGRESS
0	EOC	End of conversion status flag. Bit is de-asserted when arbiter is servicing a conversion request and asserted when conversion is completed. After a conversion is requested, the EOC and REQ_STS bits can be polled to determine ADC conversion status as follows: REQ_STS EOC Arbiter state 1 1 Waiting for ADC to complete another process's conversion request. 1 0 ADC conversion occurring. 0 1 ADC conversion completed. 0 0 Invalid 0x0: CONV_NOT_COMPLETE 0x1: CONV_COMPLETE

0x00003309 VADC3_LC_VBMS_STATUS2

Type: R
Clock: pbus_wrclk
Reset State: 0x00
Reset Name: N/A

Status Registers

VADC3_LC_VBMS_STATUS2

Bits	Name	Description
7:3	CONV_SEQ_STATE	Conversion request and control states selected by SEL_FSM register field. SEL_FSM Signal 0 {conversion error, Request FSM state[3;0]} 1 VADC conversion control FSM state[4:0] 2 Sample average count[4:0] 3 Sample average count[9:5] Enumerations are Request FSM state[3:0]. VADC conversion control FSM state[4:0] encodings are: 0 IDLE 1 WAIT_VREG_OK_S 2 ENABLE_ADC_S 3 RESET_FILTER_S 4 WAIT_ADC_EOC_S 5 WAIT_SAMPLE_ACC_S 6 INCREMENT_READ_POINTER_S 7 WAIT_STORE_REQ_S 8 LATCH_FIFO_READ_DATA_S 9 COMPARE_OLD_NEW_REQ_S 10 WAIT_VREG_OK_D 11 WAIT1_IADC_FSM 12 ENABLE_ADC_D 13 WAIT2_IADC_FSM 14 RESET_FILTER_D 15 WAIT_ADC_EOC_D 16 WAIT3_IADC_FSM 17 WAIT_SAMPLE_ACC 18 INCREMENT_RD_POINTER_D 19 WAIT_STORE_WRITE_POINTERS 20 WAIT_COMPARE_RW_POINTERS 21 WAIT_STORE_REQ_D 22 LATCH_FIFO_READ_DATE_D 23 COMPARE_OLD_NEW_REQ_D 24 WAIT_PRECHARGE_S 25 DISABLE_ADC 0x0: IDLE_S 0x1: WAIT_TRIG_S 0x2: WAIT_HOLDOFF_S 0x3: CLEAR_ACC_S 0x4: STORE_REQ_S

VADC3_LC_VBMS_STATUS2 (cont.)

Bits	Name	Description
		0x5: WAIT_ADC_EOC_S 0x6: GEN_IRQ_S 0x7: IDLE_D 0x8: WAIT_TRIG_D 0x9: WAIT_HOLDOFF_D 0xA: CLEAR_ACC_D 0xB: STORE_WRITE_POINTERS 0xC: COMPARE_RW_POINTERS 0xD: STORE_REQ_D 0xE: WAIT_ADC_EOC_D 0xF: GEN_IRQ_D
1	FIFO_NOT_EMPTY_FLAG	Indicates conversion sequencer request written to FIFO when it was not empty. 0x0: FIFO_EMPTY_WHEN_REQ_MADE 0x1: FIFO_NOT_EMPTY_WHEN_REQ_MADE
0	CONV_SEQ_TIMEOUT_STS	Indicates conversion sequencer conversion was triggered by time out. 0x0: CONV_SEQ_TIMEOUT_FALSE 0x1: CONV_SEQ_TIMEOUT_TRUE

0x00003310 VADC3_LC_VBMS_INT_RT_STS

Type: R
Clock: pbus_wrclk
Reset State: 0x00
Reset Name: uvlo_perph_rb

Interrupt Real Time Status Bits

VADC3_LC_VBMS_INT_RT_STS

Bits	Name	Description
5	MIN_LOW_THR_INT_RT_STS	ADC minimum output lower than low threshold. Active high signal. 0x0: MIN_LOW_THR_INT_FALSE 0x1: MIN_LOW_THR_INT_TRUE
4	LOW_THR_INT_RT_STS	ADC output lower than low threshold. Active high signal. 0x0: LOW_THR_INT_FALSE 0x1: LOW_THR_INT_TRUE
3	HIGH_THR_INT_RT_STS	ADC output higher than high threshold. Active high signal. 0x0: HIGH_THR_INT_FALSE 0x1: HIGH_THR_INT_TRUE

VADC3_LC_VBMS_INT_RT_STS (cont.)

Bits	Name	Description
2	CONV_SEQ_TIME-OUT_INT_RT_STS	Indicates conversion sequencer conversion was triggered by SBI register field conversion request time out. 0x0: CONV_SEQ_TIMEOUT_FALSE 0x1: CONV_SEQ_TIMEOUT_TRUE
1	FIFO_NOT_EMPTY-_INT_RT_STS	Indicates conversion sequencer request written to FIFO when it was not empty. 0x0: FIFO_NOT_EMPTY_INT_FALSE 0x1: FIFO_EMPTY_INT_TRUE
0	EOC_INT_RT_STS	Secure process end of conversion interrupt. Active high signal two tcxo_clk cycles wide. 0x0: CONV_COMPLETE_INT_FALSE 0x1: CONV_COMPLETE_INT_TRUE

0x00003311 VADC3_LC_VBMS_INT_SET_TYPE

Type: RW
Clock: pbus_wrclk
Reset State: 0x00
Reset Name: uvlo_perph_rb

0 = use level trigger interrupts, 1 = use edge trigger interrupts

VADC3_LC_VBMS_INT_SET_TYPE

Bits	Name	Description
5	MIN_LOW_THR_INT_SET_-TYPE	Minimum Low threshold interrupt set type 0x0: MIN_LOW_THR_INT_LEVEL 0x1: MIN_LOW_THR_INT_EDGE
4	LOW_THR_INT_SET_TYPE	Low threshold interrupt set type 0x0: LOW_THR_INT_LEVEL 0x1: LOW_THR_INT_EDGE
3	HIGH_THR_INT_SET_TYPE	High threshold interrupt set type 0x0: HIGH_THR_INT_LEVEL 0x1: HIGH_THR_INT_EDGE
2	CONV_SEQ_TIME-OUT_INT_SET_TYPE	Conversion sequencer timeout interrupt set type 0x0: CONV_SEQ_TIMEOUT_LEVEL 0x1: CONV_SEQ_TIMEOUT_EDGE
1	FIFO_NOT_EMPTY-_INT_SET_TYPE	FIFO not empty interrupt set type 0x0: FIFO_NOT_EMPTY_LEVEL 0x1: FIFO_NOT_EMPTY_EDGE

VADC3_LC_VBMS_INT_SET_TYPE (cont.)

Bits	Name	Description
0	EOC_SET_INT_TYPE	EOC interrupt set type 0x0: EOC_LEVEL 0x1: EOC_EDGE

0x00003312 VADC3_LC_VBMS_INT_POLARITY_HIGH

Type: RW
Clock: pbus_wrclk
Reset State: 0x00
Reset Name: uvlo_perph_rb

1= Interrupt will trigger on a level high (rising edge) event, 0 = level high triggering is disabled

VADC3_LC_VBMS_INT_POLARITY_HIGH

Bits	Name	Description
5	MIN_LOW_THR_INT_HIGH	Minimum Low threshold interrupt high polarity enabled 0x0: MIN_LOW_THR_INT_POL_HIGH_DISABLED 0x1: MIN_LOW_THR_INT_POL_HIGH_ENABLED
4	LOW_THR_INT_HIGH	Low threshold interrupt high polarity enabled 0x0: LOW_THR_INT_POL_HIGH_DISABLED 0x1: LOW_THR_INT_POL_HIGH_ENABLED
3	HIGH_THR_INT_HIGH	High threshold interrupt high polarity enabled 0x0: HIGH_THR_INT_POL_HIGH_DISABLED 0x1: HIGH_THR_INT_POL_HIGH_ENABLED
2	CONV_SEQ_TIME-OUT_INT_HIGH	Conversion sequencer interrupt high polarity enabled 0x0: CONV_SEQ_TIMEOUT_INT_POL_HIGH_DISABLED 0x1: CONV_SEQ_TIMEOUT_INT_POL_HIGH_ENABLED
1	FIFO_NOT_EMPTY-_INT_HIGH	FIFO not empty interrupt high polarity enabled 0x0: FIFO_NOT_EMPTY_INT_POL_HIGH_DISABLED 0x1: FIFO_NOT_EMPTY_INT_POL_HIGH_ENABLED
0	EOC_INT_HIGH	EOC interrupt high polarity enabled 0x0: EOC_INT_POL_HIGH_DISABLED 0x1: EOC_INT_POL_HIGH_ENABLED

0x00003313 VADC3_LC_VBMS_INT_POLARITY_LOW

Type: RW
Clock: pbus_wrclk
Reset State: 0x00
Reset Name: uvlo_perph_rb

1' = Interrupt will trigger on a level low (falling edge) event, '0' = level low triggering is disabled

VADC3_LC_VBMS_INT_POLARITY_LOW

Bits	Name	Description
5	MIN_LOW_THR_INT_HIGH	Minimum Low threshold interrupt low polarity enabled 0x0: MIN_LOW_THR_INT_POL_LOW_DISABLED 0x1: MIN_LOW_THR_INT_POL_LOW_ENABLED
4	LOW_THR_INT_HIGH	Low threshold interrupt low polarity enabled 0x0: LOW_THR_INT_POL_LOW_DISABLED 0x1: LOW_THR_INT_POL_LOW_ENABLED
3	HIGH_THR_INT_HIGH	High threshold interrupt low polarity enabled 0x0: HIGH_THR_INT_POL_LOW_DISABLED 0x1: HIGH_THR_INT_POL_LOW_ENABLED
2	CONV_SEQ_TIME-OUT_INT_LOW	Conversion sequencer interrupt low polarity enabled 0x0: CONV_SEQ_TIMEOUT_INT_POL_LOW_DISABLED 0x1: CONV_SEQ_TIMEOUT_INT_POL_LOW_ENABLED
1	FIFO_NOT_EMPTY-_INT_LOW	FIFO not empty interrupt low polarity enabled 0x0: FIFO_NOT_EMPTY_INT_POL_LOW_DISABLED 0x1: FIFO_NOT_EMPTY_INT_POL_LOW_ENABLED
0	EOC_INT_LOW	EOC interrupt low polarity enabled 0x0: EOC_INT_POL_LOW_DISABLED 0x1: EOC_INT_POL_LOW_ENABLED

0x00003314 VADC3_LC_VBMS_INT_LATCHED_CLR

Type: W
Clock: pbus_wrclk
Reset State: 0x00
Reset Name: uvlo_perph_rb

Writing a '1' to a bit in this register will rearm the interrupt when an interrupt is pending. It clears the internal sticky and sent bits

VADC3_LC_VBMS_INT_LATCHED_CLR

Bits	Name	Description
5	MIN_LOW_THR_INT_LATCHED_CLR	Minimum Low threshold interrupt latched clear
4	LOW_THR_INT_LATCHED_CLR	Low threshold interrupt latched clear
3	HIGH_THR_INT_LATCHED_CLR	High threshold interrupt latched clear
2	CONV_SEQ_TIMEOUT_INT_LATCHED_CLR	Conversion sequencer interrupt latched clear
1	FIFO_NOT_EMPTY_INT_LATCHED_CLR	FIFO not empty interrupt latched clear
0	EOC_INT_LATCHED_CLR	EOC interrupt latched clear

0x00003315 VADC3_LC_VBMS_INT_EN_SET

Type: RW
Clock: pbus_wrclk
Reset State: 0x00
Reset Name: uvlo_perph_rb

Writing '0' to a bit in this register has no effect. Writing a '1' to a bit in this register will enable the corresponding interrupt. Reading this register will readback enable status

PMIC_SET_MASK

VADC3_LC_VBMS_INT_EN_SET

Bits	Name	Description
5	MIN_LOW_THR_INT_EN_SET	Minimum Low threshold interrupt enable set 0x0: MIN_LOW_THR_INT_DISABLED 0x1: MIN_LOW_THR_INT_ENBLED
4	LOW_THR_INT_EN_SET	Low threshold interrupt enable set 0x0: LOW_THR_INT_DISABLED 0x1: LOW_THR_INT_ENBLED
3	HIGH_THR_INT_EN_SET	High threshold interrupt enable set 0x0: HIGH_THR_INT_DISABLED 0x1: HIGH_THR_INT_ENBLED
2	CONV_SEQ_TIME-OUT_INT_EN_SET	Conversion sequencer interrupt enable set 0x0: CONV_SEQ_TIMEOUT_INT_DISABLED 0x1: CONV_SEQ_TIMEOUT_INT_ENBLED
1	FIFO_NOT_EMPTY-_INT_EN_SET	FIFO not empty interrupt enable set 0x0: FIFO_NOT_EMPTY_INT_DISABLED 0x1: FIFO_NOT_EMPTY_INT_ENBLED
0	EOC_INT_EN_SET	EOC interrupt enable set 0x0: EOC_INT_DISABLED 0x1: EOC_INT_ENBLED

0x00003316 VADC3_LC_VBMS_INT_EN_CLR

Type: RW
Clock: pbus_wrclk
Reset State: 0x00
Reset Name: uvlo_perph_rb

Writing a '0' to a bit in this register has no effect. Writing a '1' to a bit in this register will disable the corresponding interrupt. Reading this register will readback enable status

PMIC_CLR_MASK=INT_EN_SET

VADC3_LC_VBMS_INT_EN_CLR

Bits	Name	Description
5	MIN_LOW_THR_INT_EN_-CLR	Minimum Low threshold interrupt enable clear 0x0: MIN_LOW_THR_INT_DISABLED 0x1: MIN_LOW_THR_INT_ENBLED
4	LOW_THR_INT_EN_CLR	Low threshold interrupt enable clear 0x0: LOW_THR_INT_DISABLED 0x1: LOW_THR_INT_ENBLED
3	HIGH_THR_INT_EN_CLR	High threshold interrupt enable clear 0x0: HIGH_THR_INT_DISABLED 0x1: HIGH_THR_INT_ENBLED
2	CONV_SEQ_TIME-OUT_INT_EN_CLR	Conversion sequencer interrupt enable clear 0x0: CONV_SEQ_TIMEOUT_INT_DISABLED 0x1: CONV_SEQ_TIMEOUT_INT_ENBLED
1	FIFO_NOT_EMPTY-_INT_EN_CLR	FIFO not empty interrupt enable clear 0x0: FIFO_NOT_EMPTY_INT_DISABLED 0x1: FIFO_NOT_EMPTY_INT_ENBLED
0	EOC_INT_EN_CLR	EOC interrupt enable clear 0x0: EOC_INT_DISABLED 0x1: EOC_INT_ENBLED

0x00003318 VADC3_LC_VBMS_INT_LATCHED_STS

Type: R
Clock: pbus_wrclk
Reset State: 0x00
Reset Name: uvlo_perph_rb

Debug: Latched (Sticky) Interrupt. '1' indicates that the interrupt has triggered. Once the latched bit is set it can only be cleared by writing the clear bit.

VADC3_LC_VBMS_INT_LATCHED_STS

Bits	Name	Description
5	MIN_LOW_THR_INT_LATC HED_STS	Minimum Low threshold interrupt latched 0x0: MIN_LOW_THR_INT_LATCHED_FALSE 0x1: MIN_LOW_THR_INT_LATCHED_TRUE
4	LOW_THR_INT_LATCHED_ STS	Low threshold interrupt latched 0x0: LOW_THR_INT_LATCHED_FALSE 0x1: LOW_THR_INT_LATCHED_TRUE
3	HIGH_THR_INT_LATCHED_ STS	High threshold interrupt latched 0x0: HIGH_THR_INT_LATCHED_FALSE 0x1: HIGH_THR_INT_LATCHED_TRUE

VADC3_LC_VBMS_INT_LATCHED_STS (cont.)

Bits	Name	Description
2	CONV_SEQ_TIME-OUT_INT_LATCHED_STS	Conversion sequencer interrupt latched 0x0: CONV_SEQ_TIMEOUT_INT_LATCHED_FALSE 0x1: CONV_SEQ_TIMEOUT_INT_LATCHED_TRUE
1	FIFO_NOT_EMPTY-_INT_LATCHED_STS	FIFO not empty interrupt latched 0x0: FIFO_NOT_EMPTY_INT_LATCHED_FALSE 0x1: FIFO_NOT_EMPTY_INT_LATCHED_TRUE
0	EOC_INT_LATCHED_STS	EOC interrupt latched 0x0: EOC_INT_LATCHED_FALSE 0x1: EOC_INT_LATCHED_TRUE

0x00003319 VADC3_LC_VBMS_INT_PENDING_STS

Type: R
Clock: pbus_wrclk
Reset State: 0x00
Reset Name: uvlo_perph_rb

Debug: Pending is set if interrupt has been sent but not cleared.

VADC3_LC_VBMS_INT_PENDING_STS

Bits	Name	Description
5	MIN_LOW_THR_INT_PENDING_STS	Minimum Low threshold interrupt pending 0x0: MIN_LOW_THR_INT_PENDING_FALSE 0x1: MIN_LOW_THR_INT_PENDING_TRUE
4	LOW_THR_INT_PENDING_STS	Low threshold interrupt pending 0x0: LOW_THR_INT_PENDING_FALSE 0x1: LOW_THR_INT_PENDING_TRUE
3	HIGH_THR_INT_PENDING_STS	High threshold interrupt pending 0x0: HIGH_THR_INT_PENDING_FALSE 0x1: HIGH_THR_INT_PENDING_TRUE
2	CONV_SEQ_TIMEOUT_INT_PEND-ING_STS	Conversion sequencer interrupt pending 0x0: CONV_SEQ_TIMEOUT_INT_PENDING_FALSE 0x1: CONV_SEQ_TIMEOUT_INT_PENDING_TRUE
1	FIFO_NOT_EMPTY_INT_PENDING_STS	FIFO not empty interrupt pending 0x0: FIFO_NOT_EMPTY_INT_PENDING_FALSE 0x1: FIFO_NOT_EMPTY_INT_PENDING_TRUE
0	EOC_INT_PENDING_STS	EOC interrupt pending 0x0: EOC_INT_PENDING_FALSE 0x1: EOC_INT_PENDING_TRUE

0x0000331A VADC3_LC_VBMS_INT_MID_SEL

Type: RW
Clock: pbus_wrclk
Reset State: 0x00
Reset Name: uvlo_perph_rb

Selects the MID that will receive the interrupt

VADC3_LC_VBMS_INT_MID_SEL

Bits	Name	Description
1:0	INT_MID_SEL	Selects the MID that will receive the interrupt

0x0000331B VADC3_LC_VBMS_INT_PRIORITY

Type: RW
Clock: pbus_wrclk
Reset State: 0x00
Reset Name: uvlo_perph_rb

Selects the SPMI interrupt priority

VADC3_LC_VBMS_INT_PRIORITY

Bits	Name	Description
0	INT_PRIORITY	Selects the SPMI interrupt priority 0x0: SR 0x1: A

0x00003340 VADC3_LC_VBMS_MODE_CTL

Type: RW
Clock: pbus_wrclk
Reset State: 0x03
Reset Name: uvlo_perph_rb

Settings Common to Input and Output

VADC3_LC_VBMS_MODE_CTL

Bits	Name	Description
4:3	OP_MODE	Selects basic mode of operation: 00=Normal Mode - Single measurement 01=Conversion Sequencer - Single measurement using conversion sequencer 10=Measurement Interval - Single or Continuous measurements at specified delay/interval 0x0: NORM_MODE 0x1: CONV_SEQ_MODE 0x2: MEAS_INT_MODE
2	VREF_XO_THM_FORCE	When cleared, VDD_REF is connected to XO thermistor in active mode, disconnected in sleep mode When set, force VDD_REF to be connected to the XO thermistor regardless the status of sleep 0x0: VREF_XO_THM_FORCE_FALSE 0x1: VREF_XO_THM_FORCE_TRUE
1	AMUX_TRIM_EN	Enable AMUX trim 0x0: AMUX_TRIM_DISABLED 0x1: AMUX_TRIM_ENABLED
0	ADC_TRIM_EN	Enable ADC trim 0x0: ADC_TRIM_DISABLED 0x1: ADC_TRIM_ENABLED

0x00003346 VADC3_LC_VBMS_EN_CTL1

Type: RW
Clock: pbus_wrclk
Reset State: 0x00
Reset Name: uvlo_perph_rb

Enables ADC module.

VADC3_LC_VBMS_EN_CTL1

Bits	Name	Description
7	ADC_EN	Enables ADC module. 0x0: ADC_DISABLED 0x1: ADC_ENABLED

0x00003348 VADC3_LC_VBMS_ADC_CH_SEL_CTL

Type: RW
Clock: pbus_wrclk
Reset State: 0x06
Reset Name: uvlo_perph_rb

ADC Channel selection.

VADC3_LC_VBMS_ADC_CH_SEL_CTL

Bits	Name	Description
7:0	ADC_CH_SEL	ADC Channel selection.

0x00003350 VADC3_LC_VBMS_ADC_DIG_PARAM

Type: RW
Clock: pbus_wrclk
Reset State: 0x04
Reset Name: uvlo_perph_rb

ADC Digital Parameters

VADC3_LC_VBMS_ADC_DIG_PARAM

Bits	Name	Description
3:2	DEC_RATIO_SEL	Decimation ratio: 0x0: DECI_512 0x1: DECI_1K 0x2: DECI_2K 0x3: DECI_4K
1:0	CLK_SEL	Select ADC clock rate: 0x0: CLK_SEL_2P4MHZ 0x1: CLK_SEL_4P8MHZ 0x2: CLK_SEL_9P6MHZ 0x3: CLK_SEL_19P2MHZ

0x00003351 VADC3_LC_VBMS_HW_SETTLE_DELAY

Type: RW
Clock: pbus_wrclk
Reset State: 0x00
Reset Name: uvlo_perph_rb

Settle Delay

VADC3_LC_VBMS_HW_SETTLE_DELAY

Bits	Name	Description
3:0	HW_SETTLE_DELAY	Time between AMUX getting configured and the ADC starting conversion. Delay = 100us*(value) for value<11, and 2ms*(value-10) otherwise 0x0: HW_SETTLE_DELAY_0US 0x1: HW_SETTLE_DELAY_100US 0x2: HW_SETTLE_DELAY_200US 0x3: HW_SETTLE_DELAY_300US 0x4: HW_SETTLE_DELAY_400US 0x5: HW_SETTLE_DELAY_500US 0x6: HW_SETTLE_DELAY_600US 0x7: HW_SETTLE_DELAY_700US 0x8: HW_SETTLE_DELAY_800US 0x9: HW_SETTLE_DELAY_900US 0xA: HW_SETTLE_DELAY_1MS 0xB: HW_SETTLE_DELAY_2MS 0xC: HW_SETTLE_DELAY_4MS 0xD: HW_SETTLE_DELAY_6MS 0xE: HW_SETTLE_DELAY_8MS 0xF: HW_SETTLE_DELAY_10MS

0x00003352 VADC3_LC_VBMS_CONV_REQ

Type: W
Clock: pbus_wrclk
Reset State: 0x00
Reset Name: req_rb

Conversion Request

VADC3_LC_VBMS_CONV_REQ

Bits	Name	Description
7	REQ	Conversion request strobe. When bit is asserted the arbiter stores a descriptor in the conversion request queue. Bit is cleared when ADC conversion is completed. 0x0: CONV_REQ_FALSE 0x1: CONV_REQ_TRUE

0x00003354 VADC3_LC_VBMS_CONV_SEQ_CTL

Type: RW
Clock: pbus_wrclk
Reset State: 0x45
Reset Name: uvlo_perph_rb

Conversion Sequencer Control

VADC3_LC_VBMS_CONV_SEQ_CTL

Bits	Name	Description
7:4	CONV_SEQ_HOLDOFF	Select delay from conversion trigger signal (i.e. adc_conv_seq_trig) transition to ADC enable. Delay = 25us*(value+1). Actual delay will be longer if request is stored in a non empty FIFO and/or conversion needs to wait for LDO OK handshake. 0x0: SEQ_HOLD_25US 0x1: SEQ_HOLD_50US 0x2: SEQ_HOLD_75US 0x3: SEQ_HOLD_100US 0x4: SEQ_HOLD_125US 0x5: SEQ_HOLD_150US 0x6: SEQ_HOLD_175US 0x7: SEQ_HOLD_200US 0x8: SEQ_HOLD_225US 0x9: SEQ_HOLD_250US 0xA: SEQ_HOLD_275US 0xB: SEQ_HOLD_300US 0xC: SEQ_HOLD_325US 0xD: SEQ_HOLD_350US 0xE: SEQ_HOLD_375US 0xF: SEQ_HOLD_400US
3:0	CONV_SEQ_TIMEOUT	Select delay (0 to 15ms) from conversion request to triggering conversion sequencer hold off timer. 0x0: SEQ_TIMEOUT_0MS 0x1: SEQ_TIMEOUT_1MS 0x2: SEQ_TIMEOUT_2MS 0x3: SEQ_TIMEOUT_3MS 0x4: SEQ_TIMEOUT_4MS 0x5: SEQ_TIMEOUT_5MS 0x6: SEQ_TIMEOUT_6MS 0x7: SEQ_TIMEOUT_7MS 0x8: SEQ_TIMEOUT_8MS 0x9: SEQ_TIMEOUT_9MS 0xA: SEQ_TIMEOUT_10MS 0xB: SEQ_TIMEOUT_11MS 0xC: SEQ_TIMEOUT_12MS 0xD: SEQ_TIMEOUT_13MS 0xE: SEQ_TIMEOUT_14MS 0xF: SEQ_TIMEOUT_15MS

0x00003355 VADC3_LC_VBMS_CONV_SEQ_TRIG_CTL

Type: RW
Clock: pbus_wrclk
Reset State: 0x00
Reset Name: uvlo_perph_rb

Conversion Sequencer Trigger Select

VADC3_LC_VBMS_CONV_SEQ_TRIG_CTL

Bits	Name	Description
7	CONV_SEQ_TRIG_COND	Select conversion trigger condition(s) that starts ADC conversion hold off timer. 0x0 - Falling edge 0x1 - Rising edge
1:0	CONV_SEQ_TRIG_SEL	Select conversion sequencer trigger input signal. 0x0: ADC_TRIG0 0x1: ADC_TRIG1 0x2: ADC_TRIG2 0x3: ADC_TRIG3

0x00003357 VADC3_LC_VBMS_MEAS_INTERVAL_CTL

Type: RW
Clock: pbus_wrclk
Reset State: 0x00
Reset Name: uvlo_perph_rb

Interval Mode Control

VADC3_LC_VBMS_MEAS_INTERVAL_CTL

Bits	Name	Description
3:0	MEAS_INTERVAL_TIME	Select measurement interval time (i.e., If value=0, use 0ms, else use 2^(value+4)/32768). 0x0: MEAS_INTERVAL_0MS 0x1: MEAS_INTERVAL_1P0MS 0x2: MEAS_INTERVAL_2P0MS 0x3: MEAS_INTERVAL_3P9MS 0x4: MEAS_INTERVAL_7P8MS 0x5: MEAS_INTERVAL_15P6MS 0x6: MEAS_INTERVAL_31P3MS 0x7: MEAS_INTERVAL_62P5MS 0x8: MEAS_INTERVAL_125MS 0x9: MEAS_INTERVAL_250MS 0xA: MEAS_INTERVAL_500MS 0xB: MEAS_INTERVAL_1S 0xC: MEAS_INTERVAL_2S 0xD: MEAS_INTERVAL_4S 0xE: MEAS_INTERVAL_8S 0xF: MEAS_INTERVAL_16S

0x00003359 VADC3_LC_VBMS_MEAS_INTERVAL_OP_CTL

Type: RW
Clock: pbus_wrclk
Reset State: 0x00
Reset Name: uvlo_perph_rb

Interval mode select

VADC3_LC_VBMS_MEAS_INTERVAL_OP_CTL

Bits	Name	Description
7	MEAS_INTERVAL_OP	Interval mode select 0x0: INTERVAL_MODE_DISABLED 0x1: INTERVAL_MODE_ENABLED

0x0000335A VADC3_LC_VBMS_FAST_AVG_CTL

Type: RW
Clock: pbus_wrclk
Reset State: 0x00
Reset Name: uvlo_perph_rb

Fast Average Control

VADC3_LC_VBMS_FAST_AVG_CTL

Bits	Name	Description
3:0	FAST_AVG_SAMPLES	Select number of samples for use in fast average mode (i.e. 2^(value). 0x0: AVG_1_SAMPLE 0x1: AVG_2_SAMPLES 0x2: AVG_4_SAMPLES 0x3: AVG_8_SAMPLES 0x4: AVG_16_SAMPLES 0x5: AVG_32_SAMPLES 0x6: AVG_64_SAMPLES 0x7: AVG_128_SAMPLES 0x8: AVG_256_SAMPLES 0x9: AVG_512_SAMPLES

0x0000335B VADC3_LC_VBMS_FAST_AVG_EN

Type: RW
Clock: pbus_wrclk
Reset State: 0x00
Reset Name: uvlo_perph_rb

Fast Average Enable

VADC3_LC_VBMS_FAST_AVG_EN

Bits	Name	Description
7	FAST_AVG_EN	Select low latency for multiple conversions 0x0: FAST_AVG_DISABLED 0x1: FAST_AVG_ENABLED

0x0000335C VADC3_LC_VBMS_LOW_THR0

Type: RW
Clock: pbus_wrclk
Reset State: 0x00
Reset Name: uvlo_perph_rb

Low Threshold Byte 0

VADC3_LC_VBMS_LOW_THR0

Bits	Name	Description
7:0	LOW_THR_7_0	Low byte of low threshold detector

0x0000335D VADC3_LC_VBMS_LOW_THR1

Type: RW
Clock: pbus_wrclk
Reset State: 0x00
Reset Name: uvlo_perph_rb

Low Threshold Byte 1

VADC3_LC_VBMS_LOW_THR1

Bits	Name	Description
7:0	LOW_THR_15_8	High byte of low threshold detector

0x0000335E VADC3_LC_VBMS_HIGH_THR0

Type: RW
Clock: pbus_wrclk
Reset State: 0xFF
Reset Name: uvlo_perph_rb

High Threshold Byte 0

VADC3_LC_VBMS_HIGH_THR0

Bits	Name	Description
7:0	HIGH_THR_7_0	Low byte of high threshold detector

0x0000335F VADC3_LC_VBMS_HIGH_THR1

Type: RW
Clock: pbus_wrclk
Reset State: 0xFF
Reset Name: uvlo_perph_rb

High Threshold Byte 1

VADC3_LC_VBMS_HIGH_THR1

Bits	Name	Description
7:0	HIGH_THR_15_8	High byte of high threshold detector

0x00003360 VADC3_LC_VBMS_DATA0

Type: R
Clock: pbus_wrclk
Reset State: 0x00000000
Reset Name: uvlo_perph_rb

ADC Sample Byte 0

VADC3_LC_VBMS_DATA0

Bits	Name	Description
7:0	DATA_7_0	DEF: X Low byte of ADC output

0x00003361 VADC3_LC_VBMS_DATA1

Type: R
Clock: pbus_wrclk
Reset State: 0x00000000
Reset Name: uvlo_perph_rb

ADC Sample Byte 1

VADC3_LC_VBMS_DATA1

Bits	Name	Description
7:0	DATA_15_8	DEF: X High byte of ADC output

0x00003362 VADC3_LC_VBMS_MIN_LOW_THR0

Type: RW
Clock: pbus_wrclk
Reset State: 0x00
Reset Name: uvlo_perph_rb

Minimum Low Threshold Byte 0

VADC3_LC_VBMS_MIN_LOW_THR0

Bits	Name	Description
7:0	MIN_LOW_THR_7_0	Low byte of minimum low threshold detector

0x00003363 VADC3_LC_VBMS_MIN_LOW_THR1

Type: RW
Clock: pbus_wrclk
Reset State: 0x00
Reset Name: uvlo_perph_rb

Minimum Low Threshold Byte 1

VADC3_LC_VBMS_MIN_LOW_THR1

Bits	Name	Description
7:0	MIN_LOW_THR_15_8	High byte of minimum low threshold detector

0x00003366 VADC3_LC_VBMS_MIN_DATA0

Type: R
Clock: pbus_wrclk
Reset State: 0x00000000
Reset Name: uvlo_perph_rb

Minimum ADC Sample Byte 0

VADC3_LC_VBMS_MIN_DATA0

Bits	Name	Description
7:0	MIN_DATA_7_0	DEF: X Low byte of minimum ADC output

0x00003367 VADC3_LC_VBMS_MIN_DATA1

Type: R
Clock: pbus_wrclk
Reset State: 0x00000000
Reset Name: uvlo_perph_rb

Minimum ADC Sample Byte 1

VADC3_LC_VBMS_MIN_DATA1

Bits	Name	Description
7:0	MIN_DATA_15_8	DEF: X High byte of minimum ADC output

20 VADC2_LC_BTM_2_VADC_BTM

0x00003400 - 0x00003403 RESERVED

0x00003404 VADC2_LC_BTM_2_PERPH_TYPE

Type: R
Clock: pbus_wrclk
Reset State: 0x08
Reset Name: N/A

Peripheral Type

PMIC_CONSTANT

VADC2_LC_BTM_2_PERPH_TYPE

Bits	Name	Description
7:0	TYPE	ADC

0x00003405 VADC2_LC_BTM_2_PERPH_SUBTYPE

Type: R
Clock: pbus_wrclk
Reset State: 0x22
Reset Name: N/A

Peripheral SubType

VADC2_LC_BTM_2_PERPH_SUBTYPE

Bits	Name	Description
7:0	SUBTYPE	ADC sub type

0x00003408 VADC2_LC_BTM_2_STATUS1

Type: R
Clock: pbus_wrclk
Reset State: 0x01
Reset Name: N/A

Status Registers

VADC2_LC_BTM_2_STATUS1

Bits	Name	Description
4:3	OP_MODE	Selects basic mode of operation 0x0: NORM_MODE 0x1: CONV_SEQ_MODE 0x2: MEAS_INT_MODE
2	MEAS_INTERVAL_EN_STS	Interval Mode 0x0: INTERVAL_MODE_DISABLED 0x1: INTERVAL_MODE_ENABLED
1	REQ_STS	REQ_STS mirrors the REQ bit. When REQ is asserted the arbiter stores a descriptor in the conversion request queue. Bit is cleared when ADC conversion is completed. 0x0: REQ_NOT_IN_PROGRESS 0x1: REQ_IN_PROGRESS
0	EOC	End of conversion status flag. Bit is de-asserted when arbiter is servicing a conversion request and asserted when conversion is completed. After a conversion is requested, the EOC and REQ_STS bits can be polled to determine ADC conversion status as follows: REQ_STS EOC Arbiter state 1 1 Waiting for ADC to complete another process's conversion request. 1 0 ADC conversion occurring. 0 1 ADC conversion completed. 0 0 Invalid 0x0: CONV_NOT_COMPLETE 0x1: CONV_COMPLETE

0x00003409 VADC2_LC_BTM_2_STATUS2

Type: R
Clock: pbus_wrclk
Reset State: 0x00
Reset Name: N/A

Status Registers

VADC2_LC_BTM_2_STATUS2

Bits	Name	Description
7:3	CONV_SEQ_STATE	Conversion request and control states selected by SEL_FSM register field. SEL_FSM Signal 0 {conversion error0, Request0 FSM state[3;0]} 1 {conversion error1, Request1 FSM state[3;0]} 2 {conversion error2, Request2 FSM state[3;0]} 3 {conversion error3, Request3 FSM state[3;0]} 4 {conversion error4, Request4 FSM state[3;0]} 5 {conversion error5, Request5 FSM state[3;0]} 6 {conversion error6, Request6 FSM state[3;0]} 7 {conversion error7, Request7 FSM state[3;0]} 8 Sample average count0[4:0] 9 Sample average count1[4:0] 10 Sample average count2[4:0] 11 Sample average count3[4:0] 12 Sample average count4[4:0] 13 Sample average count5[4:0] 14 Sample average count6[4:0] 15 Sample average count7[4:0] Enumerations are Request FSMs state[3:0]. 0x0: IDLE_S 0x1: WAIT_TRIG_S 0x2: WAIT_HOLDOFF_S 0x3: CLEAR_ACC_S 0x4: STORE_REQ_S 0x5: WAIT_ADC_EOC_S 0x6: GEN_IRQ_S 0x7: IDLE_D 0x8: WAIT_TRIG_D
		0x8: WAIT_TRIG_D 0x9: WAIT_HOLDOFF_D 0xA: CLEAR_ACC_D 0xB: STORE_WRITE_POINTERS 0xC: COMPARE_RW_POINTERS 0xD: STORE_REQ_D 0xE: WAIT_ADC_EOC_D 0xF: GEN_IRQ_D
1	FIFO_NOT_EMPTY_FLAG	Indicates conversion sequencer request written to FIFO when it was not empty. 0x0: FIFO_EMPTY_WHEN_REQ_MADE 0x1: FIFO_NOT_EMPTY_WHEN_REQ_MADE

VADC2_LC_BTM_2_STATUS2 (cont.)

Bits	Name	Description
0	CONV_SEQ_TIMEOUT_STS	Indicates conversion sequencer conversion was triggered by time out. 0x0: CONV_SEQ_TIMEOUT_FALSE 0x1: CONV_SEQ_TIMEOUT_TRUE

0x0000340A VADC2_LC_BTM_2_STATUS_LOW

Type: R
Clock: pbus_wrclk
Reset State: 0x00
Reset Name: N/A

Indicates measurement(s) where VADC read is less than low threshold.

VADC2_LC_BTM_2_STATUS_LOW

Bits	Name	Description
7	M7_LOW	M7 measurement under low threshold 0x0: M7_LOW_FALSE 0x1: M7_LOW_TRUE
6	M6_LOW	M6 measurement under low threshold 0x0: M6_LOW_FALSE 0x1: M6_LOW_TRUE
5	M5_LOW	M5 measurement under low threshold 0x0: M5_LOW_FALSE 0x1: M5_LOW_TRUE
4	M4_LOW	M4 measurement under low threshold 0x0: M4_LOW_FALSE 0x1: M4_LOW_TRUE
3	M3_LOW	M3 measurement under low threshold 0x0: M3_LOW_FALSE 0x1: M3_LOW_TRUE
2	M2_LOW	M2 measurement under low threshold 0x0: M2_LOW_FALSE 0x1: M2_LOW_TRUE
1	M1_LOW	M1 measurement under low threshold 0x0: M1_LOW_FALSE 0x1: M1_LOW_TRUE
0	M0_LOW	M0 measurement under low threshold 0x0: M0_LOW_FALSE 0x1: M0_LOW_TRUE

0x0000340B VADC2_LC_BTM_2_STATUS_HIGH

Type: R
Clock: pbus_wrclk
Reset State: 0x00
Reset Name: N/A

Indicates measurement(s) where VADC read is greater than high threshold.

VADC2_LC_BTM_2_STATUS_HIGH

Bits	Name	Description
7	M7_HIGH	M7 measurement above high threshold 0x0: M7_HIGH_FALSE 0x1: M7_HIGH_TRUE
6	M6_HIGH	M6 measurement above high threshold 0x0: M6_HIGH_FALSE 0x1: M6_HIGH_TRUE
5	M5_HIGH	M5 measurement above high threshold 0x0: M5_HIGH_FALSE 0x1: M5_HIGH_TRUE
4	M4_HIGH	M4 measurement above high threshold 0x0: M4_HIGH_FALSE 0x1: M4_HIGH_TRUE
3	M3_HIGH	M3 measurement above high threshold 0x0: M3_HIGH_FALSE 0x1: M3_HIGH_TRUE
2	M2_HIGH	M2 measurement above high threshold 0x0: M2_HIGH_FALSE 0x1: M2_HIGH_TRUE
1	M1_HIGH	M1 measurement above high threshold 0x0: M1_HIGH_FALSE 0x1: M1_HIGH_TRUE
0	M0_HIGH	M0 measurement above high threshold 0x0: M0_HIGH_FALSE 0x1: M0_HIGH_TRUE

0x00003410 VADC2_LC_BTM_2_INT_RT_STS

Type: R
Clock: pbus_wrclk
Reset State: 0x00
Reset Name: N/A

0 = use level trigger interrupts, 1 = use edge trigger interrupts

VADC2_LC_BTM_2_INT_RT_STS

Bits	Name	Description
4	LOW_THR_INT_RT_STS	Low threshold interrupt set type 0x0: LOW_THR_INT_LEVEL 0x1: LOW_THR_INT_EDGE
3	HIGH_THR_INT_RT_STS	High threshold interrupt set type 0x0: HIGH_THR_INT_LEVEL 0x1: HIGH_THR_INT_EDGE
2	CONV_SEQ_TIME-OUT_INT_RT_STS	Conversion sequencer timeout interrupt set type 0x0: CONV_SEQ_TIMEOUT_LEVEL 0x1: CONV_SEQ_TIMEOUT_EDGE
1	FIFO_NOT_EMPTY-_INT_RT_STS	FIFO not empty interrupt set type 0x0: FIFO_NOT_EMPTY_LEVEL 0x1: FIFO_NOT_EMPTY_EDGE
0	EOC_INT_RT_STS	EOC interrupt set type 0x0: EOC_LEVEL 0x1: EOC_EDGE

0x00003411 VADC2_LC_BTM_2_INT_SET_TYPE

Type: RW
Clock: pbus_wrclk
Reset State: 0x00
Reset Name: uvlo_perph_rb

1= Interrupt will trigger on a level high (rising edge) event, 0 = level high triggering is disabled

VADC2_LC_BTM_2_INT_SET_TYPE

Bits	Name	Description
4	LOW_THR_INT_SET_TYPE	Low threshold interrupt high polarity enabled 0x0: LOW_THR_INT_POL_HIGH_DISABLED 0x1: LOW_THR_INT_POL_HIGH_ENABLED
3	HIGH_THR_INT_SET_TYPE	High threshold interrupt high polarity enabled 0x0: HIGH_THR_INT_POL_HIGH_DISABLED 0x1: HIGH_THR_INT_POL_HIGH_ENABLED
2	CONV_SEQ_TIME-OUT_INT_SET_TYPE	Conversion sequencer interrupt high polarity enabled 0x0: CONV_SEQ_TIMEOUT_INT_POL_HIGH_DISABLED 0x1: CONV_SEQ_TIMEOUT_INT_POL_HIGH_ENABLED
1	FIFO_NOT_EMPTY-_INT_SET_TYPE	FIFO not empty interrupt high polarity enabled 0x0: FIFO_NOT_EMPTY_INT_POL_HIGH_DISABLED 0x1: FIFO_NOT_EMPTY_INT_POL_HIGH_ENABLED

VADC2_LC_BTM_2_INT_SET_TYPE (cont.)

Bits	Name	Description
0	EOC_SET_INT_TYPE	EOC interrupt high polarity enabled 0x0: EOC_INT_POL_HIGH_DISABLED 0x1: EOC_INT_POL_HIGH_ENABLED

0x00003412 VADC2_LC_BTM_2_INT_POLARITY_HIGH

Type: RW
Clock: pbus_wrclk
Reset State: 0x00
Reset Name: uvlo_perph_rb

1' = Interrupt will trigger on a level low (falling edge) event, '0' = level low triggering is disabled

VADC2_LC_BTM_2_INT_POLARITY_HIGH

Bits	Name	Description
4	LOW_THR_INT_HIGH	Low threshold interrupt low polarity enabled 0x0: LOW_THR_INT_POL_LOW_DISABLED 0x1: LOW_THR_INT_POL_LOW_ENABLED
3	HIGH_THR_INT_HIGH	High threshold interrupt low polarity enabled 0x0: HIGH_THR_INT_POL_LOW_DISABLED 0x1: HIGH_THR_INT_POL_LOW_ENABLED
2	CONV_SEQ_TIME-OUT_INT_HIGH	Conversion sequencer interrupt low polarity enabled 0x0: CONV_SEQ_TIMEOUT_INT_POL_LOW_DISABLED 0x1: CONV_SEQ_TIMEOUT_INT_POL_LOW_ENABLED
1	FIFO_NOT_EMPTY-_INT_HIGH	FIFO not empty interrupt low polarity enabled 0x0: FIFO_NOT_EMPTY_INT_POL_LOW_DISABLED 0x1: FIFO_NOT_EMPTY_INT_POL_LOW_ENABLED
0	EOC_INT_HIGH	EOC interrupt low polarity enabled 0x0: EOC_INT_POL_LOW_DISABLED 0x1: EOC_INT_POL_LOW_ENABLED

0x00003413 VADC2_LC_BTM_2_INT_POLARITY_LOW

Type: RW
Clock: pbus_wrclk
Reset State: 0x00
Reset Name: uvlo_perph_rb

1' = Interrupt will trigger on a level low (falling edge) event, '0' = level low triggering is disabled

VADC2_LC_BTM_2_INT_POLARITY_LOW

Bits	Name	Description
4	LOW_THR_INT_HIGH	Low threshold interrupt low polarity enabled 0x0: LOW_THR_INT_POL_LOW_DISABLED 0x1: LOW_THR_INT_POL_LOW_ENABLED
3	HIGH_THR_INT_HIGH	High threshold interrupt low polarity enabled 0x0: HIGH_THR_INT_POL_LOW_DISABLED 0x1: HIGH_THR_INT_POL_LOW_ENABLED
2	CONV_SEQ_TIME-OUT_INT_LOW	Conversion sequencer interrupt low polarity enabled 0x0: CONV_SEQ_TIMEOUT_INT_POL_LOW_DISABLED 0x1: CONV_SEQ_TIMEOUT_INT_POL_LOW_ENABLED
1	FIFO_NOT_EMPTY-_INT_LOW	FIFO not empty interrupt low polarity enabled 0x0: FIFO_NOT_EMPTY_INT_POL_LOW_DISABLED 0x1: FIFO_NOT_EMPTY_INT_POL_LOW_ENABLED
0	EOC_INT_LOW	EOC interrupt low polarity enabled 0x0: EOC_INT_POL_LOW_DISABLED 0x1: EOC_INT_POL_LOW_ENABLED

0x00003414 VADC2_LC_BTM_2_INT_LATCHED_CLR

Type: W
Clock: pbus_wrclk
Reset State: 0x00
Reset Name: uvlo_perph_rb

Writing a '1' to a bit in this register will rearm the interrupt when an interrupt is pending. It clears the internal sticky and sent bits

VADC2_LC_BTM_2_INT_LATCHED_CLR

Bits	Name	Description
4	LOW_THR_INT_LATCHED_CLR	Low threshold interrupt latched clear
3	HIGH_THR_INT_LATCHED_CLR	High threshold interrupt latched clear
2	CONV_SEQ_TIMEOUT_INT_LATCHED_CLR	Conversion sequencer interrupt latched clear
1	FIFO_NOT_EMPTY_INT_LATCHED_CLR	FIFO not empty interrupt latched clear
0	EOC_INT_LATCHED_CLR	EOC interrupt latched clear

0x00003415 VADC2_LC_BTM_2_INT_EN_SET

Type: RW
Clock: pbus_wrclk
Reset State: 0x00
Reset Name: uvlo_perph_rb

Writing '0' to a bit in this register has no effect. Writing a '1' to a bit in this register will enable the corresponding interrupt. Reading this register will readback enable status

PMIC_SET_MASK

VADC2_LC_BTM_2_INT_EN_SET

Bits	Name	Description
4	LOW_THR_INT_EN_SET	Low threshold interrupt enable set 0x0: LOW_THR_INT_DISABLED 0x1: LOW_THR_INT_ENBLED
3	HIGH_THR_INT_EN_SET	High threshold interrupt enable set 0x0: HIGH_THR_INT_DISABLED 0x1: HIGH_THR_INT_ENBLED
2	CONV_SEQ_TIME-OUT_INT_EN_SET	Conversion sequencer interrupt enable set 0x0: CONV_SEQ_TIMEOUT_INT_DISABLED 0x1: CONV_SEQ_TIMEOUT_INT_ENBLED
1	FIFO_NOT_EMPTY-_INT_EN_SET	FIFO not empty interrupt enable set 0x0: FIFO_NOT_EMPTY_INT_DISABLED 0x1: FIFO_NOT_EMPTY_INT_ENBLED
0	EOC_INT_EN_SET	EOC interrupt enable set 0x0: EOC_INT_DISABLED 0x1: EOC_INT_ENBLED

0x00003416 VADC2_LC_BTM_2_INT_EN_CLR

Type: RW
Clock: pbus_wrclk
Reset State: 0x00
Reset Name: uvlo_perph_rb

Writing a '0' to a bit in this register has no effect. Writing a '1' to a bit in this register will disable the corresponding interrupt. Reading this register will readback enable status

PMIC_CLR_MASK=INT_EN_SET

VADC2_LC_BTM_2_INT_EN_CLR

Bits	Name	Description
4	LOW_THR_INT_EN_CLR	Low threshold interrupt enable clear 0x0: LOW_THR_INT_DISABLED 0x1: LOW_THR_INT_ENBLED
3	HIGH_THR_INT_EN_CLR	High threshold interrupt enable clear 0x0: HIGH_THR_INT_DISABLED 0x1: HIGH_THR_INT_ENBLED
2	CONV_SEQ_TIME-OUT_INT_EN_CLR	Conversion sequencer interrupt enable clear 0x0: CONV_SEQ_TIMEOUT_INT_DISABLED 0x1: CONV_SEQ_TIMEOUT_INT_ENBLED
1	FIFO_NOT_EMPTY-_INT_EN_CLR	FIFO not empty interrupt enable clear 0x0: FIFO_NOT_EMPTY_INT_DISABLED 0x1: FIFO_NOT_EMPTY_INT_ENBLED
0	EOC_INT_EN_CLR	EOC interrupt enable clear 0x0: EOC_INT_DISABLED 0x1: EOC_INT_ENBLED

0x00003418 VADC2_LC_BTM_2_INT_LATCHED_STS

Type: R
Clock: pbus_wrclk
Reset State: 0x00
Reset Name: N/A

Debug: Latched (Sticky) Interrupt. '1' indicates that the interrupt has triggered. Once the latched bit is set it can only be cleared by writing the clear bit.

VADC2_LC_BTM_2_INT_LATCHED_STS

Bits	Name	Description
4	LOW_THR_INT_LATCHED_STS	Low threshold interrupt latched 0x0: LOW_THR_INT_LATCHED_FALSE 0x1: LOW_THR_INT_LATCHED_TRUE
3	HIGH_THR_INT_LATCHED_STS	High threshold interrupt latched 0x0: HIGH_THR_INT_LATCHED_FALSE 0x1: HIGH_THR_INT_LATCHED_TRUE
2	CONV_SEQ_TIME-OUT_INT_LATCHED_STS	Conversion sequencer interrupt latched 0x0: CONV_SEQ_TIMEOUT_INT_LATCHED_FALSE 0x1: CONV_SEQ_TIMEOUT_INT_LATCHED_TRUE
1	FIFO_NOT_EMPTY-_INT_LATCHED_STS	FIFO not empty interrupt latched 0x0: FIFO_NOT_EMPTY_INT_LATCHED_FALSE 0x1: FIFO_NOT_EMPTY_INT_LATCHED_TRUE

VADC2_LC_BTM_2_INT_LATCHED_STS (cont.)

Bits	Name	Description
0	EOC_INT_LATCHED_STS	EOC interrupt latched 0x0: EOC_INT_LATCHED_FALSE 0x1: EOC_INT_LATCHED_TRUE

0x00003419 VADC2_LC_BTM_2_INT_PENDING_STS

Type: R
Clock: pbus_wrclk
Reset State: 0x00
Reset Name: N/A

Debug: Pending is set if interrupt has been sent but not cleared.

VADC2_LC_BTM_2_INT_PENDING_STS

Bits	Name	Description
4	LOW_THR_INT_PEND-ING_STS	Low threshold interrupt pending 0x0: LOW_THR_INT_PENDING_FALSE 0x1: LOW_THR_INT_PENDING_TRUE
3	HIGH_THR_INT_PEND-ING_STS	High threshold interrupt pending 0x0: HIGH_THR_INT_PENDING_FALSE 0x1: HIGH_THR_INT_PENDING_TRUE
2	CONV_SEQ_TIME-OUT_INT_PENDING_STS	Conversion sequencer interrupt pending 0x0: CONV_SEQ_TIMEOUT_INT_PENDING_FALSE 0x1: CONV_SEQ_TIMEOUT_INT_PENDING_TRUE
1	FIFO_NOT_EMPTY-_INT_PENDING_STS	FIFO not empty interrupt pending 0x0: FIFO_NOT_EMPTY_INT_PENDING_FALSE 0x1: FIFO_NOT_EMPTY_INT_PENDING_TRUE
0	EOC_INT_PENDING_STS	EOC interrupt pending 0x0: EOC_INT_PENDING_FALSE 0x1: EOC_INT_PENDING_TRUE

0x0000341A VADC2_LC_BTM_2_INT_MID_SEL

Type: RW
Clock: pbus_wrclk
Reset State: 0x00
Reset Name: uvlo_perph_rb

Selects the MID that will receive the interrupt

VADC2_LC_BTM_2_INT_MID_SEL

Bits	Name	Description
1:0	INT_MID_SEL	Selects the MID that will receive the interrupt

0x0000341B VADC2_LC_BTM_2_INT_PRIORITY

Type: RW
Clock: pbus_wrclk
Reset State: 0x00
Reset Name: uvlo_perph_rb

Selects the SPMI interrupt priority

VADC2_LC_BTM_2_INT_PRIORITY

Bits	Name	Description
0	INT_PRIORITY	Selects the SPMI interrupt priority 0x0: SR 0x1: A

0x00003440 VADC2_LC_BTM_2_MODE_CTL

Type: RW
Clock: pbus_wrclk
Reset State: 0x03
Reset Name: uvlo_perph_rb

Settings Common to Input and Output

VADC2_LC_BTM_2_MODE_CTL

Bits	Name	Description
4:3	OP_MODE	Selects basic mode of operation: 00=Normal Mode - Single measurement 01=Conversion Sequencer - Single measurement using conversion sequencer 10=Measurement Interval - Single or Continuous measurements at specified delay/interval 0x0: NORM_MODE 0x1: CONV_SEQ_MODE 0x2: MEAS_INT_MODE

VADC2_LC_BTM_2_MODE_CTL (cont.)

Bits	Name	Description
2	VREF_XO_THM_FORCE	When cleared, VDD_REF is connected to XO thermistor in active mode, disconnected in sleep mode When set, force VDD_REF to be connected to the XO thermistor regardless the status of sleep 0x0: VREF_XO_THM_FORCE_FALSE 0x1: VREF_XO_THM_FORCE_TRUE
1	AMUX_TRIM_EN	Enable AMUX trim 0x0: AMUX_TRIM_DISABLED 0x1: AMUX_TRIM_ENABLED
0	ADC_TRIM_EN	Enable ADC trim 0x0: ADC_TRIM_DISABLED 0x1: ADC_TRIM_ENABLED

0x00003441 VADC2_LC_BTM_2_MULTI_MEAS_EN

Type: RW
Clock: pbus_wrclk
Reset State: 0x01
Reset Name: uvlo_perph_rb

Measurement enabled when bit is high

VADC2_LC_BTM_2_MULTI_MEAS_EN

Bits	Name	Description
7	M7_MEAS_EN	Enables measurement M7 in auto-sequence 0x0: M7_MEAS_DISABLE 0x1: M7_MEAS_ENABLE
6	M6_MEAS_EN	Enables measurement M6 in auto-sequence 0x0: M6_MEAS_DISABLE 0x1: M6_MEAS_ENABLE
5	M5_MEAS_EN	Enables measurement M5 in auto-sequence 0x0: M5_MEAS_DISABLE 0x1: M5_MEAS_ENABLE
4	M4_MEAS_EN	Enables measurement M4 in auto-sequence 0x0: M4_MEAS_DISABLE 0x1: M4_MEAS_ENABLE
3	M3_MEAS_EN	Enables measurement M3 in auto-sequence 0x0: M3_MEAS_DISABLE 0x1: M3_MEAS_ENABLE

VADC2_LC_BTM_2_MULTI_MEAS_EN (cont.)

Bits	Name	Description
2	M2_MEAS_EN	Enables measurement M2 in auto-sequence 0x0: M2_MEAS_DISABLE 0x1: M2_MEAS_ENABLE
1	M1_MEAS_EN	Enables measurement M1 in auto-sequence 0x0: M1_MEAS_DISABLE 0x1: M1_MEAS_ENABLE
0	M0_MEAS_EN	Enables measurement M0 in auto-sequence 0x0: M0_MEAS_DISABLE 0x1: M0_MEAS_ENABLE

0x00003442 VADC2_LC_BTM_2_LOW_THR_INT_EN

Type: RW
Clock: pbus_wrclk
Reset State: 0x01
Reset Name: uvlo_perph_rb

Measurement's low threshold is used to trigger threshold interrupt when bit is high

VADC2_LC_BTM_2_LOW_THR_INT_EN

Bits	Name	Description
7	M7_LOW_THR_INT_EN	Enables M7 low threshold for interrupt 0x0: M7_LOW_THR_INT_DISABLED 0x1: M7_LOW_THR_INT_ENABLED
6	M6_LOW_THR_INT_EN	Enables M6 low threshold for interrupt 0x0: M6_LOW_THR_INT_DISABLED 0x1: M6_LOW_THR_INT_ENABLED
5	M5_LOW_THR_INT_EN	Enables M5 low threshold for interrupt 0x0: M5_LOW_THR_INT_DISABLED 0x1: M5_LOW_THR_INT_ENABLED
4	M4_LOW_THR_INT_EN	Enables M4 low threshold for interrupt 0x0: M4_LOW_THR_INT_DISABLED 0x1: M4_LOW_THR_INT_ENABLED
3	M3_LOW_THR_INT_EN	Enables M3 low threshold for interrupt 0x0: M3_LOW_THR_INT_DISABLED 0x1: M3_LOW_THR_INT_ENABLED
2	M2_LOW_THR_INT_EN	Enables M2 low threshold for interrupt 0x0: M2_LOW_THR_INT_DISABLED 0x1: M2_LOW_THR_INT_ENABLED

VADC2_LC_BTM_2_LOW_THR_INT_EN (cont.)

Bits	Name	Description
1	M1_LOW_THR_INT_EN	Enables M1 low threshold for interrupt 0x0: M1_LOW_THR_INT_DISABLED 0x1: M1_LOW_THR_INT_ENABLED
0	M0_LOW_THR_INT_EN	Enables M0 low threshold for interrupt 0x0: M0_LOW_THR_INT_DISABLED 0x1: M0_LOW_THR_INT_ENABLED

0x00003443 VADC2_LC_BTM_2_HIGH_THR_INT_EN

Type: RW
Clock: pbus_wrclk
Reset State: 0x01
Reset Name: uvlo_perph_rb

Measurement's high threshold is used to trigger threshold interrupt when bit is high,,,,'

VADC2_LC_BTM_2_HIGH_THR_INT_EN

Bits	Name	Description
7	M7_HIGH_THR_INT_EN	Enables M7 high threshold for interrupt 0x0: M7_HIGH_THR_INT_DISABLED 0x1: M7_HIGH_THR_INT_ENABLED
6	M6_HIGH_THR_INT_EN	Enables M6 high threshold for interrupt 0x0: M6_HIGH_THR_INT_DISABLED 0x1: M6_HIGH_THR_INT_ENABLED
5	M5_HIGH_THR_INT_EN	Enables M5 high threshold for interrupt 0x0: M5_HIGH_THR_INT_DISABLED 0x1: M5_HIGH_THR_INT_ENABLED
4	M4_HIGH_THR_INT_EN	Enables M4 high threshold for interrupt 0x0: M4_HIGH_THR_INT_DISABLED 0x1: M4_HIGH_THR_INT_ENABLED
3	M3_HIGH_THR_INT_EN	Enables M3 high threshold for interrupt 0x0: M3_HIGH_THR_INT_DISABLED 0x1: M3_HIGH_THR_INT_ENABLED
2	M2_HIGH_THR_INT_EN	Enables M2 high threshold for interrupt 0x0: M2_HIGH_THR_INT_DISABLED 0x1: M2_HIGH_THR_INT_ENABLED
1	M1_HIGH_THR_INT_EN	Enables M1 high threshold for interrupt 0x0: M1_HIGH_THR_INT_DISABLED 0x1: M1_HIGH_THR_INT_ENABLED

VADC2_LC_BTM_2_HIGH_THR_INT_EN (cont.)

Bits	Name	Description
0	M0_HIGH_THR_INT_EN	Enables M0 high threshold for interrupt 0x0: M0_HIGH_THR_INT_DISABLED 0x1: M0_HIGH_THR_INT_ENABLED

0x00003446 VADC2_LC_BTM_2_EN_CTL1

Type: RW
Clock: pbus_wrclk
Reset State: 0x00
Reset Name: uvlo_perph_rb

Enables ADC module.

VADC2_LC_BTM_2_EN_CTL1

Bits	Name	Description
7	ADC_EN	Enables ADC module. 0x0: ADC_DISABLED 0x1: ADC_ENABLED

0x00003448 VADC2_LC_BTM_2_M0_ADC_CH_SEL_CTL

Type: RW
Clock: pbus_wrclk
Reset State: 0xFF
Reset Name: uvlo_perph_rb

M0 ADC Channel selection.

VADC2_LC_BTM_2_M0_ADC_CH_SEL_CTL

Bits	Name	Description
7:0	ADC_CH_SEL	M0 ADC Channel selection.

0x00003450 VADC2_LC_BTM_2_ADC_DIG_PARAM

Type: RW
Clock: pbus_wrclk
Reset State: 0x04
Reset Name: uvlo_perph_rb

ADC Digital Parameters

VADC2_LC_BTM_2_ADC_DIG_PARAM

Bits	Name	Description
3:2	DEC_RATIO_SEL	Decimation ratio: 0x0: DECI_512 0x1: DECI_1K 0x2: DECI_2K 0x3: DECI_4K
1:0	CLK_SEL	Select ADC clock rate: 0x0: CLK_SEL_2P4MHZ 0x1: CLK_SEL_4P8MHZ 0x2: CLK_SEL_9P6MHZ 0x3: CLK_SEL_19P2MHZ

0x00003451 VADC2_LC_BTM_2_HW_SETTLE_DELAY

Type: RW
Clock: pbus_wrclk
Reset State: 0x00
Reset Name: uvlo_perph_rb

Settle Delay

VADC2_LC_BTM_2_HW_SETTLE_DELAY

Bits	Name	Description
3:0	HW_SETTLE_DELAY	Time between AMUX getting configured and the ADC starting conversion. Delay = 100us*(value) for value<11, and 2ms*(value-10) otherwise 0x0: HW_SETTLE_DELAY_0US 0x1: HW_SETTLE_DELAY_100US 0x2: HW_SETTLE_DELAY_200US 0x3: HW_SETTLE_DELAY_300US 0x4: HW_SETTLE_DELAY_400US 0x5: HW_SETTLE_DELAY_500US 0x6: HW_SETTLE_DELAY_600US 0x7: HW_SETTLE_DELAY_700US 0x8: HW_SETTLE_DELAY_800US 0x9: HW_SETTLE_DELAY_900US 0xA: HW_SETTLE_DELAY_1MS 0xB: HW_SETTLE_DELAY_2MS 0xC: HW_SETTLE_DELAY_4MS 0xD: HW_SETTLE_DELAY_6MS 0xE: HW_SETTLE_DELAY_8MS 0xF: HW_SETTLE_DELAY_10MS

0x00003452 VADC2_LC_BTM_2_CONV_REQ

Type: W
Clock: pbus_wrclk
Reset State: 0x00
Reset Name: req_rb

Conversion Request

VADC2_LC_BTM_2_CONV_REQ

Bits	Name	Description
7	REQ	Conversion request strobe. When bit is asserted the arbiter stores a descriptor in the conversion request queue. Bit is cleared when ADC conversion is completed. 0x0: CONV_REQ_FALSE 0x1: CONV_REQ_TRUE

0x00003454 VADC2_LC_BTM_2_CONV_SEQ_CTL

Type: RW
Clock: pbus_wrclk
Reset State: 0x45
Reset Name: uvlo_perph_rb

Conversion Sequencer Control

VADC2_LC_BTM_2_CONV_SEQ_CTL

Bits	Name	Description
7:4	CONV_SEQ_HOLDOFF	Select delay from conversion trigger signal (i.e. adc_conv_seq_trig) transition to ADC enable. Delay = 25us*(value+1). Actual delay will be longer if request is stored in a non empty FIFO and/or conversion needs to wait for LDO OK handshake. 0x0: SEQ_HOLD_25US 0x1: SEQ_HOLD_50US 0x2: SEQ_HOLD_75US 0x3: SEQ_HOLD_100US 0x4: SEQ_HOLD_125US 0x5: SEQ_HOLD_150US 0x6: SEQ_HOLD_175US 0x7: SEQ_HOLD_200US 0x8: SEQ_HOLD_225US 0x9: SEQ_HOLD_250US 0xA: SEQ_HOLD_275US 0xB: SEQ_HOLD_300US 0xC: SEQ_HOLD_325US 0xD: SEQ_HOLD_350US 0xE: SEQ_HOLD_375US 0xF: SEQ_HOLD_400US
3:0	CONV_SEQ_TIMEOUT	Select delay (0 to 15ms) from conversion request to triggering conversion sequencer hold off timer. 0x0: SEQ_TIMEOUT_0MS 0x1: SEQ_TIMEOUT_1MS 0x2: SEQ_TIMEOUT_2MS 0x3: SEQ_TIMEOUT_3MS 0x4: SEQ_TIMEOUT_4MS 0x5: SEQ_TIMEOUT_5MS 0x6: SEQ_TIMEOUT_6MS 0x7: SEQ_TIMEOUT_7MS 0x8: SEQ_TIMEOUT_8MS 0x9: SEQ_TIMEOUT_9MS 0xA: SEQ_TIMEOUT_10MS 0xB: SEQ_TIMEOUT_11MS 0xC: SEQ_TIMEOUT_12MS 0xD: SEQ_TIMEOUT_13MS 0xE: SEQ_TIMEOUT_14MS 0xF: SEQ_TIMEOUT_15MS

0x00003455 VADC2_LC_BTM_2_CONV_SEQ_TRIG_CTL

Type: RW
Clock: pbus_wrclk
Reset State: 0x00
Reset Name: uvlo_perph_rb

Conversion Sequencer Trigger Select

VADC2_LC_BTM_2_CONV_SEQ_TRIG_CTL

Bits	Name	Description
7	CONV_SEQ_TRIG_COND	Select conversion trigger condition(s) that starts ADC conversion hold off timer. 0x0: FALLING_EDGE 0x1: RISING_EDGE
1:0	CONV_SEQ_TRIG_SEL	Select conversion sequencer trigger input signal. 0x0: ADC_TRIG0 0x1: ADC_TRIG1 0x2: ADC_TRIG2 0x3: ADC_TRIG3

0x00003457 VADC2_LC_BTM_2_MEAS_INTERVAL_CTL

Type: RW
Clock: pbus_wrclk
Reset State: 0x00
Reset Name: uvlo_perph_rb

Interval Mode Control

VADC2_LC_BTM_2_MEAS_INTERVAL_CTL

Bits	Name	Description
3:0	MEAS_INTERVAL_TIME1	Select measurement interval time (i.e., If value=0, use 0ms, else use 2^(value+4)/32768). 0x0: MEAS_INTERVAL1_0MS 0x1: MEAS_INTERVAL1_1P0MS 0x2: MEAS_INTERVAL1_2P0MS 0x3: MEAS_INTERVAL1_3P9MS 0x4: MEAS_INTERVAL1_7P8MS 0x5: MEAS_INTERVAL1_15P6MS 0x6: MEAS_INTERVAL1_31P3MS 0x7: MEAS_INTERVAL1_62P5MS 0x8: MEAS_INTERVAL1_125MS 0x9: MEAS_INTERVAL1_250MS 0xA: MEAS_INTERVAL1_500MS 0xB: MEAS_INTERVAL1_1S 0xC: MEAS_INTERVAL1_2S 0xD: MEAS_INTERVAL1_4S 0xE: MEAS_INTERVAL1_8S 0xF: MEAS_INTERVAL1_16S

0x00003458 VADC2_LC_BTM_2_MEAS_INTERVAL_CTL2

Type: RW
Clock: pbus_wrclk
Reset State: 0x00
Reset Name: uvlo_perph_rb

VADC2_LC_BTM_2_MEAS_INTERVAL_CTL2

Bits	Name	Description
7:4	MEAS_INTERVAL_TIME2	Small timer: Select measurement interval time in 100ms increments. 0x0: MEAS_INTERVAL2_0MS 0x1: MEAS_INTERVAL2_100MS 0x2: MEAS_INTERVAL2_200MS 0x3: MEAS_INTERVAL2_300MS 0x4: MEAS_INTERVAL2_400MS 0x5: MEAS_INTERVAL2_500MS 0x6: MEAS_INTERVAL2_600MS 0x7: MEAS_INTERVAL2_700MS 0x8: MEAS_INTERVAL2_800MS 0x9: MEAS_INTERVAL2_900MS 0xA: MEAS_INTERVAL2_1000MS 0xB: MEAS_INTERVAL2_1100MS 0xC: MEAS_INTERVAL2_1200MS 0xD: MEAS_INTERVAL2_1300MS 0xE: MEAS_INTERVAL2_1400MS 0xF: MEAS_INTERVAL2_1500MS
3:0	MEAS_INTERVAL_TIME3	Large timer: Select measurement interval time in seconds. 0x0: MEAS_INTERVAL3_0S 0x1: MEAS_INTERVAL3_1S 0x2: MEAS_INTERVAL3_2S 0x3: MEAS_INTERVAL3_3S 0x4: MEAS_INTERVAL3_4S 0x5: MEAS_INTERVAL3_5S 0x6: MEAS_INTERVAL3_6S 0x7: MEAS_INTERVAL3_7S 0x8: MEAS_INTERVAL3_8S 0x9: MEAS_INTERVAL3_9S 0xA: MEAS_INTERVAL3_10S 0xB: MEAS_INTERVAL3_11S 0xC: MEAS_INTERVAL3_12S 0xD: MEAS_INTERVAL3_13S 0xE: MEAS_INTERVAL3_14S 0xF: MEAS_INTERVAL3_15S

0x00003459 VADC2_LC_BTM_2_MEAS_INTERVAL_OP_CTL

Type: RW
Clock: pbus_wrclk
Reset State: 0x00
Reset Name: uvlo_perph_rb

Interval mode select

VADC2_LC_BTM_2_MEAS_INTERVAL_OP_CTL

Bits	Name	Description
7	MEAS_INTERVAL_OP	Interval mode select 0x0: INTERVAL_MODE_DISABLED 0x1: INTERVAL_MODE_ENABLED
1:0	M0_MEAS_INTERVAL_TIME	Select which interval timer to use 0x0: M0_USING_TIMER1 0x0: M0_USING_TIMER1 0x1: M0_USING_TIMER2 0x1: M0_USING_TIMER2 0x2: M0_USING_TIMER3 0x2: M0_USING_TIMER3

0x0000345A VADC2_LC_BTM_2_FAST_AVG_CTL

Type: RW
Clock: pbus_wrclk
Reset State: 0x00
Reset Name: uvlo_perph_rb

Fast Average Control

VADC2_LC_BTM_2_FAST_AVG_CTL

Bits	Name	Description
3:0	FAST_AVG_SAMPLES	Select number of samples for use in fast average mode (i.e. 2^(value). 0x0: AVG_1_SAMPLE 0x1: AVG_2_SAMPLES 0x2: AVG_4_SAMPLES 0x3: AVG_8_SAMPLES 0x4: AVG_16_SAMPLES 0x5: AVG_32_SAMPLES 0x6: AVG_64_SAMPLES 0x7: AVG_128_SAMPLES 0x8: AVG_256_SAMPLES 0x9: AVG_512_SAMPLES

0x0000345B VADC2_LC_BTM_2_FAST_AVG_EN

Type: RW
Clock: pbus_wrclk
Reset State: 0x00
Reset Name: uvlo_perph_rb

Fast Average Enable

VADC2_LC_BTM_2_FAST_AVG_EN

Bits	Name	Description
7	FAST_AVG_EN	Select low latency for multiple conversions 0x0: FAST_AVG_DISABLED 0x1: FAST_AVG_ENABLED

0x0000345C VADC2_LC_BTM_2_M0_LOW_THR0

Type: RW
Clock: pbus_wrclk
Reset State: 0x00
Reset Name: uvlo_perph_rb

M0 Low Threshold Byte 0

VADC2_LC_BTM_2_M0_LOW_THR0

Bits	Name	Description
7:0	LOW_THR_7_0	M0 Low byte of low threshold detector

0x0000345D VADC2_LC_BTM_2_M0_LOW_THR1

Type: RW
Clock: pbus_wrclk
Reset State: 0x00
Reset Name: uvlo_perph_rb

M0 Low Threshold Byte 1

VADC2_LC_BTM_2_M0_LOW_THR1

Bits	Name	Description
7:0	LOW_THR_15_8	M0 High byte of low threshold detector

0x0000345E VADC2_LC_BTM_2_M0_HIGH_THR0

Type: RW
Clock: pbus_wrclk
Reset State: 0xFF
Reset Name: uvlo_perph_rb

M0 High Threshold Byte 0

VADC2_LC_BTM_2_M0_HIGH_THR0

Bits	Name	Description
7:0	HIGH_THR_7_0	M0 Low byte of high threshold detector

0x0000345F VADC2_LC_BTM_2_M0_HIGH_THR1

Type: RW
Clock: pbus_wrclk
Reset State: 0xFF
Reset Name: uvlo_perph_rb

M0 High Threshold Byte 1

VADC2_LC_BTM_2_M0_HIGH_THR1

Bits	Name	Description
7:0	HIGH_THR_15_8	M0 High byte of high threshold detector

0x00003460 VADC2_LC_BTM_2_M0_DATA0

Type: R
Clock: pbus_wrclk
Reset State: 0x00
Reset Name: N/A

M0 ADC Sample Byte 0

VADC2_LC_BTM_2_M0_DATA0

Bits	Name	Description
7:0	DATA_7_0	M0 Low byte of ADC output

0x00003461 VADC2_LC_BTM_2_M0_DATA1

Type: R
Clock: pbus_wrclk
Reset State: 0x00
Reset Name: N/A

M0 ADC Sample Byte 1

VADC2_LC_BTM_2_M0_DATA1

Bits	Name	Description
7:0	DATA_15_8	M0 High byte of ADC output

0x00003468 VADC2_LC_BTM_2_M1_ADC_CH_SEL_CTL

Type: RW
Clock: pbus_wrclk
Reset State: 0x00
Reset Name: uvlo_perph_rb

M1 ADC Channel selection.

VADC2_LC_BTM_2_M1_ADC_CH_SEL_CTL

Bits	Name	Description
7:0	ADC_CH_SEL	M1 ADC Channel selection.

0x00003469 VADC2_LC_BTM_2_M1_LOW_THR0

Type: RW
Clock: pbus_wrclk
Reset State: 0x00
Reset Name: uvlo_perph_rb

M1 Low Threshold Byte 0

VADC2_LC_BTM_2_M1_LOW_THR0

Bits	Name	Description
7:0	LOW_THR_7_0	M1 Low byte of low threshold detector

0x0000346A VADC2_LC_BTM_2_M1_LOW_THR1

Type: RW
Clock: pbus_wrclk
Reset State: 0x00
Reset Name: uvlo_perph_rb

M1 Low Threshold Byte 1

VADC2_LC_BTM_2_M1_LOW_THR1

Bits	Name	Description
7:0	LOW_THR_15_8	M1 High byte of low threshold detector

0x0000346B VADC2_LC_BTM_2_M1_HIGH_THR0

Type: RW
Clock: pbus_wrclk
Reset State: 0xFF
Reset Name: uvlo_perph_rb

M1 High Threshold Byte 0

VADC2_LC_BTM_2_M1_HIGH_THR0

Bits	Name	Description
7:0	HIGH_THR_7_0	M1 Low byte of high threshold detector

0x0000346C VADC2_LC_BTM_2_M1_HIGH_THR1

Type: RW
Clock: pbus_wrclk
Reset State: 0xFF
Reset Name: uvlo_perph_rb

M1 High Threshold Byte 1

VADC2_LC_BTM_2_M1_HIGH_THR1

Bits	Name	Description
7:0	HIGH_THR_15_8	M1 High byte of high threshold detector

0x0000346D VADC2_LC_BTM_2_M1_MEAS_INTERVAL_CTL

Type: RW
Clock: pbus_wrclk
Reset State: 0x00
Reset Name: uvlo_perph_rb

VADC2_LC_BTM_2_M1_MEAS_INTERVAL_CTL

Bits	Name	Description
1:0	M1_MEAS_INTERVAL_TIME	M1 Select which interval timer to use 0x0: M1_USING_TIMER1 0x1: M1_USING_TIMER2 0x2: M1_USING_TIMER3

0x00003470 VADC2_LC_BTM_2_M2_ADC_CH_SEL_CTL

Type: RW
Clock: pbus_wrclk
Reset State: 0x00
Reset Name: uvlo_perph_rb

M2 ADC Channel selection.

VADC2_LC_BTM_2_M2_ADC_CH_SEL_CTL

Bits	Name	Description
7:0	ADC_CH_SEL	M2 ADC Channel selection.

0x00003471 VADC2_LC_BTM_2_M2_LOW_THR0

Type: RW
Clock: pbus_wrclk
Reset State: 0x00
Reset Name: uvlo_perph_rb

M2 Low Threshold Byte 0

VADC2_LC_BTM_2_M2_LOW_THR0

Bits	Name	Description
7:0	LOW_THR_7_0	M2 Low byte of low threshold detector

0x00003472 VADC2_LC_BTM_2_M2_LOW_THR1

Type: RW
Clock: pbus_wrclk
Reset State: 0x00
Reset Name: uvlo_perph_rb

M2 Low Threshold Byte 1

VADC2_LC_BTM_2_M2_LOW_THR1

Bits	Name	Description
7:0	LOW_THR_15_8	M2 High byte of low threshold detector

0x00003473 VADC2_LC_BTM_2_M2_HIGH_THR0

Type: RW
Clock: pbus_wrclk
Reset State: 0xFF
Reset Name: uvlo_perph_rb

M2 High Threshold Byte 0

VADC2_LC_BTM_2_M2_HIGH_THR0

Bits	Name	Description
7:0	HIGH_THR_7_0	M2 Low byte of high threshold detector

0x00003474 VADC2_LC_BTM_2_M2_HIGH_THR1

Type: RW
Clock: pbus_wrclk
Reset State: 0xFF
Reset Name: uvlo_perph_rb

M2 High Threshold Byte 1

VADC2_LC_BTM_2_M2_HIGH_THR1

Bits	Name	Description
7:0	HIGH_THR_15_8	M2 High byte of high threshold detector

0x00003475 VADC2_LC_BTM_2_M2_MEAS_INTERVAL_CTL

Type: RW
Clock: pbus_wrclk
Reset State: 0x00
Reset Name: uvlo_perph_rb

VADC2_LC_BTM_2_M2_MEAS_INTERVAL_CTL

Bits	Name	Description
1:0	M2_MEAS_INTERVAL_TIME	M2 Select which interval timer to use 0x0: M2_USING_TIMER1 0x1: M2_USING_TIMER2 0x2: M2_USING_TIMER3

0x00003478 VADC2_LC_BTM_2_M3_ADC_CH_SEL_CTL

Type: RW
Clock: pbus_wrclk
Reset State: 0x00
Reset Name: uvlo_perph_rb

M3 ADC Channel selection.

VADC2_LC_BTM_2_M3_ADC_CH_SEL_CTL

Bits	Name	Description
7:0	ADC_CH_SEL	M3 ADC Channel selection.

0x00003479 VADC2_LC_BTM_2_M3_LOW_THR0

Type: RW
Clock: pbus_wrclk
Reset State: 0x00
Reset Name: uvlo_perph_rb

M3 Low Threshold Byte 0

VADC2_LC_BTM_2_M3_LOW_THR0

Bits	Name	Description
7:0	LOW_THR_7_0	M3 Low byte of low threshold detector

0x0000347A VADC2_LC_BTM_2_M3_LOW_THR1

Type: RW
Clock: pbus_wrclk
Reset State: 0x00
Reset Name: uvlo_perph_rb

M3 Low Threshold Byte 1

VADC2_LC_BTM_2_M3_LOW_THR1

Bits	Name	Description
7:0	LOW_THR_15_8	M3 High byte of low threshold detector

0x0000347B VADC2_LC_BTM_2_M3_HIGH_THR0

Type: RW
Clock: pbus_wrclk
Reset State: 0xFF
Reset Name: uvlo_perph_rb

M3 High Threshold Byte 0

VADC2_LC_BTM_2_M3_HIGH_THR0

Bits	Name	Description
7:0	HIGH_THR_7_0	M3 Low byte of high threshold detector

0x0000347C VADC2_LC_BTM_2_M3_HIGH_THR1

Type: RW
Clock: pbus_wrclk
Reset State: 0xFF
Reset Name: uvlo_perph_rb

M3 High Threshold Byte 1

VADC2_LC_BTM_2_M3_HIGH_THR1

Bits	Name	Description
7:0	HIGH_THR_15_8	M3 High byte of high threshold detector

0x0000347D VADC2_LC_BTM_2_M3_MEAS_INTERVAL_CTL

Type: RW
Clock: pbus_wrclk
Reset State: 0x00
Reset Name: uvlo_perph_rb

VADC2_LC_BTM_2_M3_MEAS_INTERVAL_CTL

Bits	Name	Description
1:0	M3_MEAS_INTERVAL_TIME	M3 Select which interval timer to use 0x0: M3_USING_TIMER1 0x1: M3_USING_TIMER2 0x2: M3_USING_TIMER3

0x00003480 VADC2_LC_BTM_2_M4_ADC_CH_SEL_CTL

Type: RW
Clock: pbus_wrclk
Reset State: 0x00
Reset Name: uvlo_perph_rb

M4 ADC Channel selection.

VADC2_LC_BTM_2_M4_ADC_CH_SEL_CTL

Bits	Name	Description
7:0	ADC_CH_SEL	M4 ADC Channel selection.

0x00003481 VADC2_LC_BTM_2_M4_LOW_THR0

Type: RW
Clock: pbus_wrclk
Reset State: 0x00
Reset Name: uvlo_perph_rb

M4 Low Threshold Byte 0

VADC2_LC_BTM_2_M4_LOW_THR0

Bits	Name	Description
7:0	LOW_THR_7_0	M4 Low byte of low threshold detector

0x00003482 VADC2_LC_BTM_2_M4_LOW_THR1

Type: RW
Clock: pbus_wrclk
Reset State: 0x00
Reset Name: uvlo_perph_rb

M4 Low Threshold Byte 1

VADC2_LC_BTM_2_M4_LOW_THR1

Bits	Name	Description
7:0	LOW_THR_15_8	M4 High byte of low threshold detector

0x00003483 VADC2_LC_BTM_2_M4_HIGH_THR0

Type: RW
Clock: pbus_wrclk
Reset State: 0xFF
Reset Name: uvlo_perph_rb

M4 High Threshold Byte 0

VADC2_LC_BTM_2_M4_HIGH_THR0

Bits	Name	Description
7:0	HIGH_THR_7_0	M4 Low byte of high threshold detector

0x00003484 VADC2_LC_BTM_2_M4_HIGH_THR1

Type: RW
Clock: pbus_wrclk
Reset State: 0xFF
Reset Name: uvlo_perph_rb

M4 High Threshold Byte 1

VADC2_LC_BTM_2_M4_HIGH_THR1

Bits	Name	Description
7:0	HIGH_THR_15_8	M4 High byte of high threshold detector

0x00003485 VADC2_LC_BTM_2_M4_MEAS_INTERVAL_CTL

Type: RW
Clock: pbus_wrclk
Reset State: 0x00
Reset Name: uvlo_perph_rb

VADC2_LC_BTM_2_M4_MEAS_INTERVAL_CTL

Bits	Name	Description
1:0	M4_MEAS_INTERVAL_TIME	M4 Select which interval timer to use 0x0: M4_USING_TIMER1 0x1: M4_USING_TIMER2 0x2: M4_USING_TIMER3

0x00003488 VADC2_LC_BTM_2_M5_ADC_CH_SEL_CTL

Type: RW
Clock: pbus_wrclk
Reset State: 0x00
Reset Name: uvlo_perph_rb

M5 ADC Channel selection.

VADC2_LC_BTM_2_M5_ADC_CH_SEL_CTL

Bits	Name	Description
7:0	ADC_CH_SEL	M5 ADC Channel selection.

0x00003489 VADC2_LC_BTM_2_M5_LOW_THR0

Type: RW
Clock: pbus_wrclk
Reset State: 0x00
Reset Name: uvlo_perph_rb

M5 Low Threshold Byte 0

VADC2_LC_BTM_2_M5_LOW_THR0

Bits	Name	Description
7:0	LOW_THR_7_0	M5 Low byte of low threshold detector

0x0000348A VADC2_LC_BTM_2_M5_LOW_THR1

Type: RW
Clock: pbus_wrclk
Reset State: 0x00
Reset Name: uvlo_perph_rb

M5 Low Threshold Byte 1

VADC2_LC_BTM_2_M5_LOW_THR1

Bits	Name	Description
7:0	LOW_THR_15_8	M5 High byte of low threshold detector

0x0000348B VADC2_LC_BTM_2_M5_HIGH_THR0

Type: RW
Clock: pbus_wrclk
Reset State: 0xFF
Reset Name: uvlo_perph_rb

M5 High Threshold Byte 0

VADC2_LC_BTM_2_M5_HIGH_THR0

Bits	Name	Description
7:0	HIGH_THR_7_0	M5 Low byte of high threshold detector

0x0000348C VADC2_LC_BTM_2_M5_HIGH_THR1

Type: RW
Clock: pbus_wrclk
Reset State: 0xFF
Reset Name: uvlo_perph_rb

M5 High Threshold Byte 1

VADC2_LC_BTM_2_M5_HIGH_THR1

Bits	Name	Description
7:0	HIGH_THR_15_8	M5 High byte of high threshold detector

0x0000348D VADC2_LC_BTM_2_M5_MEAS_INTERVAL_CTL

Type: RW
Clock: pbus_wrclk
Reset State: 0x00
Reset Name: uvlo_perph_rb

VADC2_LC_BTM_2_M5_MEAS_INTERVAL_CTL

Bits	Name	Description
1:0	M5_MEAS_INTERVAL_TIME	M5 Select which interval timer to use 0x0: M5_USING_TIMER1 0x1: M5_USING_TIMER2 0x2: M5_USING_TIMER3

0x00003490 VADC2_LC_BTM_2_M6_ADC_CH_SEL_CTL

Type: RW
Clock: pbus_wrclk
Reset State: 0x00
Reset Name: uvlo_perph_rb

M6 ADC Channel selection.

VADC2_LC_BTM_2_M6_ADC_CH_SEL_CTL

Bits	Name	Description
7:0	ADC_CH_SEL	M6 ADC Channel selection.

0x00003491 VADC2_LC_BTM_2_M6_LOW_THR0

Type: RW
Clock: pbus_wrclk
Reset State: 0x00
Reset Name: uvlo_perph_rb

M6 Low Threshold Byte 0

VADC2_LC_BTM_2_M6_LOW_THR0

Bits	Name	Description
7:0	LOW_THR_7_0	M6 Low byte of low threshold detector

0x00003492 VADC2_LC_BTM_2_M6_LOW_THR1

Type: RW
Clock: pbus_wrclk
Reset State: 0x00
Reset Name: uvlo_perph_rb

M6 Low Threshold Byte 1

VADC2_LC_BTM_2_M6_LOW_THR1

Bits	Name	Description
7:0	LOW_THR_15_8	M6 High byte of low threshold detector

0x00003493 VADC2_LC_BTM_2_M6_HIGH_THR0

Type: RW
Clock: pbus_wrclk
Reset State: 0xFF
Reset Name: uvlo_perph_rb

M6 High Threshold Byte 0

VADC2_LC_BTM_2_M6_HIGH_THR0

Bits	Name	Description
7:0	HIGH_THR_7_0	M6 Low byte of high threshold detector

0x00003494 VADC2_LC_BTM_2_M6_HIGH_THR1

Type: RW
Clock: pbus_wrclk
Reset State: 0xFF
Reset Name: uvlo_perph_rb

M6 High Threshold Byte 1

VADC2_LC_BTM_2_M6_HIGH_THR1

Bits	Name	Description
7:0	HIGH_THR_15_8	M6 High byte of high threshold detector

0x00003495 VADC2_LC_BTM_2_M6_MEAS_INTERVAL_CTL

Type: RW
Clock: pbus_wrclk
Reset State: 0x00
Reset Name: uvlo_perph_rb

VADC2_LC_BTM_2_M6_MEAS_INTERVAL_CTL

Bits	Name	Description
1:0	M6_MEAS_INTERVAL_TIME	M6 Select which interval timer to use 0x0: M6_USING_TIMER1 0x1: M6_USING_TIMER2 0x2: M6_USING_TIMER3

0x00003498 VADC2_LC_BTM_2_M7_ADC_CH_SEL_CTL

Type: RW
Clock: pbus_wrclk
Reset State: 0x00
Reset Name: uvlo_perph_rb

M7 ADC Channel selection.

VADC2_LC_BTM_2_M7_ADC_CH_SEL_CTL

Bits	Name	Description
7:0	ADC_CH_SEL	M7 ADC Channel selection.

0x00003499 VADC2_LC_BTM_2_M7_LOW_THR0

Type: RW
Clock: pbus_wrclk
Reset State: 0x00
Reset Name: uvlo_perph_rb

M7 Low Threshold Byte 0

VADC2_LC_BTM_2_M7_LOW_THR0

Bits	Name	Description
7:0	LOW_THR_7_0	M7 Low byte of low threshold detector

0x0000349A VADC2_LC_BTM_2_M7_LOW_THR1

Type: RW
Clock: pbus_wrclk
Reset State: 0x00
Reset Name: uvlo_perph_rb

M7 Low Threshold Byte 1

VADC2_LC_BTM_2_M7_LOW_THR1

Bits	Name	Description
7:0	LOW_THR_15_8	M7 High byte of low threshold detector

0x0000349B VADC2_LC_BTM_2_M7_HIGH_THR0

Type: RW
Clock: pbus_wrclk
Reset State: 0xFF
Reset Name: uvlo_perph_rb

M7 High Threshold Byte 0

VADC2_LC_BTM_2_M7_HIGH_THR0

Bits	Name	Description
7:0	HIGH_THR_7_0	M7 Low byte of high threshold detector

0x0000349C VADC2_LC_BTM_2_M7_HIGH_THR1

Type: RW
Clock: pbus_wrclk
Reset State: 0xFF
Reset Name: uvlo_perph_rb

M7 High Threshold Byte 1

VADC2_LC_BTM_2_M7_HIGH_THR1

Bits	Name	Description
7:0	HIGH_THR_15_8	M7 High byte of high threshold detector

0x0000349D VADC2_LC_BTM_2_M7_MEAS_INTERVAL_CTL

Type: RW
Clock: pbus_wrclk
Reset State: 0x00
Reset Name: uvlo_perph_rb

VADC2_LC_BTM_2_M7_MEAS_INTERVAL_CTL

Bits	Name	Description
1:0	M7_MEAS_INTERVAL_TIME	M7 Select which interval timer to use 0x0: M7_USING_TIMER1 0x1: M7_USING_TIMER2 0x2: M7_USING_TIMER3

0x000034A0 VADC2_LC_BTM_2_M1_DATA0

Type: R
Clock: pbus_wrclk
Reset State: 0x00
Reset Name: N/A

M1 ADC Sample Byte 0

VADC2_LC_BTM_2_M1_DATA0

Bits	Name	Description
7:0	DATA_7_0	M1 Low byte of ADC output

0x000034A1 VADC2_LC_BTM_2_M1_DATA1

Type: R
Clock: pbus_wrclk
Reset State: 0x00
Reset Name: N/A

M1 ADC Sample Byte 1

VADC2_LC_BTM_2_M1_DATA1

Bits	Name	Description
7:0	DATA_15_8	M1 High byte of ADC output

0x000034A2 VADC2_LC_BTM_2_M2_DATA0

Type: R
Clock: pbus_wrclk
Reset State: 0x00
Reset Name: N/A

M2 ADC Sample Byte 0

VADC2_LC_BTM_2_M2_DATA0

Bits	Name	Description
7:0	DATA_7_0	M2 Low byte of ADC output

0x000034A3 VADC2_LC_BTM_2_M2_DATA1

Type: R
Clock: pbus_wrclk
Reset State: 0x00
Reset Name: N/A

M2 ADC Sample Byte 1

VADC2_LC_BTM_2_M2_DATA1

Bits	Name	Description
7:0	DATA_15_8	M2 High byte of ADC output

0x000034A4 VADC2_LC_BTM_2_M3_DATA0

Type: R
Clock: pbus_wrclk
Reset State: 0x00
Reset Name: N/A

M3 ADC Sample Byte 0

VADC2_LC_BTM_2_M3_DATA0

Bits	Name	Description
7:0	DATA_7_0	M3 Low byte of ADC output

0x000034A5 VADC2_LC_BTM_2_M3_DATA1

Type: R
Clock: pbus_wrclk
Reset State: 0x00
Reset Name: N/A

M3 ADC Sample Byte 1

VADC2_LC_BTM_2_M3_DATA1

Bits	Name	Description
7:0	DATA_15_8	M3 High byte of ADC output

0x000034A6 VADC2_LC_BTM_2_M4_DATA0

Type: R
Clock: pbus_wrclk
Reset State: 0x00
Reset Name: N/A

M4 ADC Sample Byte 0

VADC2_LC_BTM_2_M4_DATA0

Bits	Name	Description
7:0	DATA_7_0	M4 Low byte of ADC output

0x000034A7 VADC2_LC_BTM_2_M4_DATA1

Type: R
Clock: pbus_wrclk
Reset State: 0x00
Reset Name: N/A

M4 ADC Sample Byte 1

VADC2_LC_BTM_2_M4_DATA1

Bits	Name	Description
7:0	DATA_15_8	M4 High byte of ADC output

0x000034A8 VADC2_LC_BTM_2_M5_DATA0

Type: R
Clock: pbus_wrclk
Reset State: 0x00
Reset Name: N/A

M5 ADC Sample Byte 0

VADC2_LC_BTM_2_M5_DATA0

Bits	Name	Description
7:0	DATA_7_0	M5 Low byte of ADC output

0x000034A9 VADC2_LC_BTM_2_M5_DATA1

Type: R
Clock: pbus_wrclk
Reset State: 0x00
Reset Name: N/A

M5 ADC Sample Byte 1

VADC2_LC_BTM_2_M5_DATA1

Bits	Name	Description
7:0	DATA_15_8	M5 High byte of ADC output

0x000034AA VADC2_LC_BTM_2_M6_DATA0

Type: R
Clock: pbus_wrclk
Reset State: 0x00
Reset Name: N/A

M6 ADC Sample Byte 0

VADC2_LC_BTM_2_M6_DATA0

Bits	Name	Description
7:0	DATA_7_0	M6 Low byte of ADC output

0x000034AB VADC2_LC_BTM_2_M6_DATA1

Type: R
Clock: pbus_wrclk
Reset State: 0x00
Reset Name: N/A

M6 ADC Sample Byte 1

VADC2_LC_BTM_2_M6_DATA1

Bits	Name	Description
7:0	DATA_15_8	M6 High byte of ADC output

0x000034AC VADC2_LC_BTM_2_M7_DATA0

Type: R
Clock: pbus_wrclk
Reset State: 0x00
Reset Name: N/A

M7 ADC Sample Byte 0

VADC2_LC_BTM_2_M7_DATA0

Bits	Name	Description
7:0	DATA_7_0	M7 Low byte of ADC output

0x000034AD VADC2_LC_BTM_2_M7_DATA1

Type: R
Clock: pbus_wrclk
Reset State: 0x00
Reset Name: N/A

M7 ADC Sample Byte 1

VADC2_LC_BTM_2_M7_DATA1

Bits	Name	Description
7:0	DATA_15_8	M7 High byte of ADC output

21 VADC4_LC_VBAT_VADC_ADJ

0x00003500 - 0x00003503 RESERVED

0x00003504 VADC4_LC_VBAT_PERPH_TYPE

Type: R
Clock: pbus_wrclk
Reset State: 0x08
Reset Name: N/A

Peripheral Type

PMIC_CONSTANT

VADC4_LC_VBAT_PERPH_TYPE

Bits	Name	Description
7:0	TYPE	ADC

0x00003505 VADC4_LC_VBAT_PERPH_SUBTYPE

Type: R
Clock: pbus_wrclk
Reset State: 0x0C
Reset Name: N/A

Peripheral SubType

VADC4_LC_VBAT_PERPH_SUBTYPE

Bits	Name	Description
7:0	SUBTYPE	VADC1

0x00003508 VADC4_LC_VBAT_STATUS1

Type: R
Clock: pbus_wrclk
Reset State: 0x01
Reset Name: N/A

Status Registers

VADC4_LC_VBAT_STATUS1

Bits	Name	Description
4:3	OP_MODE	Selects basic mode of operation 0x0: NORM_MODE 0x1: CONV_SEQ_MODE 0x2: MEAS_INT_MODE
2	MEAS_INTERVAL_EN_STS	Interval Mode 0x0: INTERVAL_MODE_DISABLED 0x1: INTERVAL_MODE_ENABLED
1	REQ_STS	REQ_STS mirrors the REQ bit. When REQ is asserted the arbiter stores a descriptor in the conversion request queue. Bit is cleared when ADC conversion is completed. 0x0: REQ_NOT_IN_PROGRESS 0x1: REQ_IN_PROGRESS
0	EOC	End of conversion status flag. Bit is de-asserted when arbiter is servicing a conversion request and asserted when conversion is completed. After a conversion is requested, the EOC and REQ_STS bits can be polled to determine ADC conversion status as follows: REQ_STS EOC Arbiter state 1 1 Waiting for ADC to complete another process's conversion request. 1 0 ADC conversion occurring. 0 1 ADC conversion completed. 0 0 Invalid 0x0: CONV_NOT_COMPLETE 0x1: CONV_COMPLETE

0x00003509 VADC4_LC_VBAT_STATUS2

Type: R
Clock: pbus_wrclk
Reset State: 0x00
Reset Name: N/A

Status Registers

VADC4_LC_VBAT_STATUS2

Bits	Name	Description
7:3	CONV_SEQ_STATE	Conversion request and control states selected by SEL_FSM register field. SEL_FSM Signal 0 {conversion error, Request FSM state[3;0]} 1 VADC conversion control FSM state[4:0] 2 Sample average count[4:0] 3 Sample average count[9:5] Enumerations are Request FSM state[3:0]. VADC conversion control FSM state[4:0] encodings are: 0 IDLE 1 WAIT_VREG_OK_S 2 ENABLE_ADC_S 3 RESET_FILTER_S 4 WAIT_ADC_EOC_S 5 WAIT_SAMPLE_ACC_S 6 INCREMENT_READ_POINTER_S 7 WAIT_STORE_REQ_S 8 LATCH_FIFO_READ_DATA_S 9 COMPARE_OLD_NEW_REQ_S 10 WAIT_VREG_OK_D 11 WAIT1_IADC_FSM 12 ENABLE_ADC_D 13 WAIT2_IADC_FSM 14 RESET_FILTER_D 15 WAIT_ADC_EOC_D 16 WAIT3_IADC_FSM 17 WAIT_SAMPLE_ACC 18 INCREMENT_RD_POINTER_D 19 WAIT_STORE_WRITE_POINTERS 20 WAIT_COMPARE_RW_POINTERS 21 WAIT_STORE_REQ_D 22 LATCH_FIFO_READ_DATE_D 23 COMPARE_OLD_NEW_REQ_D 24 WAIT_PRECHARGE_S 25 DISABLE_ADC 0x0: IDLE_S 0x1: WAIT_TRIG_S 0x2: WAIT_HOLDOFF_S 0x3: CLEAR_ACC_S 0x4: STORE_REQ_S

VADC4_LC_VBAT_STATUS2 (cont.)

Bits	Name	Description
		0x4: STORE_REQ_S 0x5: WAIT_ADC_EOC_S 0x6: GEN_IRQ_S 0x7: IDLE_D 0x8: WAIT_TRIG_D 0x9: WAIT_HOLDOFF_D 0xA: CLEAR_ACC_D 0xB: STORE_WRITE_POINTERS 0xC: COMPARE_RW_POINTERS 0xD: STORE_REQ_D 0xE: WAIT_ADC_EOC_D 0xF: GEN_IRQ_D
1	FIFO_NOT_EMPTY_FLAG	Indicates conversion sequencer request written to FIFO when it was not empty. 0x0: FIFO_EMPTY_WHEN_REQ_MADE 0x1: FIFO_NOT_EMPTY_WHEN_REQ_MADE
0	CONV_SEQ_TIMEOUT_STS	Indicates conversion sequencer conversion was triggered by time out. 0x0: CONV_SEQ_TIMEOUT_FALSE 0x1: CONV_SEQ_TIMEOUT_TRUE

0x00003510 VADC4_LC_VBAT_INT_RT_STS

Type: R
Clock: pbus_wrclk
Reset State: 0x00
Reset Name: uvlo_perph_rb

Interrupt Real Time Status Bits

VADC4_LC_VBAT_INT_RT_STS

Bits	Name	Description
5	MIN_LOW_THR_INT_RT_STS	ADC minimum output lower than low threshold. Active high signal. 0x0: MIN_LOW_THR_INT_FALSE 0x1: MIN_LOW_THR_INT_TRUE
4	LOW_THR_INT_RT_STS	ADC output lower than low threshold. Active high signal. 0x0: LOW_THR_INT_FALSE 0x1: LOW_THR_INT_TRUE
3	HIGH_THR_INT_RT_STS	ADC output higher than high threshold. Active high signal. 0x0: HIGH_THR_INT_FALSE 0x1: HIGH_THR_INT_TRUE

VADC4_LC_VBAT_INT_RT_STS (cont.)

Bits	Name	Description
2	CONV_SEQ_TIME-OUT_INT_RT_STS	Indicates conversion sequencer conversion was triggered by SBI register field conversion request time out. 0x0: CONV_SEQ_TIMEOUT_FALSE 0x1: CONV_SEQ_TIMEOUT_TRUE
1	FIFO_NOT_EMPTY-_INT_RT_STS	Indicates conversion sequencer request written to FIFO when it was not empty. 0x0: FIFO_NOT_EMPTY_INT_FALSE 0x1: FIFO_EMPTY_INT_TRUE
0	EOC_INT_RT_STS	Secure process end of conversion interrupt. Active high signal two tcxo_clk cycles wide. 0x0: CONV_COMPLETE_INT_FALSE 0x1: CONV_COMPLETE_INT_TRUE

0x00003511 VADC4_LC_VBAT_INT_SET_TYPE

Type: RW
Clock: pbus_wrclk
Reset State: 0x00
Reset Name: uvlo_perph_rb

0 = use level trigger interrupts, 1 = use edge trigger interrupts

VADC4_LC_VBAT_INT_SET_TYPE

Bits	Name	Description
5	MIN_LOW_THR_INT_SET_TYPE	Minimum Low threshold interrupt set type 0x0: MIN_LOW_THR_INT_LEVEL 0x1: MIN_LOW_THR_INT_EDGE
4	LOW_THR_INT_SET_TYPE	Low threshold interrupt set type 0x0: LOW_THR_INT_LEVEL 0x1: LOW_THR_INT_EDGE
3	HIGH_THR_INT_SET_TYPE	High threshold interrupt set type 0x0: HIGH_THR_INT_LEVEL 0x1: HIGH_THR_INT_EDGE
2	CONV_SEQ_TIMEOUT_INT_SET_-TYPE	Conversion sequencer timeout interrupt set type 0x0: CONV_SEQ_TIMEOUT_LEVEL 0x1: CONV_SEQ_TIMEOUT_EDGE
1	FIFO_NOT_EMPTY_INT_SET_TYPE	FIFO not empty interrupt set type 0x0: FIFO_NOT_EMPTY_LEVEL 0x1: FIFO_NOT_EMPTY_EDGE

VADC4_LC_VBAT_INT_SET_TYPE (cont.)

Bits	Name	Description
0	EOC_SET_INT_TYPE	EOC interrupt set type 0x0: EOC_LEVEL 0x1: EOC_EDGE

0x00003512 VADC4_LC_VBAT_INT_POLARITY_HIGH

Type: RW
Clock: pbus_wrclk
Reset State: 0x00
Reset Name: uvlo_perph_rb

1= Interrupt will trigger on a level high (rising edge) event, 0 = level high triggering is disabled

VADC4_LC_VBAT_INT_POLARITY_HIGH

Bits	Name	Description
5	MIN_LOW_THR_INT_HIGH	Minimum Low threshold interrupt high polarity enabled 0x0: MIN_LOW_THR_INT_POL_HIGH_DISABLED 0x1: MIN_LOW_THR_INT_POL_HIGH_ENABLED
4	LOW_THR_INT_HIGH	Low threshold interrupt high polarity enabled 0x0: LOW_THR_INT_POL_HIGH_DISABLED 0x1: LOW_THR_INT_POL_HIGH_ENABLED
3	HIGH_THR_INT_HIGH	High threshold interrupt high polarity enabled 0x0: HIGH_THR_INT_POL_HIGH_DISABLED 0x1: HIGH_THR_INT_POL_HIGH_ENABLED
2	CONV_SEQ_TIME-OUT_INT_HIGH	Conversion sequencer interrupt high polarity enabled 0x0: CONV_SEQ_TIMEOUT_INT_POL_HIGH_DISABLED 0x1: CONV_SEQ_TIMEOUT_INT_POL_HIGH_ENABLED
1	FIFO_NOT_EMPTY-_INT_HIGH	FIFO not empty interrupt high polarity enabled 0x0: FIFO_NOT_EMPTY_INT_POL_HIGH_DISABLED 0x1: FIFO_NOT_EMPTY_INT_POL_HIGH_ENABLED
0	EOC_INT_HIGH	EOC interrupt high polarity enabled 0x0: EOC_INT_POL_HIGH_DISABLED 0x1: EOC_INT_POL_HIGH_ENABLED

0x00003513 VADC4_LC_VBAT_INT_POLARITY_LOW

Type: RW
Clock: pbus_wrclk
Reset State: 0x00
Reset Name: uvlo_perph_rb

1' = Interrupt will trigger on a level low (falling edge) event, '0' = level low triggering is disabled

VADC4_LC_VBAT_INT_POLARITY_LOW

Bits	Name	Description
5	MIN_LOW_THR_INT_HIGH	Minimum Low threshold interrupt low polarity enabled 0x0: MIN_LOW_THR_INT_POL_LOW_DISABLED 0x1: MIN_LOW_THR_INT_POL_LOW_ENABLED
4	LOW_THR_INT_HIGH	Low threshold interrupt low polarity enabled 0x0: LOW_THR_INT_POL_LOW_DISABLED 0x1: LOW_THR_INT_POL_LOW_ENABLED
3	HIGH_THR_INT_HIGH	High threshold interrupt low polarity enabled 0x0: HIGH_THR_INT_POL_LOW_DISABLED 0x1: HIGH_THR_INT_POL_LOW_ENABLED
2	CONV_SEQ_TIME-OUT_INT_LOW	Conversion sequencer interrupt low polarity enabled 0x0: CONV_SEQ_TIMEOUT_INT_POL_LOW_DISABLED 0x1: CONV_SEQ_TIMEOUT_INT_POL_LOW_ENABLED
1	FIFO_NOT_EMPTY-_INT_LOW	FIFO not empty interrupt low polarity enabled 0x0: FIFO_NOT_EMPTY_INT_POL_LOW_DISABLED 0x1: FIFO_NOT_EMPTY_INT_POL_LOW_ENABLED
0	EOC_INT_LOW	EOC interrupt low polarity enabled 0x0: EOC_INT_POL_LOW_DISABLED 0x1: EOC_INT_POL_LOW_ENABLED

0x00003514 VADC4_LC_VBAT_INT_LATCHED_CLR

Type: W
Clock: pbus_wrclk
Reset State: 0x00
Reset Name: uvlo_perph_rb

Writing a '1' to a bit in this register will rearm the interrupt when an interrupt is pending. It clears the internal sticky and sent bits

VADC4_LC_VBAT_INT_LATCHED_CLR

Bits	Name	Description
5	MIN_LOW_THR_INT_LATCHED_CLR	Minimum Low threshold interrupt latched clear
4	LOW_THR_INT_LATCHED_CLR	Low threshold interrupt latched clear
3	HIGH_THR_INT_LATCHED_CLR	High threshold interrupt latched clear
2	CONV_SEQ_TIMEOUT_INT_LATCHED_-CLR	Conversion sequencer interrupt latched clear
1	FIFO_NOT_EMPTY_INT_LATCHED_CLR	FIFO not empty interrupt latched clear
0	EOC_INT_LATCHED_CLR	EOC interrupt latched clear

0x00003515 VADC4_LC_VBAT_INT_EN_SET

Type: RW
Clock: pbus_wrclk
Reset State: 0x00
Reset Name: uvlo_perph_rb

Writing '0' to a bit in this register has no effect. Writing a '1' to a bit in this register will enable the corresponding interrupt. Reading this register will readback enable status

PMIC_SET_MASK

VADC4_LC_VBAT_INT_EN_SET

Bits	Name	Description
5	MIN_LOW_THR_INT_EN_SET	Minimum Low threshold interrupt enable set 0x0: MIN_LOW_THR_INT_DISABLED 0x1: MIN_LOW_THR_INT_ENBLED
4	LOW_THR_INT_EN_SET	Low threshold interrupt enable set 0x0: LOW_THR_INT_DISABLED 0x1: LOW_THR_INT_ENBLED
3	HIGH_THR_INT_EN_SET	High threshold interrupt enable set 0x0: HIGH_THR_INT_DISABLED 0x1: HIGH_THR_INT_ENBLED
2	CONV_SEQ_TIME-OUT_INT_EN_SET	Conversion sequencer interrupt enable set 0x0: CONV_SEQ_TIMEOUT_INT_DISABLED 0x1: CONV_SEQ_TIMEOUT_INT_ENBLED
1	FIFO_NOT_EMPTY_INT_EN_SET	FIFO not empty interrupt enable set 0x0: FIFO_NOT_EMPTY_INT_DISABLED 0x1: FIFO_NOT_EMPTY_INT_ENBLED
0	EOC_INT_EN_SET	EOC interrupt enable set 0x0: EOC_INT_DISABLED 0x1: EOC_INT_ENBLED

0x00003516 VADC4_LC_VBAT_INT_EN_CLR

Type: RW
Clock: pbus_wrclk
Reset State: 0x00
Reset Name: uvlo_perph_rb

Writing a '0' to a bit in this register has no effect. Writing a '1' to a bit in this register will disable the corresponding interrupt. Reading this register will readback enable status

PMIC_CLR_MASK=INT_EN_SET

VADC4_LC_VBAT_INT_EN_CLR

Bits	Name	Description
5	MIN_LOW_THR_INT_EN_CLR	Minimum Low threshold interrupt enable clear 0x0: MIN_LOW_THR_INT_DISABLED 0x1: MIN_LOW_THR_INT_ENBLED
4	LOW_THR_INT_EN_CLR	Low threshold interrupt enable clear 0x0: LOW_THR_INT_DISABLED 0x1: LOW_THR_INT_ENBLED
3	HIGH_THR_INT_EN_CLR	High threshold interrupt enable clear 0x0: HIGH_THR_INT_DISABLED 0x1: HIGH_THR_INT_ENBLED
2	CONV_SEQ_TIMEOUT_INT_EN_CLR	Conversion sequencer interrupt enable clear 0x0: CONV_SEQ_TIMEOUT_INT_DISABLED 0x1: CONV_SEQ_TIMEOUT_INT_ENBLED
1	FIFO_NOT_EMPTY_INT_EN_CLR	FIFO not empty interrupt enable clear 0x0: FIFO_NOT_EMPTY_INT_DISABLED 0x1: FIFO_NOT_EMPTY_INT_ENBLED
0	EOC_INT_EN_CLR	EOC interrupt enable clear 0x0: EOC_INT_DISABLED 0x1: EOC_INT_ENBLED

0x00003518 VADC4_LC_VBAT_INT_LATCHED_STS

Type: R
Clock: pbus_wrclk
Reset State: 0x00
Reset Name: uvlo_perph_rb

Debug: Latched (Sticky) Interrupt. '1' indicates that the interrupt has triggered. Once the latched bit is set it can only be cleared by writing the clear bit.

VADC4_LC_VBAT_INT_LATCHED_STS

Bits	Name	Description
5	MIN_LOW_THR_INT_LATCHED_STS	Minimum Low threshold interrupt latched 0x0: MIN_LOW_THR_INT_LATCHED_FALSE 0x1: MIN_LOW_THR_INT_LATCHED_TRUE
4	LOW_THR_INT_LATCHED_STS	Low threshold interrupt latched 0x0: LOW_THR_INT_LATCHED_FALSE 0x1: LOW_THR_INT_LATCHED_TRUE
3	HIGH_THR_INT_LATCHED_STS	High threshold interrupt latched 0x0: HIGH_THR_INT_LATCHED_FALSE 0x1: HIGH_THR_INT_LATCHED_TRUE

VADC4_LC_VBAT_INT_LATCHED_STS (cont.)

Bits	Name	Description
2	CONV_SEQ_TIME-OUT_INT_LATCHED_STS	Conversion sequencer interrupt latched 0x0: CONV_SEQ_TIMEOUT_INT_LATCHED_FALSE 0x1: CONV_SEQ_TIMEOUT_INT_LATCHED_TRUE
1	FIFO_NOT_EMPTY-_INT_LATCHED_STS	FIFO not empty interrupt latched 0x0: FIFO_NOT_EMPTY_INT_LATCHED_FALSE 0x1: FIFO_NOT_EMPTY_INT_LATCHED_TRUE
0	EOC_INT_LATCHED_STS	EOC interrupt latched 0x0: EOC_INT_LATCHED_FALSE 0x1: EOC_INT_LATCHED_TRUE

0x00003519 VADC4_LC_VBAT_INT_PENDING_STS

Type: R
Clock: pbus_wrclk
Reset State: 0x00
Reset Name: uvlo_perph_rb

Debug: Pending is set if interrupt has been sent but not cleared.

VADC4_LC_VBAT_INT_PENDING_STS

Bits	Name	Description
5	MIN_LOW_THR_INT_PENDING_STS	Minimum Low threshold interrupt pending 0x0: MIN_LOW_THR_INT_PENDING_FALSE 0x1: MIN_LOW_THR_INT_PENDING_TRUE
4	LOW_THR_INT_PENDING_STS	Low threshold interrupt pending 0x0: LOW_THR_INT_PENDING_FALSE 0x1: LOW_THR_INT_PENDING_TRUE
3	HIGH_THR_INT_PENDING_STS	High threshold interrupt pending 0x0: HIGH_THR_INT_PENDING_FALSE 0x1: HIGH_THR_INT_PENDING_TRUE
2	CONV_SEQ_TIMEOUT_INT_PEND-ING_STS	Conversion sequencer interrupt pending 0x0: CONV_SEQ_TIMEOUT_INT_PENDING_FALSE 0x1: CONV_SEQ_TIMEOUT_INT_PENDING_TRUE
1	FIFO_NOT_EMPTY_INT_PEND-ING_STS	FIFO not empty interrupt pending 0x0: FIFO_NOT_EMPTY_INT_PENDING_FALSE 0x1: FIFO_NOT_EMPTY_INT_PENDING_TRUE
0	EOC_INT_PENDING_STS	EOC interrupt pending 0x0: EOC_INT_PENDING_FALSE 0x1: EOC_INT_PENDING_TRUE

0x0000351A VADC4_LC_VBAT_INT_MID_SEL

Type: RW
Clock: pbus_wrclk
Reset State: 0x00
Reset Name: uvlo_perph_rb

Selects the MID that will receive the interrupt

VADC4_LC_VBAT_INT_MID_SEL

Bits	Name	Description
1:0	INT_MID_SEL	Selects the MID that will receive the interrupt

0x0000351B VADC4_LC_VBAT_INT_PRIORITY

Type: RW
Clock: pbus_wrclk
Reset State: 0x00
Reset Name: uvlo_perph_rb

Selects the SPMI interrupt priority

VADC4_LC_VBAT_INT_PRIORITY

Bits	Name	Description
0	INT_PRIORITY	Selects the SPMI interrupt priority 0x0: SR 0x1: A

0x00003540 VADC4_LC_VBAT_MODE_CTL

Type: RW
Clock: pbus_wrclk
Reset State: 0x03
Reset Name: uvlo_perph_rb

Settings Common to Input and Output

VADC4_LC_VBAT_MODE_CTL

Bits	Name	Description
4:3	OP_MODE	Selects basic mode of operation: 00=Normal Mode - Single measurement 01=Conversion Sequencer - Single measurement using conversion sequencer 10=Measurement Interval - Single or Continuous measurements at specified delay/interval 0x0: NORM_MODE 0x1: CONV_SEQ_MODE 0x2: MEAS_INT_MODE
2	VREF_XO_THM_FORCE	When cleared, VDD_REF is connected to XO thermistor in active mode, disconnected in sleep mode When set, force VDD_REF to be connected to the XO thermistor regardless the status of sleep 0x0: VREF_XO_THM_FORCE_FALSE 0x1: VREF_XO_THM_FORCE_TRUE
1	AMUX_TRIM_EN	Enable AMUX trim 0x0: AMUX_TRIM_DISABLED 0x1: AMUX_TRIM_ENABLED
0	ADC_TRIM_EN	Enable ADC trim 0x0: ADC_TRIM_DISABLED 0x1: ADC_TRIM_ENABLED

0x00003546 VADC4_LC_VBAT_EN_CTL1

Type: RW
Clock: pbus_wrclk
Reset State: 0x00
Reset Name: uvlo_perph_rb

Enables ADC module.

VADC4_LC_VBAT_EN_CTL1

Bits	Name	Description
7	ADC_EN	Enables ADC module. 0x0: ADC_DISABLED 0x1: ADC_ENABLED

0x00003548 VADC4_LC_VBAT_ADC_CH_SEL_CTL

Type: RW
Clock: pbus_wrclk
Reset State: 0x06
Reset Name: uvlo_perph_rb

ADC Channel selection.

VADC4_LC_VBAT_ADC_CH_SEL_CTL

Bits	Name	Description
7:0	ADC_CH_SEL	ADC Channel selection.

0x00003550 VADC4_LC_VBAT_ADC_DIG_PARAM

Type: RW
Clock: pbus_wrclk
Reset State: 0x04
Reset Name: uvlo_perph_rb

ADC Digital Parameters

VADC4_LC_VBAT_ADC_DIG_PARAM

Bits	Name	Description
3:2	DEC_RATIO_SEL	Decimation ratio: 0x0: DECI_512 0x1: DECI_1K 0x2: DECI_2K 0x3: DECI_4K
1:0	CLK_SEL	Select ADC clock rate: 0x0: CLK_SEL_2P4MHZ 0x1: CLK_SEL_4P8MHZ 0x2: CLK_SEL_9P6MHZ 0x3: CLK_SEL_19P2MHZ

0x00003551 VADC4_LC_VBAT_HW_SETTLE_DELAY

Type: RW
Clock: pbus_wrclk
Reset State: 0x00
Reset Name: uvlo_perph_rb

Settle Delay

VADC4_LC_VBAT_HW_SETTLE_DELAY

Bits	Name	Description
3:0	HW_SETTLE_DELAY	Time between AMUX getting configured and the ADC starting conversion. Delay = 100us*(value) for value<11, and 2ms*(value-10) otherwise 0x0: HW_SETTLE_DELAY_0US 0x1: HW_SETTLE_DELAY_100US 0x2: HW_SETTLE_DELAY_200US 0x3: HW_SETTLE_DELAY_300US 0x4: HW_SETTLE_DELAY_400US 0x5: HW_SETTLE_DELAY_500US 0x6: HW_SETTLE_DELAY_600US 0x7: HW_SETTLE_DELAY_700US 0x8: HW_SETTLE_DELAY_800US 0x9: HW_SETTLE_DELAY_900US 0xA: HW_SETTLE_DELAY_1MS 0xB: HW_SETTLE_DELAY_2MS 0xC: HW_SETTLE_DELAY_4MS 0xD: HW_SETTLE_DELAY_6MS 0xE: HW_SETTLE_DELAY_8MS 0xF: HW_SETTLE_DELAY_10MS

0x00003552 VADC4_LC_VBAT_CONV_REQ

Type: W
Clock: pbus_wrclk
Reset State: 0x00
Reset Name: req_rb

Conversion Request

VADC4_LC_VBAT_CONV_REQ

Bits	Name	Description
7	REQ	Conversion request strobe. When bit is asserted the arbiter stores a descriptor in the conversion request queue. Bit is cleared when ADC conversion is completed. 0x0: CONV_REQ_FALSE 0x1: CONV_REQ_TRUE

0x00003554 VADC4_LC_VBAT_CONV_SEQ_CTL

Type: RW
Clock: pbus_wrclk
Reset State: 0x45
Reset Name: uvlo_perph_rb

Conversion Sequencer Control

VADC4_LC_VBAT_CONV_SEQ_CTL

Bits	Name	Description
7:4	CONV_SEQ_HOLDOFF	Select delay from conversion trigger signal (i.e. adc_conv_seq_trig) transition to ADC enable. Delay = 25us*(value+1). Actual delay will be longer if request is stored in a non empty FIFO and/or conversion needs to wait for LDO OK handshake. 0x0: SEQ_HOLD_25US 0x2: SEQ_HOLD_75US 0x3: SEQ_HOLD_100US 0x4: SEQ_HOLD_125US 0x5: SEQ_HOLD_150US 0x6: SEQ_HOLD_175US 0x7: SEQ_HOLD_200US 0x8: SEQ_HOLD_225US 0x9: SEQ_HOLD_250US 0xA: SEQ_HOLD_275US 0xB: SEQ_HOLD_300US 0xC: SEQ_HOLD_325US 0xD: SEQ_HOLD_350US 0xE: SEQ_HOLD_375US 0xF: SEQ_HOLD_400US
3:0	CONV_SEQ_TIMEOUT	Select delay (0 to 15ms) from conversion request to triggering conversion sequencer hold off timer. 0x0: SEQ_TIMEOUT_0MS 0x1: SEQ_TIMEOUT_1MS 0x2: SEQ_TIMEOUT_2MS 0x3: SEQ_TIMEOUT_3MS 0x4: SEQ_TIMEOUT_4MS 0x5: SEQ_TIMEOUT_5MS 0x6: SEQ_TIMEOUT_6MS 0x7: SEQ_TIMEOUT_7MS 0x8: SEQ_TIMEOUT_8MS 0x9: SEQ_TIMEOUT_9MS 0xA: SEQ_TIMEOUT_10MS 0xB: SEQ_TIMEOUT_11MS 0xC: SEQ_TIMEOUT_12MS 0xD: SEQ_TIMEOUT_13MS 0xE: SEQ_TIMEOUT_14MS 0xF: SEQ_TIMEOUT_15MS

0x00003555 VADC4_LC_VBAT_CONV_SEQ_TRIG_CTL

Type: RW
Clock: pbus_wrclk
Reset State: 0x00
Reset Name: uvlo_perph_rb

Conversion Sequencer Trigger Select

VADC4_LC_VBAT_CONV_SEQ_TRIG_CTL

Bits	Name	Description
7	CONV_SEQ_TRIG_COND	Select conversion trigger condition(s) that starts ADC conversion hold off timer. 0x0 - Falling edge 0x1 - Rising edge
1:0	CONV_SEQ_TRIG_SEL	Select conversion sequencer trigger input signal. 0x0: ADC_TRIG0 0x1: ADC_TRIG1 0x2: ADC_TRIG2 0x3: ADC_TRIG3

0x00003557 VADC4_LC_VBAT_MEAS_INTERVAL_CTL

Type: RW
Clock: pbus_wrclk
Reset State: 0x00
Reset Name: uvlo_perph_rb

Interval Mode Control

VADC4_LC_VBAT_MEAS_INTERVAL_CTL

Bits	Name	Description
3:0	MEAS_INTERVAL_TIME	Select measurement interval time (i.e., If value=0, use 0ms, else use 2^(value+4)/32768). 0x0: MEAS_INTERVAL_0MS 0x1: MEAS_INTERVAL_1P0MS 0x2: MEAS_INTERVAL_2P0MS 0x3: MEAS_INTERVAL_3P9MS 0x4: MEAS_INTERVAL_7P8MS 0x5: MEAS_INTERVAL_15P6MS 0x6: MEAS_INTERVAL_31P3MS 0x7: MEAS_INTERVAL_62P5MS 0x8: MEAS_INTERVAL_125MS 0x9: MEAS_INTERVAL_250MS 0xA: MEAS_INTERVAL_500MS 0xB: MEAS_INTERVAL_1S 0xC: MEAS_INTERVAL_2S 0xD: MEAS_INTERVAL_4S 0xE: MEAS_INTERVAL_8S 0xF: MEAS_INTERVAL_16S

0x00003559 VADC4_LC_VBAT_MEAS_INTERVAL_OP_CTL

Type: RW
Clock: pbus_wrclk
Reset State: 0x00
Reset Name: uvlo_perph_rb

Interval mode select

VADC4_LC_VBAT_MEAS_INTERVAL_OP_CTL

Bits	Name	Description
7	MEAS_INTERVAL_OP	Interval mode select 0x0: INTERVAL_MODE_DISABLED 0x1: INTERVAL_MODE_ENABLED

0x0000355A VADC4_LC_VBAT_FAST_AVG_CTL

Type: RW
Clock: pbus_wrclk
Reset State: 0x00
Reset Name: uvlo_perph_rb

Fast Average Control

VADC4_LC_VBAT_FAST_AVG_CTL

Bits	Name	Description
3:0	FAST_AVG_SAMPLES	Select number of samples for use in fast average mode (i.e. 2^(value). 0x0: AVG_1_SAMPLE 0x1: AVG_2_SAMPLES 0x2: AVG_4_SAMPLES 0x3: AVG_8_SAMPLES 0x4: AVG_16_SAMPLES 0x5: AVG_32_SAMPLES 0x6: AVG_64_SAMPLES 0x7: AVG_128_SAMPLES 0x8: AVG_256_SAMPLES 0x9: AVG_512_SAMPLES

0x0000355B VADC4_LC_VBAT_FAST_AVG_EN

Type: RW
Clock: pbus_wrclk
Reset State: 0x00
Reset Name: uvlo_perph_rb

Fast Average Enable

VADC4_LC_VBAT_FAST_AVG_EN

Bits	Name	Description
7	FAST_AVG_EN	Select low latency for multiple conversions 0x0: FAST_AVG_DISABLED 0x1: FAST_AVG_ENABLED

0x0000355C VADC4_LC_VBAT_LOW_THR0

Type: RW
Clock: pbus_wrclk
Reset State: 0x00
Reset Name: uvlo_perph_rb

Low Threshold Byte 0

VADC4_LC_VBAT_LOW_THR0

Bits	Name	Description
7:0	LOW_THR_7_0	Low byte of low threshold detector

0x0000355D VADC4_LC_VBAT_LOW_THR1

Type: RW
Clock: pbus_wrclk
Reset State: 0x00
Reset Name: uvlo_perph_rb

Low Threshold Byte 1

VADC4_LC_VBAT_LOW_THR1

Bits	Name	Description
7:0	LOW_THR_15_8	High byte of low threshold detector

0x0000355E VADC4_LC_VBAT_HIGH_THR0

Type: RW
Clock: pbus_wrclk
Reset State: 0xFF
Reset Name: uvlo_perph_rb

High Threshold Byte 0

VADC4_LC_VBAT_HIGH_THR0

Bits	Name	Description
7:0	HIGH_THR_7_0	Low byte of high threshold detector

0x0000355F VADC4_LC_VBAT_HIGH_THR1

Type: RW
Clock: pbus_wrclk
Reset State: 0xFF
Reset Name: uvlo_perph_rb

High Threshold Byte 1

VADC4_LC_VBAT_HIGH_THR1

Bits	Name	Description
7:0	HIGH_THR_15_8	High byte of high threshold detector

0x00003560 VADC4_LC_VBAT_DATA0

Type: R
Clock: pbus_wrclk
Reset State: 0x00000000
Reset Name: uvlo_perph_rb

ADC Sample Byte 0

VADC4_LC_VBAT_DATA0

Bits	Name	Description
7:0	DATA_7_0	DEF: X Low byte of ADC output

0x00003561 VADC4_LC_VBAT_DATA1

Type: R
Clock: pbus_wrclk
Reset State: 0x00000000
Reset Name: uvlo_perph_rb

ADC Sample Byte 1

VADC4_LC_VBAT_DATA1

Bits	Name	Description
7:0	DATA_15_8	DEF: X High byte of ADC output

0x00003562 VADC4_LC_VBAT_MIN_LOW_THR0

Type: RW
Clock: pbus_wrclk
Reset State: 0x00
Reset Name: uvlo_perph_rb

Minimum Low Threshold Byte 0

VADC4_LC_VBAT_MIN_LOW_THR0

Bits	Name	Description
7:0	MIN_LOW_THR_7_0	Low byte of minimum low threshold detector

0x00003563 VADC4_LC_VBAT_MIN_LOW_THR1

Type: RW
Clock: pbus_wrclk
Reset State: 0x00
Reset Name: uvlo_perph_rb

Minimum Low Threshold Byte 1

VADC4_LC_VBAT_MIN_LOW_THR1

Bits	Name	Description
7:0	MIN_LOW_THR_15_8	High byte of minimum low threshold detector

0x00003566 VADC4_LC_VBAT_MIN_DATA0

Type: R
Clock: pbus_wrclk
Reset State: 0x00000000
Reset Name: uvlo_perph_rb

Minimum ADC Sample Byte 0

VADC4_LC_VBAT_MIN_DATA0

Bits	Name	Description
7:0	MIN_DATA_7_0	DEF: X Low byte of minimum ADC output

0x00003567 VADC4_LC_VBAT_MIN_DATA1

Type: R
Clock: pbus_wrclk
Reset State: 0x00000000
Reset Name: uvlo_perph_rb

Minimum ADC Sample Byte 1

VADC4_LC_VBAT_MIN_DATA1

Bits	Name	Description
7:0	MIN_DATA_15_8	DEF: X High byte of minimum ADC output

22 BMS_VM

0x00004000 - 0x00004001 RESERVED

0x00004004 BMS_VM_PERPH_TYPE

Type: R
Clock: pbus_wrclk
Reset State: 0x0D
Reset Name: N/A

Peripheral Type

PMIC_CONSTANT

BMS_VM_PERPH_TYPE

Bits	Name	Description
7:0	TYPE	BMS 0xD: BMS

0x00004005 BMS_VM_PERPH_SUBTYPE

Type: R
Clock: pbus_wrclk
Reset State: 0x02
Reset Name: N/A

Peripheral SubType

PMIC_CONSTANT

BMS_VM_PERPH_SUBTYPE

Bits	Name	Description
7:0	SUBTYPE	vm_bms 0x2: VM_BMS

0x00004008 BMS_VM_STATUS1

Type: R
Clock: pbus_wrclk
Reset State: 0x00
Reset Name: N/A

Status Registers get updated when this register is written (value does not matter).

BMS_VM_STATUS1

Bits	Name	Description
7	BMS_OK	BMS initial open circuit voltage measurement completed. (This bit will be set when the BMS controller has successfully obtained a PON OCV value) 0x0: BMS_PON_OCV_NOT_DONE 0x1: BMS_PON_OCV_DONE
6	FSM_FORCED	This bit indicates that BMS FSM has being forced into a specific mode by control bits (by the software). If software removes the forcing, then this bit will be auto-cleared 0x0: FSM_NOT_FORCED 0x1: FSM_FORCED
5:3	FSM_STATE	These set of bits is the latched version for current state of the BMS Controller's FSM. In order to get the updated value, SW need to do a dummy write to this register to latch the real-time FSM state, before read it. The write will not change anything, just latch the FSM state value. FSM_STATE definition: S1 - (normal mode) S2 - (CV charging mode) S3 - (measure OCV/sleep mode) S7 - (Power-on) 0x1: S1 0x2: S2 0x3: S3 0x7: S7 0x0: IDLE

0x00004009 BMS_VM_STATUS2

Type: R
Clock: pbus_wrclk
Reset State: 0x00
Reset Name: N/A

BMS_VM_STATUS2

Bits	Name	Description
7:4	COUNT_OF_RE-SULTS_IN_FIFO_SD	This is the shadow copy indication of how many individual elements in the FIFO buffer (fully completed local averages only) have been computed by digital logic since last interrupt happened. When an interrupt is raised by the BMS controller, software picks up this value as one of the inputs for SOC computation. This count does not include partial averages that may occur when a premature state-change event happens. The BMS controller continues writing new values into the FIFO irrespective of whether software picks this or not.
3:0	COUNT_OF_RE-SULTS_IN_FIFO_RT	This is the real-time indication of how many individual elements in the FIFO buffer (fully completed local averages only) have been computed by digital logic up to current time.

0x00004010 BMS_VM_INT_RT_STS

Type: R
Clock: pbus_wrclk
Reset State: 0x00
Reset Name: N/A

Interrupt Real Time Status Bits

BMS_VM_INT_RT_STS

Bits	Name	Description
5	FSM_STAT_CH-G_INT_RT_STS	This interrupt indicates that FSM has switched states. This could mean that a pre-mature truncation of state has happened. This necessitates that the software picks up a) all the values from the FIFO elements and b) the shadow copy of accumulator count and c) the shadow copy of accumulator data. 0x0: FSM_STAT_CHG_INT_RT_STATUS_LOW 0x1: FSM_STAT_CHG_INT_RT_STATUS_HIGH
4	FIFO_UPDATE_-DONE_INT_RT_STS	This is the main interrupt of this BMS controller (VM BMS module). This interrupt triggers a software request for picking up the values from the populated FIFO buffers for SOC computation. This interrupt will occur when VM BMS digital logic has completely populated the desired number of FIFO registers set by software 0x0: FIFO_UPDATE_DONE_INT_RT_STS_LOW 0x1: FIFO_UPDATE_DONE_INT_RT_STS_HIGH

BMS_VM_INT_RT_STS (cont.)

Bits	Name	Description
3	OCV_THR_INT_RT_STS	This is used to interrupt software when OCV has gone below a threshold setting (settable in 0x50 and 0x51), and enabled by a bit in 0x53 0x0: OCV_THR_INT_RT_STATUS_LOW 0x1: OCV_THR_INT_RT_STATUS_HIGH
2	GOOD_OCV_INT_RT_STS	Last good open circuit voltage triggers this interrupt. This occurs in S3 state based on settled Vbat sample measurement within a window governed by a tolerance setting (in a fixed? time base?). Software can either ignore this (and hence, use the the values available at 0x6A and 0x6B whenever it wakes up next), OR use respond to this interrupt by waking up everytime. One 32kHz clock cycle wide HIGH signal. 0x0: GOOD_OCV_INT_RT_STATUS_LOW 0x1: GOOD_OCV_INT_RT_STATUS_HIGH
1	ENTER_CV_STATE_INT_RT_STS	BMS FSM has entered CV state based on debounced input from Charger. Signal high when entering S2 CV state. 0x0: ENTER_CV_STATE_INT_RT_STATUS_LOW 0x1: ENTER_CV_STATE_INT_RT_STATUS_HIGH
0	LEAVE_CV_STATE_INT_RT_STS	BMS FSM has leaved OCV state based on sleep_b. Signal high when leaving S3 OCV state. 0x0: LEAVE_OCV_STATE_INT_RT_STATUS_LOW 0x1: LEAVE_OCV_STATE_INT_RT_STATUS_HIGH

0x00004011 BMS_VM_INT_SET_TYPE

Type: RW
Clock: pbus_wrclk
Reset State: 0x00
Reset Name: PERPH_RB

0 = use level trigger interrupts, 1 = use edge trigger interrupts

BMS_VM_INT_SET_TYPE

Bits	Name	Description
5	FSM_STAT_CHG_INT_TYPE	0x0: FSM_STAT_CHG_LEVEL 0x1: FSM_STAT_CHG_EDGE
4	FIFO_UPDATE_DONE_INT_TYPE	0x0: FIFO_UPDATE_DONE_LEVEL 0x1: FIFO_UPDATE_DONE_EDGE
3	OCV_THR_INT_TYPE	0x0: OCV_THR_LEVEL 0x1: OCV_THR_EDGE
2	GOOD_OCV_INT_TYPE	0x0: GOOD_OCV_LEVEL 0x1: GOOD_OCV_EDGE

BMS_VM_INT_SET_TYPE (cont.)

Bits	Name	Description
1	ENTER_CV_STATE_INT_TYPE	0x0: ENTER_CV_STATE_LEVEL 0x1: ENTER_CV_STATE_EDGE
0	LEAVE_CV_STATE_INT_TYPE	0x0: LEAVE_OCV_STATE_LEVEL 0x1: LEAVE_OCV_STATE_EDGE

0x00004012 BMS_VM_INT_POLARITY_HIGH

Type: R
Clock: pbus_wrclk
Reset State: 0x3F
Reset Name: PERPH_RB

1= Interrupt will trigger on a level high (rising edge) event, 0 = level high triggering is disabled

BMS_VM_INT_POLARITY_HIGH

Bits	Name	Description
5	FSM_STAT_CHG_INT_HIGH	0x0: FSM_STAT_CHG_HIGH_TRIGGER_DISABLED 0x1: FSM_STAT_CHG_THR_HIGH_TRIGGER_ENABLED
4	FIFO_UPDATE_-DONE_INT_HIGH	0x0: FIFO_UPDATE_DONE_HIGH_TRIGGER_DISABLED 0x1: FIFO_UPDATE_DONE_HIGH_TRIGGER_ENABLED
3	OCV_THR_INT_HIGH	0x0: OCV_THR_HIGH_TRIGGER_DISABLED 0x1: OCV_THR_HIGH_TRIGGER_ENABLED
2	GOOD_OCV_INT_HIGH	0x0: GOOD_OCV_HIGH_TRIGGER_DISABLED 0x1: GOOD_OCV_HIGH_TRIGGER_ENABLED
1	ENTER_CV_STATE_INT_HI GH	0x0: ENTER_CV_STATE_HIGH_TRIGGER_DISABLED 0x1: ENTER_CV_STATE_HIGH_TRIGGER_ENABLED
0	LEAVE_CV_STATE_INT_HI GH	0x0: LEAVE_OCV_STATE_HIGH_TRIGGER_DISABLED 0x1: LEAVE_OCV_STATE_HIGH_TRIGGER_ENABLED

0x00004013 BMS_VM_INT_POLARITY_LOW

Type: R
Clock: pbus_wrclk
Reset State: 0x00
Reset Name: PERPH_RB

1 = Interrupt will trigger on a level low (falling edge) event, 0 = level low triggering is disabled

BMS_VM_INT_POLARITY_LOW

Bits	Name	Description
5	FSM_STAT_CHG_INT_LOW	0x0: FSM_STAT_CHG_LOW_TRIGGER_DISABLED 0x1: FSM_STAT_CHG_LOW_TRIGGER_ENABLED
4	FIFO_UPDATE_- DONE_INT_LOW	0x0: FIFO_UPDATE_DONE_LOW_TRIGGER_DISABLED 0x1: FIFO_UPDATE_DONE_LOW_TRIGGER_ENABLED
3	OCV_THR_INT_LOW	0x0: OCV_THR_LOW_TRIGGER_DISABLED 0x1: OCV_THR_LOW_TRIGGER_ENABLED
2	GOOD_OCV_INT_LOW	0x0: GOOD_OCV_LOW_TRIGGER_DISABLED 0x1: GOOD_OCV_LOW_TRIGGER_ENABLED
1	ENTER_CV_STATE_INT_LOW	0x0: ENTER_CV_STATE_LOW_TRIGGER_DISABLED 0x1: ENTER_CV_STATE_LOW_TRIGGER_ENABLED
0	LEAVE_CV_STATE_INT_LOW	0x0: LEAVE_OCV_STATE_LOW_TRIGGER_DISABLED 0x1: LEAVE_OCV_STATE_LOW_TRIGGER_ENABLED

0x00004014 BMS_VM_INT_LATCHED_CLR

Type: W
Clock: pbus_wrclk
Reset State: 0x00
Reset Name: PERPH_RB

writing a 1 to this interrupt will rearm the interrupt when an interrupt is pending. It clears the internal sticky and sent bits

BMS_VM_INT_LATCHED_CLR

Bits	Name	Description
5	FSM_STAT_CHG_INT_CLR	0x0: FSM_STAT_CHG_LATCHED 0x1: FSM_STAT_CHG_LATCH_CLEAR
4	FIFO_UPDATE_DONE_INT_CLR	0x0: FIFO_UPDATE_DONE_LATCHED 0x1: FIFO_UPDATE_DONE_LATCH_CLEAR
3	OCV_THR_INT_CLR	0x0: OCV_THR_LATCHED 0x1: OCV_THR_LATCH_CLEAR
2	GOOD_OCV_INT_CLR	0x0: GOOD_OCV_LATCHED 0x1: GOOD_OCV_LATCH_CLEAR
1	ENTER_CV_STATE_INT_CLR	0x0: ENTER_CV_STATE_LATCHED 0x1: ENTER_CV_STATE_LATCH_CLEAR
0	LEAVE_CV_STATE_INT_CLR	0x0: LEAVE_OCV_STATE_LATCHED 0x1: LEAVE_OCV_STATE_LATCH_CLEAR

0x00004015 BMS_VM_INT_EN_SET

Type: RW
Clock: pbus_wrclk
Reset State: 0x00
Reset Name: PERPH_RB

writing 0 to this register has no effect. Writing a 1 will enable the corresponding interrupt. Reading this register will readback enable status

PMIC_SET_MASK

BMS_VM_INT_EN_SET

Bits	Name	Description
5	FSM_STAT_CHG_INT_EN_SET	0x0: FSM_STAT_CHG_INT_DISABLED 0x1: FSM_STAT_CHG_INT_ENABLED
4	FIFO_UPDATE_DONE_INT_EN_SET	0x0: FIFO_UPDATE_DONE_INT_DISABLED 0x1: FIFO_UPDATE_DONE_INT_ENABLED
3	OCV_THR_INT_EN_SET	0x0: OCV_THR_INT_DISABLED 0x1: OCV_THR_INT_ENABLED
2	GOOD_OCV_INT_EN_SET	0x0: GOOD_OCV_INT_DISABLED 0x1: GOOD_OCV_INT_ENABLED
1	ENTER_CV_STATE_INT_EN_SET	0x0: ENTER_CV_STATE_INT_DISABLED 0x1: ENTER_CV_STATE_INT_ENABLED
0	LEAVE_CV_STATE_INT_EN_SET	0x0: LEAVE_OCV_STATE_INT_DISABLED 0x1: LEAVE_OCV_STATE_INT_ENABLED

0x00004016 BMS_VM_INT_EN_CLR

Type: RW
Clock: pbus_wrclk
Reset State: 0x00
Reset Name: PERPH_RB

writing 0 to this register has no effect. Writing a 1 will disable the corresponding interrupt. Reading this register will readback enable status

PMIC_CLR_MASK=INT_EN_SET

BMS_VM_INT_EN_CLR

Bits	Name	Description
5	FSM_STAT_CHG_INT_EN_CLR	0x0: FSM_STAT_CHG_INT_DISABLED 0x1: FSM_STAT_CHG_INT_ENABLED

BMS_VM_INT_EN_CLR (cont.)

Bits	Name	Description
4	FIFO_UPDATE_DONE_INT_EN_CLR	0x0: FIFO_UPDATE_DONE_INT_DISABLED 0x1: FIFO_UPDATE_DONE_INT_ENABLED
3	OCV_THR_INT_EN_CLR	0x0: OCV_THR_INT_DISABLED 0x1: OCV_THR_INT_ENABLED
2	GOOD_OCV_INT_EN_CLR	0x0: GOOD_OCV_INT_DISABLED 0x1: GOOD_OCV_INT_ENABLED
1	ENTER_CV_STATE_INT_EN_CLR	0x0: ENTER_CV_STATE_INT_DISABLED 0x1: ENTER_CV_STATE_INT_ENABLED
0	LEAVE_CV_STATE_INT_EN_CLR	0x0: LEAVE_OCV_STATE_INT_DISABLED 0x1: LEAVE_OCV_STATE_INT_ENABLED

0x00004018 BMS_VM_INT_LATCHED_STS

Type: R
Clock: pbus_wrclk
Reset State: 0x00
Reset Name: N/A

Debug: Latched (Sticky) Interrupt. 1 indicates that the interrupt has triggered. Once the latched bit is set it can only be cleared by writing the clear bit.

BMS_VM_INT_LATCHED_STS

Bits	Name	Description
5	FSM_STAT_CHG_INT_LATCHED_STS	0x0: FSM_STAT_CHG_NO_INT_LATCHED 0x1: FSM_STAT_CHG_INTERRUPT_LATCHED
4	FIFO_UPDATE_- DONE_INT_LATCHED_STS	0x0: FIFO_UPDATE_DONE_NO_INT_LATCHED 0x1: FIFO_UPDATE_DONE_INTERRUPT_LATCHED
3	OCV_THR_INT_LATCHED_STS	0x0: OCV_THR_NO_INT_LATCHED 0x1: OCV_THR_INTERRUPT_LATCHED
2	GOOD_OCV_INT_LATCHED_STS	0x0: GOOD_OCV_NO_INT_LATCHED 0x1: GOOD_OCV_INTERRUPT_LATCHED
1	ENTER_CV_STATE_INT_LATCHED_S TS	0x0: ENTER_CV_STATE_NO_INT_LATCHED 0x1: ENTER_CV_STATE_INTERRUPT_LATCHED
0	LEAVE_CV_STATE_INT_LATCHED_S TS	0x0: LEAVE_OCV_STATE_NO_INT_LATCHED 0x1: LEAVE_OCV_STATE_INTERRUPT_LATCHED

0x00004019 BMS_VM_INT_PENDING_STS

Type: R
Clock: pbus_wrclk
Reset State: 0x00
Reset Name: N/A

Debug: Pending is set if interrupt has been sent but not cleared.

BMS_VM_INT_PENDING_STS

Bits	Name	Description
5	FSM_STAT_CHG_INT_PENDING_STS	0x0: FSM_STAT_CHG_NO_INT_PENDING 0x1: FSM_STAT_CHG_INTERRUPT_PENDING
4	FIFO_UPDATE_DONE_INT_PEND-ING_STS	0x0: FIFO_UPDATE_DONE_NO_INT_PENDING 0x1: FIFO_UPDATE_DONE_INTERRUPT_PENDING
3	OCV_THR_INT_PENDING_STS	0x0: OCV_THR_NO_INT_PENDING 0x1: OCV_THR_INTERRUPT_PENDING
2	GOOD_OCV_INT_PENDING_STS	0x0: GOOD_OCV_NO_INT_PENDING 0x1: GOOD_OCV_INTERRUPT_PENDING
1	ENTER_CV_STATE_INT_PEND-ING_STS	0x0: ENTER_CV_STATE_NO_INT_PENDING 0x1: ENTER_CV_STATE_INTERRUPT_PENDING
0	LEAVE_CV_STATE_INT_PEND-ING_STS	0x0: LEAVE_OCV_STATE_NO_INT_PENDING 0x1: LEAVE_OCV_STATE_INTERRUPT_PENDING

0x0000401A BMS_VM_INT_MID_SEL

Type: RW
Clock: pbus_wrclk
Reset State: 0x00
Reset Name: PERPH_RB

Selects the MID that will receive the interrupt

BMS_VM_INT_MID_SEL

Bits	Name	Description
1:0	INT_MID_SEL	0x0: MID0 0x1: MID1 0x2: MID2 0x3: MID3

0x0000401B BMS_VM_INT_PRIORITY

Type: RW
Clock: pbus_wrclk
Reset State: 0x00
Reset Name: PERPH_RB

SR=0 A=1

BMS_VM_INT_PRIORITY

Bits	Name	Description
0	RFU	

0x00004040 BMS_VM_MODE_CTL

Type: RW
Clock: pbus_wrclk
Reset State: 0x0A
Reset Name: PERPH_RB

Settings Common to Input and Output

PMIC_LOCKED=SEC_ACCESS

BMS_VM_MODE_CTL

Bits	Name	Description
3	BMS_S2_MODE_EN	Enables BMS FSM to transition into S2 (CV Charging) mode during regular operation 0x0: BMS_S2_MODE_DISABLED 0x1: BMS_S2_MODE_ENABLED
2	FORCE_S2_MODE	Forces BMS FSM to stay in S2 mode (used in test cases and for debugging purposes) 0x0: FORCE_S2_MODE_DISABLED 0x1: FORCE_S2_MODE_ENABLED
1	BMS_S3_MODE_EN	Enables BMS FSM to transition into S3 (OCV) mode during regular operation 0x0: BMS_S3_MODE_DISABLED 0x1: BMS_S3_MODE_ENABLED
0	FORCE_S3_MODE	Forces BMS FSM to stay in S3 mode (used in test cases and for debugging purposes) 0x0: FORCE_S3_MODE_DISABLED 0x1: FORCE_S3_MODE_ENABLED

0x00004042 BMS_VM_DATA_CTL1

Type: RW
Clock: pbus_wrclk
Reset State: 0x00
Reset Name: PERPH_RB

PMIC_LOCKED=SEC_ACCESS

BMS_VM_DATA_CTL1

Bits	Name	Description
1	ACCUM_MANUAL_RESET	Force manual reset of Accumulator (Flush both data and accumulator count). 0=Both accumulator data and accumulator count resets automatically by reaching the software programmed count of VADC samples (0x5E and 0x5F) 1=Asynchronous reset by Software (test mode). Software must write this back to zero to allow further accumulation to proceed 0x0: ACCUM_RESET_BY_COUNT 0x1: ACCUM_ASYNC_RESET
0	MASTER_HOLD	Master HOLD control bit for accumulator data, accumulator count, FIFO data and count, OCV data 1 - All data/count register update/sampling/accumulation/averaging operations pertaining to BMS are suspended (not reset) until this bit is written back to zero; BMS FSM is still running 0 - Resume/Continue normal operation and register updates of the BMS controller 0x0: MASTER_HOLD_DISABLED 0x1: MASTER_HOLD_ENABLED

0x00004043 BMS_VM_DATA_CTL2

Type: W
Clock: pbus_wrclk
Reset State: 0x00
Reset Name: PERPH_RB

BMS_VM_DATA_CTL2

Bits	Name	Description
2	SD_FIFO_CNT_CLR	SW clear COUNT_OF_RESULTS_IN_FIFO_SD(0x09), the shadow fifo count will remain cleared until next time updated by HW 0x1: SD_FIFO_CNT_CLR 0x1: SD_FIFO_CNT_CLR

BMS_VM_DATA_CTL2 (cont.)

Bits	Name	Description
1	SD_ACCUM_DATA_CLR	SW clear ACCUM_DATA_SD(0x63, 0x64, 0x65), the shadow accumulation data will remain cleared until next time updated by HW 0x1: SD_ACCUM_DATA_CLR 0x1: SD_ACCUM_DATA_CLR
0	SD_ACCUM_CNT_CLR	SW clear ACCUM_CNT_SD(0x67), the shadow accumulation count will remain cleared until next time updated by HW 0x1: SD_ACCUM_CNT_CLR 0x1: SD_ACCUM_CNT_CLR

0x00004044 BMS_VM_S3_OCV_TOL_CTL

Type: RW
Clock: pbus_wrclk
Reset State: 0x02
Reset Name: PERPH_RB

BMS_VM_S3_OCV_TOL_CTL

Bits	Name	Description
7:0	S3_OCV_TOL	OCV detection error tolerance. LSB = 300uV. 0x0: OCV_TOL_0UV 0x1: OCV_TOL_300UV 0x2: OCV_TOL_600UV 0x3: OCV_TOL_900UV 0x4: OCV_TOL_1200UV 0x5: OCV_TOL_1500UV 0x6: OCV_TOL_1800UV 0x7: OCV_TOL_2100UV 0x8: OCV_TOL_2400UV 0x9: OCV_TOL_2700UV 0xA: OCV_TOL_3000UV 0xB: OCV_TOL_3300UV 0xC: OCV_TOL_3600UV 0xD: OCV_TOL_3900UV 0xE: OCV_TOL_4200UV 0xF: OCV_TOL_4500UV 0x10: OCV_TOL_4800UV 0x11: OCV_TOL_5100UV 0x12: OCV_TOL_5400UV 0x13: OCV_TOL_5700UV 0x14: OCV_TOL_6000UV

BMS_VM_S3_OCV_TOL_CTL (cont.)

Bits	Name	Description
		0x15: OCV_TOL_6300UV 0x16: OCV_TOL_6600UV 0x17: OCV_TOL_6900UV 0x18: OCV_TOL_7200UV 0x19: OCV_TOL_7500UV 0x1A: OCV_TOL_7800UV 0x1B: OCV_TOL_8100UV 0x1C: OCV_TOL_8400UV 0x1D: OCV_TOL_8700UV 0x1E: OCV_TOL_9000UV 0x1F: OCV_TOL_9300UV 0x20: OCV_TOL_9600UV 0x21: OCV_TOL_9900UV 0x22: OCV_TOL_10200UV 0x23: OCV_TOL_10500UV 0x24: OCV_TOL_10800UV 0x25: OCV_TOL_11100UV 0x26: OCV_TOL_11400UV 0x27: OCV_TOL_11700UV 0x27: OCV_TOL_11700UV 0x28: OCV_TOL_12000UV 0x29: OCV_TOL_12300UV 0x2A: OCV_TOL_12600UV 0x2B: OCV_TOL_12900UV

BMS_VM_S3_OCV_TOL_CTL (cont.)

Bits	Name	Description
		0x2C: OCV_TOL_13200UV 0x2D: OCV_TOL_13500UV 0x2E: OCV_TOL_13800UV 0x2F: OCV_TOL_14100UV 0x30: OCV_TOL_14400UV 0x31: OCV_TOL_14700UV 0x32: OCV_TOL_15000UV 0x33: OCV_TOL_15300UV 0x34: OCV_TOL_15600UV 0x35: OCV_TOL_15900UV 0x36: OCV_TOL_16200UV 0x37: OCV_TOL_16500UV 0x38: OCV_TOL_16800UV 0x39: OCV_TOL_17100UV 0x3A: OCV_TOL_17400UV 0x3B: OCV_TOL_17700UV 0x3C: OCV_TOL_18000UV 0x3D: OCV_TOL_18300UV 0x3E: OCV_TOL_18600UV 0x3F: OCV_TOL_18900UV 0x40: OCV_TOL_19200UV 0x41: OCV_TOL_19500UV 0x42: OCV_TOL_19800UV 0x43: OCV_TOL_20100UV 0x44: OCV_TOL_20400UV 0x45: OCV_TOL_20700UV 0x46: OCV_TOL_21000UV 0x47: OCV_TOL_21300UV 0x48: OCV_TOL_21600UV 0x49: OCV_TOL_21900UV 0x4A: OCV_TOL_22200UV 0x4B: OCV_TOL_22500UV 0x4C: OCV_TOL_22800UV 0x4D: OCV_TOL_23100UV 0x4E: OCV_TOL_23400UV 0x4F: OCV_TOL_23700UV 0x50: OCV_TOL_24000UV 0x51: OCV_TOL_24300UV 0x52: OCV_TOL_24600UV 0x53: OCV_TOL_24900UV 0x54: OCV_TOL_25200UV 0x55: OCV_TOL_25500UV 0x56: OCV_TOL_25800UV 0x57: OCV_TOL_26100UV 0x58: OCV_TOL_26400UV 0x59: OCV_TOL_26700UV

BMS_VM_S3_OCV_TOL_CTL (cont.)

Bits	Name	Description
		0x5A: OCV_TOL_27000UV 0x5B: OCV_TOL_27300UV 0x5C: OCV_TOL_27600UV 0x5D: OCV_TOL_27900UV 0x5E: OCV_TOL_28200UV 0x5F: OCV_TOL_28500UV 0x60: OCV_TOL_28800UV 0x61: OCV_TOL_29100UV 0x62: OCV_TOL_29400UV 0x63: OCV_TOL_29700UV 0x64: OCV_TOL_30000UV 0x65: OCV_TOL_30300UV 0x66: OCV_TOL_30600UV 0x67: OCV_TOL_30900UV 0x68: OCV_TOL_31200UV 0x69: OCV_TOL_31500UV 0x6A: OCV_TOL_31800UV 0x6B: OCV_TOL_32100UV 0x6C: OCV_TOL_32400UV 0x6D: OCV_TOL_32700UV 0x6E: OCV_TOL_33000UV 0x6F: OCV_TOL_33300UV 0x70: OCV_TOL_33600UV 0x71: OCV_TOL_33900UV 0x72: OCV_TOL_34200UV 0x73: OCV_TOL_34500UV 0x74: OCV_TOL_34800UV 0x75: OCV_TOL_35100UV 0x76: OCV_TOL_35400UV 0x77: OCV_TOL_35700UV 0x78: OCV_TOL_36000UV 0x79: OCV_TOL_36300UV 0x7A: OCV_TOL_36600UV 0x7B: OCV_TOL_36900UV 0x7C: OCV_TOL_37200UV 0x7D: OCV_TOL_37500UV 0x7E: OCV_TOL_37800UV 0x7F: OCV_TOL_38100UV 0x80: OCV_TOL_38400UV 0x81: OCV_TOL_38700UV 0x82: OCV_TOL_39000UV 0x83: OCV_TOL_39300UV 0x84: OCV_TOL_39600UV 0x85: OCV_TOL_39900UV 0x86: OCV_TOL_40200UV 0x87: OCV_TOL_40500UV

BMS_VM_S3_OCV_TOL_CTL (cont.)

Bits	Name	Description
		0x88: OCV_TOL_40800UV 0x89: OCV_TOL_41100UV 0x8A: OCV_TOL_41400UV 0x8B: OCV_TOL_41700UV 0x8C: OCV_TOL_42000UV 0x8D: OCV_TOL_42300UV 0x8E: OCV_TOL_42600UV 0x8F: OCV_TOL_42900UV 0x90: OCV_TOL_43200UV 0x91: OCV_TOL_43500UV 0x92: OCV_TOL_43800UV 0x93: OCV_TOL_44100UV 0x94: OCV_TOL_44400UV 0x95: OCV_TOL_44700UV 0x96: OCV_TOL_45000UV 0x97: OCV_TOL_45300UV 0x98: OCV_TOL_45600UV 0x99: OCV_TOL_45900UV 0x9A: OCV_TOL_46200UV 0x9B: OCV_TOL_46500UV 0x9C: OCV_TOL_46800UV 0x9D: OCV_TOL_47100UV 0x9E: OCV_TOL_47400UV 0x9F: OCV_TOL_47700UV 0xA0: OCV_TOL_48000UV 0xA1: OCV_TOL_48300UV 0xA2: OCV_TOL_48600UV 0xA3: OCV_TOL_48900UV 0xA4: OCV_TOL_49200UV 0xA5: OCV_TOL_49500UV 0xA6: OCV_TOL_49800UV 0xA7: OCV_TOL_50100UV 0xA8: OCV_TOL_50400UV 0xA9: OCV_TOL_50700UV 0xAA: OCV_TOL_51000UV 0xAB: OCV_TOL_51300UV 0xAC: OCV_TOL_51600UV 0xAD: OCV_TOL_51900UV 0xAE: OCV_TOL_52200UV 0xAF: OCV_TOL_52500UV 0xB0: OCV_TOL_52800UV 0xB1: OCV_TOL_53100UV 0xB2: OCV_TOL_53400UV 0xB4: OCV_TOL_54000UV 0xB5: OCV_TOL_54300UV

BMS_VM_S3_OCV_TOL_CTL (cont.)

Bits	Name	Description
		0xB6: OCV_TOL_54600UV 0xB7: OCV_TOL_54900UV 0xB8: OCV_TOL_55200UV 0xB9: OCV_TOL_55500UV 0xBA: OCV_TOL_55800UV 0xBB: OCV_TOL_56100UV 0xBC: OCV_TOL_56400UV 0xBD: OCV_TOL_56700UV 0xBE: OCV_TOL_57000UV 0xBF: OCV_TOL_57300UV 0xC0: OCV_TOL_57600UV 0xC1: OCV_TOL_57900UV 0xC2: OCV_TOL_58200UV 0xC3: OCV_TOL_58500UV 0xC4: OCV_TOL_58800UV 0xC5: OCV_TOL_59100UV 0xC6: OCV_TOL_59400UV 0xC7: OCV_TOL_59700UV 0xC8: OCV_TOL_60000UV 0xC9: OCV_TOL_60300UV 0xCA: OCV_TOL_60600UV 0xCB: OCV_TOL_60900UV 0xCC: OCV_TOL_61200UV 0xCD: OCV_TOL_61500UV 0xCE: OCV_TOL_61800UV 0xCF: OCV_TOL_62100UV 0xD0: OCV_TOL_62400UV 0xD1: OCV_TOL_62700UV 0xD2: OCV_TOL_63000UV 0xD6: OCV_TOL_64200UV 0xD7: OCV_TOL_64500UV 0xD8: OCV_TOL_64800UV 0xD9: OCV_TOL_65100UV 0xDA: OCV_TOL_65400UV 0xDB: OCV_TOL_65700UV 0xDC: OCV_TOL_66000UV 0xDD: OCV_TOL_66300UV 0xDE: OCV_TOL_66600UV 0xDF: OCV_TOL_66900UV 0xE0: OCV_TOL_67200UV 0xE1: OCV_TOL_67500UV 0xE2: OCV_TOL_67800UV 0xE3: OCV_TOL_68100UV 0xE4: OCV_TOL_68400UV 0xE5: OCV_TOL_68700UV

BMS_VM_S3_OCV_TOL_CTL (cont.)

Bits	Name	Description
		0xE6: OCV_TOL_69000UV 0xE7: OCV_TOL_69300UV 0xE8: OCV_TOL_69600UV 0xE9: OCV_TOL_69900UV 0xEA: OCV_TOL_70200UV 0xEB: OCV_TOL_70500UV 0xEC: OCV_TOL_70800UV 0xED: OCV_TOL_71100UV 0xEE: OCV_TOL_71400UV 0xEF: OCV_TOL_71700UV 0xF0: OCV_TOL_72000UV 0xF1: OCV_TOL_72300UV 0xF2: OCV_TOL_72600UV 0xF3: OCV_TOL_72900UV 0xF4: OCV_TOL_73200UV 0xF5: OCV_TOL_73500UV 0xF6: OCV_TOL_73800UV 0xF7: OCV_TOL_74100UV 0xF8: OCV_TOL_74400UV 0xF9: OCV_TOL_74700UV 0xFA: OCV_TOL_75000UV 0xFB: OCV_TOL_75300UV 0xFC: OCV_TOL_75600UV 0xFC: OCV_TOL_75600UV 0xFD: OCV_TOL_75900UV 0xFE: OCV_TOL_76200UV 0xFF: OCV_TOL_76500UV

0x00004046 BMS_VM_EN_CTL

Type: RW
Clock: pbus_wrclk
Reset State: 0x00
Reset Name: PERPH_RB

BMS_VM_EN_CTL

Bits	Name	Description
7	BMS_EN	Enables BMS module. When this bit is HIGH the module requests a 32 kHz clock for autonomous or override operations. 0x0: BMS_DISABLED 0x1: BMS_ENABLED

0x00004047 BMS_VM_FIFO_LENGTH_CTL

Type: RW
Clock: pbus_wrclk
Reset State: 0x55
Reset Name: PERPH_RB

BMS_VM_FIFO_LENGTH_CTL

Bits	Name	Description
7:4	S2_FIFO_LENGTH_SET-TING	Defines a user setting of how many FIFO buffers need to be populated before raising an interrupt in the S2 state. This effectively is an indirect way to specify the time interval between two SOC evaluations by software in the S2 state value '0'/'9'/any value above '9' is not allowed 0x1: FIFO_LENGTH_1 0x2: FIFO_LENGTH_2 0x3: FIFO_LENGTH_3 0x4: FIFO_LENGTH_4 0x5: FIFO_LENGTH_5 0x6: FIFO_LENGTH_6 0x7: FIFO_LENGTH_7 0x8: FIFO_LENGTH_8
3:0	S1_FIFO_LENGTH_SET-TING	Defines a user setting of how many FIFO buffers need to be populated before raising an interrupt in the S1 state. This effectively is an indirect way to specify the time interval between two SOC evaluations by software in the S1 state value '0'/'9'/any value above '9' is not allowed 0x1: FIFO_LENGTH_1 0x2: FIFO_LENGTH_2 0x3: FIFO_LENGTH_3 0x4: FIFO_LENGTH_4 0x5: FIFO_LENGTH_5 0x6: FIFO_LENGTH_6 0x7: FIFO_LENGTH_7 0x8: FIFO_LENGTH_8

0x00004050 BMS_VM_OCV_THR0

Type: RW
Clock: pbus_wrclk
Reset State: 0x00
Reset Name: PERPH_RB

BMS_VM_OCV_THR0

Bits	Name	Description
7:0	OCV_THR_7_0	LSB of the threshold setting for the OCV_THR signal, which will assert an interrupt when OCV measurement is below selected settable threshold. 0x0: OCV_THR_LSB_0UV 0x1: OCV_THR_LSB_300UV 0x2: OCV_THR_LSB_600UV 0x3: OCV_THR_LSB_900UV 0x4: OCV_THR_LSB_1200UV 0x5: OCV_THR_LSB_1500UV 0x6: OCV_THR_LSB_1800UV 0x7: OCV_THR_LSB_2100UV 0x8: OCV_THR_LSB_2400UV 0x9: OCV_THR_LSB_2700UV 0xA: OCV_THR_LSB_3000UV 0xB: OCV_THR_LSB_3300UV 0xC: OCV_THR_LSB_3600UV 0xD: OCV_THR_LSB_3900UV 0xE: OCV_THR_LSB_4200UV 0xF: OCV_THR_LSB_4500UV 0x10: OCV_THR_LSB_4800UV 0x11: OCV_THR_LSB_5100UV 0x12: OCV_THR_LSB_5400UV 0x13: OCV_THR_LSB_5700UV 0x14: OCV_THR_LSB_6000UV 0x15: OCV_THR_LSB_6300UV 0x16: OCV_THR_LSB_6600UV 0x17: OCV_THR_LSB_6900UV 0x18: OCV_THR_LSB_7200UV 0x19: OCV_THR_LSB_7500UV 0x1A: OCV_THR_LSB_7800UV 0x1B: OCV_THR_LSB_8100UV 0x1C: OCV_THR_LSB_8400UV 0x1D: OCV_THR_LSB_8700UV 0x1E: OCV_THR_LSB_9000UV 0x1F: OCV_THR_LSB_9300UV 0x20: OCV_THR_LSB_9600UV 0x21: OCV_THR_LSB_9900UV 0x22: OCV_THR_LSB_10200UV 0x24: OCV_THR_LSB_10800UV 0x25: OCV_THR_LSB_11100UV 0x26: OCV_THR_LSB_11400UV 0x27: OCV_THR_LSB_11700UV

BMS_VM_OCV_THR0 (cont.)

Bits	Name	Description
		0x28: OCV_THR_LSB_12000UV 0x29: OCV_THR_LSB_12300UV 0x2A: OCV_THR_LSB_12600UV 0x2E: OCV_THR_LSB_13800UV 0x2B: OCV_THR_LSB_12900UV 0x2D: OCV_THR_LSB_13500UV 0x2D: OCV_THR_LSB_13500UV 0x2F: OCV_THR_LSB_14100UV 0x30: OCV_THR_LSB_14400UV 0x31: OCV_THR_LSB_14700UV 0x32: OCV_THR_LSB_15000UV 0x33: OCV_THR_LSB_15300UV 0x34: OCV_THR_LSB_15600UV 0x35: OCV_THR_LSB_15900UV 0x36: OCV_THR_LSB_16200UV 0x37: OCV_THR_LSB_16500UV 0x38: OCV_THR_LSB_16800UV 0x39: OCV_THR_LSB_17100UV 0x3A: OCV_THR_LSB_17400UV 0x3B: OCV_THR_LSB_17700UV 0x3C: OCV_THR_LSB_18000UV 0x3D: OCV_THR_LSB_18300UV 0x3E: OCV_THR_LSB_18600UV 0x3F: OCV_THR_LSB_18900UV 0x40: OCV_THR_LSB_19200UV 0x41: OCV_THR_LSB_19500UV 0x42: OCV_THR_LSB_19800UV 0x43: OCV_THR_LSB_20100UV 0x44: OCV_THR_LSB_20400UV 0x45: OCV_THR_LSB_20700UV 0x46: OCV_THR_LSB_21000UV 0x47: OCV_THR_LSB_21300UV 0x48: OCV_THR_LSB_21600UV 0x49: OCV_THR_LSB_21900UV 0x4A: OCV_THR_LSB_22200UV 0x4B: OCV_THR_LSB_22500UV 0x4C: OCV_THR_LSB_22800UV 0x4D: OCV_THR_LSB_23100UV 0x4E: OCV_THR_LSB_23400UV 0x4F: OCV_THR_LSB_23700UV 0x50: OCV_THR_LSB_24000UV 0x51: OCV_THR_LSB_24300UV 0x52: OCV_THR_LSB_24600UV 0x53: OCV_THR_LSB_24900UV 0x54: OCV_THR_LSB_25200UV 0x55: OCV_THR_LSB_25500UV

BMS_VM_OCV_THR0 (cont.)

Bits	Name	Description
		0x56: OCV_THR_LSB_25800UV 0x57: OCV_THR_LSB_26100UV 0x58: OCV_THR_LSB_26400UV 0x59: OCV_THR_LSB_26700UV 0x5A: OCV_THR_LSB_27000UV 0x5B: OCV_THR_LSB_27300UV 0x5C: OCV_THR_LSB_27600UV 0x5D: OCV_THR_LSB_27900UV 0x5E: OCV_THR_LSB_28200UV 0x5F: OCV_THR_LSB_28500UV 0x60: OCV_THR_LSB_28800UV 0x61: OCV_THR_LSB_29100UV 0x62: OCV_THR_LSB_29400UV 0x63: OCV_THR_LSB_29700UV 0x64: OCV_THR_LSB_30000UV 0x65: OCV_THR_LSB_30300UV 0x66: OCV_THR_LSB_30600UV 0x67: OCV_THR_LSB_30900UV 0x68: OCV_THR_LSB_31200UV 0x69: OCV_THR_LSB_31500UV 0x6A: OCV_THR_LSB_31800UV 0x6B: OCV_THR_LSB_32100UV 0x6C: OCV_THR_LSB_32400UV

BMS_VM_OCV_THR0 (cont.)

Bits	Name	Description
		0x6D: OCV_THR_LSB_32700UV 0x6D: OCV_THR_LSB_32700UV 0x6E: OCV_THR_LSB_33000UV 0x6F: OCV_THR_LSB_33300UV 0x70: OCV_THR_LSB_33600UV 0x71: OCV_THR_LSB_33900UV 0x72: OCV_THR_LSB_34200UV 0x73: OCV_THR_LSB_34500UV 0x74: OCV_THR_LSB_34800UV 0x75: OCV_THR_LSB_35100UV 0x76: OCV_THR_LSB_35400UV 0x77: OCV_THR_LSB_35700UV 0x78: OCV_THR_LSB_36000UV 0x79: OCV_THR_LSB_36300UV 0x7A: OCV_THR_LSB_36600UV 0x7B: OCV_THR_LSB_36900UV 0x7C: OCV_THR_LSB_37200UV 0x7D: OCV_THR_LSB_37500UV 0x7E: OCV_THR_LSB_37800UV 0x7F: OCV_THR_LSB_38100UV 0x80: OCV_THR_LSB_38400UV 0x81: OCV_THR_LSB_38700UV 0x82: OCV_THR_LSB_39000UV 0x83: OCV_THR_LSB_39300UV

BMS_VM_OCV_THR0 (cont.)

Bits	Name	Description
		0x84: OCV_THR_LSB_39600UV 0x85: OCV_THR_LSB_39900UV 0x86: OCV_THR_LSB_40200UV 0x87: OCV_THR_LSB_40500UV 0x88: OCV_THR_LSB_40800UV 0x89: OCV_THR_LSB_41100UV 0x8A: OCV_THR_LSB_41400UV 0x8B: OCV_THR_LSB_41700UV 0x8C: OCV_THR_LSB_42000UV 0x8D: OCV_THR_LSB_42300UV 0x8E: OCV_THR_LSB_42600UV 0x8F: OCV_THR_LSB_42900UV 0x90: OCV_THR_LSB_43200UV 0x91: OCV_THR_LSB_43500UV 0x92: OCV_THR_LSB_43800UV 0x93: OCV_THR_LSB_44100UV 0x94: OCV_THR_LSB_44400UV 0x95: OCV_THR_LSB_44700UV 0x96: OCV_THR_LSB_45000UV 0x97: OCV_THR_LSB_45300UV 0x98: OCV_THR_LSB_45600UV 0x99: OCV_THR_LSB_45900UV 0x9A: OCV_THR_LSB_46200UV 0x9B: OCV_THR_LSB_46500UV 0x9C: OCV_THR_LSB_46800UV 0x9D: OCV_THR_LSB_47100UV 0x9E: OCV_THR_LSB_47400UV 0x9F: OCV_THR_LSB_47700UV 0xA0: OCV_THR_LSB_48000UV 0xA1: OCV_THR_LSB_48300UV 0xA2: OCV_THR_LSB_48600UV 0xA3: OCV_THR_LSB_48900UV 0xA4: OCV_THR_LSB_49200UV 0xA5: OCV_THR_LSB_49500UV 0xA6: OCV_THR_LSB_49800UV 0xA7: OCV_THR_LSB_50100UV 0xA8: OCV_THR_LSB_50400UV 0xA9: OCV_THR_LSB_50700UV 0xAA: OCV_THR_LSB_51000UV 0xAB: OCV_THR_LSB_51300UV 0xAC: OCV_THR_LSB_51600UV 0xAD: OCV_THR_LSB_51900UV 0xAE: OCV_THR_LSB_52200UV 0xAF: OCV_THR_LSB_52500UV 0xB0: OCV_THR_LSB_52800UV 0xB1: OCV_THR_LSB_53100UV

BMS_VM_OCV_THR0 (cont.)

Bits	Name	Description
		0xB2: OCV_THR_LSB_53400UV 0xB3: OCV_THR_LSB_53700UV 0xB4: OCV_THR_LSB_54000UV 0xB5: OCV_THR_LSB_54300UV 0xB6: OCV_THR_LSB_54600UV 0xB7: OCV_THR_LSB_54900UV 0xB8: OCV_THR_LSB_55200UV 0xB9: OCV_THR_LSB_55500UV 0xBA: OCV_THR_LSB_55800UV 0xBB: OCV_THR_LSB_56100UV 0xBC: OCV_THR_LSB_56400UV 0xBD: OCV_THR_LSB_56700UV 0xBE: OCV_THR_LSB_57000UV 0xBF: OCV_THR_LSB_57300UV 0xC0: OCV_THR_LSB_57600UV 0xC1: OCV_THR_LSB_57900UV 0xC2: OCV_THR_LSB_58200UV 0xC3: OCV_THR_LSB_58500UV 0xC4: OCV_THR_LSB_58800UV 0xC5: OCV_THR_LSB_59100UV 0xC6: OCV_THR_LSB_59400UV 0xC7: OCV_THR_LSB_59700UV 0xC8: OCV_THR_LSB_60000U 0xC9: OCV_THR_LSB_60300UV 0xCA: OCV_THR_LSB_60600UV 0xCB: OCV_THR_LSB_60900UV 0xCC: OCV_THR_LSB_61200UV 0xCD: OCV_THR_LSB_61500UV 0xCE: OCV_THR_LSB_61800UV 0xCF: OCV_THR_LSB_62100UV 0xD0: OCV_THR_LSB_62400UV 0xD1: OCV_THR_LSB_62700UV 0xD2: OCV_THR_LSB_63000UV 0xD3: OCV_THR_LSB_63300UV 0xD4: OCV_THR_LSB_63600UV 0xD5: OCV_THR_LSB_63900UV 0xD6: OCV_THR_LSB_64200UV 0xD7: OCV_THR_LSB_64500UV 0xD8: OCV_THR_LSB_64800UV 0xD9: OCV_THR_LSB_65100UV 0xDA: OCV_THR_LSB_65400UV 0xDB: OCV_THR_LSB_65700UV 0xDC: OCV_THR_LSB_66000UV 0xDD: OCV_THR_LSB_66300UV 0xDE: OCV_THR_LSB_66600UV 0xDF: OCV_THR_LSB_66900UV

BMS_VM_OCV_THR0 (cont.)

Bits	Name	Description
		0xE0: OCV_THR_LSB_67200UV 0xE1: OCV_THR_LSB_67500UV 0xE2: OCV_THR_LSB_67800UV 0xE3: OCV_THR_LSB_68100UV 0xE4: OCV_THR_LSB_68400UV 0xE5: OCV_THR_LSB_68700UV 0xE6: OCV_THR_LSB_69000UV 0xE7: OCV_THR_LSB_69300UV 0xE8: OCV_THR_LSB_69600UV 0xE9: OCV_THR_LSB_69900UV 0xEA: OCV_THR_LSB_70200UV 0xEB: OCV_THR_LSB_70500UV 0xEC: OCV_THR_LSB_70800UV 0xED: OCV_THR_LSB_71100UV 0xEE: OCV_THR_LSB_71400UV 0xEF: OCV_THR_LSB_71700UV 0xF0: OCV_THR_LSB_72000UV 0xF1: OCV_THR_LSB_72300UV 0xF2: OCV_THR_LSB_72600UV 0xF3: OCV_THR_LSB_72900UV 0xF4: OCV_THR_LSB_73200UV 0xF5: OCV_THR_LSB_73500UV 0xF6: OCV_THR_LSB_73800UV 0xF7: OCV_THR_LSB_74100UV 0xF8: OCV_THR_LSB_74400UV 0xF9: OCV_THR_LSB_74700UV 0xFA: OCV_THR_LSB_75000UV 0xFB: OCV_THR_LSB_75300UV 0xFC: OCV_THR_LSB_75600UV 0xFD: OCV_THR_LSB_75900UV 0xFE: OCV_THR_LSB_76200UV 0xFF: OCV_THR_LSB_76500UV

0x00004051 BMS_VM_OCV_THR1

Type: RW
Clock: pbus_wrclk
Reset State: 0x00
Reset Name: PERPH_RB

BMS_VM_OCV_THR1

Bits	Name	Description
7:0	OCV_THR_15_8	MSB of the threshold setting for the OCV_THR signal, which will assert an interrupt when an OCV measurement is below selected settable threshold. 0x0: OCV_THR_MSB_0UV 0x1: OCV_THR_MSB_76800UV 0x2: OCV_THR_MSB_153600UV 0x3: OCV_THR_MSB_230400UV 0x4: OCV_THR_MSB_307200UV 0x5: OCV_THR_MSB_384000UV 0x6: OCV_THR_MSB_460800UV 0x7: OCV_THR_MSB_537600UV 0x8: OCV_THR_MSB_614400UV 0x9: OCV_THR_MSB_691200UV 0xA: OCV_THR_MSB_768000UV 0xB: OCV_THR_MSB_844800UV 0xC: OCV_THR_MSB_921600UV 0xD: OCV_THR_MSB_998400UV 0xE: OCV_THR_MSB_1075200UV 0xF: OCV_THR_MSB_1152000UV 0x10: OCV_THR_MSB_1228800UV 0x11: OCV_THR_MSB_1305600UV 0x12: OCV_THR_MSB_1382400UV 0x13: OCV_THR_MSB_1459200UV

BMS_VM_OCV_THR1 (cont.)

Bits	Name	Description
		0x14: OCV_THR_MSB_1536000UV 0x15: OCV_THR_MSB_1612800UV 0x16: OCV_THR_MSB_1689600UV 0x17: OCV_THR_MSB_1766400UV 0x18: OCV_THR_MSB_1843200UV 0x19: OCV_THR_MSB_1920000UV 0x1A: OCV_THR_MSB_1996800UV 0x1B: OCV_THR_MSB_2073600UV 0x1C: OCV_THR_MSB_2150400UV 0x1D: OCV_THR_MSB_2227200UV 0x1E: OCV_THR_MSB_2304000UV 0x1F: OCV_THR_MSB_2380800UV 0x20: OCV_THR_MSB_2457600UV 0x21: OCV_THR_MSB_2534400UV 0x22: OCV_THR_MSB_2611200UV 0x23: OCV_THR_MSB_2688000UV 0x24: OCV_THR_MSB_2764800UV 0x25: OCV_THR_MSB_2841600UV 0x26: OCV_THR_MSB_2918400UV 0x27: OCV_THR_MSB_2995200UV 0x28: OCV_THR_MSB_3072000UV 0x29: OCV_THR_MSB_3148800UV 0x2A: OCV_THR_MSB_3225600UV 0x2B: OCV_THR_MSB_3302400UV 0x2C: OCV_THR_MSB_3379200UV 0x2D: OCV_THR_MSB_3456000UV 0x2E: OCV_THR_MSB_3532800UV 0x2F: OCV_THR_MSB_3609600UV 0x30: OCV_THR_MSB_3686400UV 0x31: OCV_THR_MSB_3763200UV 0x32: OCV_THR_MSB_3840000UV 0x33: OCV_THR_MSB_3916800UV 0x34: OCV_THR_MSB_3993600UV 0x35: OCV_THR_MSB_4070400UV 0x36: OCV_THR_MSB_4147200UV 0x37: OCV_THR_MSB_4224000UV 0x38: OCV_THR_MSB_4300800UV 0x39: OCV_THR_MSB_4377600UV 0x3A: OCV_THR_MSB_4454400UV 0x3B: OCV_THR_MSB_4531200UV 0x3C: OCV_THR_MSB_4608000UV 0x3D: OCV_THR_MSB_4684800UV 0x3E: OCV_THR_MSB_4761600UV 0x3F: OCV_THR_MSB_4838400UV 0x40: OCV_THR_MSB_4915200UV 0x41: OCV_THR_MSB_4992000UV

BMS_VM_OCV_THR1 (cont.)

Bits	Name	Description
		0x42: OCV_THR_MSB_5068800UV 0x43: OCV_THR_MSB_5145600UV 0x44: OCV_THR_MSB_5222400UV 0x45: OCV_THR_MSB_5299200UV 0x46: OCV_THR_MSB_5376000UV 0x47: OCV_THR_MSB_5452800UV 0x48: OCV_THR_MSB_5529600UV 0x49: OCV_THR_MSB_5606400UV 0x4A: OCV_THR_MSB_5683200UV 0x4B: OCV_THR_MSB_5760000UV 0x4C: OCV_THR_MSB_5836800UV 0x4D: OCV_THR_MSB_5913600UV 0x4E: OCV_THR_MSB_5990400UV 0x4F: OCV_THR_MSB_6067200UV 0x50: OCV_THR_MSB_6144000UV 0x51: OCV_THR_MSB_6220800UV 0x52: OCV_THR_MSB_6297600UV 0x53: OCV_THR_MSB_6374400UV 0x54: OCV_THR_MSB_6451200UV 0x55: OCV_THR_MSB_6528000UV 0x56: OCV_THR_MSB_6604800UV 0x57: OCV_THR_MSB_6681600UV 0x58: OCV_THR_MSB_6758400UV 0x59: OCV_THR_MSB_6835200UV 0x5A: OCV_THR_MSB_6912000UV 0x5B: OCV_THR_MSB_6988800UV 0x5C: OCV_THR_MSB_7065600UV 0x5D: OCV_THR_MSB_7142400UV 0x5E: OCV_THR_MSB_7219200UV 0x5F: OCV_THR_MSB_7296000UV 0x60: OCV_THR_MSB_7372800UV 0x61: OCV_THR_MSB_7449600UV 0x62: OCV_THR_MSB_7526400UV 0x63: OCV_THR_MSB_7603200UV 0x64: OCV_THR_MSB_7680000UV 0x65: OCV_THR_MSB_7756800UV 0x66: OCV_THR_MSB_7833600UV 0x67: OCV_THR_MSB_7910400UV 0x68: OCV_THR_MSB_7987200UV 0x69: OCV_THR_MSB_8064000UV 0x6A: OCV_THR_MSB_8140800UV 0x6B: OCV_THR_MSB_8217600UV 0x6C: OCV_THR_MSB_8294400UV 0x6D: OCV_THR_MSB_8371200UV 0x6E: OCV_THR_MSB_8448000UV 0x6F: OCV_THR_MSB_8524800UV

BMS_VM_OCV_THR1 (cont.)

Bits	Name	Description
		0x70: OCV_THR_MSB_8601600UV 0x71: OCV_THR_MSB_8678400UV 0x72: OCV_THR_MSB_8755200UV 0x73: OCV_THR_MSB_8832000UV 0x74: OCV_THR_MSB_8908800UV 0x75: OCV_THR_MSB_8985600UV 0x76: OCV_THR_MSB_9062400UV 0x77: OCV_THR_MSB_9139200UV 0x78: OCV_THR_MSB_9216000UV 0x79: OCV_THR_MSB_9292800UV 0x7A: OCV_THR_MSB_9369600UV 0x7B: OCV_THR_MSB_9446400UV 0x7C: OCV_THR_MSB_9523200UV 0x7D: OCV_THR_MSB_9600000UV 0x7E: OCV_THR_MSB_9676800UV 0x7F: OCV_THR_MSB_9753600UV 0x80: OCV_THR_MSB_9830400UV 0x81: OCV_THR_MSB_9907200UV 0x82: OCV_THR_MSB_9984000UV 0x83: OCV_THR_MSB_10060800UV 0x84: OCV_THR_MSB_10137600UV 0x85: OCV_THR_MSB_10214400UV 0x86: OCV_THR_MSB_10291200UV

BMS_VM_OCV_THR1 (cont.)

Bits	Name	Description
		0x87: OCV_THR_MSB_10368000UV 0x88: OCV_THR_MSB_10444800UV 0x89: OCV_THR_MSB_10521600UV 0x8A: OCV_THR_MSB_10598400UV 0x8B: OCV_THR_MSB_10675200UV 0x8C: OCV_THR_MSB_10752000UV 0x8D: OCV_THR_MSB_10828800UV 0x8E: OCV_THR_MSB_10905600UV 0x8F: OCV_THR_MSB_10982400UV 0x90: OCV_THR_MSB_11059200UV 0x91: OCV_THR_MSB_11136000UV 0x92: OCV_THR_MSB_11212800UV 0x93: OCV_THR_MSB_11289600UV 0x94: OCV_THR_MSB_11366400UV 0x95: OCV_THR_MSB_11443200UV 0x96: OCV_THR_MSB_11520000UV 0x97: OCV_THR_MSB_11596800UV 0x98: OCV_THR_MSB_11673600UV 0x99: OCV_THR_MSB_11750400UV 0x9A: OCV_THR_MSB_11827200UV 0x9B: OCV_THR_MSB_11904000UV 0x9C: OCV_THR_MSB_11980800UV 0x9D: OCV_THR_MSB_12057600UV 0x9E: OCV_THR_MSB_12134400UV 0x9F: OCV_THR_MSB_12211200UV 0xA0: OCV_THR_MSB_12288000UV 0xA1: OCV_THR_MSB_12364800UV 0xA2: OCV_THR_MSB_12441600UV 0xA3: OCV_THR_MSB_12518400UV 0xA4: OCV_THR_MSB_12595200UV 0xA5: OCV_THR_MSB_12672000UV 0xA6: OCV_THR_MSB_12748800UV 0xA7: OCV_THR_MSB_12825600UV 0xA8: OCV_THR_MSB_12902400UV 0xA9: OCV_THR_MSB_12979200UV 0xAA: OCV_THR_MSB_13056000UV 0xAB: OCV_THR_MSB_13132800UV 0xAC: OCV_THR_MSB_13209600UV 0xAD: OCV_THR_MSB_13286400UV 0xAE: OCV_THR_MSB_13363200UV 0xAF: OCV_THR_MSB_13440000UV 0xB0: OCV_THR_MSB_13516800UV 0xB1: OCV_THR_MSB_13593600UV 0xB2: OCV_THR_MSB_13670400UV 0xB3: OCV_THR_MSB_13747200UV 0xB4: OCV_THR_MSB_13824000UV

BMS_VM_OCV_THR1 (cont.)

Bits	Name	Description
		0xB5: OCV_THR_MSB_13900800UV 0xB6: OCV_THR_MSB_13977600UV 0xB7: OCV_THR_MSB_14054400UV 0xB8: OCV_THR_MSB_14131200UV 0xB9: OCV_THR_MSB_14208000UV 0xBA: OCV_THR_MSB_14284800UV 0xBB: OCV_THR_MSB_14361600UV 0xBC: OCV_THR_MSB_14438400UV 0xBD: OCV_THR_MSB_14515200UV 0xBE: OCV_THR_MSB_14592000UV 0xBF: OCV_THR_MSB_14668800UV 0xC0: OCV_THR_MSB_14745600UV 0xC1: OCV_THR_MSB_14822400UV 0xC2: OCV_THR_MSB_14899200UV 0xC3: OCV_THR_MSB_14976000UV 0xC4: OCV_THR_MSB_15052800UV 0xC5: OCV_THR_MSB_15129600UV 0xC6: OCV_THR_MSB_15206400UV 0xC7: OCV_THR_MSB_15283200UV 0xC8: OCV_THR_MSB_15360000UV 0xC9: OCV_THR_MSB_15436800UV 0xCA: OCV_THR_MSB_15513600UV 0xCB: OCV_THR_MSB_15590400UV 0xCC: OCV_THR_MSB_15667200UV 0xCD: OCV_THR_MSB_15744000UV 0xCE: OCV_THR_MSB_15820800UV 0xCF: OCV_THR_MSB_15897600UV 0xD0: OCV_THR_MSB_15974400UV 0xD1: OCV_THR_MSB_16051200UV 0xD2: OCV_THR_MSB_16128000UV 0xD3: OCV_THR_MSB_16204800UV 0xD4: OCV_THR_MSB_16281600UV 0xD5: OCV_THR_MSB_16358400UV 0xD6: OCV_THR_MSB_16435200UV 0xD7: OCV_THR_MSB_16512000UV 0xD8: OCV_THR_MSB_16588800UV 0xD9: OCV_THR_MSB_16665600UV 0xDA: OCV_THR_MSB_16742400UV 0xDB: OCV_THR_MSB_16819200UV 0xDC: OCV_THR_MSB_16896000UV 0xDD: OCV_THR_MSB_16972800UV 0xDE: OCV_THR_MSB_17049600UV 0xDF: OCV_THR_MSB_17126400UV 0xE0: OCV_THR_MSB_17203200UV 0xE1: OCV_THR_MSB_17280000UV 0xE2: OCV_THR_MSB_17356800UV

BMS_VM_OCV_THR1 (cont.)

Bits	Name	Description
		0xE3: OCV_THR_MSB_17433600UV 0xE4: OCV_THR_MSB_17510400UV 0xE5: OCV_THR_MSB_17587200UV 0xE6: OCV_THR_MSB_17664000UV 0xE7: OCV_THR_MSB_17740800UV 0xE8: OCV_THR_MSB_17817600UV 0xE9: OCV_THR_MSB_17894400UV 0xEA: OCV_THR_MSB_17971200UV 0xEB: OCV_THR_MSB_18048000UV 0xEC: OCV_THR_MSB_18124800UV 0xED: OCV_THR_MSB_18201600UV 0xEE: OCV_THR_MSB_18278400UV 0xEF: OCV_THR_MSB_18355200UV 0xF0: OCV_THR_MSB_18432000UV 0xF1: OCV_THR_MSB_18508800UV 0xF2: OCV_THR_MSB_18585600UV 0xF3: OCV_THR_MSB_18662400UV 0xF4: OCV_THR_MSB_18739200UV 0xF5: OCV_THR_MSB_18816000UV 0xF6: OCV_THR_MSB_18892800UV 0xF7: OCV_THR_MSB_18969600UV 0xF8: OCV_THR_MSB_19046400UV 0xF9: OCV_THR_MSB_19123200UV 0xFA: OCV_THR_MSB_19200000UV 0xFB: OCV_THR_MSB_19276800UV 0xFC: OCV_THR_MSB_19353600UV 0xFD: OCV_THR_MSB_19430400UV 0xFE: OCV_THR_MSB_19507200UV 0xFF: OCV_THR_MSB_19584000UV

0x00004053 BMS_VM_OCV_THR_CTL

Type: RW
Clock: pbus_wrclk
Reset State: 0x00
Reset Name: PERPH_RB

BMS_VM_OCV_THR_CTL

Bits	Name	Description
7	OCV_THR_EN	Enables the OCV_THR interrupt signal, which will assert when an OCV measurement is below selected settable threshold. This signal is intended for use where software requires interrupts based on SoC levels. 0x0: OCV_THR_DISABLED 0x1: OCV_THR_ENABLED

0x00004055 BMS_VM_S1_SAMPLE_INTERVAL_CTL

Type: RW
Clock: pbus_wrclk
Reset State: 0x0A
Reset Name: PERPH_RB

BMS_VM_S1_SAMPLE_INTERVAL_CTL

Bits	Name	Description
7:0	SAMPLE_INTERVAL_NORMAL_STATE	Sample delay (10*value) in ms in between measurements normal state (S1). This is basically the sampling interval (ts) of the VADC measurments 0x0: SAMPLE_INTERVAL_NORMAL_0MS 0x1: SAMPLE_INTERVAL_NORMAL_10MS 0x2: SAMPLE_INTERVAL_NORMAL_20MS 0x3: SAMPLE_INTERVAL_NORMAL_30MS 0x4: SAMPLE_INTERVAL_NORMAL_40MS 0x5: SAMPLE_INTERVAL_NORMAL_50MS 0x6: SAMPLE_INTERVAL_NORMAL_60MS 0x7: SAMPLE_INTERVAL_NORMAL_70MS 0x8: SAMPLE_INTERVAL_NORMAL_80MS 0x9: SAMPLE_INTERVAL_NORMAL_90MS 0xA: SAMPLE_INTERVAL_NORMAL_100MS 0xB: SAMPLE_INTERVAL_NORMAL_110MS 0xC: SAMPLE_INTERVAL_NORMAL_120MS 0xD: SAMPLE_INTERVAL_NORMAL_130MS 0xE: SAMPLE_INTERVAL_NORMAL_140MS 0xF: SAMPLE_INTERVAL_NORMAL_150MS 0x10: SAMPLE_INTERVAL_NORMAL_160MS 0x11: SAMPLE_INTERVAL_NORMAL_170MS 0x12: SAMPLE_INTERVAL_NORMAL_180MS 0x13: SAMPLE_INTERVAL_NORMAL_190MS

BMS_VM_S1_SAMPLE_INTERVAL_CTL (cont.)

Bits	Name	Description
		0x14: SAMPLE_INTERVAL_NORMAL_200MS 0x15: SAMPLE_INTERVAL_NORMAL_210MS 0x16: SAMPLE_INTERVAL_NORMAL_220MS 0x17: SAMPLE_INTERVAL_NORMAL_230MS 0x18: SAMPLE_INTERVAL_NORMAL_240MS 0x19: SAMPLE_INTERVAL_NORMAL_250MS 0x1A: SAMPLE_INTERVAL_NORMAL_260MS 0x1B: SAMPLE_INTERVAL_NORMAL_270MS 0x1C: SAMPLE_INTERVAL_NORMAL_280MS 0x1D: SAMPLE_INTERVAL_NORMAL_290MS 0x1E: SAMPLE_INTERVAL_NORMAL_300MS 0x1F: SAMPLE_INTERVAL_NORMAL_310MS 0x20: SAMPLE_INTERVAL_NORMAL_320MS 0x21: SAMPLE_INTERVAL_NORMAL_330MS 0x22: SAMPLE_INTERVAL_NORMAL_340MS 0x23: SAMPLE_INTERVAL_NORMAL_350MS 0x24: SAMPLE_INTERVAL_NORMAL_360MS 0x25: SAMPLE_INTERVAL_NORMAL_370MS 0x26: SAMPLE_INTERVAL_NORMAL_380MS 0x27: SAMPLE_INTERVAL_NORMAL_390MS 0x28: SAMPLE_INTERVAL_NORMAL_400MS 0x29: SAMPLE_INTERVAL_NORMAL_410MS 0x2A: SAMPLE_INTERVAL_NORMAL_420MS 0x2B: SAMPLE_INTERVAL_NORMAL_430MS 0x2C: SAMPLE_INTERVAL_NORMAL_440MS 0x2D: SAMPLE_INTERVAL_NORMAL_450MS 0x2E: SAMPLE_INTERVAL_NORMAL_460MS 0x2F: SAMPLE_INTERVAL_NORMAL_470MS 0x30: SAMPLE_INTERVAL_NORMAL_480MS 0x31: SAMPLE_INTERVAL_NORMAL_490MS 0x32: SAMPLE_INTERVAL_NORMAL_500MS 0x33: SAMPLE_INTERVAL_NORMAL_510MS 0x34: SAMPLE_INTERVAL_NORMAL_520MS 0x35: SAMPLE_INTERVAL_NORMAL_530MS 0x36: SAMPLE_INTERVAL_NORMAL_540MS 0x37: SAMPLE_INTERVAL_NORMAL_550MS 0x38: SAMPLE_INTERVAL_NORMAL_560MS 0x39: SAMPLE_INTERVAL_NORMAL_570MS 0x3A: SAMPLE_INTERVAL_NORMAL_580MS 0x3B: SAMPLE_INTERVAL_NORMAL_590MS 0x3C: SAMPLE_INTERVAL_NORMAL_600MS 0x3D: SAMPLE_INTERVAL_NORMAL_610MS 0x3E: SAMPLE_INTERVAL_NORMAL_620MS 0x3F: SAMPLE_INTERVAL_NORMAL_630MS 0x40: SAMPLE_INTERVAL_NORMAL_640MS 0x41: SAMPLE_INTERVAL_NORMAL_650MS

BMS_VM_S1_SAMPLE_INTERVAL_CTL (cont.)

Bits	Name	Description
		0x42: SAMPLE_INTERVAL_NORMAL_660MS 0x43: SAMPLE_INTERVAL_NORMAL_670MS 0x44: SAMPLE_INTERVAL_NORMAL_680MS 0x45: SAMPLE_INTERVAL_NORMAL_690MS 0x46: SAMPLE_INTERVAL_NORMAL_700MS 0x47: SAMPLE_INTERVAL_NORMAL_710MS 0x48: SAMPLE_INTERVAL_NORMAL_720MS 0x49: SAMPLE_INTERVAL_NORMAL_730MS 0x4A: SAMPLE_INTERVAL_NORMAL_740MS 0x4B: SAMPLE_INTERVAL_NORMAL_750MS 0x4C: SAMPLE_INTERVAL_NORMAL_760MS 0x4D: SAMPLE_INTERVAL_NORMAL_770MS 0x4E: SAMPLE_INTERVAL_NORMAL_780MS 0x4F: SAMPLE_INTERVAL_NORMAL_790MS 0x50: SAMPLE_INTERVAL_NORMAL_800MS 0x51: SAMPLE_INTERVAL_NORMAL_810MS 0x52: SAMPLE_INTERVAL_NORMAL_820MS 0x53: SAMPLE_INTERVAL_NORMAL_830MS 0x54: SAMPLE_INTERVAL_NORMAL_840MS 0x55: SAMPLE_INTERVAL_NORMAL_850MS 0x56: SAMPLE_INTERVAL_NORMAL_860MS 0x57: SAMPLE_INTERVAL_NORMAL_870MS 0x58: SAMPLE_INTERVAL_NORMAL_880MS
		0x59: SAMPLE_INTERVAL_NORMAL_890MS 0x5A: SAMPLE_INTERVAL_NORMAL_900MS 0x5B: SAMPLE_INTERVAL_NORMAL_910MS 0x5C: SAMPLE_INTERVAL_NORMAL_920MS 0x5D: SAMPLE_INTERVAL_NORMAL_930MS 0x5E: SAMPLE_INTERVAL_NORMAL_940MS 0x5F: SAMPLE_INTERVAL_NORMAL_950MS 0x60: SAMPLE_INTERVAL_NORMAL_960MS 0x61: SAMPLE_INTERVAL_NORMAL_970MS 0x62: SAMPLE_INTERVAL_NORMAL_980MS 0x63: SAMPLE_INTERVAL_NORMAL_990MS 0x64: SAMPLE_INTERVAL_NORMAL_1000MS 0x65: SAMPLE_INTERVAL_NORMAL_1010MS 0x66: SAMPLE_INTERVAL_NORMAL_1020MS 0x67: SAMPLE_INTERVAL_NORMAL_1030MS 0x68: SAMPLE_INTERVAL_NORMAL_1040MS 0x69: SAMPLE_INTERVAL_NORMAL_1050MS 0x6A: SAMPLE_INTERVAL_NORMAL_1060MS 0x6B: SAMPLE_INTERVAL_NORMAL_1070MS 0x6C: SAMPLE_INTERVAL_NORMAL_1080MS 0x6D: SAMPLE_INTERVAL_NORMAL_1090MS 0x6E: SAMPLE_INTERVAL_NORMAL_1100MS 0x6F: SAMPLE_INTERVAL_NORMAL_1110MS

BMS_VM_S1_SAMPLE_INTERVAL_CTL (cont.)

Bits	Name	Description
		0x70: SAMPLE_INTERVAL_NORMAL_1120MS 0x71: SAMPLE_INTERVAL_NORMAL_1130MS 0x72: SAMPLE_INTERVAL_NORMAL_1140MS 0x73: SAMPLE_INTERVAL_NORMAL_1150MS 0x74: SAMPLE_INTERVAL_NORMAL_1160MS 0x75: SAMPLE_INTERVAL_NORMAL_1170MS 0x76: SAMPLE_INTERVAL_NORMAL_1180MS 0x77: SAMPLE_INTERVAL_NORMAL_1190MS 0x78: SAMPLE_INTERVAL_NORMAL_1200MS 0x79: SAMPLE_INTERVAL_NORMAL_1210MS 0x7A: SAMPLE_INTERVAL_NORMAL_1220MS 0x7B: SAMPLE_INTERVAL_NORMAL_1230MS 0x7C: SAMPLE_INTERVAL_NORMAL_1240MS 0x7D: SAMPLE_INTERVAL_NORMAL_1250MS 0x7E: SAMPLE_INTERVAL_NORMAL_1260MS 0x7F: SAMPLE_INTERVAL_NORMAL_1270MS 0x80: SAMPLE_INTERVAL_NORMAL_1280MS 0x81: SAMPLE_INTERVAL_NORMAL_1290MS 0x82: SAMPLE_INTERVAL_NORMAL_1300MS 0x83: SAMPLE_INTERVAL_NORMAL_1310MS 0x84: SAMPLE_INTERVAL_NORMAL_1320MS 0x85: SAMPLE_INTERVAL_NORMAL_1330MS 0x86: SAMPLE_INTERVAL_NORMAL_1340MS 0x87: SAMPLE_INTERVAL_NORMAL_1350MS 0x88: SAMPLE_INTERVAL_NORMAL_1360MS 0x89: SAMPLE_INTERVAL_NORMAL_1370MS 0x8A: SAMPLE_INTERVAL_NORMAL_1380MS 0x8B: SAMPLE_INTERVAL_NORMAL_1390MS 0x8C: SAMPLE_INTERVAL_NORMAL_1400MS 0x8D: SAMPLE_INTERVAL_NORMAL_1410MS 0x8E: SAMPLE_INTERVAL_NORMAL_1420MS 0x8F: SAMPLE_INTERVAL_NORMAL_1430MS 0x90: SAMPLE_INTERVAL_NORMAL_1440MS 0x91: SAMPLE_INTERVAL_NORMAL_1450MS 0x92: SAMPLE_INTERVAL_NORMAL_1460MS 0x93: SAMPLE_INTERVAL_NORMAL_1470MS 0x94: SAMPLE_INTERVAL_NORMAL_1480MS 0x95: SAMPLE_INTERVAL_NORMAL_1490MS 0x96: SAMPLE_INTERVAL_NORMAL_1500MS 0x97: SAMPLE_INTERVAL_NORMAL_1510MS 0x98: SAMPLE_INTERVAL_NORMAL_1520MS 0x99: SAMPLE_INTERVAL_NORMAL_1530MS 0x9A: SAMPLE_INTERVAL_NORMAL_1540MS 0x9B: SAMPLE_INTERVAL_NORMAL_1550MS 0x9C: SAMPLE_INTERVAL_NORMAL_1560MS 0x9D: SAMPLE_INTERVAL_NORMAL_1570MS

BMS_VM_S1_SAMPLE_INTERVAL_CTL (cont.)

Bits	Name	Description
		0x9E: SAMPLE_INTERVAL_NORMAL_1580MS 0x9F: SAMPLE_INTERVAL_NORMAL_1590MS 0xA0: SAMPLE_INTERVAL_NORMAL_1600MS 0xA1: SAMPLE_INTERVAL_NORMAL_1610MS 0xA2: SAMPLE_INTERVAL_NORMAL_1620MS 0xA3: SAMPLE_INTERVAL_NORMAL_1630MS 0xA4: SAMPLE_INTERVAL_NORMAL_1640MS 0xA5: SAMPLE_INTERVAL_NORMAL_1650MS 0xA6: SAMPLE_INTERVAL_NORMAL_1660MS 0xA7: SAMPLE_INTERVAL_NORMAL_1670MS 0xA8: SAMPLE_INTERVAL_NORMAL_1680MS 0xA9: SAMPLE_INTERVAL_NORMAL_1690MS 0xAA: SAMPLE_INTERVAL_NORMAL_1700MS 0xAB: SAMPLE_INTERVAL_NORMAL_1710MS 0xAC: SAMPLE_INTERVAL_NORMAL_1720MS 0xAD: SAMPLE_INTERVAL_NORMAL_1730MS 0xAE: SAMPLE_INTERVAL_NORMAL_1740MS 0xAF: SAMPLE_INTERVAL_NORMAL_1750MS 0xB0: SAMPLE_INTERVAL_NORMAL_1760MS 0xB1: SAMPLE_INTERVAL_NORMAL_1770MS 0xB2: SAMPLE_INTERVAL_NORMAL_1780MS 0xB3: SAMPLE_INTERVAL_NORMAL_1790MS 0xB4: SAMPLE_INTERVAL_NORMAL_1800MS
		0xB5: SAMPLE_INTERVAL_NORMAL_1810MS 0xB6: SAMPLE_INTERVAL_NORMAL_1820MS 0xB7: SAMPLE_INTERVAL_NORMAL_1830MS 0xB8: SAMPLE_INTERVAL_NORMAL_1840MS 0xB9: SAMPLE_INTERVAL_NORMAL_1850MS 0xBA: SAMPLE_INTERVAL_NORMAL_1860MS 0xBB: SAMPLE_INTERVAL_NORMAL_1870MS 0xBC: SAMPLE_INTERVAL_NORMAL_1880MS 0xBD: SAMPLE_INTERVAL_NORMAL_1890MS 0xBE: SAMPLE_INTERVAL_NORMAL_1900MS 0xBF: SAMPLE_INTERVAL_NORMAL_1910MS 0xC0: SAMPLE_INTERVAL_NORMAL_1920MS 0xC1: SAMPLE_INTERVAL_NORMAL_1930MS 0xC2: SAMPLE_INTERVAL_NORMAL_1940MS 0xC3: SAMPLE_INTERVAL_NORMAL_1950MS 0xC4: SAMPLE_INTERVAL_NORMAL_1960MS 0xC5: SAMPLE_INTERVAL_NORMAL_1970MS 0xC6: SAMPLE_INTERVAL_NORMAL_1980MS 0xC7: SAMPLE_INTERVAL_NORMAL_1990MS 0xC8: SAMPLE_INTERVAL_NORMAL_2000MS 0xC9: SAMPLE_INTERVAL_NORMAL_2010MS 0xCA: SAMPLE_INTERVAL_NORMAL_2020MS 0xCB: SAMPLE_INTERVAL_NORMAL_2030MS

BMS_VM_S1_SAMPLE_INTERVAL_CTL (cont.)

Bits	Name	Description
		0xCC: SAMPLE_INTERVAL_NORMAL_2040MS 0xCD: SAMPLE_INTERVAL_NORMAL_2050MS 0xCE: SAMPLE_INTERVAL_NORMAL_2060MS 0xCF: SAMPLE_INTERVAL_NORMAL_2070MS 0xD0: SAMPLE_INTERVAL_NORMAL_2080MS 0xD1: SAMPLE_INTERVAL_NORMAL_2090MS 0xD2: SAMPLE_INTERVAL_NORMAL_2100MS 0xD3: SAMPLE_INTERVAL_NORMAL_2110MS 0xD4: SAMPLE_INTERVAL_NORMAL_2120MS 0xD5: SAMPLE_INTERVAL_NORMAL_2130MS 0xD6: SAMPLE_INTERVAL_NORMAL_2140MS 0xD7: SAMPLE_INTERVAL_NORMAL_2150MS 0xD8: SAMPLE_INTERVAL_NORMAL_2160MS 0xD9: SAMPLE_INTERVAL_NORMAL_2170MS 0xDA: SAMPLE_INTERVAL_NORMAL_2180MS 0xDB: SAMPLE_INTERVAL_NORMAL_2190MS 0xDC: SAMPLE_INTERVAL_NORMAL_2200MS 0xDD: SAMPLE_INTERVAL_NORMAL_2210MS 0xDE: SAMPLE_INTERVAL_NORMAL_2220MS 0xDF: SAMPLE_INTERVAL_NORMAL_2230MS 0xE0: SAMPLE_INTERVAL_NORMAL_2240MS 0xE1: SAMPLE_INTERVAL_NORMAL_2250MS 0xE2: SAMPLE_INTERVAL_NORMAL_2260MS
		0xE3: SAMPLE_INTERVAL_NORMAL_2270MS 0xE4: SAMPLE_INTERVAL_NORMAL_2280MS 0xE5: SAMPLE_INTERVAL_NORMAL_2290MS 0xE6: SAMPLE_INTERVAL_NORMAL_2300MS 0xE7: SAMPLE_INTERVAL_NORMAL_2310MS 0xE8: SAMPLE_INTERVAL_NORMAL_2320MS 0xE9: SAMPLE_INTERVAL_NORMAL_2330MS 0xEA: SAMPLE_INTERVAL_NORMAL_2340MS 0xEB: SAMPLE_INTERVAL_NORMAL_2350MS 0xEC: SAMPLE_INTERVAL_NORMAL_2360MS 0xED: SAMPLE_INTERVAL_NORMAL_2370MS 0xEE: SAMPLE_INTERVAL_NORMAL_2380MS 0xEF: SAMPLE_INTERVAL_NORMAL_2390MS 0xF0: SAMPLE_INTERVAL_NORMAL_2400MS 0xF1: SAMPLE_INTERVAL_NORMAL_2410MS 0xF2: SAMPLE_INTERVAL_NORMAL_2420MS 0xF3: SAMPLE_INTERVAL_NORMAL_2430MS 0xF4: SAMPLE_INTERVAL_NORMAL_2440MS 0xF5: SAMPLE_INTERVAL_NORMAL_2450MS 0xF6: SAMPLE_INTERVAL_NORMAL_2460MS 0xF7: SAMPLE_INTERVAL_NORMAL_2470MS 0xF8: SAMPLE_INTERVAL_NORMAL_2480MS 0xF9: SAMPLE_INTERVAL_NORMAL_2490MS

BMS_VM_S1_SAMPLE_INTERVAL_CTL (cont.)

Bits	Name	Description
		0xFA: SAMPLE_INTERVAL_NORMAL_2500MS 0xFB: SAMPLE_INTERVAL_NORMAL_2510MS 0xFC: SAMPLE_INTERVAL_NORMAL_2520MS 0xFD: SAMPLE_INTERVAL_NORMAL_2530MS 0xFE: SAMPLE_INTERVAL_NORMAL_2540MS 0xFF: SAMPLE_INTERVAL_NORMAL_2550MS

0x00004056 BMS_VM_S2_SAMPLE_INTERVAL_CTL

Type: RW
Clock: pbus_wrclk
Reset State: 0x07
Reset Name: PERPH_RB

BMS_VM_S2_SAMPLE_INTERVAL_CTL

Bits	Name	Description
7:0	SAMPLE_INTER-VAL_CV_STATE	Sample delay (10*value) in ms in between measurements CV charge state (S2). This is basically the sampling interval (ts) of the VADC measurments 0x0: SAMPLE_INTERVAL_CV_0MS 0x1: SAMPLE_INTERVAL_CV_10MS 0x2: SAMPLE_INTERVAL_CV_20MS 0x3: SAMPLE_INTERVAL_CV_30MS 0x4: SAMPLE_INTERVAL_CV_40MS 0x5: SAMPLE_INTERVAL_CV_50MS 0x6: SAMPLE_INTERVAL_CV_60MS 0x7: SAMPLE_INTERVAL_CV_70MS 0x8: SAMPLE_INTERVAL_CV_80MS 0x9: SAMPLE_INTERVAL_CV_90MS 0xA: SAMPLE_INTERVAL_CV_100MS 0xB: SAMPLE_INTERVAL_CV_110MS 0xC: SAMPLE_INTERVAL_CV_120MS 0xD: SAMPLE_INTERVAL_CV_130MS 0xE: SAMPLE_INTERVAL_CV_140MS 0xF: SAMPLE_INTERVAL_CV_150MS 0x10: SAMPLE_INTERVAL_CV_160MS 0x11: SAMPLE_INTERVAL_CV_170MS 0x12: SAMPLE_INTERVAL_CV_180MS 0x12: SAMPLE_INTERVAL_CV_180MS

BMS_VM_S2_SAMPLE_INTERVAL_CTL (cont.)

Bits	Name	Description
		0x13: SAMPLE_INTERVAL_CV_190MS 0x14: SAMPLE_INTERVAL_CV_200MS 0x15: SAMPLE_INTERVAL_CV_210MS 0x16: SAMPLE_INTERVAL_CV_220MS 0x17: SAMPLE_INTERVAL_CV_230MS 0x18: SAMPLE_INTERVAL_CV_240MS 0x19: SAMPLE_INTERVAL_CV_250MS 0x1A: SAMPLE_INTERVAL_CV_260MS 0x1B: SAMPLE_INTERVAL_CV_270MS 0x1C: SAMPLE_INTERVAL_CV_280MS 0x1D: SAMPLE_INTERVAL_CV_290MS 0x1E: SAMPLE_INTERVAL_CV_300MS 0x1F: SAMPLE_INTERVAL_CV_310MS 0x20: SAMPLE_INTERVAL_CV_320MS 0x21: SAMPLE_INTERVAL_CV_330MS 0x22: SAMPLE_INTERVAL_CV_340MS 0x23: SAMPLE_INTERVAL_CV_350MS 0x24: SAMPLE_INTERVAL_CV_360MS 0x25: SAMPLE_INTERVAL_CV_370MS 0x26: SAMPLE_INTERVAL_CV_380MS 0x27: SAMPLE_INTERVAL_CV_390MS 0x28: SAMPLE_INTERVAL_CV_400MS 0x2D: SAMPLE_INTERVAL_CV_450MS 0x29: SAMPLE_INTERVAL_CV_410MS 0x2A: SAMPLE_INTERVAL_CV_420MS 0x2B: SAMPLE_INTERVAL_CV_430MS 0x2C: SAMPLE_INTERVAL_CV_440MS 0x2E: SAMPLE_INTERVAL_CV_460MS 0x2F: SAMPLE_INTERVAL_CV_470MS 0x30: SAMPLE_INTERVAL_CV_480MS 0x31: SAMPLE_INTERVAL_CV_490MS 0x32: SAMPLE_INTERVAL_CV_500MS 0x33: SAMPLE_INTERVAL_CV_510MS 0x34: SAMPLE_INTERVAL_CV_520MS 0x35: SAMPLE_INTERVAL_CV_530MS 0x36: SAMPLE_INTERVAL_CV_540MS 0x37: SAMPLE_INTERVAL_CV_550MS 0x38: SAMPLE_INTERVAL_CV_560MS 0x39: SAMPLE_INTERVAL_CV_570MS 0x3A: SAMPLE_INTERVAL_CV_580MS 0x3B: SAMPLE_INTERVAL_CV_590MS 0x3C: SAMPLE_INTERVAL_CV_600MS 0x3D: SAMPLE_INTERVAL_CV_610MS 0x3E: SAMPLE_INTERVAL_CV_620MS 0x3F: SAMPLE_INTERVAL_CV_630MS 0x40: SAMPLE_INTERVAL_CV_640MS

BMS_VM_S2_SAMPLE_INTERVAL_CTL (cont.)

Bits	Name	Description
		0x41: SAMPLE_INTERVAL_CV_650MS 0x42: SAMPLE_INTERVAL_CV_660MS 0x43: SAMPLE_INTERVAL_CV_670MS 0x44: SAMPLE_INTERVAL_CV_680MS 0x45: SAMPLE_INTERVAL_CV_690MS 0x46: SAMPLE_INTERVAL_CV_700MS 0x47: SAMPLE_INTERVAL_CV_710MS 0x48: SAMPLE_INTERVAL_CV_720MS 0x49: SAMPLE_INTERVAL_CV_730MS 0x4A: SAMPLE_INTERVAL_CV_740MS 0x4B: SAMPLE_INTERVAL_CV_750MS 0x4C: SAMPLE_INTERVAL_CV_760MS 0x4D: SAMPLE_INTERVAL_CV_770MS 0x4E: SAMPLE_INTERVAL_CV_780MS 0x4F: SAMPLE_INTERVAL_CV_790MS 0x50: SAMPLE_INTERVAL_CV_800MS 0x51: SAMPLE_INTERVAL_CV_810MS 0x52: SAMPLE_INTERVAL_CV_820MS 0x53: SAMPLE_INTERVAL_CV_830MS 0x54: SAMPLE_INTERVAL_CV_840MS 0x55: SAMPLE_INTERVAL_CV_850MS 0x56: SAMPLE_INTERVAL_CV_860MS 0x57: SAMPLE_INTERVAL_CV_870MS
		0x58: SAMPLE_INTERVAL_CV_880MS 0x59: SAMPLE_INTERVAL_CV_890MS 0x5A: SAMPLE_INTERVAL_CV_900MS 0x5B: SAMPLE_INTERVAL_CV_910MS 0x5C: SAMPLE_INTERVAL_CV_920MS 0x5D: SAMPLE_INTERVAL_CV_930MS 0x5E: SAMPLE_INTERVAL_CV_940MS 0x5F: SAMPLE_INTERVAL_CV_950MS 0x60: SAMPLE_INTERVAL_CV_960MS 0x61: SAMPLE_INTERVAL_CV_970MS 0x62: SAMPLE_INTERVAL_CV_980MS 0x63: SAMPLE_INTERVAL_CV_990MS 0x64: SAMPLE_INTERVAL_CV_1000MS 0x65: SAMPLE_INTERVAL_CV_1010MS 0x66: SAMPLE_INTERVAL_CV_1020MS 0x67: SAMPLE_INTERVAL_CV_1030MS 0x68: SAMPLE_INTERVAL_CV_1040MS 0x69: SAMPLE_INTERVAL_CV_1050MS 0x6A: SAMPLE_INTERVAL_CV_1060MS 0x6B: SAMPLE_INTERVAL_CV_1070MS 0x6C: SAMPLE_INTERVAL_CV_1080MS 0x6D: SAMPLE_INTERVAL_CV_1090MS 0x6E: SAMPLE_INTERVAL_CV_1100MS

BMS_VM_S2_SAMPLE_INTERVAL_CTL (cont.)

Bits	Name	Description
		0x6F: SAMPLE_INTERVAL_CV_1110MS 0x70: SAMPLE_INTERVAL_CV_1120MS 0x71: SAMPLE_INTERVAL_CV_1130MS 0x72: SAMPLE_INTERVAL_CV_1140MS 0x73: SAMPLE_INTERVAL_CV_1150MS 0x74: SAMPLE_INTERVAL_CV_1160MS 0x75: SAMPLE_INTERVAL_CV_1170MS 0x76: SAMPLE_INTERVAL_CV_1180MS 0x77: SAMPLE_INTERVAL_CV_1190MS 0x78: SAMPLE_INTERVAL_CV_1200MS 0x79: SAMPLE_INTERVAL_CV_1210MS 0x7A: SAMPLE_INTERVAL_CV_1220MS 0x7B: SAMPLE_INTERVAL_CV_1230MS 0x7C: SAMPLE_INTERVAL_CV_1240MS 0x7D: SAMPLE_INTERVAL_CV_1250MS 0x7E: SAMPLE_INTERVAL_CV_1260MS 0x7F: SAMPLE_INTERVAL_CV_1270MS 0x80: SAMPLE_INTERVAL_CV_1280MS 0x81: SAMPLE_INTERVAL_CV_1290MS 0x82: SAMPLE_INTERVAL_CV_1300MS 0x83: SAMPLE_INTERVAL_CV_1310MS 0x84: SAMPLE_INTERVAL_CV_1320MS 0x85: SAMPLE_INTERVAL_CV_1330MS 0x86: SAMPLE_INTERVAL_CV_1340MS 0x87: SAMPLE_INTERVAL_CV_1350MS 0x88: SAMPLE_INTERVAL_CV_1360MS 0x89: SAMPLE_INTERVAL_CV_1370MS 0x8A: SAMPLE_INTERVAL_CV_1380MS 0x8B: SAMPLE_INTERVAL_CV_1390MS 0x8C: SAMPLE_INTERVAL_CV_1400MS 0x8D: SAMPLE_INTERVAL_CV_1410MS 0x8E: SAMPLE_INTERVAL_CV_1420MS 0x8F: SAMPLE_INTERVAL_CV_1430MS 0x90: SAMPLE_INTERVAL_CV_1440MS 0x91: SAMPLE_INTERVAL_CV_1450MS 0x92: SAMPLE_INTERVAL_CV_1460MS 0x93: SAMPLE_INTERVAL_CV_1470MS 0x94: SAMPLE_INTERVAL_CV_1480MS 0x95: SAMPLE_INTERVAL_CV_1490MS 0x96: SAMPLE_INTERVAL_CV_1500MS 0x97: SAMPLE_INTERVAL_CV_1510MS 0x98: SAMPLE_INTERVAL_CV_1520MS 0x99: SAMPLE_INTERVAL_CV_1530MS 0x9A: SAMPLE_INTERVAL_CV_1540MS 0x9B: SAMPLE_INTERVAL_CV_1550MS 0x9C: SAMPLE_INTERVAL_CV_1560MS

BMS_VM_S2_SAMPLE_INTERVAL_CTL (cont.)

Bits	Name	Description
		0x9D: SAMPLE_INTERVAL_CV_1570MS 0x9E: SAMPLE_INTERVAL_CV_1580MS 0x9F: SAMPLE_INTERVAL_CV_1590MS 0xA0: SAMPLE_INTERVAL_CV_1600MS 0xA1: SAMPLE_INTERVAL_CV_1610MS 0xA2: SAMPLE_INTERVAL_CV_1620MS 0xA3: SAMPLE_INTERVAL_CV_1630MS 0xA4: SAMPLE_INTERVAL_CV_1640MS 0xA5: SAMPLE_INTERVAL_CV_1650MS 0xA6: SAMPLE_INTERVAL_CV_1660MS 0xA7: SAMPLE_INTERVAL_CV_1670MS 0xA8: SAMPLE_INTERVAL_CV_1680MS 0xA9: SAMPLE_INTERVAL_CV_1690MS 0xAA: SAMPLE_INTERVAL_CV_1700MS 0xAB: SAMPLE_INTERVAL_CV_1710MS 0xAC: SAMPLE_INTERVAL_CV_1720MS 0xAD: SAMPLE_INTERVAL_CV_1730MS 0xAE: SAMPLE_INTERVAL_CV_1740MS 0xAF: SAMPLE_INTERVAL_CV_1750MS 0xB0: SAMPLE_INTERVAL_CV_1760MS 0xB1: SAMPLE_INTERVAL_CV_1770MS 0xB2: SAMPLE_INTERVAL_CV_1780MS 0xB3: SAMPLE_INTERVAL_CV_1790MS 0xB4: SAMPLE_INTERVAL_CV_1800MS 0xB5: SAMPLE_INTERVAL_CV_1810MS 0xB6: SAMPLE_INTERVAL_CV_1820MS 0xB7: SAMPLE_INTERVAL_CV_1830MS 0xB8: SAMPLE_INTERVAL_CV_1840MS 0xB9: SAMPLE_INTERVAL_CV_1850MS 0xBA: SAMPLE_INTERVAL_CV_1860MS 0xBB: SAMPLE_INTERVAL_CV_1870MS 0xBC: SAMPLE_INTERVAL_CV_1880MS 0xBD: SAMPLE_INTERVAL_CV_1890MS 0xBE: SAMPLE_INTERVAL_CV_1900MS 0xBF: SAMPLE_INTERVAL_CV_1910MS 0xC0: SAMPLE_INTERVAL_CV_1920MS 0xC1: SAMPLE_INTERVAL_CV_1930MS 0xC2: SAMPLE_INTERVAL_CV_1940MS 0xC3: SAMPLE_INTERVAL_CV_1950MS 0xC4: SAMPLE_INTERVAL_CV_1960MS 0xC5: SAMPLE_INTERVAL_CV_1970MS 0xC6: SAMPLE_INTERVAL_CV_1980MS 0xC7: SAMPLE_INTERVAL_CV_1990MS 0xC8: SAMPLE_INTERVAL_CV_2000MS 0xC9: SAMPLE_INTERVAL_CV_2010MS 0xCA: SAMPLE_INTERVAL_CV_2020MS

BMS_VM_S2_SAMPLE_INTERVAL_CTL (cont.)

Bits	Name	Description
		0xCB: SAMPLE_INTERVAL_CV_2030MS 0xCC: SAMPLE_INTERVAL_CV_2040MS 0xCD: SAMPLE_INTERVAL_CV_2050MS 0xCE: SAMPLE_INTERVAL_CV_2060MS 0xCF: SAMPLE_INTERVAL_CV_2070MS 0xD0: SAMPLE_INTERVAL_CV_2080MS 0xD1: SAMPLE_INTERVAL_CV_2090MS 0xD2: SAMPLE_INTERVAL_CV_2100MS 0xD3: SAMPLE_INTERVAL_CV_2110MS 0xD4: SAMPLE_INTERVAL_CV_2120MS 0xD5: SAMPLE_INTERVAL_CV_2130MS 0xD6: SAMPLE_INTERVAL_CV_2140MS 0xD7: SAMPLE_INTERVAL_CV_2150MS 0xD8: SAMPLE_INTERVAL_CV_2160MS 0xD9: SAMPLE_INTERVAL_CV_2170MS 0xDA: SAMPLE_INTERVAL_CV_2180MS 0xDB: SAMPLE_INTERVAL_CV_2190MS 0xDC: SAMPLE_INTERVAL_CV_2200MS 0xDD: SAMPLE_INTERVAL_CV_2210MS 0xDE: SAMPLE_INTERVAL_CV_2220MS 0xDF: SAMPLE_INTERVAL_CV_2230MS 0xE0: SAMPLE_INTERVAL_CV_2240MS 0xE1: SAMPLE_INTERVAL_CV_2250MS 0xE2: SAMPLE_INTERVAL_CV_2260MS 0xE3: SAMPLE_INTERVAL_CV_2270MS 0xE4: SAMPLE_INTERVAL_CV_2280MS 0xE5: SAMPLE_INTERVAL_CV_2290MS 0xE6: SAMPLE_INTERVAL_CV_2300MS 0xE7: SAMPLE_INTERVAL_CV_2310MS 0xE8: SAMPLE_INTERVAL_CV_2320MS 0xE9: SAMPLE_INTERVAL_CV_2330MS 0xEA: SAMPLE_INTERVAL_CV_2340MS 0xEB: SAMPLE_INTERVAL_CV_2350MS 0xEC: SAMPLE_INTERVAL_CV_2360MS 0xED: SAMPLE_INTERVAL_CV_2370MS 0xEE: SAMPLE_INTERVAL_CV_2380MS 0xEF: SAMPLE_INTERVAL_CV_2390MS 0xF0: SAMPLE_INTERVAL_CV_2400MS 0xF1: SAMPLE_INTERVAL_CV_2410MS 0xF2: SAMPLE_INTERVAL_CV_2420MS 0xF3: SAMPLE_INTERVAL_CV_2430MS 0xF4: SAMPLE_INTERVAL_CV_2440MS 0xF5: SAMPLE_INTERVAL_CV_2450MS 0xF6: SAMPLE_INTERVAL_CV_2460MS 0xF7: SAMPLE_INTERVAL_CV_2470MS 0xF8: SAMPLE_INTERVAL_CV_2480MS

BMS_VM_S2_SAMPLE_INTERVAL_CTL (cont.)

Bits	Name	Description
		0xF9: SAMPLE_INTERVAL_CV_2490MS 0xFA: SAMPLE_INTERVAL_CV_2500MS 0xFB: SAMPLE_INTERVAL_CV_2510MS 0xFC: SAMPLE_INTERVAL_CV_2520MS 0xFD: SAMPLE_INTERVAL_CV_2530MS 0xFE: SAMPLE_INTERVAL_CV_2540MS 0xFF: SAMPLE_INTERVAL_CV_2550MS

0x00004057 BMS_VM_S3_SAMPLE_INTERVAL_CTL

Type: RW
Clock: pbus_wrclk
Reset State: 0x8C
Reset Name: PERPH_RB

BMS_VM_S3_SAMPLE_INTERVAL_CTL

Bits	Name	Description
7:0	SAMPLE_INTER-VAL_OCV_STATE	Sample delay (value in sec) in ms between measurements in OCV state (S3). This is basically the sampling interval (ts) of the VADC measurments 0x0: SAMPLE_INTERVAL_OCV_0S 0x1: SAMPLE_INTERVAL_OCV_1S 0x2: SAMPLE_INTERVAL_OCV_2S 0x3: SAMPLE_INTERVAL_OCV_3S 0x4: SAMPLE_INTERVAL_OCV_4S 0x5: SAMPLE_INTERVAL_OCV_5S 0x6: SAMPLE_INTERVAL_OCV_6S 0x7: SAMPLE_INTERVAL_OCV_7S 0x8: SAMPLE_INTERVAL_OCV_8S 0x9: SAMPLE_INTERVAL_OCV_9S 0xA: SAMPLE_INTERVAL_OCV_10S 0xB: SAMPLE_INTERVAL_OCV_11S 0xC: SAMPLE_INTERVAL_OCV_12S 0xD: SAMPLE_INTERVAL_OCV_13S 0xE: SAMPLE_INTERVAL_OCV_14S 0xF: SAMPLE_INTERVAL_OCV_15S 0x10: SAMPLE_INTERVAL_OCV_16S 0x11: SAMPLE_INTERVAL_OCV_17S 0x12: SAMPLE_INTERVAL_OCV_18S 0x13: SAMPLE_INTERVAL_OCV_19S

BMS_VM_S3_SAMPLE_INTERVAL_CTL (cont.)

Bits	Name	Description
		0x14: SAMPLE_INTERVAL_OCV_20S 0x15: SAMPLE_INTERVAL_OCV_21S 0x16: SAMPLE_INTERVAL_OCV_22S 0x17: SAMPLE_INTERVAL_OCV_23S 0x18: SAMPLE_INTERVAL_OCV_24S 0x19: SAMPLE_INTERVAL_OCV_25S 0x1A: SAMPLE_INTERVAL_OCV_26S 0x1B: SAMPLE_INTERVAL_OCV_27S 0x1C: SAMPLE_INTERVAL_OCV_28S 0x1D: SAMPLE_INTERVAL_OCV_29S 0x1E: SAMPLE_INTERVAL_OCV_30S 0x1F: SAMPLE_INTERVAL_OCV_31S 0x20: SAMPLE_INTERVAL_OCV_32S 0x21: SAMPLE_INTERVAL_OCV_33S 0x22: SAMPLE_INTERVAL_OCV_34S 0x23: SAMPLE_INTERVAL_OCV_35S 0x24: SAMPLE_INTERVAL_OCV_36S 0x25: SAMPLE_INTERVAL_OCV_37S 0x26: SAMPLE_INTERVAL_OCV_38S 0x27: SAMPLE_INTERVAL_OCV_39S 0x28: SAMPLE_INTERVAL_OCV_40S 0x29: SAMPLE_INTERVAL_OCV_41S 0x2A: SAMPLE_INTERVAL_OCV_42S 0x2B: SAMPLE_INTERVAL_OCV_43S 0x2C: SAMPLE_INTERVAL_OCV_44S 0x2D: SAMPLE_INTERVAL_OCV_45S 0x2E: SAMPLE_INTERVAL_OCV_46S 0x2F: SAMPLE_INTERVAL_OCV_47S 0x30: SAMPLE_INTERVAL_OCV_48S 0x31: SAMPLE_INTERVAL_OCV_49S 0x32: SAMPLE_INTERVAL_OCV_50S 0x33: SAMPLE_INTERVAL_OCV_51S 0x34: SAMPLE_INTERVAL_OCV_52S 0x35: SAMPLE_INTERVAL_OCV_53S 0x36: SAMPLE_INTERVAL_OCV_54S 0x37: SAMPLE_INTERVAL_OCV_55S 0x38: SAMPLE_INTERVAL_OCV_56S 0x39: SAMPLE_INTERVAL_OCV_57S 0x3A: SAMPLE_INTERVAL_OCV_58S 0x3B: SAMPLE_INTERVAL_OCV_59S 0x3C: SAMPLE_INTERVAL_OCV_60S 0x3D: SAMPLE_INTERVAL_OCV_61S 0x3E: SAMPLE_INTERVAL_OCV_62S 0x3F: SAMPLE_INTERVAL_OCV_63S 0x40: SAMPLE_INTERVAL_OCV_64S 0x41: SAMPLE_INTERVAL_OCV_65S

BMS_VM_S3_SAMPLE_INTERVAL_CTL (cont.)

Bits	Name	Description
		0x42: SAMPLE_INTERVAL_OCV_66S 0x43: SAMPLE_INTERVAL_OCV_67S 0x44: SAMPLE_INTERVAL_OCV_68S 0x45: SAMPLE_INTERVAL_OCV_69S 0x46: SAMPLE_INTERVAL_OCV_70S 0x47: SAMPLE_INTERVAL_OCV_71S 0x48: SAMPLE_INTERVAL_OCV_72S 0x49: SAMPLE_INTERVAL_OCV_73S 0x4A: SAMPLE_INTERVAL_OCV_74S 0x4B: SAMPLE_INTERVAL_OCV_75S 0x4C: SAMPLE_INTERVAL_OCV_76S 0x4E: SAMPLE_INTERVAL_OCV_78S 0x4F: SAMPLE_INTERVAL_OCV_79S 0x50: SAMPLE_INTERVAL_OCV_80S 0x51: SAMPLE_INTERVAL_OCV_81S 0x52: SAMPLE_INTERVAL_OCV_82S 0x53: SAMPLE_INTERVAL_OCV_83S 0x54: SAMPLE_INTERVAL_OCV_84S 0x55: SAMPLE_INTERVAL_OCV_85S 0x56: SAMPLE_INTERVAL_OCV_86S 0x57: SAMPLE_INTERVAL_OCV_87S 0x58: SAMPLE_INTERVAL_OCV_88S
		0x59: SAMPLE_INTERVAL_OCV_89S 0x5A: SAMPLE_INTERVAL_OCV_90S 0x5B: SAMPLE_INTERVAL_OCV_91S 0x5C: SAMPLE_INTERVAL_OCV_92S 0x5D: SAMPLE_INTERVAL_OCV_93S 0x5E: SAMPLE_INTERVAL_OCV_94S 0x5F: SAMPLE_INTERVAL_OCV_95S 0x60: SAMPLE_INTERVAL_OCV_96S 0x61: SAMPLE_INTERVAL_OCV_97S 0x62: SAMPLE_INTERVAL_OCV_98S 0x63: SAMPLE_INTERVAL_OCV_99S 0x64: SAMPLE_INTERVAL_OCV_100S 0x65: SAMPLE_INTERVAL_OCV_101S 0x66: SAMPLE_INTERVAL_OCV_102S 0x67: SAMPLE_INTERVAL_OCV_103S 0x68: SAMPLE_INTERVAL_OCV_104S 0x69: SAMPLE_INTERVAL_OCV_105S 0x6A: SAMPLE_INTERVAL_OCV_106S 0x6B: SAMPLE_INTERVAL_OCV_107S 0x6C: SAMPLE_INTERVAL_OCV_108S 0x6D: SAMPLE_INTERVAL_OCV_109S 0x6E: SAMPLE_INTERVAL_OCV_110S 0x6F: SAMPLE_INTERVAL_OCV_111S

BMS_VM_S3_SAMPLE_INTERVAL_CTL (cont.)

Bits	Name	Description
		0x70: SAMPLE_INTERVAL_OCV_112S 0x71: SAMPLE_INTERVAL_OCV_113S 0x72: SAMPLE_INTERVAL_OCV_114S 0x73: SAMPLE_INTERVAL_OCV_115S 0x74: SAMPLE_INTERVAL_OCV_116S 0x75: SAMPLE_INTERVAL_OCV_117S 0x76: SAMPLE_INTERVAL_OCV_118S 0x77: SAMPLE_INTERVAL_OCV_119S 0x78: SAMPLE_INTERVAL_OCV_120S 0x79: SAMPLE_INTERVAL_OCV_121S 0x7A: SAMPLE_INTERVAL_OCV_122S 0x7B: SAMPLE_INTERVAL_OCV_123S 0x7C: SAMPLE_INTERVAL_OCV_124S 0x7D: SAMPLE_INTERVAL_OCV_125S 0x7E: SAMPLE_INTERVAL_OCV_126S 0x7F: SAMPLE_INTERVAL_OCV_127S 0x80: SAMPLE_INTERVAL_OCV_128S 0x81: SAMPLE_INTERVAL_OCV_129S 0x82: SAMPLE_INTERVAL_OCV_130S 0x83: SAMPLE_INTERVAL_OCV_131S 0x84: SAMPLE_INTERVAL_OCV_132S 0x85: SAMPLE_INTERVAL_OCV_133S 0x86: SAMPLE_INTERVAL_OCV_134S 0x87: SAMPLE_INTERVAL_OCV_135S 0x88: SAMPLE_INTERVAL_OCV_136S 0x89: SAMPLE_INTERVAL_OCV_137S 0x8A: SAMPLE_INTERVAL_OCV_138S 0x8B: SAMPLE_INTERVAL_OCV_139S 0x8C: SAMPLE_INTERVAL_OCV_140S 0x8D: SAMPLE_INTERVAL_OCV_141S 0x8E: SAMPLE_INTERVAL_OCV_142S 0x8F: SAMPLE_INTERVAL_OCV_143S 0x90: SAMPLE_INTERVAL_OCV_144S 0x91: SAMPLE_INTERVAL_OCV_145S 0x92: SAMPLE_INTERVAL_OCV_146S 0x93: SAMPLE_INTERVAL_OCV_147S 0x94: SAMPLE_INTERVAL_OCV_148S 0x95: SAMPLE_INTERVAL_OCV_149S 0x96: SAMPLE_INTERVAL_OCV_150S 0x97: SAMPLE_INTERVAL_OCV_151S 0x98: SAMPLE_INTERVAL_OCV_152S 0x99: SAMPLE_INTERVAL_OCV_153S 0x9A: SAMPLE_INTERVAL_OCV_154S 0x9B: SAMPLE_INTERVAL_OCV_155S 0x9C: SAMPLE_INTERVAL_OCV_156S 0x9D: SAMPLE_INTERVAL_OCV_157S

BMS_VM_S3_SAMPLE_INTERVAL_CTL (cont.)

Bits	Name	Description
		0x9E: SAMPLE_INTERVAL_OCV_158S 0x9F: SAMPLE_INTERVAL_OCV_159S 0xA0: SAMPLE_INTERVAL_OCV_160S 0xA1: SAMPLE_INTERVAL_OCV_161S 0xA2: SAMPLE_INTERVAL_OCV_162S 0xA3: SAMPLE_INTERVAL_OCV_163S 0xA4: SAMPLE_INTERVAL_OCV_164S 0xA5: SAMPLE_INTERVAL_OCV_165S 0xA6: SAMPLE_INTERVAL_OCV_166S 0xA7: SAMPLE_INTERVAL_OCV_167S 0xA8: SAMPLE_INTERVAL_OCV_168S 0xA9: SAMPLE_INTERVAL_OCV_169S 0xAA: SAMPLE_INTERVAL_OCV_170S 0xAB: SAMPLE_INTERVAL_OCV_171S 0xAC: SAMPLE_INTERVAL_OCV_172S 0xAD: SAMPLE_INTERVAL_OCV_173S 0xAE: SAMPLE_INTERVAL_OCV_174S 0xAF: SAMPLE_INTERVAL_OCV_175S 0xB0: SAMPLE_INTERVAL_OCV_176S 0xB1: SAMPLE_INTERVAL_OCV_177S 0xB2: SAMPLE_INTERVAL_OCV_178S 0xB3: SAMPLE_INTERVAL_OCV_179S 0xB4: SAMPLE_INTERVAL_OCV_180S
		0xB5: SAMPLE_INTERVAL_OCV_181S 0xB6: SAMPLE_INTERVAL_OCV_182S 0xB7: SAMPLE_INTERVAL_OCV_183S 0xB8: SAMPLE_INTERVAL_OCV_184S 0xB9: SAMPLE_INTERVAL_OCV_185S 0xBA: SAMPLE_INTERVAL_OCV_186S 0xBB: SAMPLE_INTERVAL_OCV_187S 0xBC: SAMPLE_INTERVAL_OCV_188S 0xBD: SAMPLE_INTERVAL_OCV_189S 0xBE: SAMPLE_INTERVAL_OCV_190S 0xBF: SAMPLE_INTERVAL_OCV_191S 0xC0: SAMPLE_INTERVAL_OCV_192S 0xC1: SAMPLE_INTERVAL_OCV_193S 0xC2: SAMPLE_INTERVAL_OCV_194S 0xC3: SAMPLE_INTERVAL_OCV_195S 0xC4: SAMPLE_INTERVAL_OCV_196S 0xC5: SAMPLE_INTERVAL_OCV_197S 0xC6: SAMPLE_INTERVAL_OCV_198S 0xC7: SAMPLE_INTERVAL_OCV_199S 0xC8: SAMPLE_INTERVAL_OCV_200S 0xC9: SAMPLE_INTERVAL_OCV_201S 0xCA: SAMPLE_INTERVAL_OCV_202S 0xCB: SAMPLE_INTERVAL_OCV_203S

BMS_VM_S3_SAMPLE_INTERVAL_CTL (cont.)

Bits	Name	Description
		0xCC: SAMPLE_INTERVAL_OCV_204S 0xCD: SAMPLE_INTERVAL_OCV_205S 0xCE: SAMPLE_INTERVAL_OCV_206S 0xCF: SAMPLE_INTERVAL_OCV_207S 0xD0: SAMPLE_INTERVAL_OCV_208S 0xD1: SAMPLE_INTERVAL_OCV_209S 0xD2: SAMPLE_INTERVAL_OCV_210S 0xD3: SAMPLE_INTERVAL_OCV_211S 0xD4: SAMPLE_INTERVAL_OCV_212S 0xD5: SAMPLE_INTERVAL_OCV_213S 0xD6: SAMPLE_INTERVAL_OCV_214S 0xD7: SAMPLE_INTERVAL_OCV_215S 0xD8: SAMPLE_INTERVAL_OCV_216S 0xD9: SAMPLE_INTERVAL_OCV_217S 0xDA: SAMPLE_INTERVAL_OCV_218S 0xDB: SAMPLE_INTERVAL_OCV_219S 0xDC: SAMPLE_INTERVAL_OCV_220S 0xDD: SAMPLE_INTERVAL_OCV_221S 0xDE: SAMPLE_INTERVAL_OCV_222S 0xDF: SAMPLE_INTERVAL_OCV_223S 0xE0: SAMPLE_INTERVAL_OCV_224S 0xE1: SAMPLE_INTERVAL_OCV_225S 0xE2: SAMPLE_INTERVAL_OCV_226S

BMS_VM_S3_SAMPLE_INTERVAL_CTL (cont.)

Bits	Name	Description
		0xE3: SAMPLE_INTERVAL_OCV_227S 0xE4: SAMPLE_INTERVAL_OCV_228S 0xE5: SAMPLE_INTERVAL_OCV_229S 0xE6: SAMPLE_INTERVAL_OCV_230S 0xE7: SAMPLE_INTERVAL_OCV_231S 0xE8: SAMPLE_INTERVAL_OCV_232S 0xE9: SAMPLE_INTERVAL_OCV_233S 0xEA: SAMPLE_INTERVAL_OCV_234S 0xEB: SAMPLE_INTERVAL_OCV_235S 0xEC: SAMPLE_INTERVAL_OCV_236S 0xED: SAMPLE_INTERVAL_OCV_237S 0xEE: SAMPLE_INTERVAL_OCV_238S 0xEF: SAMPLE_INTERVAL_OCV_239S 0xF0: SAMPLE_INTERVAL_OCV_240S 0xF1: SAMPLE_INTERVAL_OCV_241S 0xF2: SAMPLE_INTERVAL_OCV_242S 0xF3: SAMPLE_INTERVAL_OCV_243S 0xF4: SAMPLE_INTERVAL_OCV_244S 0xF5: SAMPLE_INTERVAL_OCV_245S 0xF6: SAMPLE_INTERVAL_OCV_246S 0xF7: SAMPLE_INTERVAL_OCV_247S 0xF8: SAMPLE_INTERVAL_OCV_248S 0xF9: SAMPLE_INTERVAL_OCV_249S 0xFA: SAMPLE_INTERVAL_OCV_250S 0xFB: SAMPLE_INTERVAL_OCV_251S 0xFC: SAMPLE_INTERVAL_OCV_252S 0xFD: SAMPLE_INTERVAL_OCV_253S 0xFE: SAMPLE_INTERVAL_OCV_254S 0xFF: SAMPLE_INTERVAL_OCV_255S

0x00004058 BMS_VM_S7_DELAY_INTERVAL_CTL

Type: RW
Clock: pbus_wrclk
Reset State: 0x08
Reset Name: xVdd_rb

BMS_VM_S7_DELAY_INTERVAL_CTL

Bits	Name	Description
3:0	SAMPLE_DE-LAY_PON_OCV_STATE	Delay (if value=0,delay=0,else delay=2^(value-1)) prior to measurement for PON OCV state (S7). 0x0: S7_DELAY_0MS 0x1: S7_DELAY_1MS 0x2: S7_DELAY_2MS 0x3: S7_DELAY_4MS 0x4: S7_DELAY_8MS 0x5: S7_DELAY_16MS 0x6: S7_DELAY_32MS 0x7: S7_DELAY_64MS 0x8: S7_DELAY_128MS 0x9: S7_DELAY_256MS 0xA: S7_DELAY_512MS 0xB: S7_DELAY_1024MS 0xC: S7_DELAY_2048MS 0xD: S7_DELAY_4196MS 0xE: S7_DELAY_8192MS 0xF: S7_DELAY_16384MS

0x0000405A BMS_VM_S1_SAMP_AVG_CTL

Type: RW
Clock: pbus_wrclk
Reset State: 0x03
Reset Name: PERPH_RB

BMS_VM_S1_SAMP_AVG_CTL

Bits	Name	Description
3:0	SAMP_AVG_NOR-MAL_STATE	Select number of samples for use in fast average mode (2^(value). 0x0: SAMPLE_1 0x1: SAMPLE_2 0x2: SAMPLE_4 0x3: SAMPLE_8 0x4: SAMPLE_16 0x5: SAMPLE_32 0x6: SAMPLE_64 0x7: SAMPLE_128 0x8: SAMPLE_256 0x9: SAMPLE_512

0x0000405B BMS_VM_S2_SAMP_AVG_CTL

Type: RW
Clock: pbus_wrclk
Reset State: 0x03
Reset Name: PERPH_RB

BMS_VM_S2_SAMP_AVG_CTL

Bits	Name	Description
3:0	SAMP_AVG_CV_STATE	Select number of samples for use in fast average mode (2^(value). 0x0: SAMPLE_1 0x1: SAMPLE_2 0x2: SAMPLE_4 0x3: SAMPLE_8 0x4: SAMPLE_16 0x5: SAMPLE_32 0x6: SAMPLE_64 0x7: SAMPLE_128 0x8: SAMPLE_256 0x9: SAMPLE_512

0x0000405C BMS_VM_S3_SAMP_AVG_CTL

Type: RW
Clock: pbus_wrclk
Reset State: 0x03
Reset Name: PERPH_RB

BMS_VM_S3_SAMP_AVG_CTL

Bits	Name	Description
3:0	SAMP_AVG_OCV_STATE	Select number of samples for use in fast average mode (2^(value). 0x0: SAMPLE_1 0x1: SAMPLE_2 0x2: SAMPLE_4 0x3: SAMPLE_8 0x4: SAMPLE_16 0x5: SAMPLE_32 0x6: SAMPLE_64 0x7: SAMPLE_128 0x8: SAMPLE_256 0x9: SAMPLE_512

0x0000405D BMS_VM_S7_SAMP_AVG_CTL

Type: RW
Clock: pbus_wrclk
Reset State: 0x03
Reset Name: PERPH_RB

BMS_VM_S7_SAMP_AVG_CTL

Bits	Name	Description
3:0	SAMP_AVG_PON_OCV_STATE	Select number of samples for use in fast average mode (2^(value). 0x0: SAMPLE_1 0x1: SAMPLE_2 0x2: SAMPLE_4 0x3: SAMPLE_8 0x4: SAMPLE_16 0x5: SAMPLE_32 0x6: SAMPLE_64 0x7: SAMPLE_128 0x8: SAMPLE_256 0x9: SAMPLE_512

0x0000405E BMS_VM_S1_ACCUM_CNT_CTL

Type: RW
Clock: pbus_wrclk
Reset State: 0x07
Reset Name: PERPH_RB

BMS_VM_S1_ACCUM_CNT_CTL

Bits	Name	Description
2:0	S1_ACCUM_CNT_THR	Number of VADC samples to be accumulated (averaging window). (if value=0, accum_cnt=0; else accum_cnt=2^(value+1). 0x0: S1_ACCUM_CNT_0 0x1: S1_ACCUM_CNT_4 0x2: S1_ACCUM_CNT_8 0x3: S1_ACCUM_CNT_16 0x4: S1_ACCUM_CNT_32 0x5: S1_ACCUM_CNT_64 0x6: S1_ACCUM_CNT_128 0x7: S1_ACCUM_CNT_256

0x0000405F BMS_VM_S2_ACCUM_CNT_CTL

Type: RW
Clock: pbus_wrclk
Reset State: 0x06
Reset Name: PERPH_RB

BMS_VM_S2_ACCUM_CNT_CTL

Bits	Name	Description
2:0	S2_ACCUM_CNT_THR	Number of VADC samples to be accumulated (averaging window). (if value=0, accum_cnt=0; else accum_cnt=2^(value+1). 0x0: S2_ACCUM_CNT_0 0x1: S2_ACCUM_CNT_4 0x2: S2_ACCUM_CNT_8 0x3: S2_ACCUM_CNT_16 0x4: S2_ACCUM_CNT_32 0x5: S2_ACCUM_CNT_64 0x6: S2_ACCUM_CNT_128 0x7: S2_ACCUM_CNT_256

0x00004060 BMS_VM_ACCUM_DATA0_RT

Type: R
Clock: pbus_wrclk
Reset State: 0x00000000
Reset Name: N/A

BMS_VM_ACCUM_DATA0_RT

Bits	Name	Description
7:0	ACCUM_DATA_RT_7_0	DEF: X Accumulator data real-time value byte 0.

0x00004061 BMS_VM_ACCUM_DATA1_RT

Type: R
Clock: pbus_wrclk
Reset State: 0x00000000
Reset Name: N/A

BMS_VM_ACCUM_DATA1_RT

Bits	Name	Description
7:0	ACCUM_DATA_RT_15_8	DEF: X Accumulator data real-time value byte 1.

0x00004062 BMS_VM_ACCUM_DATA2_RT

Type: R
Clock: pbus_wrclk
Reset State: 0x00000000
Reset Name: N/A

BMS_VM_ACCUM_DATA2_RT

Bits	Name	Description
7:0	ACCUM_DATA_RT_23_16	DEF: X Accumulator data real-time value byte 2.

0x00004063 BMS_VM_ACCUM_DATA0_SD

Type: R
Clock: pbus_wrclk
Reset State: 0x00000000
Reset Name: N/A

BMS_VM_ACCUM_DATA0_SD

Bits	Name	Description
7:0	ACCUM_DATA_SD_7_0	DEF: X Accumulator data shadow value byte 0. This shadow copy byte 0 is updated only when a state -change interrupt happens. Software needs to read this value and compute the partial average by itself

0x00004064 BMS_VM_ACCUM_DATA1_SD

Type: R
Clock: pbus_wrclk
Reset State: 0x00000000
Reset Name: N/A

BMS_VM_ACCUM_DATA1_SD

Bits	Name	Description
7:0	ACCUM_DATA_SD_15_8	DEF: X Accumulator data shadow value byte 1. This shadow copy byte 1 is updated only when a state -change interrupt happens. Software needs to read this value and compute the partial average by itself

0x00004065 BMS_VM_ACCUM_DATA2_SD

Type: R
Clock: pbus_wrclk
Reset State: 0x00000000
Reset Name: N/A

BMS_VM_ACCUM_DATA2_SD

Bits	Name	Description
7:0	ACCUM_DATA_SD_23_16	DEF: X Accumulator data shadow value byte 2. This shadow copy byte 2 is updated only when a state -change interrupt happens. Software needs to read this value and compute the partial average by itself

0x00004066 BMS_VM_ACCUM_CNT_RT

Type: R
Clock: pbus_wrclk
Reset State: 0x00000000
Reset Name: N/A

BMS_VM_ACCUM_CNT_RT

Bits	Name	Description
7:0	ACCUM_CNT_RT_7_0	DEF: X Accumulator count real-time value

0x00004067 BMS_VM_ACCUM_CNT_SD

Type: R
Clock: pbus_wrclk
Reset State: 0x00000000
Reset Name: N/A

BMS_VM_ACCUM_CNT_SD

Bits	Name	Description
7:0	ACCUM_CNT_SD_7_0	DEF: X Accumulator count shadow value

0x0000406A BMS_VM_S3_S7_OCV_DATA0

Type: R
Clock: pbus_wrclk
Reset State: 0x00000000
Reset Name: N/A

BMS_VM_S3_S7_OCV_DATA0

Bits	Name	Description
7:0	S3_S7_OCV_7_0	DEF: X LSB of S3 and S7 OCV measurement 0x0: OCV_LSB_0UV 0x1: OCV_LSB_300UV 0x2: OCV_LSB_600UV 0x3: OCV_LSB_900UV 0x4: OCV_LSB_1200UV 0x5: OCV_LSB_1500UV 0x6: OCV_LSB_1800UV 0x7: OCV_LSB_2100UV 0x8: OCV_LSB_2400UV 0x9: OCV_LSB_2700UV 0xA: OCV_LSB_3000UV 0xB: OCV_LSB_3300UV 0xC: OCV_LSB_3600UV 0xD: OCV_LSB_3900UV 0xE: OCV_LSB_4200UV 0xF: OCV_LSB_4500UV 0x10: OCV_LSB_4800UV 0x11: OCV_LSB_5100UV 0x12: OCV_LSB_5400UV 0x13: OCV_LSB_5700UV 0x14: OCV_LSB_6000UV

BMS_VM_S3_S7_OCV_DATA0 (cont.)

Bits	Name	Description
		0x15: OCV_LSB_6300UV 0x16: OCV_LSB_6600UV 0x17: OCV_LSB_6900UV 0x18: OCV_LSB_7200UV 0x19: OCV_LSB_7500UV 0x1A: OCV_LSB_7800UV 0x1B: OCV_LSB_8100UV 0x1C: OCV_LSB_8400UV 0x1D: OCV_LSB_8700UV 0x1E: OCV_LSB_9000UV 0x1F: OCV_LSB_9300UV 0x20: OCV_LSB_9600UV 0x21: OCV_LSB_9900UV 0x22: OCV_LSB_10200UV 0x23: OCV_LSB_10500UV 0x24: OCV_LSB_10800UV 0x25: OCV_LSB_11100UV 0x26: OCV_LSB_11400UV 0x27: OCV_LSB_11700UV 0x28: OCV_LSB_12000UV 0x29: OCV_LSB_12300UV 0x2A: OCV_LSB_12600UV 0x2B: OCV_LSB_12900UV
		0x2C: OCV_LSB_13200UV 0x2D: OCV_LSB_13500UV 0x2E: OCV_LSB_13800UV 0x2F: OCV_LSB_14100UV 0x30: OCV_LSB_14400UV 0x31: OCV_LSB_14700UV 0x32: OCV_LSB_15000UV 0x33: OCV_LSB_15300UV 0x34: OCV_LSB_15600UV 0x35: OCV_LSB_15900UV 0x36: OCV_LSB_16200UV 0x37: OCV_LSB_16500UV 0x38: OCV_LSB_16800UV 0x39: OCV_LSB_17100UV 0x3A: OCV_LSB_17400UV 0x3B: OCV_LSB_17700UV 0x3C: OCV_LSB_18000UV 0x3D: OCV_LSB_18300UV 0x3E: OCV_LSB_18600UV 0x3F: OCV_LSB_18900UV 0x40: OCV_LSB_19200UV 0x41: OCV_LSB_19500UV 0x42: OCV_LSB_19800UV

BMS_VM_S3_S7_OCV_DATA0 (cont.)

Bits	Name	Description
		0x43: OCV_LSB_20100UV 0x44: OCV_LSB_20400UV 0x45: OCV_LSB_20700UV 0x46: OCV_LSB_21000UV 0x47: OCV_LSB_21300UV 0x48: OCV_LSB_21600UV 0x49: OCV_LSB_21900UV 0x4A: OCV_LSB_22200UV 0x4B: OCV_LSB_22500UV 0x4C: OCV_LSB_22800UV 0x4D: OCV_LSB_23100UV 0x4E: OCV_LSB_23400UV 0x4F: OCV_LSB_23700UV 0x50: OCV_LSB_24000UV 0x51: OCV_LSB_24300UV 0x52: OCV_LSB_24600UV 0x53: OCV_LSB_24900UV 0x54: OCV_LSB_25200UV 0x55: OCV_LSB_25500UV 0x56: OCV_LSB_25800UV 0x57: OCV_LSB_26100UV 0x58: OCV_LSB_26400UV 0x59: OCV_LSB_26700UV 0x5A: OCV_LSB_27000UV 0x5B: OCV_LSB_27300UV 0x5C: OCV_LSB_27600UV 0x5D: OCV_LSB_27900UV 0x5E: OCV_LSB_28200UV 0x5F: OCV_LSB_28500UV 0x60: OCV_LSB_28800UV 0x61: OCV_LSB_29100UV 0x62: OCV_LSB_29400UV 0x63: OCV_LSB_29700UV 0x64: OCV_LSB_30000UV 0x65: OCV_LSB_30300UV 0x66: OCV_LSB_30600UV 0x67: OCV_LSB_30900UV 0x68: OCV_LSB_31200UV 0x69: OCV_LSB_31500UV 0x6A: OCV_LSB_31800UV 0x6B: OCV_LSB_32100UV 0x6C: OCV_LSB_32400UV 0x6D: OCV_LSB_32700UV 0x6E: OCV_LSB_33000UV 0x6F: OCV_LSB_33300UV 0x70: OCV_LSB_33600UV

BMS_VM_S3_S7_OCV_DATA0 (cont.)

Bits	Name	Description
		0x71: OCV_LSB_33900UV 0x72: OCV_LSB_34200UV 0x73: OCV_LSB_34500UV 0x74: OCV_LSB_34800UV 0x75: OCV_LSB_35100UV 0x76: OCV_LSB_35400UV 0x77: OCV_LSB_35700UV 0x78: OCV_LSB_36000UV 0x79: OCV_LSB_36300UV 0x7A: OCV_LSB_36600UV 0x7B: OCV_LSB_36900UV 0x7C: OCV_LSB_37200UV 0x7D: OCV_LSB_37500UV 0x7E: OCV_LSB_37800UV 0x7F: OCV_LSB_38100UV 0x80: OCV_LSB_38400UV 0x81: OCV_LSB_38700UV 0x82: OCV_LSB_39000UV 0x83: OCV_LSB_39300UV 0x84: OCV_LSB_39600UV 0x85: OCV_LSB_39900UV 0x86: OCV_LSB_40200UV 0x87: OCV_LSB_40500UV 0x88: OCV_LSB_40800UV 0x89: OCV_LSB_41100UV 0x8A: OCV_LSB_41400UV 0x8B: OCV_LSB_41700UV 0x8C: OCV_LSB_42000UV 0x8D: OCV_LSB_42300UV 0x8E: OCV_LSB_42600UV 0x8F: OCV_LSB_42900UV 0x90: OCV_LSB_43200UV 0x91: OCV_LSB_43500UV 0x92: OCV_LSB_43800UV 0x93: OCV_LSB_44100UV 0x94: OCV_LSB_44400UV 0x95: OCV_LSB_44700UV 0x96: OCV_LSB_45000UV 0x97: OCV_LSB_45300UV 0x98: OCV_LSB_45600UV 0x99: OCV_LSB_45900UV 0x9A: OCV_LSB_46200UV 0x9B: OCV_LSB_46500UV 0x9C: OCV_LSB_46800UV 0x9D: OCV_LSB_47100UV 0x9E: OCV_LSB_47400UV

BMS_VM_S3_S7_OCV_DATA0 (cont.)

Bits	Name	Description
		0x9F: OCV_LSB_47700UV 0xA0: OCV_LSB_48000UV 0xA1: OCV_LSB_48300UV 0xA2: OCV_LSB_48600UV 0xA3: OCV_LSB_48900UV 0xA4: OCV_LSB_49200UV 0xA5: OCV_LSB_49500UV 0xA6: OCV_LSB_49800UV 0xA7: OCV_LSB_50100UV 0xA8: OCV_LSB_50400UV 0xA9: OCV_LSB_50700UV 0xAA: OCV_LSB_51000UV 0xAB: OCV_LSB_51300UV 0xAC: OCV_LSB_51600UV 0xAD: OCV_LSB_51900UV 0xAE: OCV_LSB_52200UV 0xAF: OCV_LSB_52500UV 0xB0: OCV_LSB_52800UV 0xB1: OCV_LSB_53100UV 0xB2: OCV_LSB_53400UV 0xB3: OCV_LSB_53700UV 0xB4: OCV_LSB_54000UV 0xB5: OCV_LSB_54300UV 0xB6: OCV_LSB_54600UV 0xB7: OCV_LSB_54900UV 0xB8: OCV_LSB_55200UV 0xB9: OCV_LSB_55500UV 0xBA: OCV_LSB_55800UV 0xBB: OCV_LSB_56100UV 0xBC: OCV_LSB_56400UV 0xBD: OCV_LSB_56700UV 0xBE: OCV_LSB_57000UV 0xBF: OCV_LSB_57300UV 0xC0: OCV_LSB_57600UV 0xC1: OCV_LSB_57900UV 0xC2: OCV_LSB_58200UV 0xC3: OCV_LSB_58500UV 0xC4: OCV_LSB_58800UV 0xC5: OCV_LSB_59100UV 0xC6: OCV_LSB_59400UV 0xC7: OCV_LSB_59700UV 0xC8: OCV_LSB_60000UV 0xC9: OCV_LSB_60300UV 0xCA: OCV_LSB_60600UV 0xCB: OCV_LSB_60900UV 0xCC: OCV_LSB_61200UV

BMS_VM_S3_S7_OCV_DATA0 (cont.)

Bits	Name	Description
		0xCD: OCV_LSB_61500UV 0xCE: OCV_LSB_61800UV 0xCF: OCV_LSB_62100UV 0xD0: OCV_LSB_62400UV 0xD1: OCV_LSB_62700UV 0xD2: OCV_LSB_63000UV 0xD3: OCV_LSB_63300UV 0xD4: OCV_LSB_63600UV 0xD5: OCV_LSB_63900UV 0xD6: OCV_LSB_64200UV 0xD7: OCV_LSB_64500UV 0xD8: OCV_LSB_64800UV 0xD9: OCV_LSB_65100UV 0xDA: OCV_LSB_65400UV 0xDB: OCV_LSB_65700UV 0xDC: OCV_LSB_66000UV 0xDD: OCV_LSB_66300UV 0xDE: OCV_LSB_66600UV 0xDF: OCV_LSB_66900UV 0xE0: OCV_LSB_67200UV 0xE1: OCV_LSB_67500UV 0xE2: OCV_LSB_67800UV 0xE3: OCV_LSB_68100UV

BMS_VM_S3_S7_OCV_DATA0 (cont.)

Bits	Name	Description
		0xE4: OCV_LSB_68400UV 0xE5: OCV_LSB_68700UV 0xE6: OCV_LSB_69000UV 0xE7: OCV_LSB_69300UV 0xE8: OCV_LSB_69600UV 0xE9: OCV_LSB_69900UV 0xEA: OCV_LSB_70200UV 0xEB: OCV_LSB_70500UV 0xEC: OCV_LSB_70800UV 0xED: OCV_LSB_71100UV 0xEE: OCV_LSB_71400UV 0xEF: OCV_LSB_71700UV 0xF0: OCV_LSB_72000UV 0xF1: OCV_LSB_72300UV 0xF2: OCV_LSB_72600UV 0xF3: OCV_LSB_72900UV 0xF4: OCV_LSB_73200UV 0xF5: OCV_LSB_73500UV 0xF6: OCV_LSB_73800UV 0xF7: OCV_LSB_74100UV 0xF8: OCV_LSB_74400UV 0xF9: OCV_LSB_74700UV 0xFA: OCV_LSB_75000UV 0xFB: OCV_LSB_75300UV 0xFC: OCV_LSB_75600UV 0xFD: OCV_LSB_75900UV 0xFE: OCV_LSB_76200UV 0xFF: OCV_LSB_76500UV

0x0000406B BMS_VM_S3_S7_OCV_DATA1

Type: R
Clock: pbus_wrclk
Reset State: 0x00000000
Reset Name: N/A

BMS_VM_S3_S7_OCV_DATA1

Bits	Name	Description
7:0	S3_S7_OCV_15_8	DEF: X MSB of S3 and S7 OCV measurement 0x0: OCV_MSB_0UV 0x1: OCV_MSB_76800UV 0x2: OCV_MSB_153600UV 0x3: OCV_MSB_230400UV 0x4: OCV_MSB_307200UV 0x5: OCV_MSB_384000UV 0x6: OCV_MSB_460800UV 0x7: OCV_MSB_537600UV 0x8: OCV_MSB_614400UV 0x9: OCV_MSB_691200UV 0xA: OCV_MSB_768000UV 0xB: OCV_MSB_844800UV 0xC: OCV_MSB_921600UV 0xD: OCV_MSB_998400UV 0xE: OCV_MSB_1075200UV 0xF: OCV_MSB_1152000UV 0x10: OCV_MSB_1228800UV 0x11: OCV_MSB_1305600UV 0x12: OCV_MSB_1382400UV 0x13: OCV_MSB_1459200UV
		0x14: OCV_MSB_1536000UV 0x15: OCV_MSB_1612800UV 0x16: OCV_MSB_1689600UV 0x17: OCV_MSB_1766400UV 0x18: OCV_MSB_1843200UV 0x19: OCV_MSB_1920000UV 0x1A: OCV_MSB_1996800UV 0x1B: OCV_MSB_2073600UV 0x1C: OCV_MSB_2150400UV 0x1D: OCV_MSB_2227200UV 0x1E: OCV_MSB_2304000UV 0x1F: OCV_MSB_2380800UV 0x20: OCV_MSB_2457600UV 0x21: OCV_MSB_2534400UV 0x22: OCV_MSB_2611200UV 0x23: OCV_MSB_2688000UV 0x24: OCV_MSB_2764800UV 0x25: OCV_MSB_2841600UV 0x26: OCV_MSB_2918400UV 0x27: OCV_MSB_2995200UV 0x28: OCV_MSB_3072000UV 0x29: OCV_MSB_3148800UV 0x2A: OCV_MSB_3225600UV

BMS_VM_S3_S7_OCV_DATA1 (cont.)

Bits	Name	Description
		0x2B: OCV_MSB_3302400UV 0x2C: OCV_MSB_3379200UV 0x2D: OCV_MSB_3456000UV 0x2F: OCV_MSB_3609600UV 0x30: OCV_MSB_3686400UV 0x31: OCV_MSB_3763200UV 0x32: OCV_MSB_3840000UV 0x33: OCV_MSB_3916800UV 0x34: OCV_MSB_3993600UV 0x35: OCV_MSB_4070400UV 0x36: OCV_MSB_4147200UV 0x37: OCV_MSB_4224000UV 0x38: OCV_MSB_4300800UV 0x39: OCV_MSB_4377600UV 0x3A: OCV_MSB_4454400UV 0x3B: OCV_MSB_4531200UV 0x3C: OCV_MSB_4608000UV 0x3D: OCV_MSB_4684800UV 0x3E: OCV_MSB_4761600UV 0x3F: OCV_MSB_4838400UV 0x40: OCV_MSB_4915200UV 0x41: OCV_MSB_4992000UV 0x42: OCV_MSB_5068800UV 0x43: OCV_MSB_5145600UV 0x44: OCV_MSB_5222400UV 0x45: OCV_MSB_5299200UV 0x46: OCV_MSB_5376000UV 0x47: OCV_MSB_5452800UV 0x48: OCV_MSB_5529600UV 0x49: OCV_MSB_5606400UV 0x4A: OCV_MSB_5683200UV 0x4B: OCV_MSB_5760000UV 0x4C: OCV_MSB_5836800UV 0x4D: OCV_MSB_5913600UV 0x4E: OCV_MSB_5990400UV 0x4F: OCV_MSB_6067200UV 0x50: OCV_MSB_6144000UV 0x51: OCV_MSB_6220800UV 0x52: OCV_MSB_6297600UV 0x53: OCV_MSB_6374400UV 0x54: OCV_MSB_6451200UV 0x55: OCV_MSB_6528000UV 0x56: OCV_MSB_6604800UV 0x57: OCV_MSB_6681600UV 0x58: OCV_MSB_6758400UV

BMS_VM_S3_S7_OCV_DATA1 (cont.)

Bits	Name	Description
		0x59: OCV_MSB_6835200UV 0x5A: OCV_MSB_6912000UV 0x5B: OCV_MSB_6988800UV 0x5C: OCV_MSB_7065600UV 0x5D: OCV_MSB_7142400UV 0x5E: OCV_MSB_7219200UV 0x5F: OCV_MSB_7296000UV 0x60: OCV_MSB_7372800UV 0x61: OCV_MSB_7449600UV 0x62: OCV_MSB_7526400UV 0x63: OCV_MSB_7603200UV 0x64: OCV_MSB_7680000UV 0x65: OCV_MSB_7756800UV 0x66: OCV_MSB_7833600UV 0x67: OCV_MSB_7910400UV 0x68: OCV_MSB_7987200UV 0x69: OCV_MSB_8064000UV 0x6A: OCV_MSB_8140800UV 0x6B: OCV_MSB_8217600UV 0x6C: OCV_MSB_8294400UV 0x6D: OCV_MSB_8371200UV 0x6E: OCV_MSB_8448000UV 0x6F: OCV_MSB_8524800UV
		0x70: OCV_MSB_8601600UV 0x71: OCV_MSB_8678400UV 0x72: OCV_MSB_8755200UV 0x73: OCV_MSB_8832000UV 0x74: OCV_MSB_8908800UV 0x75: OCV_MSB_8985600UV 0x76: OCV_MSB_9062400UV 0x77: OCV_MSB_9139200UV 0x78: OCV_MSB_9216000UV 0x79: OCV_MSB_9292800UV 0x7A: OCV_MSB_9369600UV 0x7B: OCV_MSB_9446400UV 0x7C: OCV_MSB_9523200UV 0x7D: OCV_MSB_9600000UV 0x7E: OCV_MSB_9676800UV 0x7F: OCV_MSB_9753600UV 0x80: OCV_MSB_9830400UV 0x81: OCV_MSB_9907200UV 0x82: OCV_MSB_9984000UV 0x83: OCV_MSB_10060800UV 0x84: OCV_MSB_10137600UV 0x85: OCV_MSB_10214400UV 0x86: OCV_MSB_10291200UV

BMS_VM_S3_S7_OCV_DATA1 (cont.)

Bits	Name	Description
		0x87: OCV_MSB_10368000UV 0x88: OCV_MSB_10444800UV 0x89: OCV_MSB_10521600UV 0x8A: OCV_MSB_10598400UV 0x8B: OCV_MSB_10675200UV 0x8C: OCV_MSB_10752000UV 0x8D: OCV_MSB_10828800UV 0x8E: OCV_MSB_10905600UV 0x8F: OCV_MSB_10982400UV 0x90: OCV_MSB_11059200UV 0x91: OCV_MSB_11136000UV 0x92: OCV_MSB_11212800UV 0x93: OCV_MSB_11289600UV 0x94: OCV_MSB_11366400UV 0x95: OCV_MSB_11443200UV 0x96: OCV_MSB_11520000UV 0x97: OCV_MSB_11596800UV 0x98: OCV_MSB_11673600UV 0x99: OCV_MSB_11750400UV 0x9A: OCV_MSB_11827200UV 0x9B: OCV_MSB_11904000UV 0x9C: OCV_MSB_11980800UV 0x9D: OCV_MSB_12057600UV 0x9E: OCV_MSB_12134400UV 0x9F: OCV_MSB_12211200UV 0xA0: OCV_MSB_12288000UV 0xA1: OCV_MSB_12364800UV 0xA2: OCV_MSB_12441600UV 0xA3: OCV_MSB_12518400UV 0xA4: OCV_MSB_12595200UV 0xA5: OCV_MSB_12672000UV 0xA6: OCV_MSB_12748800UV 0xA7: OCV_MSB_12825600UV 0xA8: OCV_MSB_12902400UV 0xA9: OCV_MSB_12979200UV 0xAA: OCV_MSB_13056000UV 0xAB: OCV_MSB_13132800UV 0xAC: OCV_MSB_13209600UV 0xAD: OCV_MSB_13286400UV 0xAE: OCV_MSB_13363200UV 0xAF: OCV_MSB_13440000UV 0xB0: OCV_MSB_13516800UV 0xB1: OCV_MSB_13593600UV 0xB2: OCV_MSB_13670400UV 0xB3: OCV_MSB_13747200UV

BMS_VM_S3_S7_OCV_DATA1 (cont.)

Bits	Name	Description
		0xB4: OCV_MSB_13824000UV 0xB5: OCV_MSB_13900800UV 0xB6: OCV_MSB_13977600UV 0xB7: OCV_MSB_14054400UV 0xB8: OCV_MSB_14131200UV 0xB9: OCV_MSB_14208000UV 0xBA: OCV_MSB_14284800UV 0xBB: OCV_MSB_14361600UV 0xBC: OCV_MSB_14438400UV 0xBD: OCV_MSB_14515200UV 0xBE: OCV_MSB_14592000UV 0xBF: OCV_MSB_14668800UV 0xC0: OCV_MSB_14745600UV 0xC1: OCV_MSB_14822400UV 0xC2: OCV_MSB_14899200UV 0xC3: OCV_MSB_14976000UV 0xC4: OCV_MSB_15052800UV 0xC5: OCV_MSB_15129600UV 0xC6: OCV_MSB_15206400UV 0xC7: OCV_MSB_15283200UV 0xC8: OCV_MSB_15360000UV 0xC9: OCV_MSB_15436800UV 0xCA: OCV_MSB_15513600UV
		0xCB: OCV_MSB_15590400UV 0xCC: OCV_MSB_15667200UV 0xCD: OCV_MSB_15744000UV 0xCE: OCV_MSB_15820800UV 0xCF: OCV_MSB_15897600UV 0xD0: OCV_MSB_15974400UV 0xD1: OCV_MSB_16051200UV 0xD2: OCV_MSB_16128000UV 0xD3: OCV_MSB_16204800UV 0xD4: OCV_MSB_16281600UV 0xD5: OCV_MSB_16358400UV 0xD6: OCV_MSB_16435200UV 0xD7: OCV_MSB_16512000UV 0xD8: OCV_MSB_16588800UV 0xD9: OCV_MSB_16665600UV 0xDA: OCV_MSB_16742400UV 0xDB: OCV_MSB_16819200UV 0xDC: OCV_MSB_16896000UV 0xDD: OCV_MSB_16972800UV 0xDE: OCV_MSB_17049600UV 0xDF: OCV_MSB_17126400UV 0xE0: OCV_MSB_17203200UV 0xE1: OCV_MSB_17280000UV

BMS_VM_S3_S7_OCV_DATA1 (cont.)

Bits	Name	Description
		0xE2: OCV_MSB_17356800UV 0xE3: OCV_MSB_17433600UV 0xE4: OCV_MSB_17510400UV 0xE5: OCV_MSB_17587200UV 0xE6: OCV_MSB_17664000UV 0xE7: OCV_MSB_17740800UV 0xE8: OCV_MSB_17817600UV 0xE9: OCV_MSB_17894400UV 0xEA: OCV_MSB_17971200UV 0xEB: OCV_MSB_18048000UV 0xEC: OCV_MSB_18124800UV 0xED: OCV_MSB_18201600UV 0xEE: OCV_MSB_18278400UV 0xEF: OCV_MSB_18355200UV 0xF0: OCV_MSB_18432000UV 0xF1: OCV_MSB_18508800UV 0xF2: OCV_MSB_18585600UV 0xF3: OCV_MSB_18662400UV 0xF4: OCV_MSB_18739200UV 0xF5: OCV_MSB_18816000UV 0xF6: OCV_MSB_18892800UV 0xF7: OCV_MSB_18969600UV 0xF8: OCV_MSB_19046400UV 0xF9: OCV_MSB_19123200UV 0xFA: OCV_MSB_19200000UV 0xFB: OCV_MSB_19276800UV 0xFC: OCV_MSB_19353600UV 0xFD: OCV_MSB_19430400UV 0xFE: OCV_MSB_19507200UV 0xFF: OCV_MSB_19584000UV

0x0000406C BMS_VM_S3_LAST_OCV_DATA0

Type: R
Clock: pbus_wrclk
Reset State: 0x00000000
Reset Name: N/A

BMS_VM_S3_LAST_OCV_DATA0

Bits	Name	Description
7:0	S3_LAST_OCV_7_0	DEF: X Latched version for LSB of S3 last OCV measurement. SW need to do a dummy write to STATUS1 register to latch the data before read back, otherwise its value is not updated. 0x0: OCV_LSB_0UV 0x1: OCV_LSB_300UV 0x2: OCV_LSB_600UV 0x3: OCV_LSB_900UV 0x4: OCV_LSB_1200UV 0x5: OCV_LSB_1500UV 0x6: OCV_LSB_1800UV 0x7: OCV_LSB_2100UV 0x8: OCV_LSB_2400UV 0x9: OCV_LSB_2700UV 0xA: OCV_LSB_3000UV 0xB: OCV_LSB_3300UV 0xC: OCV_LSB_3600UV 0xD: OCV_LSB_3900UV 0xE: OCV_LSB_4200UV 0xF: OCV_LSB_4500UV 0x10: OCV_LSB_4800UV 0x11: OCV_LSB_5100UV 0x12: OCV_LSB_5400UV 0x13: OCV_LSB_5700UV 0x14: OCV_LSB_6000UV

BMS_VM_S3_LAST_OCV_DATA0 (cont.)

Bits	Name	Description
		0x15: OCV_LSB_6300UV 0x16: OCV_LSB_6600UV 0x17: OCV_LSB_6900UV 0x18: OCV_LSB_7200UV 0x19: OCV_LSB_7500UV 0x1A: OCV_LSB_7800UV 0x1B: OCV_LSB_8100UV 0x1C: OCV_LSB_8400UV 0x1D: OCV_LSB_8700UV 0x1E: OCV_LSB_9000UV 0x1F: OCV_LSB_9300UV 0x20: OCV_LSB_9600UV 0x21: OCV_LSB_9900UV 0x22: OCV_LSB_10200UV 0x23: OCV_LSB_10500UV 0x24: OCV_LSB_10800UV 0x25: OCV_LSB_11100UV 0x26: OCV_LSB_11400UV 0x27: OCV_LSB_11700UV 0x28: OCV_LSB_12000UV 0x29: OCV_LSB_12300UV 0x2A: OCV_LSB_12600UV 0x2B: OCV_LSB_12900UV 0x2C: OCV_LSB_13200UV 0x2D: OCV_LSB_13500UV 0x2E: OCV_LSB_13800UV 0x2F: OCV_LSB_14100UV 0x30: OCV_LSB_14400UV 0x31: OCV_LSB_14700UV 0x32: OCV_LSB_15000UV 0x33: OCV_LSB_15300UV 0x34: OCV_LSB_15600UV 0x35: OCV_LSB_15900UV 0x36: OCV_LSB_16200UV 0x37: OCV_LSB_16500UV 0x38: OCV_LSB_16800UV 0x39: OCV_LSB_17100UV 0x3A: OCV_LSB_17400UV 0x3B: OCV_LSB_17700UV 0x3C: OCV_LSB_18000UV 0x3D: OCV_LSB_18300UV 0x3E: OCV_LSB_18600UV 0x3F: OCV_LSB_18900UV 0x40: OCV_LSB_19200UV 0x41: OCV_LSB_19500UV 0x42: OCV_LSB_19800UV

BMS_VM_S3_LAST_OCV_DATA0 (cont.)

Bits	Name	Description
		0x43: OCV_LSB_20100UV 0x44: OCV_LSB_20400UV 0x45: OCV_LSB_20700UV 0x46: OCV_LSB_21000UV 0x47: OCV_LSB_21300UV 0x48: OCV_LSB_21600UV 0x49: OCV_LSB_21900UV 0x4A: OCV_LSB_22200UV 0x4B: OCV_LSB_22500UV 0x4C: OCV_LSB_22800UV 0x4D: OCV_LSB_23100UV 0x4E: OCV_LSB_23400UV 0x4F: OCV_LSB_23700UV 0x50: OCV_LSB_24000UV 0x51: OCV_LSB_24300UV 0x52: OCV_LSB_24600UV 0x53: OCV_LSB_24900UV 0x54: OCV_LSB_25200UV 0x55: OCV_LSB_25500UV 0x56: OCV_LSB_25800UV 0x57: OCV_LSB_26100UV 0x58: OCV_LSB_26400UV 0x59: OCV_LSB_26700UV
		0x5A: OCV_LSB_27000UV 0x5B: OCV_LSB_27300UV 0x5C: OCV_LSB_27600UV 0x5D: OCV_LSB_27900UV 0x5E: OCV_LSB_28200UV 0x5F: OCV_LSB_28500UV 0x60: OCV_LSB_28800UV 0x61: OCV_LSB_29100UV 0x62: OCV_LSB_29400UV 0x63: OCV_LSB_29700UV 0x64: OCV_LSB_30000UV 0x65: OCV_LSB_30300UV 0x66: OCV_LSB_30600UV 0x67: OCV_LSB_30900UV 0x68: OCV_LSB_31200UV 0x69: OCV_LSB_31500UV 0x6A: OCV_LSB_31800UV 0x6B: OCV_LSB_32100UV 0x6C: OCV_LSB_32400UV 0x6D: OCV_LSB_32700UV 0x6E: OCV_LSB_33000UV 0x6F: OCV_LSB_33300UV 0x70: OCV_LSB_33600UV

BMS_VM_S3_LAST_OCV_DATA0 (cont.)

Bits	Name	Description
		0x71: OCV_LSB_33900UV 0x72: OCV_LSB_34200UV 0x73: OCV_LSB_34500UV 0x74: OCV_LSB_34800UV 0x75: OCV_LSB_35100UV 0x76: OCV_LSB_35400UV 0x77: OCV_LSB_35700UV 0x78: OCV_LSB_36000UV 0x79: OCV_LSB_36300UV 0x7A: OCV_LSB_36600UV 0x7B: OCV_LSB_36900UV 0x7C: OCV_LSB_37200UV 0x7D: OCV_LSB_37500UV 0x7E: OCV_LSB_37800UV 0x7F: OCV_LSB_38100UV 0x80: OCV_LSB_38400UV 0x81: OCV_LSB_38700UV 0x82: OCV_LSB_39000UV 0x83: OCV_LSB_39300UV 0x84: OCV_LSB_39600UV 0x85: OCV_LSB_39900UV 0x86: OCV_LSB_40200UV 0x87: OCV_LSB_40500UV 0x88: OCV_LSB_40800UV 0x89: OCV_LSB_41100UV 0x8A: OCV_LSB_41400UV 0x8B: OCV_LSB_41700UV 0x8C: OCV_LSB_42000UV 0x8D: OCV_LSB_42300UV 0x8E: OCV_LSB_42600UV 0x8F: OCV_LSB_42900UV 0x90: OCV_LSB_43200UV 0x91: OCV_LSB_43500UV 0x92: OCV_LSB_43800UV 0x93: OCV_LSB_44100UV 0x94: OCV_LSB_44400UV 0x95: OCV_LSB_44700UV 0x96: OCV_LSB_45000UV 0x97: OCV_LSB_45300UV 0x98: OCV_LSB_45600UV 0x99: OCV_LSB_45900UV 0x9A: OCV_LSB_46200UV 0x9B: OCV_LSB_46500UV 0x9C: OCV_LSB_46800UV 0x9D: OCV_LSB_47100UV 0x9E: OCV_LSB_47400UV

BMS_VM_S3_LAST_OCV_DATA0 (cont.)

Bits	Name	Description
		0x9F: OCV_LSB_47700UV 0xA0: OCV_LSB_48000UV 0xA1: OCV_LSB_48300UV 0xA2: OCV_LSB_48600UV 0xA3: OCV_LSB_48900UV 0xA4: OCV_LSB_49200UV 0xA5: OCV_LSB_49500UV 0xA6: OCV_LSB_49800UV 0xA7: OCV_LSB_50100UV 0xA8: OCV_LSB_50400UV 0xA9: OCV_LSB_50700UV 0xAA: OCV_LSB_51000UV 0xAB: OCV_LSB_51300UV 0xAC: OCV_LSB_51600UV 0xAD: OCV_LSB_51900UV 0xAE: OCV_LSB_52200UV 0xAF: OCV_LSB_52500UV 0xB0: OCV_LSB_52800UV 0xB1: OCV_LSB_53100UV 0xB2: OCV_LSB_53400UV 0xB3: OCV_LSB_53700UV 0xB4: OCV_LSB_54000UV 0xB5: OCV_LSB_54300UV
		0xB6: OCV_LSB_54600UV 0xB7: OCV_LSB_54900UV 0xB8: OCV_LSB_55200UV 0xB9: OCV_LSB_55500UV 0xBA: OCV_LSB_55800UV 0xBB: OCV_LSB_56100UV 0xBC: OCV_LSB_56400UV 0xBD: OCV_LSB_56700UV 0xBE: OCV_LSB_57000UV 0xBF: OCV_LSB_57300UV 0xC0: OCV_LSB_57600UV 0xC1: OCV_LSB_57900UV 0xC2: OCV_LSB_58200UV 0xC3: OCV_LSB_58500UV 0xC4: OCV_LSB_58800UV 0xC5: OCV_LSB_59100UV 0xC6: OCV_LSB_59400UV 0xC7: OCV_LSB_59700UV 0xC8: OCV_LSB_60000UV 0xC9: OCV_LSB_60300UV 0xCA: OCV_LSB_60600UV 0xCB: OCV_LSB_60900UV 0xCC: OCV_LSB_61200UV

BMS_VM_S3_LAST_OCV_DATA0 (cont.)

Bits	Name	Description
		0xCD: OCV_LSB_61500UV 0xCE: OCV_LSB_61800UV 0xCF: OCV_LSB_62100UV 0xD0: OCV_LSB_62400UV 0xD1: OCV_LSB_62700UV 0xD2: OCV_LSB_63000UV 0xD3: OCV_LSB_63300UV 0xD4: OCV_LSB_63600UV 0xD5: OCV_LSB_63900UV 0xD6: OCV_LSB_64200UV 0xD7: OCV_LSB_64500UV 0xD8: OCV_LSB_64800UV 0xD9: OCV_LSB_65100UV 0xDA: OCV_LSB_65400UV 0xDB: OCV_LSB_65700UV 0xDC: OCV_LSB_66000UV 0xDD: OCV_LSB_66300UV 0xDE: OCV_LSB_66600UV 0xDF: OCV_LSB_66900UV 0xE0: OCV_LSB_67200UV 0xE1: OCV_LSB_67500UV 0xE2: OCV_LSB_67800UV 0xE3: OCV_LSB_68100UV 0xE4: OCV_LSB_68400UV 0xE5: OCV_LSB_68700UV 0xE6: OCV_LSB_69000UV 0xE7: OCV_LSB_69300UV 0xE8: OCV_LSB_69600UV 0xE9: OCV_LSB_69900UV 0xEA: OCV_LSB_70200UV 0xEB: OCV_LSB_70500UV 0xEC: OCV_LSB_70800UV 0xED: OCV_LSB_71100UV 0xEE: OCV_LSB_71400UV 0xEF: OCV_LSB_71700UV 0xF0: OCV_LSB_72000UV 0xF1: OCV_LSB_72300UV 0xF2: OCV_LSB_72600UV 0xF3: OCV_LSB_72900UV 0xF4: OCV_LSB_73200UV 0xF5: OCV_LSB_73500UV 0xF6: OCV_LSB_73800UV 0xF7: OCV_LSB_74100UV 0xF8: OCV_LSB_74400UV 0xF9: OCV_LSB_74700UV 0xFA: OCV_LSB_75000UV

BMS_VM_S3_LAST_OCV_DATA0 (cont.)

Bits	Name	Description
		0xFB: OCV_LSB_75300UV 0xFC: OCV_LSB_75600UV 0xFD: OCV_LSB_75900UV 0xFE: OCV_LSB_76200UV 0xFF: OCV_LSB_76500UV

0x0000406D BMS_VM_S3_LAST_OCV_DATA1

Type: R
Clock: pbus_wrclk
Reset State: 0x00000000
Reset Name: N/A

BMS_VM_S3_LAST_OCV_DATA1

Bits	Name	Description
7:0	S3_LAST_OCV_15_8	DEF: X Latched version for MSB of S3 last OCV measurement. SW need to do a dummy write to STATUS1 register to latch the data before read back, otherwise its value is not updated. 0x0: OCV_MSB_0UV 0x1: OCV_MSB_76800UV 0x2: OCV_MSB_153600UV 0x3: OCV_MSB_230400UV 0x4: OCV_MSB_307200UV 0x5: OCV_MSB_384000UV 0x6: OCV_MSB_460800UV 0x7: OCV_MSB_537600UV 0x8: OCV_MSB_614400UV 0x9: OCV_MSB_691200UV 0xA: OCV_MSB_768000UV 0xB: OCV_MSB_844800UV 0xC: OCV_MSB_921600UV 0xD: OCV_MSB_998400UV 0xE: OCV_MSB_1075200UV 0xF: OCV_MSB_1152000UV 0x10: OCV_MSB_1228800UV 0x11: OCV_MSB_1305600UV 0x12: OCV_MSB_1382400UV 0x13: OCV_MSB_1459200UV 0x14: OCV_MSB_1536000UV

BMS_VM_S3_LAST_OCV_DATA1 (cont.)

Bits	Name	Description
		0x15: OCV_MSB_1612800UV 0x16: OCV_MSB_1689600UV 0x17: OCV_MSB_1766400UV 0x18: OCV_MSB_1843200UV 0x19: OCV_MSB_1920000UV 0x1A: OCV_MSB_1996800UV 0x1B: OCV_MSB_2073600UV 0x1C: OCV_MSB_2150400UV 0x1D: OCV_MSB_2227200UV 0x1E: OCV_MSB_2304000UV 0x1F: OCV_MSB_2380800UV 0x20: OCV_MSB_2457600UV 0x21: OCV_MSB_2534400UV 0x22: OCV_MSB_2611200UV 0x23: OCV_MSB_2688000UV 0x24: OCV_MSB_2764800UV 0x25: OCV_MSB_2841600UV 0x26: OCV_MSB_2918400UV 0x27: OCV_MSB_2995200UV 0x28: OCV_MSB_3072000UV 0x29: OCV_MSB_3148800UV 0x2A: OCV_MSB_3225600UV 0x2B: OCV_MSB_3302400UV 0x2C: OCV_MSB_3379200UV 0x2D: OCV_MSB_3456000UV 0x2E: OCV_MSB_3532800UV 0x2F: OCV_MSB_3609600UV 0x30: OCV_MSB_3686400UV 0x31: OCV_MSB_3763200UV 0x32: OCV_MSB_3840000UV 0x33: OCV_MSB_3916800UV 0x34: OCV_MSB_3993600UV 0x35: OCV_MSB_4070400UV 0x36: OCV_MSB_4147200UV 0x37: OCV_MSB_4224000UV 0x38: OCV_MSB_4300800UV 0x39: OCV_MSB_4377600UV 0x3A: OCV_MSB_4454400UV 0x3B: OCV_MSB_4531200UV 0x3C: OCV_MSB_4608000UV 0x3D: OCV_MSB_4684800UV 0x3E: OCV_MSB_4761600UV 0x3F: OCV_MSB_4838400UV 0x40: OCV_MSB_4915200UV 0x41: OCV_MSB_4992000UV 0x42: OCV_MSB_5068800UV

BMS_VM_S3_LAST_OCV_DATA1 (cont.)

Bits	Name	Description
		0x43: OCV_MSB_5145600UV 0x44: OCV_MSB_5222400UV 0x45: OCV_MSB_5299200UV 0x46: OCV_MSB_5376000UV 0x47: OCV_MSB_5452800UV 0x48: OCV_MSB_5529600UV 0x49: OCV_MSB_5606400UV 0x4A: OCV_MSB_5683200UV 0x4B: OCV_MSB_5760000UV 0x4C: OCV_MSB_5836800UV 0x4D: OCV_MSB_5913600UV 0x4E: OCV_MSB_5990400UV 0x4F: OCV_MSB_6067200UV 0x50: OCV_MSB_6144000UV 0x51: OCV_MSB_6220800UV 0x52: OCV_MSB_6297600UV 0x53: OCV_MSB_6374400UV 0x54: OCV_MSB_6451200UV 0x55: OCV_MSB_6528000UV 0x56: OCV_MSB_6604800UV 0x57: OCV_MSB_6681600UV 0x58: OCV_MSB_6758400UV 0x59: OCV_MSB_6835200UV
		0x5A: OCV_MSB_6912000UV 0x5B: OCV_MSB_6988800UV 0x5C: OCV_MSB_7065600UV 0x5D: OCV_MSB_7142400UV 0x5E: OCV_MSB_7219200UV 0x60: OCV_MSB_7372800UV 0x61: OCV_MSB_7449600UV 0x62: OCV_MSB_7526400UV 0x63: OCV_MSB_7603200UV 0x64: OCV_MSB_7680000UV 0x65: OCV_MSB_7756800UV 0x66: OCV_MSB_7833600UV 0x67: OCV_MSB_7910400UV 0x68: OCV_MSB_7987200UV 0x69: OCV_MSB_8064000UV 0x6A: OCV_MSB_8140800UV 0x6B: OCV_MSB_8217600UV 0x6C: OCV_MSB_8294400UV 0x6D: OCV_MSB_8371200UV 0x6E: OCV_MSB_8448000UV 0x6F: OCV_MSB_8524800UV 0x70: OCV_MSB_8601600UV

BMS_VM_S3_LAST_OCV_DATA1 (cont.)

Bits	Name	Description
		0x71: OCV_MSB_8678400UV 0x72: OCV_MSB_8755200UV 0x73: OCV_MSB_8832000UV 0x75: OCV_MSB_8985600UV 0x76: OCV_MSB_9062400UV 0x77: OCV_MSB_9139200UV 0x78: OCV_MSB_9216000UV 0x79: OCV_MSB_9292800UV 0x7A: OCV_MSB_9369600UV 0x7B: OCV_MSB_9446400UV 0x7C: OCV_MSB_9523200UV 0x7D: OCV_MSB_9600000UV 0x7E: OCV_MSB_9676800UV 0x7F: OCV_MSB_9753600UV 0x80: OCV_MSB_9830400UV 0x81: OCV_MSB_9907200UV 0x82: OCV_MSB_9984000UV 0x83: OCV_MSB_10060800UV 0x84: OCV_MSB_10137600UV 0x85: OCV_MSB_10214400UV 0x86: OCV_MSB_10291200UV 0x87: OCV_MSB_10368000UV 0x8C: OCV_MSB_10752000UV
		0x88: OCV_MSB_10444800UV 0x89: OCV_MSB_10521600UV 0x8A: OCV_MSB_10598400UV 0x8B: OCV_MSB_10675200UV 0x8D: OCV_MSB_10828800UV 0x8E: OCV_MSB_10905600UV 0x8F: OCV_MSB_10982400UV 0x90: OCV_MSB_11059200UV 0x91: OCV_MSB_11136000UV 0x92: OCV_MSB_11212800UV 0x93: OCV_MSB_11289600UV 0x94: OCV_MSB_11366400UV 0x95: OCV_MSB_11443200UV 0x96: OCV_MSB_11520000UV 0x97: OCV_MSB_11596800UV 0x98: OCV_MSB_11673600UV 0x99: OCV_MSB_11750400UV 0x9A: OCV_MSB_11827200UV 0x9B: OCV_MSB_11904000UV 0x9C: OCV_MSB_11980800UV 0x9D: OCV_MSB_12057600UV 0x9E: OCV_MSB_12134400UV 0x9F: OCV_MSB_12211200UV

BMS_VM_S3_LAST_OCV_DATA1 (cont.)

Bits	Name	Description
		0xA0: OCV_MSB_12288000UV 0xA1: OCV_MSB_12364800UV 0xA2: OCV_MSB_12441600UV 0xA3: OCV_MSB_12518400UV 0xA4: OCV_MSB_12595200UV 0xA5: OCV_MSB_12672000UV 0xA6: OCV_MSB_12748800UV 0xA7: OCV_MSB_12825600UV 0xA8: OCV_MSB_12902400UV 0xA9: OCV_MSB_12979200UV 0xAA: OCV_MSB_13056000UV 0xAB: OCV_MSB_13132800UV 0xAC: OCV_MSB_13209600UV 0xAD: OCV_MSB_13286400UV 0xAE: OCV_MSB_13363200UV 0xAF: OCV_MSB_13440000UV 0xB0: OCV_MSB_13516800UV 0xB1: OCV_MSB_13593600UV 0xB2: OCV_MSB_13670400UV 0xB3: OCV_MSB_13747200UV 0xB4: OCV_MSB_13824000UV 0xB5: OCV_MSB_13900800UV 0xB6: OCV_MSB_13977600UV
		0xB7: OCV_MSB_14054400UV 0xB8: OCV_MSB_14131200UV 0xB9: OCV_MSB_14208000UV 0xBA: OCV_MSB_14284800UV 0xBB: OCV_MSB_14361600UV 0xBC: OCV_MSB_14438400UV 0xBD: OCV_MSB_14515200UV 0xBE: OCV_MSB_14592000UV 0xBF: OCV_MSB_14668800UV 0xC0: OCV_MSB_14745600UV 0xC1: OCV_MSB_14822400UV 0xC2: OCV_MSB_14899200UV 0xC3: OCV_MSB_14976000UV 0xC4: OCV_MSB_15052800UV 0xC5: OCV_MSB_15129600UV 0xC6: OCV_MSB_15206400UV 0xC7: OCV_MSB_15283200UV 0xC8: OCV_MSB_15360000UV 0xC9: OCV_MSB_15436800UV 0xCA: OCV_MSB_15513600UV 0xCB: OCV_MSB_15590400UV 0xCC: OCV_MSB_15667200UV 0xCD: OCV_MSB_15744000UV

BMS_VM_S3_LAST_OCV_DATA1 (cont.)

Bits	Name	Description
		0xCE: OCV_MSB_15820800UV 0xCF: OCV_MSB_15897600UV 0xD0: OCV_MSB_15974400UV 0xD1: OCV_MSB_16051200UV 0xD2: OCV_MSB_16128000UV 0xD3: OCV_MSB_16204800UV 0xD4: OCV_MSB_16281600UV 0xD5: OCV_MSB_16358400UV 0xD6: OCV_MSB_16435200UV 0xD7: OCV_MSB_16512000UV 0xD8: OCV_MSB_16588800UV 0xD9: OCV_MSB_16665600UV 0xDA: OCV_MSB_16742400UV 0xDB: OCV_MSB_16819200UV 0xDC: OCV_MSB_16896000UV 0xDD: OCV_MSB_16972800UV 0xDE: OCV_MSB_17049600UV 0xDF: OCV_MSB_17126400UV 0xE0: OCV_MSB_17203200UV 0xE1: OCV_MSB_17280000UV 0xE2: OCV_MSB_17356800UV 0xE3: OCV_MSB_17433600UV 0xE4: OCV_MSB_17510400UV 0xE5: OCV_MSB_17587200UV 0xE6: OCV_MSB_17664000UV 0xE7: OCV_MSB_17740800UV 0xE8: OCV_MSB_17817600UV 0xE9: OCV_MSB_17894400UV 0xEA: OCV_MSB_17971200UV 0xEB: OCV_MSB_18048000UV 0xEC: OCV_MSB_18124800UV 0xED: OCV_MSB_18201600UV 0xEE: OCV_MSB_18278400UV 0xEF: OCV_MSB_18355200UV 0xF0: OCV_MSB_18432000UV 0xF1: OCV_MSB_18508800UV 0xF2: OCV_MSB_18585600UV 0xF3: OCV_MSB_18662400UV 0xF4: OCV_MSB_18739200UV 0xF5: OCV_MSB_18816000UV 0xF6: OCV_MSB_18892800UV 0xF7: OCV_MSB_18969600UV 0xF8: OCV_MSB_19046400UV 0xF9: OCV_MSB_19123200UV 0xFA: OCV_MSB_19200000UV 0xFB: OCV_MSB_19276800UV

BMS_VM_S3_LAST_OCV_DATA1 (cont.)

Bits	Name	Description
		0xFC: OCV_MSB_19353600UV 0xFC: OCV_MSB_19353600UV 0xFD: OCV_MSB_19430400UV 0xFD: OCV_MSB_19430400UV 0xFE: OCV_MSB_19507200UV 0xFE: OCV_MSB_19507200UV 0xFF: OCV_MSB_19584000UV 0xFF: OCV_MSB_19584000UV

0x000040B0 BMS_VM_BMS_DATA_REG_0

Type: RW
Clock: pbus_wrclk
Reset State: 0xFF
Reset Name: dVdd_rb

BMS_VM_BMS_DATA_REG_0

Bits	Name	Description
7:0	BMS_DATA_REG_0	Data storage location for BMS - Does not connect to any circuitry

0x000040B1 BMS_VM_BMS_DATA_REG_1

Type: RW
Clock: pbus_wrclk
Reset State: 0xFF
Reset Name: dVdd_rb

BMS_VM_BMS_DATA_REG_1

Bits	Name	Description
7:0	BMS_DATA_REG_1	Data storage location for BMS - Does not connect to any circuitry

0x000040B2 BMS_VM_BMS_DATA_REG_2

Type: RW
Clock: pbus_wrclk
Reset State: 0xFF
Reset Name: dVdd_rb

BMS_VM_BMS_DATA_REG_2

Bits	Name	Description
7:0	BMS_DATA_REG_2	Data storage location for BMS - Does not connect to any circuitry

0x000040B3 BMS_VM_BMS_DATA_REG_3

Type: RW
Clock: pbus_wrclk
Reset State: 0xFF
Reset Name: dVdd_rb

BMS_VM_BMS_DATA_REG_3

Bits	Name	Description
7:0	BMS_DATA_REG_3	Data storage location for BMS - Does not connect to any circuitry

0x000040B4 BMS_VM_BMS_DATA_REG_4

Type: RW
Clock: pbus_wrclk
Reset State: 0xFF
Reset Name: dVdd_rb

BMS_VM_BMS_DATA_REG_4

Bits	Name	Description
7:0	BMS_DATA_REG_4	Data storage location for BMS - Does not connect to any circuitry

0x000040B5 BMS_VM_BMS_DATA_REG_5

Type: RW
Clock: pbus_wrclk
Reset State: 0xFF
Reset Name: dVdd_rb

BMS_VM_BMS_DATA_REG_5

Bits	Name	Description
7:0	BMS_DATA_REG_5	Data storage location for BMS - Does not connect to any circuitry

0x000040B6 BMS_VM_BMS_DATA_REG_6

Type: RW
Clock: pbus_wrclk
Reset State: 0xFF
Reset Name: dVdd_rb

BMS_VM_BMS_DATA_REG_6

Bits	Name	Description
7:0	BMS_DATA_REG_6	Data storage location for BMS - Does not connect to any circuitry

0x000040B7 BMS_VM_BMS_DATA_REG_7

Type: RW
Clock: pbus_wrclk
Reset State: 0xFF
Reset Name: dVdd_rb

BMS_VM_BMS_DATA_REG_7

Bits	Name	Description
7:0	BMS_DATA_REG_7	Data storage location for BMS - Does not connect to any circuitry

0x000040B8 BMS_VM_BMS_DATA_REG_8

Type: RW
Clock: pbus_wrclk
Reset State: 0xFF
Reset Name: dVdd_rb

BMS_VM_BMS_DATA_REG_8

Bits	Name	Description
7:0	BMS_DATA_REG_8	Data storage location for BMS - Does not connect to any circuitry

0x000040B9 BMS_VM_BMS_DATA_REG_9

Type: RW
Clock: pbus_wrclk
Reset State: 0xFF
Reset Name: dVdd_rb

BMS_VM_BMS_DATA_REG_9

Bits	Name	Description
7:0	BMS_DATA_REG_9	Data storage location for BMS - Does not connect to any circuitry

0x000040C0 BMS_VM_BMS_FIFO_REG_0_LSB

Type: R
Clock: pbus_wrclk
Reset State: 0xFF
Reset Name: PERPH_RB

BMS_VM_BMS_FIFO_REG_0_LSB

Bits	Name	Description
7:0	BMS_FIFO_REG_0_LSB	FIFO for storing the averaged value by BMS digital (Normal Operation & Early Truncation)

0x000040C1 BMS_VM_BMS_FIFO_REG_0_MSB

Type: R
Clock: pbus_wrclk
Reset State: 0xFF
Reset Name: PERPH_RB

BMS_VM_BMS_FIFO_REG_0_MSB

Bits	Name	Description
7:0	BMS_FIFO_REG_0_MSB	FIFO for storing the averaged value by BMS digital (Normal Operation & Early Truncation)

0x000040C2 BMS_VM_BMS_FIFO_REG_1_LSB

Type: R
Clock: pbus_wrclk
Reset State: 0xFF
Reset Name: PERPH_RB

BMS_VM_BMS_FIFO_REG_1_LSB

Bits	Name	Description
7:0	BMS_FIFO_REG_1_LSB	FIFO for storing the averaged value by BMS digital (Normal Operation & Early Truncation)

0x000040C3 BMS_VM_BMS_FIFO_REG_1_MSB

Type: R
Clock: pbus_wrclk
Reset State: 0xFF
Reset Name: PERPH_RB

BMS_VM_BMS_FIFO_REG_1_MSB

Bits	Name	Description
7:0	BMS_FIFO_REG_1_MSB	FIFO for storing the averaged value by BMS digital (Normal Operation & Early Truncation)

0x000040C4 BMS_VM_BMS_FIFO_REG_2_LSB

Type: R
Clock: pbus_wrclk
Reset State: 0xFF
Reset Name: PERPH_RB

BMS_VM_BMS_FIFO_REG_2_LSB

Bits	Name	Description
7:0	BMS_FIFO_REG_2_LSB	FIFO for storing the averaged value by BMS digital (Normal Operation & Early Truncation)

0x000040C5 BMS_VM_BMS_FIFO_REG_2_MSB

Type: R
Clock: pbus_wrclk
Reset State: 0xFF
Reset Name: PERPH_RB

BMS_VM_BMS_FIFO_REG_2_MSB

Bits	Name	Description
7:0	BMS_FIFO_REG_2_MSB	FIFO for storing the averaged value by BMS digital (Normal Operation & Early Truncation)

0x000040C6 BMS_VM_BMS_FIFO_REG_3_LSB

Type: R
Clock: pbus_wrclk
Reset State: 0xFF
Reset Name: PERPH_RB

BMS_VM_BMS_FIFO_REG_3_LSB

Bits	Name	Description
7:0	BMS_FIFO_REG_3_LSB	FIFO for storing the averaged value by BMS digital (Normal Operation & Early Truncation)

0x000040C7 BMS_VM_BMS_FIFO_REG_3_MSB

Type: R
Clock: pbus_wrclk
Reset State: 0xFF
Reset Name: PERPH_RB

BMS_VM_BMS_FIFO_REG_3_MSB

Bits	Name	Description
7:0	BMS_FIFO_REG_3_MSB	FIFO for storing the averaged value by BMS digital (Normal Operation & Early Truncation)

0x000040C8 BMS_VM_BMS_FIFO_REG_4_LSB

Type: R
Clock: pbus_wrclk
Reset State: 0xFF
Reset Name: PERPH_RB

BMS_VM_BMS_FIFO_REG_4_LSB

Bits	Name	Description
7:0	BMS_FIFO_REG_4_LSB	FIFO for storing the averaged value by BMS digital (Normal Operation & Early Truncation)

0x000040C9 BMS_VM_BMS_FIFO_REG_4_MSB

Type: R
Clock: pbus_wrclk
Reset State: 0xFF
Reset Name: PERPH_RB

BMS_VM_BMS_FIFO_REG_4_MSB

Bits	Name	Description
7:0	BMS_FIFO_REG_4_MSB	FIFO for storing the averaged value by BMS digital (Normal Operation & Early Truncation)

0x000040CA BMS_VM_BMS_FIFO_REG_5_LSB

Type: R
Clock: pbus_wrclk
Reset State: 0xFF
Reset Name: PERPH_RB

BMS_VM_BMS_FIFO_REG_5_LSB

Bits	Name	Description
7:0	BMS_FIFO_REG_5_LSB	FIFO for storing the averaged value by BMS digital (Normal Operation & Early Truncation)

0x000040CB BMS_VM_BMS_FIFO_REG_5_MSB

Type: R
Clock: pbus_wrclk
Reset State: 0xFF
Reset Name: PERPH_RB

BMS_VM_BMS_FIFO_REG_5_MSB

Bits	Name	Description
7:0	BMS_FIFO_REG_5_MSB	FIFO for storing the averaged value by BMS digital (Normal Operation & Early Truncation)

0x000040CC BMS_VM_BMS_FIFO_REG_6_LSB

Type: R
Clock: pbus_wrclk
Reset State: 0xFF
Reset Name: PERPH_RB

BMS_VM_BMS_FIFO_REG_6_LSB

Bits	Name	Description
7:0	BMS_FIFO_REG_6_LSB	FIFO for storing the averaged value by BMS digital (Normal Operation & Early Truncation)

0x000040CD BMS_VM_BMS_FIFO_REG_6_MSB

Type: R
Clock: pbus_wrclk
Reset State: 0xFF
Reset Name: PERPH_RB

BMS_VM_BMS_FIFO_REG_6_MSB

Bits	Name	Description
7:0	BMS_FIFO_REG_6_MSB	FIFO for storing the averaged value by BMS digital (Normal Operation & Early Truncation)

0x000040CE BMS_VM_BMS_FIFO_REG_7_LSB

Type: R
Clock: pbus_wrclk
Reset State: 0xFF
Reset Name: PERPH_RB

BMS_VM_BMS_FIFO_REG_7_LSB

Bits	Name	Description
7:0	BMS_FIFO_REG_7_LSB	FIFO for storing the averaged value by BMS digital (Normal Operation & Early Truncation)

23 BB_CLK1

0x00005100 - 0x00005103 RESERVED

0x00005104 BB_CLK1_PERPH_TYPE

Type: R
Clock: PBUS_WRCLK
Reset State: 0x06
Reset Name: N/A

Peripheral Type

PMIC_CONSTANT

BB_CLK1_PERPH_TYPE

Bits	Name	Description
7:0	TYPE	Clock 0x6: CLOCK

0x00005105 BB_CLK1_PERPH_SUBTYPE

Type: R
Clock: PBUS_WRCLK
Reset State: 0x08
Reset Name: N/A

Peripheral SubType

PMIC_CONSTANT

BB_CLK1_PERPH_SUBTYPE

Bits	Name	Description
7:0	SUBTYPE	BB clock 0x8: BB_CLK

0x00005108 BB_CLK1_STATUS1

Type: R
Clock: PBUS_WRCLK
Reset State: 0x00
Reset Name: N/A

Status Registers

BB_CLK1_STATUS1

Bits	Name	Description
7	CLK_OK	Indicates Hardware or Software enable and includes warmup delay 0x0: BBCLK_OFF 0x1: BBCLK_ON

0x00005143 BB_CLK1_EDGE_CTL1

Type: RW
Clock: PBUS_WRCLK
Reset State: 0x06
Reset Name: PERPH_RB

BB_CLK1_EDGE_CTL1

Bits	Name	Description
3:0	OUT_EDGE	Edge Rate Control: 0000 - Invalid 0001 - Slowest 1111 - Fastest

0x00005144 BB_CLK1_DRV_CTL1

Type: RW
Clock: PBUS_WRCLK
Reset State: 0x02
Reset Name: PERPH_RB

BB_CLK1_DRV_CTL1

Bits	Name	Description
1:0	OUT_DRV	Drive Strength Control 0x0: ONE_X 0x1: TWO_X 0x2: THREE_X 0x3: FOUR_X

0x00005146 BB_CLK1_EN_CTL

Type: RW
Clock: PBUS_WRCLK
Reset State: 0x00
Reset Name: PERPH_RB

BB_CLK1_EN_CTL

Bits	Name	Description
7	CLK_EN	0x0: BBCLK_NOT_FORCE 0x1: BBCLK_FORCE_EN
1	PC_POLARITY	0x0: POS_PINCONTROL_POLARITY 0x1: NEG_PINCONTROL_POLARITY
0	FOLLOW_PC_EN	When set, clock can be enabled from an external signal. 0x0: NOT_FOLLOW_PIN 0x1: FOLLOW_PIN

24 BB_CLK2

0x00005200 - 0x00005203 RESERVED

0x00005204 BB_CLK2_PERPH_TYPE

Type: R
Clock: PBUS_WRCLK
Reset State: 0x06
Reset Name: N/A

Peripheral Type

PMIC_CONSTANT

BB_CLK2_PERPH_TYPE

Bits	Name	Description
7:0	TYPE	Clock 0x6: CLOCK

0x00005205 BB_CLK2_PERPH_SUBTYPE

Type: R
Clock: PBUS_WRCLK
Reset State: 0x08
Reset Name: N/A

Peripheral SubType

PMIC_CONSTANT

BB_CLK2_PERPH_SUBTYPE

Bits	Name	Description
7:0	SUBTYPE	BB clock 0x8: BB_CLK

0x00005208 BB_CLK2_STATUS1

Type: R
Clock: PBUS_WRCLK
Reset State: 0x00
Reset Name: N/A

Status Registers

BB_CLK2_STATUS1

Bits	Name	Description
7	CLK_OK	Indicates Hardware or Software enable and includes warmup delay 0x0: BBCLK_OFF 0x1: BBCLK_ON

0x00005243 BB_CLK2_EDGE_CTL1

Type: RW
Clock: PBUS_WRCLK
Reset State: 0x06
Reset Name: PERPH_RB

BB_CLK2_EDGE_CTL1

Bits	Name	Description
3:0	OUT_EDGE	Edge Rate Control: 0000 - Invalid 0001 - Slowest 1111 - Fastest

0x00005244 BB_CLK2_DRV_CTL1

Type: RW
Clock: PBUS_WRCLK
Reset State: 0x02
Reset Name: PERPH_RB

BB_CLK2_DRV_CTL1

Bits	Name	Description
1:0	OUT_DRV	Drive Strength Control 0x0: ONE_X 0x1: TWO_X 0x2: THREE_X 0x3: FOUR_X

0x00005246 BB_CLK2_EN_CTL

Type: RW
Clock: PBUS_WRCLK
Reset State: 0x00
Reset Name: PERPH_RB

BB_CLK2_EN_CTL

Bits	Name	Description
7	CLK_EN	0x0: BBCLK_NOT_FORCE 0x1: BBCLK_FORCE_EN
1	PC_POLARITY	0x0: POS_PINCONTROL_POLARITY 0x1: NEG_PINCONTROL_POLARITY
0	FOLLOW_PC_EN	When set, clock can be enabled from an external signal. 0x0: NOT_FOLLOW_PIN 0x1: FOLLOW_PIN

25 RF_CLK1

0x00005400 - 0x00005403 RESERVED

0x00005404 RF_CLK1_PERPH_TYPE

Type: R
Clock: PBUS_WRCLK
Reset State: 0x06
Reset Name: N/A

Peripheral Type

PMIC_CONSTANT

RF_CLK1_PERPH_TYPE

Bits	Name	Description
7:0	TYPE	Clock 0x6: CLOCK

0x00005405 RF_CLK1_PERPH_SUBTYPE

Type: R
Clock: PBUS_WRCLK
Reset State: 0x09
Reset Name: N/A

Peripheral SubType

PMIC_CONSTANT

RF_CLK1_PERPH_SUBTYPE

Bits	Name	Description
7:0	SUBTYPE	RF clock 0x9: RF_CLK

0x00005408 RF_CLK1_STATUS1

Type: R
Clock: PBUS_WRCLK
Reset State: 0x00
Reset Name: N/A

Status Registers

RF_CLK1_STATUS1

Bits	Name	Description
7	CLK_OK	0 = Clock is off 1 =Clock is on. Indicates HW or SW enable 0x0: RFCLK_OFF 0x1: RFCLK_ON

0x00005443 RF_CLK1_EDGE_CTL1

Type: RW
Clock: PBUS_WRCLK
Reset State: 0x0F
Reset Name: PERPH_RB

RF_CLK1_EDGE_CTL1

Bits	Name	Description
3:0	OUT_EDGE	Edge Rate Control: 0000 - Invalid 0001 - Slowest 1111 - Fastest

0x00005444 RF_CLK1_DRV_CTL1

Type: RW
Clock: PBUS_WRCLK
Reset State: 0x02
Reset Name: PERPH_RB

RF_CLK1_DRV_CTL1

Bits	Name	Description
1:0	OUT_DRV	Drive Strength Control 0x0: ONE_X 0x1: TWO_X 0x2: THREE_X 0x3: FOUR_X

0x00005446 RF_CLK1_EN_CTL

Type: RW
Clock: PBUS_WRCLK
Reset State: 0x00
Reset Name: PERPH_RB

RF_CLK1_EN_CTL

Bits	Name	Description
7	CLK_EN	0x0: RFCLK_NOT_FORCE 0x1: RFCLK_FORCE_EN
1	PC_POLARITY	0x0: POS_PINCONTROL_POLARITY 0x1: NEG_PINCONTROL_POLARITY
0	FOLLOW_PC_EN	When set, clock can be enabled fRm an external signal. 0x0: NOT_FOLLOW_PIN 0x1: FOLLOW_PIN

26 RF_CLK2

0x00005500 - 0x00005503 RESERVED

0x00005504 RF_CLK2_PERPH_TYPE

Type: R
Clock: PBUS_WRCLK
Reset State: 0x06
Reset Name: N/A

Peripheral Type

PMIC_CONSTANT

RF_CLK2_PERPH_TYPE

Bits	Name	Description
7:0	TYPE	Clock 0x6: CLOCK

0x00005505 RF_CLK2_PERPH_SUBTYPE

Type: R
Clock: PBUS_WRCLK
Reset State: 0x09
Reset Name: N/A

Peripheral SubType

PMIC_CONSTANT

RF_CLK2_PERPH_SUBTYPE

Bits	Name	Description
7:0	SUBTYPE	RF clock 0x9: RF_CLK

0x00005508 RF_CLK2_STATUS1

Type: R
Clock: PBUS_WRCLK
Reset State: 0x00
Reset Name: N/A

Status Registers

RF_CLK2_STATUS1

Bits	Name	Description
7	CLK_OK	0 = Clock is off 1 =Clock is on. Indicates HW or SW enable 0x0: RFCLK_OFF 0x1: RFCLK_ON

0x00005543 RF_CLK2_EDGE_CTL1

Type: RW
Clock: PBUS_WRCLK
Reset State: 0x0F
Reset Name: PERPH_RB

RF_CLK2_EDGE_CTL1

Bits	Name	Description
3:0	OUT_EDGE	Edge Rate Control: 0000 - Invalid 0001 - Slowest 1111 - Fastest

0x00005544 RF_CLK2_DRV_CTL1

Type: RW
Clock: PBUS_WRCLK
Reset State: 0x02
Reset Name: PERPH_RB

RF_CLK2_DRV_CTL1

Bits	Name	Description
1:0	OUT_DRV	Drive Strength Control 0x0: ONE_X 0x1: TWO_X 0x2: THREE_X 0x3: FOUR_X

0x00005546 RF_CLK2_EN_CTL

Type: RW
Clock: PBUS_WRCLK
Reset State: 0x00
Reset Name: PERPH_RB

RF_CLK2_EN_CTL

Bits	Name	Description
7	CLK_EN	0x0: RFCLK_NOT_FORCE 0x1: RFCLK_FORCE_EN
1	PC_POLARITY	0x0: POS_PINCONTROL_POLARITY 0x1: NEG_PINCONTROL_POLARITY
0	FOLLOW_PC_EN	When set, clock can be enabled fRm an external signal. 0x0: NOT_FOLLOW_PIN 0x1: FOLLOW_PIN

27 SLEEP_CLK1

0x00005A00 - RESERVED
0x00005A01

0x00005A04 SLEEP_CLK1_PERPH_TYPE

Type: R
Clock: PBUS_WRCLK
Reset State: 0x06
Reset Name: N/A

Peripheral Type

PMIC_CONSTANT

SLEEP_CLK1_PERPH_TYPE

Bits	Name	Description
7:0	TYPE	Clock 0x6: CLOCK

0x00005A05 SLEEP_CLK1_PERPH_SUBTYPE

Type: R
Clock: PBUS_WRCLK
Reset State: 0x0C
Reset Name: N/A

Peripheral SubType

PMIC_CONSTANT

SLEEP_CLK1_PERPH_SUBTYPE

Bits	Name	Description
7:0	SUBTYPE	Sleep Clock 0xC: SLP_CLK

0x00005A46 SLEEP_CLK1_EN_CTL

Type: RW
Clock: PBUS_WRCLK
Reset State: 0x00
Reset Name: PERPH_RB

SLEEP_CLK1_EN_CTL

Bits	Name	Description
7	SLP_CLK_PAD_EN	Enable Sleep Clock Driver 0x0: SLP_CLK_BUF_DISABLED 0x1: SLP_CLK_BUF_ENABLED

0x00005A48 SLEEP_CLK1_SMPL_CTL1

Type: RW
Clock: PBUS_WRCLK
Reset State: 0x00
Reset Name: soft_xvdd_rb

SLEEP_CLK1_SMPL_CTL1

Bits	Name	Description
7	SMPL_EN	Enable SMPL timer 0x0: SMPL_DISABLE 0x1: SMPL_ENABLED
6	RESERVED	Not used. Used to be TRIGGER_SEL 0x1: PON_RB_TRIGGER 0x0: SHUTDOWN2_RB_TRIGGER
1:0	SMPL_DELAY	0x0: HALF_SEC 0x1: ONE_SEC 0x2: ONEANDHALF_SEC 0x3: TWO_SEC

0x00005A5A SLEEP_CLK1_CAL_RC3

Type: RW
Clock: PBUS_WRCLK
Reset State: 0x01
Reset Name: soft_dvdd_rb

SLEEP_CLK1_CAL_RC3

Bits	Name	Description
0	LFRC_DRIFT_DE-T_EN_BATT	lfrc dirft detector enabled when battery is present 0x0: DRIFT_DET_DISABLED 0x1: DRIFT_DET_ENABLED

0x00005A5B SLEEP_CLK1_CAL_RC4

Type: RW
Clock: PBUS_WRCLK
Reset State: 0x00
Reset Name: soft_xvdd_rb

SLEEP_CLK1_CAL_RC4

Bits	Name	Description
7	CALRC_EN	CalRC enable 0x0: CALRC_DISABLED 0x1: CALRC_ENABLED
6	COINCELL_GOOD	COINCELL_GOOD Indicate whether a qualified coin cell is installed 0x0: WEAK_COINCAP 0x1: STRONG_COINCAP
4	LFRC_DRIFT_DET_EN_-COIN	lfrc dirft detector enabled when coin cell/cap is present 0x0: DRIFT_DET_DISABLED 0x1: DRIFT_DET_ENABLED
0	CALRC_DTEST_EN	CALRC_DTEST_EN When High {DTEST3,DTEST2,DTEST1} = CalRC FSM state[2:0] 0x0: NORMAL 0x1: CALRC_STATE_ON_DTEST

28 DIV_CLK1

0x00005B00 - RESERVED
0x00005B01

0x00005B04 DIV_CLK1_PERPH_TYPE

Type: R
Clock: PBUS_WRCLK
Reset State: 0x06
Reset Name: N/A

Peripheral Type

PMIC_CONSTANT

DIV_CLK1_PERPH_TYPE

Bits	Name	Description
7:0	TYPE	Clock 0x6: CLOCK

0x00005B05 DIV_CLK1_PERPH_SUBTYPE

Type: R
Clock: PBUS_WRCLK
Reset State: 0x0B
Reset Name: N/A

Peripheral SubType

PMIC_CONSTANT

DIV_CLK1_PERPH_SUBTYPE

Bits	Name	Description
7:0	SUBTYPE	DIV_CLK 0xB: DIV_CLK

0x00005B08 DIV_CLK1_STATUS1

Type: R
Clock: PBUS_WRCLK
Reset State: 0x00
Reset Name: N/A

Status Registers

DIV_CLK1_STATUS1

Bits	Name	Description
7	DIVCLK_OK	0 = DIVCLK is off 1 = DIVCLK is on 0x0: DIVIDER_OFF 0x1: DIVIDER_ON

0x00005B43 DIV_CLK1_DIV_CTL1

Type: RW
Clock: PBUS_WRCLK
Reset State: 0x00
Reset Name: PERPH_RB

DIV_CLK1_DIV_CTL1

Bits	Name	Description
2:0	DIV_FACTOR	Low power divided clock output to GPIO divide ratio 000 = XO / 1 001 = XO / 1 010 = XO / 2 011 = XO / 4 100 = XO / 8 101 = XO / 16 110 = XO / 32 111 = XO / 64 0x0: XO_DIV1_0 0x1: XO_DIV1 0x2: XO_DIV2 0x3: XO_DIV4 0x4: XO_DIV8 0x5: XO_DIV16 0x6: XO_DIV32 0x7: XO_DIV64

0x00005B46 DIV_CLK1_EN_CTL

Type: RW
Clock: PBUS_WRCLK
Reset State: 0x00
Reset Name: PERPH_RB

DIV_CLK1_EN_CTL

Bits	Name	Description
7	DIVCLK_EN	1 = DIVCLK is on, 0 = DIVCLK is disabled 0x0: DIVCLK_DIS 0x1: DIVCLK_EN
0	FOLLOW_PC_EN	When set, clock can be enabled from an external signal. 0x0: NOT_FOLLOW_PIN 0x1: FOLLOW_PIN

29 DIV_CLK2

0x00005C00 - RESERVED
0x00005C01

0x00005C04 DIV_CLK2_PERPH_TYPE

Type: R
Clock: PBUS_WRCLK
Reset State: 0x06
Reset Name: N/A

Peripheral Type

PMIC_CONSTANT

DIV_CLK2_PERPH_TYPE

Bits	Name	Description
7:0	TYPE	Clock 0x6: CLOCK

0x00005C05 DIV_CLK2_PERPH_SUBTYPE

Type: R
Clock: PBUS_WRCLK
Reset State: 0x0B
Reset Name: N/A

Peripheral SubType

PMIC_CONSTANT

DIV_CLK2_PERPH_SUBTYPE

Bits	Name	Description
7:0	SUBTYPE	DIV_CLK 0xB: DIV_CLK

0x00005C08 DIV_CLK2_STATUS1

Type: R
Clock: PBUS_WRCLK
Reset State: 0x00
Reset Name: N/A

Status Registers

DIV_CLK2_STATUS1

Bits	Name	Description
7	DIVCLK_OK	0 = DIVCLK is off 1 = DIVCLK is on 0x0: DIVIDER_OFF 0x1: DIVIDER_ON

0x00005C43 DIV_CLK2_DIV_CTL1

Type: RW
Clock: PBUS_WRCLK
Reset State: 0x00
Reset Name: PERPH_RB

DIV_CLK2_DIV_CTL1

Bits	Name	Description
2:0	DIV_FACTOR	Low power divided clock output to GPIO divide ratio 000 = XO / 1 001 = XO / 1 010 = XO / 2 011 = XO / 4 100 = XO / 8 101 = XO / 16 110 = XO / 32 111 = XO / 64 0x0: XO_DIV1_0 0x1: XO_DIV1 0x2: XO_DIV2 0x3: XO_DIV4 0x4: XO_DIV8 0x5: XO_DIV16 0x6: XO_DIV32 0x7: XO_DIV64

0x00005C46 DIV_CLK2_EN_CTL

Type: RW
Clock: PBUS_WRCLK
Reset State: 0x00
Reset Name: PERPH_RB

DIV_CLK2_EN_CTL

Bits	Name	Description
7	DIVCLK_EN	1 = DIVCLK is on, 0 = DIVCLK is disabled 0x0: DIVCLK_DIS 0x1: DIVCLK_EN
0	FOLLOW_PC_EN	When set, clock can be enabled from an external signal. 0x0: NOT_FOLLOW_PIN 0x1: FOLLOW_PIN

30 DIV_CLK3

0x00005D00 - RESERVED
0x00005D01

0x00005D04 DIV_CLK3_PERPH_TYPE

Type: R
Clock: PBUS_WRCLK
Reset State: 0x06
Reset Name: N/A

Peripheral Type

PMIC_CONSTANT

DIV_CLK3_PERPH_TYPE

Bits	Name	Description
7:0	TYPE	Clock 0x6: CLOCK

0x00005D05 DIV_CLK3_PERPH_SUBTYPE

Type: R
Clock: PBUS_WRCLK
Reset State: 0x0B
Reset Name: N/A

Peripheral SubType

PMIC_CONSTANT

DIV_CLK3_PERPH_SUBTYPE

Bits	Name	Description
7:0	SUBTYPE	DIV_CLK 0xB: DIV_CLK

0x00005D08 DIV_CLK3_STATUS1

Type: R
Clock: PBUS_WRCLK
Reset State: 0x00
Reset Name: N/A

Status Registers

DIV_CLK3_STATUS1

Bits	Name	Description
7	DIVCLK_OK	0 = DIVCLK is off 1 = DIVCLK is on 0x0: DIVIDER_OFF 0x1: DIVIDER_ON

0x00005D43 DIV_CLK3_DIV_CTL1

Type: RW
Clock: PBUS_WRCLK
Reset State: 0x00
Reset Name: PERPH_RB

DIV_CLK3_DIV_CTL1

Bits	Name	Description
2:0	DIV_FACTOR	Low power divided clock output to GPIO divide ratio 000 = XO / 1 001 = XO / 1 010 = XO / 2 011 = XO / 4 100 = XO / 8 101 = XO / 16 110 = XO / 32 111 = XO / 64 0x0: XO_DIV1_0 0x1: XO_DIV1 0x2: XO_DIV2 0x3: XO_DIV4 0x4: XO_DIV8 0x5: XO_DIV16 0x6: XO_DIV32 0x7: XO_DIV64

0x00005D46 DIV_CLK3_EN_CTL

Type: RW
Clock: PBUS_WRCLK
Reset State: 0x00
Reset Name: PERPH_RB

DIV_CLK3_EN_CTL

Bits	Name	Description
7	DIVCLK_EN	1 = DIVCLK is on, 0 = DIVCLK is disabled 0x0: DIVCLK_DIS 0x1: DIVCLK_EN
0	FOLLOW_PC_EN	When set, clock can be enabled from an external signal. 0x0: NOT_FOLLOW_PIN 0x1: FOLLOW_PIN

31 RTC_RW

0x00006000 - 0x00006001 RESERVED

0x00006004 RTC_RW_PERPH_TYPE

Type: R
Clock: PBUS_WRCLK
Reset State: 0x07
Reset Name: N/A

Peripheral Type

PMIC_CONSTANT

RTC_RW_PERPH_TYPE

Bits	Name	Description
7:0	TYPE	RTC 0x7: RTC

0x00006005 RTC_RW_PERPH_SUBTYPE

Type: R
Clock: PBUS_WRCLK
Reset State: 0x01
Reset Name: N/A

Peripheral SubType

PMIC_CONSTANT

RTC_RW_PERPH_SUBTYPE

Bits	Name	Description
7:0	SUBTYPE	RTC RW 0x1: RTC_RW

0x00006008 RTC_RW_STATUS1

Type: R
Clock: PBUS_WRCLK
Reset State: 0x00
Reset Name: N/A

Status Registers

RTC_RW_STATUS1

Bits	Name	Description
7	RTC_OK	0 = RTC is disabled 1 = RTC is enabled 0x0: RTC_OFF 0x1: RTC_ON

0x00006046 RTC_RW_EN_CTL1

Type: RW
Clock: PBUS_WRCLK
Reset State: 0x00
Reset Name: soft_xVdd_rb

RTC_RW_EN_CTL1

Bits	Name	Description
7	RTC_EN	RTC_EN - enables the real-time clock 0x1: RTC_COUNTER_EN 0x0: RTC_COUNTER_DIS

0x00006048 RTC_RW_RDATA0

Type: R
Clock: PBUS_WRCLK
Reset State: 0x00
Reset Name: xVdd_rb

RTC_RW_RDATA0

Bits	Name	Description
7:0	RTC_RDATA0	RTC 32-bit counter [7:0] value

0x00006049 RTC_RW_RDATA1

Type: R
Clock: PBUS_WRCLK
Reset State: 0x00
Reset Name: xVdd_rb

RTC_RW_RDATA1

Bits	Name	Description
7:0	RTC_RDATA1	RTC 32-bit counter [15:8] value

0x0000604A RTC_RW_RDATA2

Type: R
Clock: PBUS_WRCLK
Reset State: 0x00
Reset Name: xVdd_rb

RTC_RW_RDATA2

Bits	Name	Description
7:0	RTC_RDATA2	RTC 32-bit counter [23:16] value

0x0000604B RTC_RW_RDATA3

Type: R
Clock: PBUS_WRCLK
Reset State: 0x00
Reset Name: xVdd_rb

RTC_RW_RDATA3

Bits	Name	Description
7:0	RTC_RDATA3	RTC 32-bit counter [31:24] value

32 RTC_ALARM

0x00006100 - 0x00006101 RESERVED

0x00006104 RTC_ALARM_PERPH_TYPE

Type: R
Clock: PBUS_WRCLK
Reset State: 0x07
Reset Name: N/A

Peripheral Type

PMIC_CONSTANT

RTC_ALARM_PERPH_TYPE

Bits	Name	Description
7:0	TYPE	RTC 0x7: RTC

0x00006105 RTC_ALARM_PERPH_SUBTYPE

Type: R
Clock: PBUS_WRCLK
Reset State: 0x03
Reset Name: N/A

Peripheral SubType

PMIC_CONSTANT

RTC_ALARM_PERPH_SUBTYPE

Bits	Name	Description
7:0	SUBTYPE	RTC_ALARM 0x3: RTC_ALARM

0x00006108 RTC_ALARM_STATUS1

Type: R
Clock: PBUS_WRCLK
Reset State: 0x00
Reset Name: N/A

Status Registers

RTC_ALARM_STATUS1

Bits	Name	Description
7	RTC_ALARM_OK	0 = ALARM is not enabled 1 = ALARM is enabled 0x0: RTC_ALARM_DIS0x1: RTC_ALARM_EN

0x00006110 RTC_ALARM_INT_RT_STS

Type: R
Clock: PBUS_WRCLK
Reset State: 0x00
Reset Name: N/A

Interrupt Real Time Status Bits

RTC_ALARM_INT_RT_STS

Bits	Name	Description
1	RTC_ALARM	0x0: RTC_ALARM_NOT_EXPIRED 0x1: RTC_ALARM_EXPIRED

0x00006111 RTC_ALARM_INT_SET_TYPE

Type: RW
Clock: PBUS_WRCLK
Reset State: 0x00
Reset Name: PERPH_RB

RTC_ALARM_INT_SET_TYPE

Bits	Name	Description
1	RTC_ALARM	0x0: LEVEL 0x1: EDGE

0x00006112 RTC_ALARM_INT_POLARITY_HIGH

Type: RW
Clock: PBUS_WRCLK
Reset State: 0x00
Reset Name: PERPH_RB

RTC_ALARM_INT_POLARITY_HIGH

Bits	Name	Description
1	RTC_ALARM	0x0: HIGH_TRIGGER_DISABLED 0x1: HIGH_TRIGGER_ENABLED

0x00006113 RTC_ALARM_INT_POLARITY_LOW

Type: RW
Clock: PBUS_WRCLK
Reset State: 0x00
Reset Name: PERPH_RB

RTC_ALARM_INT_POLARITY_LOW

Bits	Name	Description
1	RTC_ALARM	0x0: LOW_TRIGGER_DISABLED 0x1: LOW_TRIGGER_ENABLED

0x00006114 RTC_ALARM_INT_LATCHED_CLR

Type: W
Clock: PBUS_WRCLK
Reset State: 0x00
Reset Name: PERPH_RB

writing a '1' to this interrupt will rearm the interrupt when an interrupt is pending. It clears the internal sticky and sent bits

RTC_ALARM_INT_LATCHED_CLR

Bits	Name	Description
1	RTC_ALARM	

0x00006115 RTC_ALARM_INT_EN_SET

Type: RW
Clock: PBUS_WRCLK
Reset State: 0x00
Reset Name: PERPH_RB

PMIC_SET_MASK

RTC_ALARM_INT_EN_SET

Bits	Name	Description
1	RTC_ALARM	0x0: INT_DISABLED 0x1: INT_ENABLED

0x00006116 RTC_ALARM_INT_EN_CLR

Type: RW
Clock: PBUS_WRCLK
Reset State: 0x00
Reset Name: PERPH_RB

PMIC_CLR_MASK=INT_EN_SET

RTC_ALARM_INT_EN_CLR

Bits	Name	Description
1	RTC_ALARM	

0x00006118 RTC_ALARM_INT_LATCHED_STS

Type: R
Clock: PBUS_WRCLK
Reset State: 0x00
Reset Name: N/A

Debug: Latched (Sticky) Interrupt. '1' indicates that the interrupt has triggered. Once the latched bit is set it can only be cleared by writing the clear bit.

RTC_ALARM_INT_LATCHED_STS

Bits	Name	Description
1	RTC_ALARM	0x0: NO_INT_LATCHED 0x1: INTERRUPT_LATCHED

0x00006119 RTC_ALARM_INT_PENDING_STS

Type: R
Clock: PBUS_WRCLK
Reset State: 0x00
Reset Name: N/A

Debug: Pending is set if interrupt has been sent but not cleared.

RTC_ALARM_INT_PENDING_STS

Bits	Name	Description
1	RTC_ALARM	0x0: NO_INT_PENDING 0x1: INTERRUPT_PENDING

0x0000611A RTC_ALARM_INT_MID_SEL

Type: RW
Clock: PBUS_WRCLK
Reset State: 0x00
Reset Name: PERPH_RB

Selects the MID that will receive the interrupt

RTC_ALARM_INT_MID_SEL

Bits	Name	Description
1:0	INT_MID_SEL	0x0: MID0 0x1: MID1 0x2: MID2 0x3: MID3

0x0000611B RTC_ALARM_INT_PRIORITY

Type: RW
Clock: PBUS_WRCLK
Reset State: 0x00
Reset Name: PERPH_RB

SR=0 A=1

RTC_ALARM_INT_PRIORITY

Bits	Name	Description
0	INT_PRIORITY	0x0: SR 0x1: A

0x00006140 RTC_ALARM_ALARM_DATA0

Type: RW
Clock: PBUS_WRCLK
Reset State: 0x00
Reset Name: soft_xVdd_rb

RTC_ALARM_ALARM_DATA0

Bits	Name	Description
7:0	RTC_ALARM_DATA0	RTC_ALARM_DATA0 - Real time alarm value [7:0].

0x00006141 RTC_ALARM_ALARM_DATA1

Type: RW
Clock: PBUS_WRCLK
Reset State: 0x00
Reset Name: soft_xVdd_rb

RTC_ALARM_ALARM_DATA1

Bits	Name	Description
7:0	RTC_ALARM_DATA1	RTC_ALARM_DATA1 - Real time alarm value [15:8].

0x00006142 RTC_ALARM_ALARM_DATA2

Type: RW
Clock: PBUS_WRCLK
Reset State: 0x00
Reset Name: soft_xVdd_rb

RTC_ALARM_ALARM_DATA2

Bits	Name	Description
7:0	RTC_ALARM_DATA2	RTC_ALARM_DATA2 - Real time alarm value [23:16].

0x00006143 RTC_ALARM_ALARM_DATA3

Type: RW
Clock: PBUS_WRCLK
Reset State: 0x00
Reset Name: soft_xVdd_rb

RTC_ALARM_ALARM_DATA3

Bits	Name	Description
7:0	RTC_ALARM_DATA3	RTC_ALARM_DATA3 - Real time alarm value [31:24].

0x00006146 RTC_ALARM_EN_CTL1

Type: RW
Clock: PBUS_WRCLK
Reset State: 0x00
Reset Name: soft_xVdd_rb

RTC_ALARM_EN_CTL1

Bits	Name	Description
7	ALARM_EN	ALARM_EN - enables the real-time clock alarm 0x0: RTC_ALARM_DIS 0x1: RTC_ALARM_EN
0	ABORT_EN	ABORT_EN - Enable the abort on PERPH_RB feature. If the PMIC fails to power up within 4 seconds, the alarm will be masked to stop repeated power cycling. 0x0: RTC_STARTUP_DOESNT_ABORT 0x1: RTC_STARTUP_ABORT_EN

0x00006148 RTC_ALARM_ALARM_CLR

Type: W
Clock: PBUS_WRCLK
Reset State: 0x00
Reset Name: soft_xVdd_rb

RTC_ALARM_ALARM_CLR

Bits	Name	Description
0	ALARM_CLR	RTC alarm cleared by writing 1

33 MPP1

0x0000A000 - RESERVED
0x0000A003

0x0000A004 MPP1_PERPH_TYPE

Type: R
Clock: PBUS_WRCLK
Reset State: 0x11
Reset Name: N/A

Peripheral Type

PMIC_CONSTANT

MPP1_PERPH_TYPE

Bits	Name	Description
7:0	TYPE	0x11: MPP

0x0000A005 MPP1_PERPH_SUBTYPE

Type: R
Clock: PBUS_WRCLK
Reset State: 0x06
Reset Name: N/A

Peripheral SubType

MPP1_PERPH_SUBTYPE

Bits	Name	Description
7:0	SUBTYPE	0x3: MPP_4CH_SINK 0x4: ULT_MPP_4CH_SINK 0x5: MPP_4CH_AOUT 0x6: ULT_MPP_4CH_AOUT 0x7: MPP_4CH_AOUT_SINK 0xB: MPP_8CH_SINK 0xD: MPP_8CH_AOUT 0xF: MPP_8CH_AOUT_SINK

0x0000A008 MPP1_STATUS1

Type: R
Clock: PBUS_WRCLK
Reset State: 0x00000000
Reset Name: N/A

Status Registers

MPP1_STATUS1

Bits	Name	Description
7	MPP_OK	DEF: X 0 = MPP is disabled 1 = MPP is enabled 0x0: MPP_DISABLED 0x1: MPP_ENABLED
0	MPP_VAL	DEF: X Value read by the input buffer, if enabled 0x0: MPP_INPUT_LOW 0x1: MPP_INPUT_HIGH

0x0000A010 MPP1_INT_RT_STS

Type: R
Clock: PBUS_WRCLK
Reset State: 0x00
Reset Name: N/A

Interrupt Real Time Status Bits

MPP1_INT_RT_STS

Bits	Name	Description
0	MPP_IN_STS	0x0: INT_RT_STATUS_LOW 0x1: INT_RT_STATUS_HIGH

0x0000A011 MPP1_INT_SET_TYPE

Type: RW
Clock: PBUS_WRCLK
Reset State: 0x00
Reset Name: PERPH_RB

0 = use level trigger interrupts, 1 = use edge trigger interrupts

MPP1_INT_SET_TYPE

Bits	Name	Description
0	MPP_IN_TYPE	0x0: LEVEL 0x1: EDGE

0x0000A012 MPP1_INT_POLARITY_HIGH

Type: RW
Clock: PBUS_WRCLK
Reset State: 0x00
Reset Name: PERPH_RB

1= Interrupt will trigger on a level high (rising edge) event, 0 = level high triggering is disabled

MPP1_INT_POLARITY_HIGH

Bits	Name	Description
0	MPP_IN_HIGH	0x0: HIGH_TRIGGER_DISABLED 0x1: HIGH_TRIGGER_ENABLED

0x0000A013 MPP1_INT_POLARITY_LOW

Type: RW
Clock: PBUS_WRCLK
Reset State: 0x00
Reset Name: PERPH_RB

1' = Interrupt will trigger on a level low (falling edge) event, '0' = level low triggering is disabled

MPP1_INT_POLARITY_LOW

Bits	Name	Description
0	MPP_IN_LOW	0x0: LOW_TRIGGER_DISABLED 0x1: LOW_TRIGGER_ENABLED

0x0000A014 MPP1_INT_LATCHED_CLR

Type: W
Clock: PBUS_WRCLK
Reset State: 0x00
Reset Name: PERPH_RB

writing a '1' to this interrupt will rearm the interrupt when an interrupt is pending. It clears the internal sticky and sent bits

MPP1_INT_LATCHED_CLR

Bits	Name	Description
0	MPP_IN_LATCHED_CLR	

0x0000A015 MPP1_INT_EN_SET

Type: RW
Clock: PBUS_WRCLK
Reset State: 0x00
Reset Name: PERPH_RB

writing '0' to this register has no effect. Writing a '1' will enable the corresponding interrupt. Reading this register will readback enable status

PMIC_SET_MASK

MPP1_INT_EN_SET

Bits	Name	Description
0	MPP_IN_EN_SET	0x0: INT_DISABLED 0x1: INT_ENABLED

0x0000A016 MPP1_INT_EN_CLR

Type: RW
Clock: PBUS_WRCLK
Reset State: 0x00
Reset Name: PERPH_RB

writing '0' to this register has no effect. Writing a '1' will disable the corresponding interrupt. Reading this register will readback enable status

PMIC_CLR_MASK=INT_EN_SET

MPP1_INT_EN_CLR

Bits	Name	Description
0	MPP_IN_EN_CLR	0x0: INT_DISABLED 0x1: INT_ENABLED

0x0000A018 MPP1_INT_LATCHED_STS

Type: R
Clock: PBUS_WRCLK
Reset State: 0x00
Reset Name: N/A

Latched (Sticky) Interrupt. '1' indicates that the interrupt has triggered. Once the latched bit is set it can only be cleared by writing the clear bit.

MPP1_INT_LATCHED_STS

Bits	Name	Description
0	MPP_IN_LATCHED_STS	0x0: NO_INT_LATCHED 0x1: INTERRUPT_LATCHED

0x0000A019 MPP1_INT_PENDING_STS

Type: R
Clock: PBUS_WRCLK
Reset State: 0x00
Reset Name: N/A

Debug: Pending is set if interrupt has been sent but not cleared.

MPP1_INT_PENDING_STS

Bits	Name	Description
0	MPP_IN_PENDING_STS	0x0: NO_INT_PENDING 0x1: INTERRUPT_PENDING

0x0000A01A MPP1_INT_MID_SEL

Type: RW
Clock: PBUS_WRCLK
Reset State: 0x00
Reset Name: PERPH_RB

Selects the MID that will receive the interrupt

MPP1_INT_MID_SEL

Bits	Name	Description
1:0	INT_MID_SEL	0x0: MID0 0x1: MID1 0x2: MID2 0x3: MID3

0x0000A01B MPP1_INT_PRIORITY

Type: RW
Clock: PBUS_WRCLK
Reset State: 0x00
Reset Name: PERPH_RB

MPP1_INT_PRIORITY

Bits	Name	Description
0	INT_PRIORITY	0x0: SR 0x1: A

0x0000A040 MPP1_MODE_CTL

Type: RW
Clock: PBUS_WRCLK
Reset State: 0x00
Reset Name: PERPH_RB

MPP Mode allows you to switch from one mode to another mode in a single register write.

MPP1_MODE_CTL

Bits	Name	Description
6:4	MODE	MPP Type: 0x0: DIGITAL_INPUT 0x1: DIGITAL_OUTPUT 0x2: DIGITAL_IN_AND_OUT 0x3: RESERVED3 0x4: ANALOG_INPUT 0x5: ANALOG_OUTPUT 0x6: CURRENT_SINK 0x7: RESERVED7

MPP1_MODE_CTL (cont.)

Bits	Name	Description
3:0	EN_AND_SOURCE_SEL	When configured as a digital output Source select: 0000 = 0 0001 = 1 0010 = paired MPP 0011 = inverted paired MPP 0100 = Reserved 0101 = Reserved 0110 = Reserved 0111 = Reserved 1000 = DTEST1 1001 = inverted DTEST1 1010 = DTEST2 1011 = inverted DTEST2 1100 = DTEST3 1101 = inverted DTEST3 1110 = DTEST4 1111 = inverted DTEST4 Enable control when configured as AOUT, or Current Sink. MPP is enable whenever the selected condition is true. 0000 = 0 (mpp is always disabled) 0001 = 1 (mpp is always Enabled) 0010 = paired MPP 0011 = inverted paired MPP 0100 = Reserved 0101 = Reserved 0110 = Reserved 0111 = Reserved 1000 = DTEST1 1001 = inverted DTEST1 1010 = DTEST2 1011 = inverted DTEST2 1100 = DTEST3 1101 = inverted DTEST3 1110 = DTEST4 1111 = inverted DTEST4 0x0: LOW 0x1: HIGH 0x2: PAIRED_MPP 0x3: NOT_PAIRED_MPP 0x4: RESERVED4

MPP1_MODE_CTL (cont.)

Bits	Name	Description
		0x5: RESERVED5 0x6: RESERVED6 0x7: RESERVED7 0x8: DTEST1 0x9: NOT_DTEST1 0xA: DTEST2 0xB: NOT_DTEST2 0xC: DTEST3 0xD: NOT_DTEST3 0xE: DTEST4 0xF: NOT_DTEST4

0x0000A041 MPP1_DIG_VIN_CTL

Type: RW
Clock: PBUS_WRCLK
Reset State: 0x00
Reset Name: PERPH_RB

MPP1_DIG_VIN_CTL

Bits	Name	Description
2:0	VOLTAGE_SEL	Select Voltage source: 0x0: VIN0 0x1: VIN1 0x2: VIN2 0x3: VIN3

0x0000A043 MPP1_DIG_IN_CTL

Type: RW
Clock: PBUS_WRCLK
Reset State: 0x00
Reset Name: PERPH_RB

Enable DTEST buffers

MPP1_DIG_IN_CTL

Bits	Name	Description
3	DTEST4	Route to DTEST4 0x0: DTEST_DISABLED 0x1: DTEST_ENABLED

MPP1_DIG_IN_CTL (cont.)

Bits	Name	Description
2	DTEST3	Route to DTEST3 0x0: DTEST_DISABLED 0x1: DTEST_ENABLED
1	DTEST2	Route to DTEST2 0x0: DTEST_DISABLED 0x1: DTEST_ENABLED
0	DTEST1	Route to DTEST1 0x0: DTEST_DISABLED 0x1: DTEST_ENABLED

0x0000A046 MPP1_EN_CTL

Type: RW
Clock: PBUS_WRCLK
Reset State: 0x00
Reset Name: PERPH_RB

MPP1_EN_CTL

Bits	Name	Description
7	PERPH_EN	MPP Master enable 0 = puts MPP_PAD at high Z and disables the block 1 = MPP is enabled 0x0: MPP_DISABLED 0x1: MPP_ENABLED

0x0000A048 MPP1_ANA_OUT_CTL

Type: RW
Clock: PBUS_WRCLK
Reset State: 0x00
Reset Name: PERPH_RB

MPP1_ANA_OUT_CTL

Bits	Name	Description
2:0	REF_SEL	Analog Output Control 0: Output = vref_1V25 = REF_BYP pin, typically 1.25 Volts 1: Output = vref_V625 = 0.625 Volts (internal use only) 2: Output = vref_V3125 = 0.3125 Volts (internal use only) 3: Output = paired MPP input (internal use only) 4: Output = buffered ATEST1 (aka ABUS1) (internal use only) 5: Output = buffered ATEST2 (aka ABUS2) (internal use only) 6: Output = buffered ATEST3 (aka ABUS3) (internal use only) 7: Output = buffered ATEST4 (aka ABUS4) (internal use only) 0x0: VREF_1V25 0x1: VREF_0V625 0x2: VREF_0V3125 0x3: PAIRED_MPP 0x4: ATEST1 0x5: ATEST2 0x6: ATEST3 0x7: ATEST4

0x0000A04C MPP1_SINK_CTL

Type: RW
Clock: PBUS_WRCLK
Reset State: 0x00
Reset Name: PERPH_RB

MPP1_SINK_CTL

Bits	Name	Description
2:0	CURRENT_SEL	Current Sink Output Control 0x0: CURRENT_5MA 0x1: CURRENT_10MA 0x2: CURRENT_15MA 0x3: CURRENT_20MA 0x4: CURRENT_25MA 0x5: CURRENT_30MA 0x6: CURRENT_35MA 0x7: CURRENT_40MA

34 MPP2

0x0000A100 - RESERVED
0x0000A003

0x0000A104 MPP2_PERPH_TYPE

Type: R
Clock: PBUS_WRCLK
Reset State: 0x11
Reset Name: N/A

Peripheral Type

PMIC_CONSTANT

MPP2_PERPH_TYPE

Bits	Name	Description
7:0	TYPE	0x11: MPP

0x0000A105 MPP2_PERPH_SUBTYPE

Type: R
Clock: PBUS_WRCLK
Reset State: 0x04
Reset Name: N/A

Peripheral SubType

MPP2_PERPH_SUBTYPE

Bits	Name	Description
7:0	SUBTYPE	0x3: MPP_4CH_SINK 0x4: ULT_MPP_4CH_SINK 0x5: MPP_4CH_AOUT 0x6: ULT_MPP_4CH_AOUT 0x7: MPP_4CH_AOUT_SINK 0xB: MPP_8CH_SINK 0xD: MPP_8CH_AOUT 0xF: MPP_8CH_AOUT_SINK

0x0000A108 MPP2_STATUS1

Type: R
Clock: PBUS_WRCLK
Reset State: 0x00000000
Reset Name: N/A

Status Registers

MPP2_STATUS1

Bits	Name	Description
7	MPP_OK	DEF: X 0 = MPP is disabled 1 = MPP is enabled 0x0: MPP_DISABLED 0x1: MPP_ENABLED
0	MPP_VAL	DEF: X Value read by the input buffer, if enabled 0x0: MPP_INPUT_LOW 0x1: MPP_INPUT_HIGH

0x0000A110 MPP2_INT_RT_STS

Type: R
Clock: PBUS_WRCLK
Reset State: 0x00
Reset Name: N/A

Interrupt Real Time Status Bits

MPP2_INT_RT_STS

Bits	Name	Description
0	MPP_IN_STS	0x0: INT_RT_STATUS_LOW 0x1: INT_RT_STATUS_HIGH

0x0000A111 MPP2_INT_SET_TYPE

Type: RW
Clock: PBUS_WRCLK
Reset State: 0x00
Reset Name: PERPH_RB

0 = use level trigger interrupts, 1 = use edge trigger interrupts

MPP2_INT_SET_TYPE

Bits	Name	Description
0	MPP_IN_TYPE	0x0: LEVEL 0x1: EDGE

0x0000A112 MPP2_INT_POLARITY_HIGH

Type: RW
Clock: PBUS_WRCLK
Reset State: 0x00
Reset Name: PERPH_RB

1= Interrupt will trigger on a level high (rising edge) event, 0 = level high triggering is disabled

MPP2_INT_POLARITY_HIGH

Bits	Name	Description
0	MPP_IN_HIGH	0x0: HIGH_TRIGGER_DISABLED 0x1: HIGH_TRIGGER_ENABLED

0x0000A113 MPP2_INT_POLARITY_LOW

Type: RW
Clock: PBUS_WRCLK
Reset State: 0x00
Reset Name: PERPH_RB

1' = Interrupt will trigger on a level low (falling edge) event, '0' = level low triggering is disabled

MPP2_INT_POLARITY_LOW

Bits	Name	Description
0	MPP_IN_LOW	0x0: LOW_TRIGGER_DISABLED 0x1: LOW_TRIGGER_ENABLED

0x0000A114 MPP2_INT_LATCHED_CLR

Type: W
Clock: PBUS_WRCLK
Reset State: 0x00
Reset Name: PERPH_RB

writing a '1' to this interrupt will rearm the interrupt when an interrupt is pending. It clears the internal sticky and sent bits

MPP2_INT_LATCHED_CLR

Bits	Name	Description
0	MPP_IN_LATCHED_CLR	

0x0000A115 MPP2_INT_EN_SET

Type: RW
Clock: PBUS_WRCLK
Reset State: 0x00
Reset Name: PERPH_RB

writing '0' to this register has no effect. Writing a '1' will enable the corresponding interrupt. Reading this register will readback enable status

PMIC_SET_MASK

MPP2_INT_EN_SET

Bits	Name	Description
0	MPP_IN_EN_SET	0x0: INT_DISABLED 0x1: INT_ENABLED

0x0000A116 MPP2_INT_EN_CLR

Type: RW
Clock: PBUS_WRCLK
Reset State: 0x00
Reset Name: PERPH_RB

writing '0' to this register has no effect. Writing a '1' will disable the corresponding interrupt. Reading this register will readback enable status

PMIC_CLR_MASK=INT_EN_SET

MPP2_INT_EN_CLR

Bits	Name	Description
0	MPP_IN_EN_CLR	0x0: INT_DISABLED 0x1: INT_ENABLED

0x0000A118 MPP2_INT_LATCHED_STS

Type: R
Clock: PBUS_WRCLK
Reset State: 0x00
Reset Name: N/A

Latched (Sticky) Interrupt. '1' indicates that the interrupt has triggered. Once the latched bit is set it can only be cleared by writing the clear bit.

MPP2_INT_LATCHED_STS

Bits	Name	Description
0	MPP_IN_LATCHED_STS	0x0: NO_INT_LATCHED 0x1: INTERRUPT_LATCHED

0x0000A119 MPP2_INT_PENDING_STS

Type: R
Clock: PBUS_WRCLK
Reset State: 0x00
Reset Name: N/A

Debug: Pending is set if interrupt has been sent but not cleared.

MPP2_INT_PENDING_STS

Bits	Name	Description
0	MPP_IN_PENDING_STS	0x0: NO_INT_PENDING 0x1: INTERRUPT_PENDING

0x0000A11A MPP2_INT_MID_SEL

Type: RW
Clock: PBUS_WRCLK
Reset State: 0x00
Reset Name: PERPH_RB

Selects the MID that will receive the interrupt

MPP2_INT_MID_SEL

Bits	Name	Description
1:0	INT_MID_SEL	0x0: MID0 0x1: MID1 0x2: MID2 0x3: MID3

0x0000A11B MPP2_INT_PRIORITY

Type: RW
Clock: PBUS_WRCLK
Reset State: 0x00
Reset Name: PERPH_RB

MPP2_INT_PRIORITY

Bits	Name	Description
0	INT_PRIORITY	0x0: SR 0x1: A

0x0000A140 MPP2_MODE_CTL

Type: RW
Clock: PBUS_WRCLK
Reset State: 0x00
Reset Name: PERPH_RB

MPP Mode allows you to switch from one mode to another mode in a single register write.

MPP2_MODE_CTL

Bits	Name	Description
6:4	MODE	MPP Type: 0x0: DIGITAL_INPUT 0x1: DIGITAL_OUTPUT 0x2: DIGITAL_IN_AND_OUT 0x3: RESERVED3 0x4: ANALOG_INPUT 0x5: ANALOG_OUTPUT 0x6: CURRENT_SINK 0x7: RESERVED7

MPP2_MODE_CTL (cont.)

Bits	Name	Description
3:0	EN_AND_SOURCE_SEL	When configured as a digital output Source select: 0000 = 0 0001 = 1 0010 = paired MPP 0011 = inverted paired MPP 0100 = Reserved 0101 = Reserved 0110 = Reserved 0111 = Reserved 1000 = DTEST1 1001 = inverted DTEST1 1010 = DTEST2 1011 = inverted DTEST2 1100 = DTEST3 1101 = inverted DTEST3 1110 = DTEST4 1111 = inverted DTEST4 Enable control when configured as AOUT, or Current Sink. MPP is enable whenever the selected condition is true. 0000 = 0 (mpp is always disabled) 0001 = 1 (mpp is always Enabled) 0010 = paired MPP 0011 = inverted paired MPP 0100 = Reserved 0101 = Reserved 0110 = Reserved 0111 = Reserved 1000 = DTEST1 1001 = inverted DTEST1 1010 = DTEST2 1011 = inverted DTEST2 1100 = DTEST3 1101 = inverted DTEST3 1110 = DTEST4 1111 = inverted DTEST4 0x0: LOW 0x1: HIGH 0x2: PAIRED_MPP 0x3: NOT_PAIRED_MPP 0x4: RESERVED4

MPP2_MODE_CTL (cont.)

Bits	Name	Description
		0x5: RESERVED5 0x6: RESERVED6 0x7: RESERVED7 0x8: DTEST1 0x9: NOT_DTEST1 0xA: DTEST2 0xB: NOT_DTEST2 0xC: DTEST3 0xD: NOT_DTEST3 0xE: DTEST4 0xF: NOT_DTEST4

0x0000A141 MPP2_DIG_VIN_CTL

Type: RW
Clock: PBUS_WRCLK
Reset State: 0x00
Reset Name: PERPH_RB

MPP2_DIG_VIN_CTL

Bits	Name	Description
2:0	VOLTAGE_SEL	Select Voltage source: 0x0: VIN0 0x1: VIN1 0x2: VIN2 0x3: VIN3

0x0000A143 MPP2_DIG_IN_CTL

Type: RW
Clock: PBUS_WRCLK
Reset State: 0x00
Reset Name: PERPH_RB

Enable DTEST buffers

MPP2_DIG_IN_CTL

Bits	Name	Description
3	DTEST4	Route to DTEST4 0x0: DTEST_DISABLED 0x1: DTEST_ENABLED

MPP2_DIG_IN_CTL (cont.)

Bits	Name	Description
2	DTEST3	Route to DTEST3 0x0: DTEST_DISABLED 0x1: DTEST_ENABLED
1	DTEST2	Route to DTEST2 0x0: DTEST_DISABLED 0x1: DTEST_ENABLED
0	DTEST1	Route to DTEST1 0x0: DTEST_DISABLED 0x1: DTEST_ENABLED

0x0000A146 MPP2_EN_CTL

Type: RW
Clock: PBUS_WRCLK
Reset State: 0x00
Reset Name: PERPH_RB

MPP2_EN_CTL

Bits	Name	Description
7	PERPH_EN	MPP Master enable 0 = puts MPP_PAD at high Z and disables the block 1 = MPP is enabled 0x0: MPP_DISABLED 0x1: MPP_ENABLED

0x0000A148 MPP2_ANA_OUT_CTL

Type: RW
Clock: PBUS_WRCLK
Reset State: 0x00
Reset Name: PERPH_RB

MPP2_ANA_OUT_CTL

Bits	Name	Description
2:0	REF_SEL	Analog Output Control 0: Output = vref_1V25 = REF_BYP pin, typically 1.25 Volts 1: Output = vref_V625 = 0.625 Volts (internal use only) 2: Output = vref_V3125 = 0.3125 Volts (internal use only) 3: Output = paired MPP input (internal use only) 4: Output = buffered ATEST1 (aka ABUS1) (internal use only) 5: Output = buffered ATEST2 (aka ABUS2) (internal use only) 6: Output = buffered ATEST3 (aka ABUS3) (internal use only) 7: Output = buffered ATEST4 (aka ABUS4) (internal use only) 0x0: VREF_1V25 0x1: VREF_0V625 0x2: VREF_0V3125 0x3: PAIRED_MPP 0x4: ATEST1 0x5: ATEST2 0x6: ATEST3 0x7: ATEST4

0x0000A14A MPP2_ANA_IN_CTL

Type: RW
Clock: PBUS_WRCLK
Reset State: 0x00
Reset Name: PERPH_RB

MPP2_ANA_IN_CTL

Bits	Name	Description
2:0	ROUTE_SEL	AMUX Channel Control 0: Route to hkadc5 1: Route to hkadc6 2: Route to hkadc7 3: Route to hkadc8 4: Route to ATEST1 (aka ABUS1) (internal use only) 5: Route to ATEST2 (aka ABUS2) (internal use only) 6: Route to ATEST3 (aka ABUS3) (internal use only) 7: Route to ATEST4 (aka ABUS4) (internal use only) 0x0: HKADC5 0x1: HKADC6 0x2: HKADC7 0x3: HKADC8 0x4: ATEST1 0x5: ATEST2 0x6: ATEST3 0x7: ATEST4

0x0000A14C MPP2_SINK_CTL

Type: RW
Clock: PBUS_WRCLK
Reset State: 0x00
Reset Name: PERPH_RB

MPP2_SINK_CTL

Bits	Name	Description
2:0	CURRENT_SEL	Current Sink Output Control 0x0: CURRENT_5MA 0x1: CURRENT_10MA 0x2: CURRENT_15MA 0x3: CURRENT_20MA 0x4: CURRENT_25MA 0x5: CURRENT_30MA 0x6: CURRENT_35MA 0x7: CURRENT_40MA

35 MPP3

0x0000A200 - RESERVED
0x0000A203

0x0000A204 MPP3_PERPH_TYPE

Type: R
Clock: PBUS_WRCLK
Reset State: 0x11
Reset Name: N/A

Peripheral Type

PMIC_CONSTANT

MPP3_PERPH_TYPE

Bits	Name	Description
7:0	TYPE	0x11: MPP

0x0000A205 MPP3_PERPH_SUBTYPE

Type: R
Clock: PBUS_WRCLK
Reset State: 0x06
Reset Name: N/A

Peripheral SubType

MPP3_PERPH_SUBTYPE

Bits	Name	Description
7:0	SUBTYPE	0x3: MPP_4CH_SINK 0x4: ULT_MPP_4CH_SINK 0x5: MPP_4CH_AOUT 0x6: ULT_MPP_4CH_AOUT 0x7: MPP_4CH_AOUT_SINK 0xB: MPP_8CH_SINK 0xD: MPP_8CH_AOUT 0xF: MPP_8CH_AOUT_SINK

0x0000A208 MPP3_STATUS1

Type: R
Clock: PBUS_WRCLK
Reset State: 0x00000000
Reset Name: N/A

Status Registers

MPP3_STATUS1

Bits	Name	Description
7	MPP_OK	DEF: X 0 = MPP is disabled 1 = MPP is enabled 0x0: MPP_DISABLED 0x1: MPP_ENABLED
0	MPP_VAL	DEF: X Value read by the input buffer, if enabled 0x0: MPP_INPUT_LOW 0x1: MPP_INPUT_HIGH

0x0000A210 MPP3_INT_RT_STS

Type: R
Clock: PBUS_WRCLK
Reset State: 0x00
Reset Name: N/A

Interrupt Real Time Status Bits

MPP3_INT_RT_STS

Bits	Name	Description
0	MPP_IN_STS	0x0: INT_RT_STATUS_LOW 0x1: INT_RT_STATUS_HIGH

0x0000A211 MPP3_INT_SET_TYPE

Type: RW
Clock: PBUS_WRCLK
Reset State: 0x00
Reset Name: PERPH_RB

0 = use level trigger interrupts, 1 = use edge trigger interrupts

MPP3_INT_SET_TYPE

Bits	Name	Description
0	MPP_IN_TYPE	0x0: LEVEL 0x1: EDGE

0x0000A212 MPP3_INT_POLARITY_HIGH

Type: RW
Clock: PBUS_WRCLK
Reset State: 0x00
Reset Name: PERPH_RB

1= Interrupt will trigger on a level high (rising edge) event, 0 = level high triggering is disabled

MPP3_INT_POLARITY_HIGH

Bits	Name	Description
0	MPP_IN_HIGH	0x0: HIGH_TRIGGER_DISABLED 0x1: HIGH_TRIGGER_ENABLED

0x0000A213 MPP3_INT_POLARITY_LOW

Type: RW
Clock: PBUS_WRCLK
Reset State: 0x00
Reset Name: PERPH_RB

1' = Interrupt will trigger on a level low (falling edge) event, '0' = level low triggering is disabled

MPP3_INT_POLARITY_LOW

Bits	Name	Description
0	MPP_IN_LOW	0x0: LOW_TRIGGER_DISABLED 0x1: LOW_TRIGGER_ENABLED

0x0000A214 MPP3_INT_LATCHED_CLR

Type: W
Clock: PBUS_WRCLK
Reset State: 0x00
Reset Name: PERPH_RB

writing a '1' to this interrupt will rearm the interrupt when an interrupt is pending. It clears the internal sticky and sent bits

MPP3_INT_LATCHED_CLR

Bits	Name	Description
0	MPP_IN_LATCHED_CLR	

0x0000A215 MPP3_INT_EN_SET

Type: RW
Clock: PBUS_WRCLK
Reset State: 0x00
Reset Name: PERPH_RB

writing '0' to this register has no effect. Writing a '1' will enable the corresponding interrupt. Reading this register will readback enable status

PMIC_SET_MASK

MPP3_INT_EN_SET

Bits	Name	Description
0	MPP_IN_EN_SET	0x0: INT_DISABLED 0x1: INT_ENABLED

0x0000A216 MPP3_INT_EN_CLR

Type: RW
Clock: PBUS_WRCLK
Reset State: 0x00
Reset Name: PERPH_RB

writing '0' to this register has no effect. Writing a '1' will disable the corresponding interrupt. Reading this register will readback enable status

PMIC_CLR_MASK=INT_EN_SET

MPP3_INT_EN_CLR

Bits	Name	Description
0	MPP_IN_EN_CLR	0x0: INT_DISABLED 0x1: INT_ENABLED

0x0000A218 MPP3_INT_LATCHED_STS

Type: R
Clock: PBUS_WRCLK
Reset State: 0x00
Reset Name: N/A

Latched (Sticky) Interrupt. '1' indicates that the interrupt has triggered. Once the latched bit is set it can only be cleared by writing the clear bit.

MPP3_INT_LATCHED_STS

Bits	Name	Description
0	MPP_IN_LATCHED_STS	0x0: NO_INT_LATCHED 0x1: INTERRUPT_LATCHED

0x0000A219 MPP3_INT_PENDING_STS

Type: R
Clock: PBUS_WRCLK
Reset State: 0x00
Reset Name: N/A

Debug: Pending is set if interrupt has been sent but not cleared.

MPP3_INT_PENDING_STS

Bits	Name	Description
0	MPP_IN_PENDING_STS	0x0: NO_INT_PENDING 0x1: INTERRUPT_PENDING

0x0000A21A MPP3_INT_MID_SEL

Type: RW
Clock: PBUS_WRCLK
Reset State: 0x00
Reset Name: PERPH_RB

Selects the MID that will receive the interrupt

MPP3_INT_MID_SEL

Bits	Name	Description
1:0	INT_MID_SEL	0x0: MID0 0x1: MID1 0x2: MID2 0x3: MID3

0x0000A21B MPP3_INT_PRIORITY

Type: RW
Clock: PBUS_WRCLK
Reset State: 0x00
Reset Name: PERPH_RB

MPP3_INT_PRIORITY

Bits	Name	Description
0	INT_PRIORITY	0x0: SR 0x1: A

0x0000A240 MPP3_MODE_CTL

Type: RW
Clock: PBUS_WRCLK
Reset State: 0x00
Reset Name: PERPH_RB

MPP Mode allows you to switch from one mode to another mode in a single register write.

MPP3_MODE_CTL

Bits	Name	Description
6:4	MODE	MPP Type: 0x0: DIGITAL_INPUT 0x1: DIGITAL_OUTPUT 0x2: DIGITAL_IN_AND_OUT 0x3: RESERVED3 0x4: ANALOG_INPUT 0x5: ANALOG_OUTPUT 0x6: CURRENT_SINK 0x7: RESERVED7

MPP3_MODE_CTL (cont.)

Bits	Name	Description
3:0	EN_AND_SOURCE_SEL	When configured as a digital output Source select: 0000 = 0 0001 = 1 0010 = paired MPP 0011 = inverted paired MPP 0100 = Reserved 0101 = Reserved 0110 = Reserved 0111 = Reserved 1000 = DTEST1 1001 = inverted DTEST1 1010 = DTEST2 1011 = inverted DTEST2 1100 = DTEST3 1101 = inverted DTEST3 1110 = DTEST4 1111 = inverted DTEST4 Enable control when configured as AOUT, or Current Sink. MPP is enable whenever the selected condition is true. 0000 = 0 (mpp is always disabled) 0001 = 1 (mpp is always Enabled) 0010 = paired MPP 0011 = inverted paired MPP 0100 = Reserved 0101 = Reserved 0110 = Reserved 0111 = Reserved 1000 = DTEST1 1001 = inverted DTEST1 1010 = DTEST2 1011 = inverted DTEST2 1100 = DTEST3 1101 = inverted DTEST3 1110 = DTEST4 1111 = inverted DTEST4 0x0: LOW 0x0: LOW 0x1: HIGH 0x2: PAIRED_MPP 0x3: NOT_PAIRED_MPP 0x4: RESERVED4

MPP3_MODE_CTL (cont.)

Bits	Name	Description
		0x5: RESERVED5 0x6: RESERVED6 0x7: RESERVED7 0x8: DTEST1 0x9: NOT_DTEST1 0xA: DTEST2 0xB: NOT_DTEST2 0xC: DTEST3 0xD: NOT_DTEST3 0xE: DTEST4 0xF: NOT_DTEST4

0x0000A241 MPP3_DIG_VIN_CTL

Type: RW
Clock: PBUS_WRCLK
Reset State: 0x00
Reset Name: PERPH_RB

MPP3_DIG_VIN_CTL

Bits	Name	Description
2:0	VOLTAGE_SEL	Select Voltage source: 0x0: VIN0 0x1: VIN1 0x2: VIN2 0x3: VIN3

0x0000A243 MPP3_DIG_IN_CTL

Type: RW
Clock: PBUS_WRCLK
Reset State: 0x00
Reset Name: PERPH_RB

Enable DTEST buffers

MPP3_DIG_IN_CTL

Bits	Name	Description
3	DTEST4	Route to DTEST4 0x0: DTEST_DISABLED 0x1: DTEST_ENABLED

MPP3_DIG_IN_CTL (cont.)

Bits	Name	Description
2	DTEST3	Route to DTEST3 0x0: DTEST_DISABLED 0x1: DTEST_ENABLED
1	DTEST2	Route to DTEST2 0x0: DTEST_DISABLED 0x1: DTEST_ENABLED
0	DTEST1	Route to DTEST1 0x0: DTEST_DISABLED 0x1: DTEST_ENABLED

0x0000A246 MPP3_EN_CTL

Type: RW
Clock: PBUS_WRCLK
Reset State: 0x00
Reset Name: PERPH_RB

MPP3_EN_CTL

Bits	Name	Description
7	PERPH_EN	MPP Master enable 0 = puts MPP_PAD at high Z and disables the block 1 = MPP is enabled 0x0: MPP_DISABLED 0x1: MPP_ENABLED

0x0000A248 MPP3_ANA_OUT_CTL

Type: RW
Clock: PBUS_WRCLK
Reset State: 0x00
Reset Name: PERPH_RB

MPP3_ANA_OUT_CTL

Bits	Name	Description
2:0	REF_SEL	Analog Output Control 0: Output = vref_1V25 = REF_BYP pin, typically 1.25 Volts 1: Output = vref_V625 = 0.625 Volts (internal use only) 2: Output = vref_V3125 = 0.3125 Volts (internal use only) 3: Output = paired MPP input (internal use only) 4: Output = buffered ATEST1 (aka ABUS1) (internal use only) 5: Output = buffered ATEST2 (aka ABUS2) (internal use only) 6: Output = buffered ATEST3 (aka ABUS3) (internal use only) 7: Output = buffered ATEST4 (aka ABUS4) (internal use only) 0x0: VREF_1V25 0x0: VREF_1V25 0x1: VREF_0V625 0x2: VREF_0V3125 0x3: PAIRED_MPP 0x4: ATEST1 0x5: ATEST2 0x6: ATEST3 0x7: ATEST4

0x0000A24C MPP3_SINK_CTL

Type: RW
Clock: PBUS_WRCLK
Reset State: 0x00
Reset Name: PERPH_RB

MPP3_SINK_CTL

Bits	Name	Description
2:0	CURRENT_SEL	Current Sink Output Control 0x0: CURRENT_5MA 0x1: CURRENT_10MA 0x2: CURRENT_15MA 0x3: CURRENT_20MA 0x4: CURRENT_25MA 0x5: CURRENT_30MA 0x6: CURRENT_35MA 0x7: CURRENT_40MA

36 MPP4

0x0000A300 - RESERVED
0x0000A303

0x0000A304 MPP4_PERPH_TYPE

Type: R
Clock: PBUS_WRCLK
Reset State: 0x11
Reset Name: N/A

Peripheral Type

PMIC_CONSTANT

MPP4_PERPH_TYPE

Bits	Name	Description
7:0	TYPE	0x11: MPP

0x0000A305 MPP4_PERPH_SUBTYPE

Type: R
Clock: PBUS_WRCLK
Reset State: 0x04
Reset Name: N/A

Peripheral SubType

MPP4_PERPH_SUBTYPE

Bits	Name	Description
7:0	SUBTYPE	0x3: MPP_4CH_SINK 0x4: ULT_MPP_4CH_SINK 0x5: MPP_4CH_AOUT 0x6: ULT_MPP_4CH_AOUT 0x7: MPP_4CH_AOUT_SINK 0xB: MPP_8CH_SINK 0xD: MPP_8CH_AOUT 0xF: MPP_8CH_AOUT_SINK

0x0000A308 MPP4_STATUS1

Type: R
Clock: PBUS_WRCLK
Reset State: 0x00000000
Reset Name: N/A

Status Registers

MPP4_STATUS1

Bits	Name	Description
7	MPP_OK	DEF: X 0 = MPP is disabled 1 = MPP is enabled 0x0: MPP_DISABLED 0x1: MPP_ENABLED
0	MPP_VAL	DEF: X Value read by the input buffer, if enabled 0x0: MPP_INPUT_LOW 0x1: MPP_INPUT_HIGH

0x0000A310 MPP4_INT_RT_STS

Type: R
Clock: PBUS_WRCLK
Reset State: 0x00
Reset Name: N/A

Interrupt Real Time Status Bits

MPP4_INT_RT_STS

Bits	Name	Description
0	MPP_IN_STS	0x0: INT_RT_STATUS_LOW 0x1: INT_RT_STATUS_HIGH

0x0000A311 MPP4_INT_SET_TYPE

Type: RW
Clock: PBUS_WRCLK
Reset State: 0x00
Reset Name: PERPH_RB

0 = use level trigger interrupts, 1 = use edge trigger interrupts

MPP4_INT_SET_TYPE

Bits	Name	Description
0	MPP_IN_TYPE	0x0: LEVEL 0x1: EDGE

0x0000A312 MPP4_INT_POLARITY_HIGH

Type: RW
Clock: PBUS_WRCLK
Reset State: 0x00
Reset Name: PERPH_RB

1= Interrupt will trigger on a level high (rising edge) event, 0 = level high triggering is disabled

MPP4_INT_POLARITY_HIGH

Bits	Name	Description
0	MPP_IN_HIGH	0x0: HIGH_TRIGGER_DISABLED 0x1: HIGH_TRIGGER_ENABLED

0x0000A313 MPP4_INT_POLARITY_LOW

Type: RW
Clock: PBUS_WRCLK
Reset State: 0x00
Reset Name: PERPH_RB

1' = Interrupt will trigger on a level low (falling edge) event, '0' = level low triggering is disabled

MPP4_INT_POLARITY_LOW

Bits	Name	Description
0	MPP_IN_LOW	0x0: LOW_TRIGGER_DISABLED 0x1: LOW_TRIGGER_ENABLED

0x0000A314 MPP4_INT_LATCHED_CLR

Type: W
Clock: PBUS_WRCLK
Reset State: 0x00
Reset Name: PERPH_RB

writing a '1' to this interrupt will rearm the interrupt when an interrupt is pending. It clears the internal sticky and sent bits

MPP4_INT_LATCHED_CLR

Bits	Name	Description
0	MPP_IN_LATCHED_CLR	

0x0000A315 MPP4_INT_EN_SET

Type: RW
Clock: PBUS_WRCLK
Reset State: 0x00
Reset Name: PERPH_RB

writing '0' to this register has no effect. Writing a '1' will enable the corresponding interrupt. Reading this register will readback enable status

PMIC_SET_MASK

MPP4_INT_EN_SET

Bits	Name	Description
0	MPP_IN_EN_SET	0x0: INT_DISABLED 0x1: INT_ENABLED

0x0000A316 MPP4_INT_EN_CLR

Type: RW
Clock: PBUS_WRCLK
Reset State: 0x00
Reset Name: PERPH_RB

writing '0' to this register has no effect. Writing a '1' will disable the corresponding interrupt. Reading this register will readback enable status

PMIC_CLR_MASK=INT_EN_SET

MPP4_INT_EN_CLR

Bits	Name	Description
0	MPP_IN_EN_CLR	0x0: INT_DISABLED 0x1: INT_ENABLED

0x0000A318 MPP4_INT_LATCHED_STS

Type: R
Clock: PBUS_WRCLK
Reset State: 0x00
Reset Name: N/A

Latched (Sticky) Interrupt. '1' indicates that the interrupt has triggered. Once the latched bit is set it can only be cleared by writing the clear bit.

MPP4_INT_LATCHED_STS

Bits	Name	Description
0	MPP_IN_LATCHED_STS	0x0: NO_INT_LATCHED 0x1: INTERRUPT_LATCHED

0x0000A319 MPP4_INT_PENDING_STS

Type: R
Clock: PBUS_WRCLK
Reset State: 0x00
Reset Name: N/A

Debug: Pending is set if interrupt has been sent but not cleared.

MPP4_INT_PENDING_STS

Bits	Name	Description
0	MPP_IN_PENDING_STS	0x0: NO_INT_PENDING 0x1: INTERRUPT_PENDING

0x0000A31A MPP4_INT_MID_SEL

Type: RW
Clock: PBUS_WRCLK
Reset State: 0x00
Reset Name: PERPH_RB

Selects the MID that will receive the interrupt

MPP4_INT_MID_SEL

Bits	Name	Description
1:0	INT_MID_SEL	0x0: MID0 0x1: MID1 0x2: MID2 0x3: MID3

0x0000A31B MPP4_INT_PRIORITY

Type: RW
Clock: PBUS_WRCLK
Reset State: 0x00
Reset Name: PERPH_RB

MPP4_INT_PRIORITY

Bits	Name	Description
0	INT_PRIORITY	0x0: SR 0x1: A

0x0000A340 MPP4_MODE_CTL

Type: RW
Clock: PBUS_WRCLK
Reset State: 0x00
Reset Name: PERPH_RB

MPP Mode allows you to switch from one mode to another mode in a single register write.

MPP4_MODE_CTL

Bits	Name	Description
6:4	MODE	MPP Type: 0x0: DIGITAL_INPUT 0x1: DIGITAL_OUTPUT 0x2: DIGITAL_IN_AND_OUT 0x3: RESERVED3 0x4: ANALOG_INPUT 0x5: ANALOG_OUTPUT 0x6: CURRENT_SINK 0x7: RESERVED7

MPP4_MODE_CTL (cont.)

Bits	Name	Description
3:0	EN_AND_SOURCE_SEL	When configured as a digital output Source select: 0000 = 0 0001 = 1 0010 = paired MPP 0011 = inverted paired MPP 0100 = Reserved 0101 = Reserved 0110 = Reserved 0111 = Reserved 1000 = DTEST1 1001 = inverted DTEST1 1010 = DTEST2 1011 = inverted DTEST2 1100 = DTEST3 1101 = inverted DTEST3 1110 = DTEST4 1111 = inverted DTEST4 Enable control when configured as AOUT, or Current Sink. MPP is enable whenever the selected condition is true. 0000 = 0 (mpp is always disabled) 0001 = 1 (mpp is always Enabled) 0010 = paired MPP 0011 = inverted paired MPP 0100 = Reserved 0101 = Reserved 0110 = Reserved 0111 = Reserved 1000 = DTEST1 1001 = inverted DTEST1 1010 = DTEST2 1011 = inverted DTEST2 1100 = DTEST3 1101 = inverted DTEST3 1110 = DTEST4 1111 = inverted DTEST4 0x0: LOW 0x1: HIGH 0x2: PAIRED_MPP 0x3: NOT_PAIRED_MPP 0x4: RESERVED4

MPP4_MODE_CTL (cont.)

Bits	Name	Description
		0x5: RESERVED5 0x6: RESERVED6 0x7: RESERVED7 0x8: DTEST1 0x9: NOT_DTEST1 0xA: DTEST2 0xB: NOT_DTEST2 0xC: DTEST3 0xD: NOT_DTEST3 0xE: DTEST4 0xF: NOT_DTEST4

0x0000A341 MPP4_DIG_VIN_CTL

Type: RW
Clock: PBUS_WRCLK
Reset State: 0x00
Reset Name: PERPH_RB

MPP4_DIG_VIN_CTL

Bits	Name	Description
2:0	VOLTAGE_SEL	Select Voltage source: 0x0: VIN0 0x1: VIN1 0x2: VIN2 0x3: VIN3

0x0000A343 MPP4_DIG_IN_CTL

Type: RW
Clock: PBUS_WRCLK
Reset State: 0x00
Reset Name: PERPH_RB

Enable DTEST buffers

MPP4_DIG_IN_CTL

Bits	Name	Description
3	DTEST4	Route to DTEST4 0x0: DTEST_DISABLED 0x1: DTEST_ENABLED

MPP4_DIG_IN_CTL (cont.)

Bits	Name	Description
2	DTEST3	Route to DTEST3 0x0: DTEST_DISABLED 0x1: DTEST_ENABLED
1	DTEST2	Route to DTEST2 0x0: DTEST_DISABLED 0x1: DTEST_ENABLED
0	DTEST1	Route to DTEST1 0x0: DTEST_DISABLED 0x1: DTEST_ENABLED

0x0000A346 MPP4_EN_CTL

Type: RW
Clock: PBUS_WRCLK
Reset State: 0x00
Reset Name: PERPH_RB

MPP4_EN_CTL

Bits	Name	Description
7	PERPH_EN	MPP Master enable 0 = puts MPP_PAD at high Z and disables the block 1 = MPP is enabled 0x0: MPP_DISABLED 0x1: MPP_ENABLED

0x0000A348 MPP4_ANA_OUT_CTL

Type: RW
Clock: PBUS_WRCLK
Reset State: 0x00
Reset Name: PERPH_RB

MPP4_ANA_OUT_CTL

Bits	Name	Description
2:0	REF_SEL	Analog Output Control 0: Output = vref_1V25 = REF_BYP pin, typically 1.25 Volts 1: Output = vref_V625 = 0.625 Volts (internal use only) 2: Output = vref_V3125 = 0.3125 Volts (internal use only) 3: Output = paired MPP input (internal use only) 4: Output = buffered ATEST1 (aka ABUS1) (internal use only) 5: Output = buffered ATEST2 (aka ABUS2) (internal use only) 6: Output = buffered ATEST3 (aka ABUS3) (internal use only) 7: Output = buffered ATEST4 (aka ABUS4) (internal use only) 0x0: VREF_1V25 0x1: VREF_0V625 0x2: VREF_0V3125 0x3: PAIRED_MPP 0x4: ATEST1 0x5: ATEST2 0x6: ATEST3 0x7: ATEST4

0x0000A34A MPP4_ANA_IN_CTL

Type: RW
Clock: PBUS_WRCLK
Reset State: 0x00
Reset Name: PERPH_RB

MPP4_ANA_IN_CTL

Bits	Name	Description
2:0	ROUTE_SEL	AMUX Channel Control 0: Route to hkadc5 1: Route to hkadc6 2: Route to hkadc7 3: Route to hkadc8 4: Route to ATEST1 (aka ABUS1) (internal use only) 5: Route to ATEST2 (aka ABUS2) (internal use only) 6: Route to ATEST3 (aka ABUS3) (internal use only) 7: Route to ATEST4 (aka ABUS4) (internal use only) 0x0: HKADC5 0x1: HKADC6 0x2: HKADC7 0x3: HKADC8 0x4: ATEST1 0x5: ATEST2 0x6: ATEST3 0x7: ATEST4

0x0000A34C MPP4_SINK_CTL

Type: RW
Clock: PBUS_WRCLK
Reset State: 0x00
Reset Name: PERPH_RB

MPP4_SINK_CTL

Bits	Name	Description
2:0	CURRENT_SEL	Current Sink Output Control 0x0: CURRENT_5MA 0x1: CURRENT_10MA 0x2: CURRENT_15MA 0x3: CURRENT_20MA 0x4: CURRENT_25MA 0x5: CURRENT_30MA 0x6: CURRENT_35MA 0x7: CURRENT_40MA

37 GPIO1

0x0000C000 - RESERVED
0x0000C003

0x0000C004 GPIO1_PERPH_TYPE

Type: R
Clock: PBUS_WRCLK
Reset State: 0x10
Reset Name: N/A

Peripheral Type

PMIC_CONSTANT

GPIO1_PERPH_TYPE

Bits	Name	Description
7:0	TYPE	0x10: GPIO

0x0000C005 GPIO1_PERPH_SUBTYPE

Type: R
Clock: PBUS_WRCLK
Reset State: 0x05
Reset Name: N/A

Peripheral SubType

GPIO1_PERPH_SUBTYPE

Bits	Name	Description
7:0	SUBTYPE	0x1: GPIO_4CH 0x5: GPIOC_4CH 0x9: GPIO_8CH 0xD: GPIOC_8CH

0x0000C008 GPIO1_STATUS1

Type: R
Clock: PBUS_WRCLK
Reset State: 0x00000000
Reset Name: N/A

Status Registers

GPIO1_STATUS1

Bits	Name	Description
7	GPIO_OK	DEF: X 0x0: GPIO_DISABLED 0x1: GPIO_ENABLED
0	GPIO_VAL	DEF: X Value read by the input buffer, if enabled 0x0: GPIO_INPUT_LOW 0x1: GPIO_INPUT_HIGH

0x0000C010 GPIO1_INT_RT_STS

Type: R
Clock: PBUS_WRCLK
Reset State: 0x00
Reset Name: N/A

Interrupt Real Time Status Bits

GPIO1_INT_RT_STS

Bits	Name	Description
0	GPIO_IN_STS	0x0: INT_RT_STATUS_LOW 0x1: INT_RT_STATUS_HIGH

0x0000C011 GPIO1_INT_SET_TYPE

Type: RW
Clock: PBUS_WRCLK
Reset State: 0x00
Reset Name: PERPH_RB

0 = use level trigger interrupts, 1 = use edge trigger interrupts

GPIO1_INT_SET_TYPE

Bits	Name	Description
0	GPIO_IN_TYPE	0x0: LEVEL 0x1: EDGE

0x0000C012 GPIO1_INT_POLARITY_HIGH

Type: RW
Clock: PBUS_WRCLK
Reset State: 0x00
Reset Name: PERPH_RB

1= Interrupt will trigger on a level high (rising edge) event, 0 = level high triggering is disabled

GPIO1_INT_POLARITY_HIGH

Bits	Name	Description
0	GPIO_IN_HIGH	0x0: HIGH_TRIGGER_DISABLED 0x1: HIGH_TRIGGER_ENABLED

0x0000C013 GPIO1_INT_POLARITY_LOW

Type: RW
Clock: PBUS_WRCLK
Reset State: 0x00
Reset Name: PERPH_RB

1 = Interrupt will trigger on a level low (falling edge) event, 0 = level low triggering is disabled

GPIO1_INT_POLARITY_LOW

Bits	Name	Description
0	GPIO_IN_LOW	0x0: LOW_TRIGGER_DISABLED 0x1: LOW_TRIGGER_ENABLED

0x0000C014 GPIO1_INT_LATCHED_CLR

Type: W
Clock: PBUS_WRCLK
Reset State: 0x00
Reset Name: PERPH_RB

writing a 1 to this interrupt will rearm the interrupt when an interrupt is pending. It clears the internal sticky and sent bits

GPIO1_INT_LATCHED_CLR

Bits	Name	Description
0	GPIO_IN_LATCHED_CLR	

0x0000C015 GPIO1_INT_EN_SET

Type: RW
Clock: PBUS_WRCLK
Reset State: 0x00
Reset Name: PERPH_RB

writing 0 to this register has no effect. Writing a 1 will enable the corresponding interrupt. Reading this register will readback enable status

PMIC_SET_MASK

GPIO1_INT_EN_SET

Bits	Name	Description
0	GPIO_IN_EN_SET	0x0: INT_DISABLED 0x1: INT_ENABLED

0x0000C016 GPIO1_INT_EN_CLR

Type: RW
Clock: PBUS_WRCLK
Reset State: 0x00
Reset Name: PERPH_RB

writing 0 to this register has no effect. Writing a 1 will disable the corresponding interrupt. Reading this register will readback enable status

PMIC_CLR_MASK=INT_EN_SET

GPIO1_INT_EN_CLR

Bits	Name	Description
0	GPIO_IN_EN_CLR	0x0: INT_DISABLED 0x1: INT_ENABLED

0x0000C018 GPIO1_INT_LATCHED_STS

Type: R
Clock: PBUS_WRCLK
Reset State: 0x00
Reset Name: N/A

Debug: Latched (Sticky) Interrupt. 1 indicates that the interrupt has triggered. Once the latched bit is set it can only be cleared by writing the clear bit.

GPIO1_INT_LATCHED_STS

Bits	Name	Description
0	GPIO_IN_LATCHED_STS	0x0: NO_INT_LATCHED 0x1: INTERRUPT_LATCHED

0x0000C019 GPIO1_INT_PENDING_STS

Type: R
Clock: PBUS_WRCLK
Reset State: 0x00
Reset Name: N/A

Debug: Pending is set if interrupt has been sent but not cleared.

GPIO1_INT_PENDING_STS

Bits	Name	Description
0	GPIO_IN_PENDING_STS	0x0: NO_INT_PENDING 0x1: INTERRUPT_PENDING

0x0000C01A GPIO1_INT_MID_SEL

Type: RW
Clock: PBUS_WRCLK
Reset State: 0x00
Reset Name: PERPH_RB

Selects the MID that will receive the interrupt

GPIO1_INT_MID_SEL

Bits	Name	Description
1:0	INT_MID_SEL	0x0: MID0 0x1: MID1 0x2: MID2 0x3: MID3

0x0000C01B GPIO1_INT_PRIORITY

Type: RW
Clock: PBUS_WRCLK
Reset State: 0x00
Reset Name: PERPH_RB

SR=0 A=1

GPIO1_INT_PRIORITY

Bits	Name	Description
0	INT_PRIORITY	0x0: SR 0x1: A

0x0000C040 GPIO1_MODE_CTL

Type: RW
Clock: PBUS_WRCLK
Reset State: 0x00
Reset Name: PERPH_RB

GPIO Mode allows you to switch from one mode to another mode in a single register write.

GPIO1_MODE_CTL

Bits	Name	Description
6:4	MODE	GPIO Mode: 0x0: DIGITAL_INPUT 0x1: DIGITAL_OUTPUT 0x2: DIGITAL_IN_AND_OUT 0x3: RESERVED

GPIO1_MODE_CTL (cont.)

Bits	Name	Description
3:0	EN_AND_SOURCE_SEL	Output Source select: (Note: bit zero is effectively an invert bit (every odd entry is inverted) 0x0: LOW 0x1: HIGH 0x2: PAIRED_GPIO 0x3: NOT_PAIRED_GPIO 0x4: SPECIAL_FUNCTION1 0x5: NOT_SPECIAL_FUNCTION1 0x6: SPECIAL_FUNCTION2 0x7: NOT_SPECIAL_FUNCTION2 0x8: DTEST1 0x9: NOT_DTEST1 0xA: DTEST2 0xB: NOT_DTEST2 0xC: DTEST3 0xD: NOT_DTEST3 0xE: DTEST4 0xF: NOT_DTEST4

0x0000C041 GPIO1_DIG_VIN_CTL

Type: RW
Clock: PBUS_WRCLK
Reset State: 0x00
Reset Name: PERPH_RB

GPIO1_DIG_VIN_CTL

Bits	Name	Description
2:0	VOLTAGE_SEL	Select Voltage source: 0x0: VIN0 0x1: VIN1 0x2: VIN2 0x3: VIN3 0x4: RESERVED4 0x5: RESERVED5 0x6: RESERVED6 0x7: RESERVED7

0x0000C042 GPIO1_DIG_PULL_CTL

Type: RW
Clock: PBUS_WRCLK
Reset State: 0x04
Reset Name: PERPH_RB

GPIO1_DIG_PULL_CTL

Bits	Name	Description
2:0	PULLUP_SEL	Current source pulls: (Note: HW disables pulls for modes other than input and open-drain output) 0x0: PULLUP_30UA 0x1: PULLUP_1P5UA 0x2: PULLUP_31P5UA 0x3: PULLUP_1P5UA_30UA_BOOST 0x4: PULLDOWN_10UA 0x5: NO_PULL 0x6: RESERVED6 0x7: RESERVED7

0x0000C043 GPIO1_DIG_IN_CTL

Type: RW
Clock: PBUS_WRCLK
Reset State: 0x00
Reset Name: PERPH_RB

Enable DTEST buffers

GPIO1_DIG_IN_CTL

Bits	Name	Description
3	DTEST4	Route to DTEST4 0x0: DTEST_DISABLED 0x1: DTEST_ENABLED
2	DTEST3	Route to DTEST3 0x0: DTEST_DISABLED 0x1: DTEST_ENABLED
1	DTEST2	Route to DTEST2 0x0: DTEST_DISABLED 0x1: DTEST_ENABLED
0	DTEST1	Route to DTEST1 0x0: DTEST_DISABLED 0x1: DTEST_ENABLED

0x0000C045 GPIO1_DIG_OUT_CTL

Type: RW
Clock: PBUS_WRCLK
Reset State: 0x01
Reset Name: PERPH_RB

GPIO1_DIG_OUT_CTL

Bits	Name	Description
5:4	OUTPUT_TYPE	Output buffer configuration 10= open drain PMOS (only drive high) 01=open drain NMOS (only drive low, i.e. I2C) 00=CMOS (drive high and low) Open drain not supported in GPIOC flavor 0x0: CMOS 0x1: OPEN_HIGH 0x2: OPEN_LOW
1:0	OUTPUT_DRV_SEL	Output buffer drive strength: 0x0: RESERVED 0x1: LOW 0x2: MED 0x3: HIGH

0x0000C046 GPIO1_EN_CTL

Type: RW
Clock: PBUS_WRCLK
Reset State: 0x80
Reset Name: PERPH_RB

GPIO1_EN_CTL

Bits	Name	Description
7	PERPH_EN	GPIO Master Enable 0 = puts GPIO_PAD at high Z and disables the block 1 = GPIO is enabled 0x0: GPIO_DISABLED 0x1: GPIO_ENABLED

38 GPIO2

0x0000C100 - RESERVED
0x0000C103

0x0000C104 GPIO2_PERPH_TYPE

Type: R
Clock: PBUS_WRCLK
Reset State: 0x10
Reset Name: N/A

Peripheral Type

PMIC_CONSTANT

GPIO2_PERPH_TYPE

Bits	Name	Description
7:0	TYPE	0x10: GPIO

0x0000C105 GPIO2_PERPH_SUBTYPE

Type: R
Clock: PBUS_WRCLK
Reset State: 0x05
Reset Name: N/A

Peripheral SubType

GPIO2_PERPH_SUBTYPE

Bits	Name	Description
7:0	SUBTYPE	0x1: GPIO_4CH 0x5: GPIOC_4CH 0x9: GPIO_8CH 0xD: GPIOC_8CH

0x0000C108 GPIO2_STATUS1

Type: R
Clock: PBUS_WRCLK
Reset State: 0x00000000
Reset Name: N/A

Status Registers

GPIO2_STATUS1

Bits	Name	Description
7	GPIO_OK	DEF: X 0x0: GPIO_DISABLED 0x1: GPIO_ENABLED
0	GPIO_VAL	DEF: X Value read by the input buffer, if enabled 0x0: GPIO_INPUT_LOW 0x1: GPIO_INPUT_HIGH

0x0000C110 GPIO2_INT_RT_STS

Type: R
Clock: PBUS_WRCLK
Reset State: 0x00
Reset Name: N/A

Interrupt Real Time Status Bits

GPIO2_INT_RT_STS

Bits	Name	Description
0	GPIO_IN_STS	0x0: INT_RT_STATUS_LOW 0x1: INT_RT_STATUS_HIGH

0x0000C111 GPIO2_INT_SET_TYPE

Type: RW
Clock: PBUS_WRCLK
Reset State: 0x00
Reset Name: PERPH_RB

0 = use level trigger interrupts, 1 = use edge trigger interrupts

GPIO2_INT_SET_TYPE

Bits	Name	Description
0	GPIO_IN_TYPE	0x0: LEVEL 0x1: EDGE

0x0000C112 GPIO2_INT_POLARITY_HIGH

Type: RW
Clock: PBUS_WRCLK
Reset State: 0x00
Reset Name: PERPH_RB

1= Interrupt will trigger on a level high (rising edge) event, 0 = level high triggering is disabled

GPIO2_INT_POLARITY_HIGH

Bits	Name	Description
0	GPIO_IN_HIGH	0x0: HIGH_TRIGGER_DISABLED 0x1: HIGH_TRIGGER_ENABLED

0x0000C113 GPIO2_INT_POLARITY_LOW

Type: RW
Clock: PBUS_WRCLK
Reset State: 0x00
Reset Name: PERPH_RB

1 = Interrupt will trigger on a level low (falling edge) event, 0 = level low triggering is disabled

GPIO2_INT_POLARITY_LOW

Bits	Name	Description
0	GPIO_IN_LOW	0x0: LOW_TRIGGER_DISABLED 0x1: LOW_TRIGGER_ENABLED

0x0000C114 GPIO2_INT_LATCHED_CLR

Type: W
Clock: PBUS_WRCLK
Reset State: 0x00
Reset Name: PERPH_RB

writing a 1 to this interrupt will rearm the interrupt when an interrupt is pending. It clears the internal sticky and sent bits

GPIO2_INT_LATCHED_CLR

Bits	Name	Description
0	GPIO_IN_LATCHED_CLR	

0x0000C115 GPIO2_INT_EN_SET

Type: RW
Clock: PBUS_WRCLK
Reset State: 0x00
Reset Name: PERPH_RB

writing 0 to this register has no effect. Writing a 1 will enable the corresponding interrupt. Reading this register will readback enable status

PMIC_SET_MASK

GPIO2_INT_EN_SET

Bits	Name	Description
0	GPIO_IN_EN_SET	0x0: INT_DISABLED 0x1: INT_ENABLED

0x0000C116 GPIO2_INT_EN_CLR

Type: RW
Clock: PBUS_WRCLK
Reset State: 0x00
Reset Name: PERPH_RB

writing 0 to this register has no effect. Writing a 1 will disable the corresponding interrupt. Reading this register will readback enable status

PMIC_CLR_MASK=INT_EN_SET

GPIO2_INT_EN_CLR

Bits	Name	Description
0	GPIO_IN_EN_CLR	0x0: INT_DISABLED 0x1: INT_ENABLED

0x0000C118 GPIO2_INT_LATCHED_STS

Type: R
Clock: PBUS_WRCLK
Reset State: 0x00
Reset Name: N/A

Debug: Latched (Sticky) Interrupt. 1 indicates that the interrupt has triggered. Once the latched bit is set it can only be cleared by writing the clear bit.

GPIO2_INT_LATCHED_STS

Bits	Name	Description
0	GPIO_IN_LATCHED_STS	0x0: NO_INT_LATCHED 0x1: INTERRUPT_LATCHED

0x0000C119 GPIO2_INT_PENDING_STS

Type: R
Clock: PBUS_WRCLK
Reset State: 0x00
Reset Name: N/A

Debug: Pending is set if interrupt has been sent but not cleared.

GPIO2_INT_PENDING_STS

Bits	Name	Description
0	GPIO_IN_PENDING_STS	0x0: NO_INT_PENDING 0x1: INTERRUPT_PENDING

0x0000C11A GPIO2_INT_MID_SEL

Type: RW
Clock: PBUS_WRCLK
Reset State: 0x00
Reset Name: PERPH_RB

Selects the MID that will receive the interrupt

GPIO2_INT_MID_SEL

Bits	Name	Description
1:0	INT_MID_SEL	0x0: MID0 0x1: MID1 0x2: MID2 0x3: MID3

0x0000C11B GPIO2_INT_PRIORITY

Type: RW
Clock: PBUS_WRCLK
Reset State: 0x00
Reset Name: PERPH_RB

SR=0 A=1

GPIO2_INT_PRIORITY

Bits	Name	Description
0	INT_PRIORITY	0x0: SR 0x1: A

0x0000C140 GPIO2_MODE_CTL

Type: RW
Clock: PBUS_WRCLK
Reset State: 0x00
Reset Name: PERPH_RB

GPIO Mode allows you to switch from one mode to another mode in a single register write.

GPIO2_MODE_CTL

Bits	Name	Description
6:4	MODE	GPIO Mode: 0x0: DIGITAL_INPUT 0x1: DIGITAL_OUTPUT 0x2: DIGITAL_IN_AND_OUT 0x3: RESERVED

GPIO2_MODE_CTL (cont.)

Bits	Name	Description
3:0	EN_AND_SOURCE_SEL	Output Source select: (Note: bit zero is effectively an invert bit (every odd entry is inverted) 0x0: LOW 0x1: HIGH 0x2: PAIRED_GPIO 0x3: NOT_PAIRED_GPIO 0x4: SPECIAL_FUNCTION1 0x5: NOT_SPECIAL_FUNCTION1 0x6: SPECIAL_FUNCTION2 0x7: NOT_SPECIAL_FUNCTION2 0x8: DTEST1 0x9: NOT_DTEST1 0xA: DTEST2 0xB: NOT_DTEST2 0xC: DTEST3 0xD: NOT_DTEST3 0xE: DTEST4 0xF: NOT_DTEST4

0x0000C141 GPIO2_DIG_VIN_CTL

Type: RW
Clock: PBUS_WRCLK
Reset State: 0x00
Reset Name: PERPH_RB

GPIO2_DIG_VIN_CTL

Bits	Name	Description
2:0	VOLTAGE_SEL	Select Voltage source: 0x0: VIN0 0x1: VIN1 0x2: VIN2 0x3: VIN3 0x4: RESERVED4 0x5: RESERVED5 0x6: RESERVED6 0x7: RESERVED7

0x0000C142 GPIO2_DIG_PULL_CTL

Type: RW
Clock: PBUS_WRCLK
Reset State: 0x04
Reset Name: PERPH_RB

GPIO2_DIG_PULL_CTL

Bits	Name	Description
2:0	PULLUP_SEL	Current source pulls: (Note: HW disables pulls for modes other than input and open-drain output) 0x0: PULLUP_30UA 0x0: PULLUP_30UA 0x1: PULLUP_1P5UA 0x2: PULLUP_31P5UA 0x3: PULLUP_1P5UA_30UA_BOOST 0x4: PULLDOWN_10UA 0x5: NO_PULL 0x6: RESERVED6 0x7: RESERVED7

0x0000C143 GPIO2_DIG_IN_CTL

Type: RW
Clock: PBUS_WRCLK
Reset State: 0x00
Reset Name: PERPH_RB

Enable DTEST buffers

GPIO2_DIG_IN_CTL

Bits	Name	Description
3	DTEST4	Route to DTEST4 0x0: DTEST_DISABLED 0x1: DTEST_ENABLED
2	DTEST3	Route to DTEST3 0x0: DTEST_DISABLED 0x1: DTEST_ENABLED
1	DTEST2	Route to DTEST2 0x0: DTEST_DISABLED 0x1: DTEST_ENABLED
0	DTEST1	Route to DTEST1 0x0: DTEST_DISABLED 0x1: DTEST_ENABLED

0x0000C145 GPIO2_DIG_OUT_CTL

Type: RW
Clock: PBUS_WRCLK
Reset State: 0x01
Reset Name: PERPH_RB

GPIO2_DIG_OUT_CTL

Bits	Name	Description
5:4	OUTPUT_TYPE	Output buffer configuration 10= open drain PMOS (only drive high) 01=open drain NMOS (only drive low, i.e. I2C) 00=CMOS (drive high and low) Open drain not supported in GPIOC flavor 0x0: CMOS 0x1: OPEN_HIGH 0x2: OPEN_LOW
1:0	OUTPUT_DRV_SEL	Output buffer drive strength: 0x0: RESERVED 0x1: LOW 0x2: MED 0x3: HIGH

0x0000C146 GPIO2_EN_CTL

Type: RW
Clock: PBUS_WRCLK
Reset State: 0x80
Reset Name: PERPH_RB

GPIO2_EN_CTL

Bits	Name	Description
7	PERPH_EN	GPIO Master Enable 0 = puts GPIO_PAD at high Z and disables the block 1 = GPIO is enabled 0x0: GPIO_DISABLED 0x1: GPIO_ENABLED

39 GPIO3

0x0000C200 - RESERVED
0x0000C203

0x0000C204 GPIO3_PERPH_TYPE

Type: R
Clock: PBUS_WRCLK
Reset State: 0x10
Reset Name: N/A

Peripheral Type

PMIC_CONSTANT

GPIO3_PERPH_TYPE

Bits	Name	Description
7:0	TYPE	0x10: GPIO

0x0000C205 GPIO3_PERPH_SUBTYPE

Type: R
Clock: PBUS_WRCLK
Reset State: 0x01
Reset Name: N/A

Peripheral SubType

GPIO3_PERPH_SUBTYPE

Bits	Name	Description
7:0	SUBTYPE	0x1: GPIO_4CH 0x5: GPIOC_4CH 0x9: GPIO_8CH 0xD: GPIOC_8CH

0x0000C208 GPIO3_STATUS1

Type: R
Clock: PBUS_WRCLK
Reset State: 0x00000000
Reset Name: N/A

Status Registers

GPIO3_STATUS1

Bits	Name	Description
7	GPIO_OK	DEF: X 0x0: GPIO_DISABLED 0x1: GPIO_ENABLED
0	GPIO_VAL	DEF: X Value read by the input buffer, if enabled 0x0: GPIO_INPUT_LOW 0x1: GPIO_INPUT_HIGH

0x0000C210 GPIO3_INT_RT_STS

Type: R
Clock: PBUS_WRCLK
Reset State: 0x00
Reset Name: N/A

Interrupt Real Time Status Bits

GPIO3_INT_RT_STS

Bits	Name	Description
0	GPIO_IN_STS	0x0: INT_RT_STATUS_LOW 0x1: INT_RT_STATUS_HIGH

0x0000C211 GPIO3_INT_SET_TYPE

Type: RW
Clock: PBUS_WRCLK
Reset State: 0x00
Reset Name: PERPH_RB

0 = use level trigger interrupts, 1 = use edge trigger interrupts

GPIO3_INT_SET_TYPE

Bits	Name	Description
0	GPIO_IN_TYPE	0x0: LEVEL 0x1: EDGE

0x0000C212 GPIO3_INT_POLARITY_HIGH

Type: RW
Clock: PBUS_WRCLK
Reset State: 0x00
Reset Name: PERPH_RB

1= Interrupt will trigger on a level high (rising edge) event, 0 = level high triggering is disabled

GPIO3_INT_POLARITY_HIGH

Bits	Name	Description
0	GPIO_IN_HIGH	0x0: HIGH_TRIGGER_DISABLED 0x1: HIGH_TRIGGER_ENABLED

0x0000C213 GPIO3_INT_POLARITY_LOW

Type: RW
Clock: PBUS_WRCLK
Reset State: 0x00
Reset Name: PERPH_RB

1 = Interrupt will trigger on a level low (falling edge) event, 0 = level low triggering is disabled

GPIO3_INT_POLARITY_LOW

Bits	Name	Description
0	GPIO_IN_LOW	0x0: LOW_TRIGGER_DISABLED 0x1: LOW_TRIGGER_ENABLED

0x0000C214 GPIO3_INT_LATCHED_CLR

Type: W
Clock: PBUS_WRCLK
Reset State: 0x00
Reset Name: PERPH_RB

writing a 1 to this interrupt will rearm the interrupt when an interrupt is pending. It clears the internal sticky and sent bits

GPIO3_INT_LATCHED_CLR

Bits	Name	Description
0	GPIO_IN_LATCHED_CLR	

0x0000C215 GPIO3_INT_EN_SET

Type: RW
Clock: PBUS_WRCLK
Reset State: 0x00
Reset Name: PERPH_RB

writing 0 to this register has no effect. Writing a 1 will enable the corresponding interrupt. Reading this register will readback enable status

PMIC_SET_MASK

GPIO3_INT_EN_SET

Bits	Name	Description
0	GPIO_IN_EN_SET	0x0: INT_DISABLED 0x1: INT_ENABLED

0x0000C216 GPIO3_INT_EN_CLR

Type: RW
Clock: PBUS_WRCLK
Reset State: 0x00
Reset Name: PERPH_RB

writing 0 to this register has no effect. Writing a 1 will disable the corresponding interrupt. Reading this register will readback enable status

PMIC_CLR_MASK=INT_EN_SET

GPIO3_INT_EN_CLR

Bits	Name	Description
0	GPIO_IN_EN_CLR	0x0: INT_DISABLED 0x1: INT_ENABLED

0x0000C218 GPIO3_INT_LATCHED_STS

Type: R
Clock: PBUS_WRCLK
Reset State: 0x00
Reset Name: N/A

Debug: Latched (Sticky) Interrupt. 1 indicates that the interrupt has triggered. Once the latched bit is set it can only be cleared by writing the clear bit.

GPIO3_INT_LATCHED_STS

Bits	Name	Description
0	GPIO_IN_LATCHED_STS	0x0: NO_INT_LATCHED 0x1: INTERRUPT_LATCHED

0x0000C219 GPIO3_INT_PENDING_STS

Type: R
Clock: PBUS_WRCLK
Reset State: 0x00
Reset Name: N/A

Debug: Pending is set if interrupt has been sent but not cleared.

GPIO3_INT_PENDING_STS

Bits	Name	Description
0	GPIO_IN_PENDING_STS	0x0: NO_INT_PENDING 0x1: INTERRUPT_PENDING

0x0000C21A GPIO3_INT_MID_SEL

Type: RW
Clock: PBUS_WRCLK
Reset State: 0x00
Reset Name: PERPH_RB

Selects the MID that will receive the interrupt

GPIO3_INT_MID_SEL

Bits	Name	Description
1:0	INT_MID_SEL	0x0: MID0 0x0: MID0 0x1: MID1 0x2: MID2 0x3: MID3

0x0000C21B GPIO3_INT_PRIORITY

Type: RW
Clock: PBUS_WRCLK
Reset State: 0x00
Reset Name: PERPH_RB

SR=0 A=1

GPIO3_INT_PRIORITY

Bits	Name	Description
0	INT_PRIORITY	0x0: SR 0x1: A

0x0000C240 GPIO3_MODE_CTL

Type: RW
Clock: PBUS_WRCLK
Reset State: 0x00
Reset Name: PERPH_RB

GPIO Mode allows you to switch from one mode to another mode in a single register write.

GPIO3_MODE_CTL

Bits	Name	Description
6:4	MODE	GPIO Mode: 0x0: DIGITAL_INPUT 0x1: DIGITAL_OUTPUT 0x2: DIGITAL_IN_AND_OUT 0x3: RESERVED

GPIO3_MODE_CTL (cont.)

Bits	Name	Description
3:0	EN_AND_SOURCE_SEL	Output Source select: (Note: bit zero is effectively an invert bit (every odd entry is inverted) 0x0: LOW 0x1: HIGH 0x2: PAIRED_GPIO 0x3: NOT_PAIRED_GPIO 0x4: SPECIAL_FUNCTION1 0x5: NOT_SPECIAL_FUNCTION1 0x6: SPECIAL_FUNCTION2 0x7: NOT_SPECIAL_FUNCTION2 0x8: DTEST1 0x9: NOT_DTEST1 0xA: DTEST2 0xB: NOT_DTEST2 0xC: DTEST3 0xD: NOT_DTEST3 0xE: DTEST4 0xF: NOT_DTEST4

0x0000C241 GPIO3_DIG_VIN_CTL

Type: RW
Clock: PBUS_WRCLK
Reset State: 0x00
Reset Name: PERPH_RB

GPIO3_DIG_VIN_CTL

Bits	Name	Description
2:0	VOLTAGE_SEL	Select Voltage source: 0x0: VIN0 0x1: VIN1 0x2: VIN2 0x3: VIN3 0x4: RESERVED4 0x5: RESERVED5 0x6: RESERVED6 0x7: RESERVED7

0x0000C242 GPIO3_DIG_PULL_CTL

Type: RW
Clock: PBUS_WRCLK
Reset State: 0x04
Reset Name: PERPH_RB

GPIO3_DIG_PULL_CTL

Bits	Name	Description
2:0	PULLUP_SEL	Current source pulls: (Note: HW disables pulls for modes other than input and open-drain output) 0x0: PULLUP_30UA 0x1: PULLUP_1P5UA 0x2: PULLUP_31P5UA 0x3: PULLUP_1P5UA_30UA_BOOST 0x4: PULLDOWN_10UA 0x5: NO_PULL 0x6: RESERVED6 0x7: RESERVED7

0x0000C243 GPIO3_DIG_IN_CTL

Type: RW
Clock: PBUS_WRCLK
Reset State: 0x00
Reset Name: PERPH_RB

Enable DTEST buffers

GPIO3_DIG_IN_CTL

Bits	Name	Description
3	DTEST4	Route to DTEST4 0x0: DTEST_DISABLED 0x1: DTEST_ENABLED
2	DTEST3	Route to DTEST3 0x0: DTEST_DISABLED 0x1: DTEST_ENABLED
1	DTEST2	Route to DTEST2 0x0: DTEST_DISABLED 0x1: DTEST_ENABLED
0	DTEST1	Route to DTEST1 0x0: DTEST_DISABLED 0x1: DTEST_ENABLED

0x0000C245 GPIO3_DIG_OUT_CTL

Type: RW
Clock: PBUS_WRCLK
Reset State: 0x01
Reset Name: PERPH_RB

GPIO3_DIG_OUT_CTL

Bits	Name	Description
5:4	OUTPUT_TYPE	Output buffer configuration 10= open drain PMOS (only drive high) 01=open drain NMOS (only drive low, i.e. I2C) 00=CMOS (drive high and low) Open drain not supported in GPIOC flavor 0x0: CMOS 0x1: OPEN_HIGH 0x2: OPEN_LOW
1:0	OUTPUT_DRV_SEL	Output buffer drive strength: 0x0: RESERVED 0x1: LOW 0x2: MED 0x3: HIGH

0x0000C246 GPIO3_EN_CTL

Type: RW
Clock: PBUS_WRCLK
Reset State: 0x80
Reset Name: PERPH_RB

GPIO3_EN_CTL

Bits	Name	Description
7	PERPH_EN	GPIO Master Enable 0 = puts GPIO_PAD at high Z and disables the block 1 = GPIO is enabled 0x0: GPIO_DISABLED 0x1: GPIO_ENABLED

40 GPIO4

0x0000C300 - RESERVED
0x0000C303

0x0000C304 GPIO4_PERPH_TYPE

Type: R
Clock: PBUS_WRCLK
Reset State: 0x10
Reset Name: N/A

Peripheral Type

PMIC_CONSTANT

GPIO4_PERPH_TYPE

Bits	Name	Description
7:0	TYPE	0x10: GPIO

0x0000C305 GPIO4_PERPH_SUBTYPE

Type: R
Clock: PBUS_WRCLK
Reset State: 0x01
Reset Name: N/A

Peripheral SubType

GPIO4_PERPH_SUBTYPE

Bits	Name	Description
7:0	SUBTYPE	0x1: GPIO_4CH 0x5: GPIOC_4CH 0x9: GPIO_8CH 0xD: GPIOC_8CH

0x0000C308 GPIO4_STATUS1

Type: R
Clock: PBUS_WRCLK
Reset State: 0x00000000
Reset Name: N/A

Status Registers

GPIO4_STATUS1

Bits	Name	Description
7	GPIO_OK	DEF: X 0x0: GPIO_DISABLED 0x1: GPIO_ENABLED
0	GPIO_VAL	DEF: X Value read by the input buffer, if enabled 0x0: GPIO_INPUT_LOW 0x1: GPIO_INPUT_HIGH

0x0000C310 GPIO4_INT_RT_STS

Type: R
Clock: PBUS_WRCLK
Reset State: 0x00
Reset Name: N/A

Interrupt Real Time Status Bits

GPIO4_INT_RT_STS

Bits	Name	Description
0	GPIO_IN_STS	0x0: INT_RT_STATUS_LOW 0x1: INT_RT_STATUS_HIGH

0x0000C311 GPIO4_INT_SET_TYPE

Type: RW
Clock: PBUS_WRCLK
Reset State: 0x00
Reset Name: PERPH_RB

0 = use level trigger interrupts, 1 = use edge trigger interrupts

GPIO4_INT_SET_TYPE

Bits	Name	Description
0	GPIO_IN_TYPE	0x0: LEVEL 0x1: EDGE

0x0000C312 GPIO4_INT_POLARITY_HIGH

Type: RW
Clock: PBUS_WRCLK
Reset State: 0x00
Reset Name: PERPH_RB

1= Interrupt will trigger on a level high (rising edge) event, 0 = level high triggering is disabled

GPIO4_INT_POLARITY_HIGH

Bits	Name	Description
0	GPIO_IN_HIGH	0x0: HIGH_TRIGGER_DISABLED 0x1: HIGH_TRIGGER_ENABLED

0x0000C313 GPIO4_INT_POLARITY_LOW

Type: RW
Clock: PBUS_WRCLK
Reset State: 0x00
Reset Name: PERPH_RB

1 = Interrupt will trigger on a level low (falling edge) event, 0 = level low triggering is disabled

GPIO4_INT_POLARITY_LOW

Bits	Name	Description
0	GPIO_IN_LOW	0x0: LOW_TRIGGER_DISABLED 0x1: LOW_TRIGGER_ENABLED

0x0000C314 GPIO4_INT_LATCHED_CLR

Type: W
Clock: PBUS_WRCLK
Reset State: 0x00
Reset Name: PERPH_RB

writing a 1 to this interrupt will rearm the interrupt when an interrupt is pending. It clears the internal sticky and sent bits

GPIO4_INT_LATCHED_CLR

Bits	Name	Description
0	GPIO_IN_LATCHED_CLR	

0x0000C315 GPIO4_INT_EN_SET

Type: RW
Clock: PBUS_WRCLK
Reset State: 0x00
Reset Name: PERPH_RB

writing 0 to this register has no effect. Writing a 1 will enable the corresponding interrupt. Reading this register will readback enable status

PMIC_SET_MASK

GPIO4_INT_EN_SET

Bits	Name	Description
0	GPIO_IN_EN_SET	0x0: INT_DISABLED 0x1: INT_ENABLED

0x0000C316 GPIO4_INT_EN_CLR

Type: RW
Clock: PBUS_WRCLK
Reset State: 0x00
Reset Name: PERPH_RB

writing 0 to this register has no effect. Writing a 1 will disable the corresponding interrupt. Reading this register will readback enable status

PMIC_CLR_MASK=INT_EN_SET

GPIO4_INT_EN_CLR

Bits	Name	Description
0	GPIO_IN_EN_CLR	0x0: INT_DISABLED 0x1: INT_ENABLED

0x0000C318 GPIO4_INT_LATCHED_STS

Type: R
Clock: PBUS_WRCLK
Reset State: 0x00
Reset Name: N/A

Debug: Latched (Sticky) Interrupt. 1 indicates that the interrupt has triggered. Once the latched bit is set it can only be cleared by writing the clear bit.

GPIO4_INT_LATCHED_STS

Bits	Name	Description
0	GPIO_IN_LATCHED_STS	0x0: NO_INT_LATCHED 0x1: INTERRUPT_LATCHED

0x0000C319 GPIO4_INT_PENDING_STS

Type: R
Clock: PBUS_WRCLK
Reset State: 0x00
Reset Name: N/A

Debug: Pending is set if interrupt has been sent but not cleared.

GPIO4_INT_PENDING_STS

Bits	Name	Description
0	GPIO_IN_PENDING_STS	0x0: NO_INT_PENDING 0x1: INTERRUPT_PENDING

0x0000C31A GPIO4_INT_MID_SEL

Type: RW
Clock: PBUS_WRCLK
Reset State: 0x00
Reset Name: PERPH_RB

Selects the MID that will receive the interrupt

GPIO4_INT_MID_SEL

Bits	Name	Description
1:0	INT_MID_SEL	0x0: MID0 0x1: MID1 0x2: MID2 0x3: MID3

0x0000C31B GPIO4_INT_PRIORITY

Type: RW
Clock: PBUS_WRCLK
Reset State: 0x00
Reset Name: PERPH_RB

SR=0 A=1

GPIO4_INT_PRIORITY

Bits	Name	Description
0	INT_PRIORITY	0x0: SR 0x1: A

0x0000C340 GPIO4_MODE_CTL

Type: RW
Clock: PBUS_WRCLK
Reset State: 0x00
Reset Name: PERPH_RB

GPIO Mode allows you to switch from one mode to another mode in a single register write.

GPIO4_MODE_CTL

Bits	Name	Description
6:4	MODE	GPIO Mode: 0x0: DIGITAL_INPUT 0x1: DIGITAL_OUTPUT 0x2: DIGITAL_IN_AND_OUT 0x3: RESERVED

GPIO4_MODE_CTL (cont.)

Bits	Name	Description
3:0	EN_AND_SOURCE_SEL	Output Source select: (Note: bit zero is effectively an invert bit (every odd entry is inverted) 0x0: LOW 0x1: HIGH 0x2: PAIRED_GPIO 0x3: NOT_PAIRED_GPIO 0x4: SPECIAL_FUNCTION1 0x5: NOT_SPECIAL_FUNCTION1 0x6: SPECIAL_FUNCTION2 0x7: NOT_SPECIAL_FUNCTION2 0x8: DTEST1 0x9: NOT_DTEST1 0xA: DTEST2 0xB: NOT_DTEST2 0xC: DTEST3 0xD: NOT_DTEST3 0xE: DTEST4 0xF: NOT_DTEST4

0x0000C341 GPIO4_DIG_VIN_CTL

Type: RW
Clock: PBUS_WRCLK
Reset State: 0x00
Reset Name: PERPH_RB

GPIO4_DIG_VIN_CTL

Bits	Name	Description
2:0	VOLTAGE_SEL	Select Voltage source: 0x0: VIN0 0x1: VIN1 0x2: VIN2 0x3: VIN3 0x4: RESERVED4 0x5: RESERVED5 0x6: RESERVED6 0x7: RESERVED7

0x0000C342 GPIO4_DIG_PULL_CTL

Type: RW
Clock: PBUS_WRCLK
Reset State: 0x04
Reset Name: PERPH_RB

GPIO4_DIG_PULL_CTL

Bits	Name	Description
2:0	PULLUP_SEL	Current source pulls: (Note: HW disables pulls for modes other than input and open-drain output) 0x0: PULLUP_30UA 0x1: PULLUP_1P5UA 0x2: PULLUP_31P5UA 0x3: PULLUP_1P5UA_30UA_BOOST 0x4: PULLDOWN_10UA 0x5: NO_PULL 0x6: RESERVED6 0x7: RESERVED7

0x0000C343 GPIO4_DIG_IN_CTL

Type: RW
Clock: PBUS_WRCLK
Reset State: 0x00
Reset Name: PERPH_RB

Enable DTEST buffers

GPIO4_DIG_IN_CTL

Bits	Name	Description
3	DTEST4	Route to DTEST4 0x0: DTEST_DISABLED 0x1: DTEST_ENABLED
2	DTEST3	Route to DTEST3 0x0: DTEST_DISABLED 0x1: DTEST_ENABLED
1	DTEST2	Route to DTEST2 0x0: DTEST_DISABLED 0x1: DTEST_ENABLED
0	DTEST1	Route to DTEST1 0x0: DTEST_DISABLED 0x1: DTEST_ENABLED

0x0000C345 GPIO4_DIG_OUT_CTL

Type: RW
Clock: PBUS_WRCLK
Reset State: 0x01
Reset Name: PERPH_RB

GPIO4_DIG_OUT_CTL

Bits	Name	Description
5:4	OUTPUT_TYPE	Output buffer configuration 10= open drain PMOS (only drive high) 01=open drain NMOS (only drive low, i.e. I2C) 00=CMOS (drive high and low) Open drain not supported in GPIOC flavor 0x0: CMOS 0x1: OPEN_HIGH 0x2: OPEN_LOW
1:0	OUTPUT_DRV_SEL	Output buffer drive strength: 0x0: RESERVED 0x1: LOW 0x2: MED 0x3: HIGH

0x0000C346 GPIO4_EN_CTL

Type: RW
Clock: PBUS_WRCLK
Reset State: 0x80
Reset Name: PERPH_RB

GPIO4_EN_CTL

Bits	Name	Description
7	PERPH_EN	GPIO Master Enable 0 = puts GPIO_PAD at high Z and disables the block 1 = GPIO is enabled 0x0: GPIO_DISABLED 0x1: GPIO_ENABLED

41 BCLK_GEN_MAIN

0x00011000 - 0x00011003 RESERVED

0x00011004 BCLK_GEN_MAIN_PERPH_TYPE

Type: R
Clock: PBUS_WRCLK
Reset State: 0x1D
Reset Name: N/A

Peripheral Type

BCLK_GEN_MAIN_PERPH_TYPE

Bits	Name	Description
7:0	TYPE	BCLK GEN

0x00011005 BCLK_GEN_MAIN_PERPH_SUBTYPE

Type: R
Clock: PBUS_WRCLK
Reset State: 0x08
Reset Name: N/A

Peripheral SubType

BCLK_GEN_MAIN_PERPH_SUBTYPE

Bits	Name	Description
7:0	SUBTYPE	BCLK GEN MAIN

0x00011051 BCLK_GEN_MAIN_QM_MODE

Type: RW
Clock: PBUS_WRCLK
Reset State: 0x00
Reset Name: PERPH_RB

BCLK_GEN_MAIN_QM_MODE

Bits	Name	Description
7	QM_EN	Quiet Mode Enable 0=Quiet Mode Disable 1=All bucks go quiet (Individual bucks will go into quiet mode when their FOLLOW_QM bit is setup to 1) 0x0: QUIET_MODE_DISABLED 0x0: QUIET_MODE_DISABLED 0x1: QUIET_MODE_ENABLED 0x1: QUIET_MODE_ENABLED

42 S1_CTRL

0x00011400 - 0x00011403 RESERVED

0x00011408 S1_CTRL_STATUS

Type: R
Clock: PBUS_WRCLK
Reset State: 0x00000000
Reset Name: N/A

Status Registers

S1_CTRL_STATUS

Bits	Name	Description
7	VREG_OK	DEF: X 0 = VREG output voltage is below VREG_OK threshold, 1 = VREG output voltage is above VREG_OK threshold 0x0: VREG_OK_FALSE 0x1: VREG_OK_TRUE
2	PS_TRUE	DEF: X 0 = buck is not pulse skipping, 1 = buck is pulse skipping 0x0: PS_FALSE 0x1: PS_TRUE
1	NPM_TRUE	DEF: X 1 = VREG_OK and BUCK is in NPM 0x0: NPM_VREGOK_FALSE 0x1: NPM_VREGOK_TRUE
0	STEPPER_DONE	DEF: X 1 = stepper is done 0x0: STEPPER_DONE_FALSE 0x1: STEPPER_DONE_TRUE

0x00011410 S1_CTRL_INT_RT_STS

Type: R
Clock: PBUS_WRCLK
Reset State: 0x00
Reset Name: PERPH_RB

Interrupt Real Time Status Bits

S1_CTRL_INT_RT_STS

Bits	Name	Description
0	VREG_OK_INT	Regulator has been successfully enabled 0x0: VREG_OK_INT_FALSE 0x1: VREG_OK_INT_TRUE

0x00011411 S1_CTRL_INT_SET_TYPE

Type: R
Clock: PBUS_WRCLK
Reset State: 0x00
Reset Name: n/a

0 = use level trigger interrupts, 1 = use edge trigger interrupts

S1_CTRL_INT_SET_TYPE

Bits	Name	Description
0	VREG_OK_INT	0x0: VREG_OK_INT_FALSE 0x1: VREG_OK_INT_TRUE

0x00011412 S1_CTRL_INT_POLARITY_HIGH

Type: RW
Clock: PBUS_WRCLK
Reset State: 0x00
Reset Name: PERPH_RB

1= Interrupt will trigger on a level high (rising edge) event, 0 = level high triggering is disabled

S1_CTRL_INT_POLARITY_HIGH

Bits	Name	Description
0	VREG_OK_INT	0x0: VREG_OK_INT_FALSE 0x1: VREG_OK_INT_TRUE

0x00011413 S1_CTRL_INT_POLARITY_LOW

Type: R
Clock: PBUS_WRCLK
Reset State: 0x00
Reset Name: n/a

1' = Interrupt will trigger on a level low (falling edge) event, '0' = level low triggering is disabled

S1_CTRL_INT_POLARITY_LOW

Bits	Name	Description
0	VREG_OK_INT	0x0: VREG_OK_INT_FALSE 0x1: VREG_OK_INT_TRUE

0x00011414 S1_CTRL_INT_LATCHED_CLR

Type: W
Clock: PBUS_WRCLK
Reset State: 0x00
Reset Name: PERPH_RB

writing a '1' to this interrupt will rearm the interrupt when an interrupt is pending. It clears the internal sticky and sent bits

S1_CTRL_INT_LATCHED_CLR

Bits	Name	Description
0	VREG_OK_INT	0x0: VREG_OK_INT_FALSE 0x1: VREG_OK_INT_TRUE

0x00011415 S1_CTRL_INT_EN_SET

Type: RW
Clock: PBUS_WRCLK
Reset State: 0x00
Reset Name: PERPH_RB

writing '0' to this register has no effect. Writing a '1' will enable the corresponding interrupt. Reading this register will readback enable status

PMIC_SET_MASK

S1_CTRL_INT_EN_SET

Bits	Name	Description
0	VREG_OK_INT	0x0: VREG_OK_INT_FALSE 0x1: VREG_OK_INT_TRUE

0x00011416 S1_CTRL_INT_EN_CLR

Type: RW
Clock: PBUS_WRCLK
Reset State: 0x00
Reset Name: PERPH_RB

writing '0' to this register has no effect. Writing a '1' will disable the corresponding interrupt. Reading this register will readback enable status

PMIC_CLR_MASK=INT_EN_SET

S1_CTRL_INT_EN_CLR

Bits	Name	Description
0	VREG_OK_INT	0x0: VREG_OK_INT_FALSE 0x1: VREG_OK_INT_TRUE

0x00011418 S1_CTRL_INT_LATCHED_STS

Type: R
Clock: PBUS_WRCLK
Reset State: 0x00
Reset Name: PERPH_RB

Debug: Latched (Sticky) Interrupt. '1' indicates that the interrupt has triggered. Once the latched bit is set it can only be cleared by writing the clear bit.

S1_CTRL_INT_LATCHED_STS

Bits	Name	Description
0	VREG_OK_INT	0x0: VREG_OK_INT_FALSE 0x1: VREG_OK_INT_TRUE

0x00011419 S1_CTRL_INT_PENDING_STS

Type: R
Clock: PBUS_WRCLK
Reset State: 0x00
Reset Name: PERPH_RB

Debug: Pending is set if interrupt has been sent but not cleared.

S1_CTRL_INT_PENDING_STS

Bits	Name	Description
0	VREG_OK_INT	0x0: VREG_OK_INT_FALSE 0x1: VREG_OK_INT_TRUE

0x0001141A S1_CTRL_INT_MID_SEL

Type: RW
Clock: PBUS_WRCLK
Reset State: 0x00
Reset Name: PERPH_RB

Selects the MID that will receive the interrupt

S1_CTRL_INT_MID_SEL

Bits	Name	Description
1:0	INT_MID_SEL	0x0: INT_MID_FALSE 0x1: INT_MID_TRUE

0x0001141B S1_CTRL_INT_PRIORITY

Type: RW
Clock: PBUS_WRCLK
Reset State: 0x00
Reset Name: PERPH_RB

S1_CTRL_INT_PRIORITY

Bits	Name	Description
0	INT_PRIORITY	SR=0 A=1 0x0: INT_PRIORITY_FALSE 0x1: INT_PRIORITY_TRUE

0x00011441 S1_CTRL_VOLTAGE_CTL2

Type: RW
Clock: PBUS_WRCLK
Reset State: 0x3E
Reset Name: PERPH_RB

S1_CTRL_VOLTAGE_CTL2

Bits	Name	Description
6:0	V_SET	For subtype 0D: Vout (mV) = 375 + Vset*12.5 for (0000000~1011111, 7 bit); Vout (mV) = 750 + Vset*25 for (1100000~1111111, last 5 bit); For subtype 10: Vout (mV) = 1550 + Vset*25 for (000000~111111, 6bit), the MSB is ignored.

0x00011444 S1_CTRL_PFM_CTL

Type: RW
Clock: PBUS_WRCLK
Reset State: 0x81
Reset Name: PERPH_RB

S1_CTRL_PFM_CTL

Bits	Name	Description
7	PFM_VOLT_CTL	1=PFM voltage 1% over PWM voltage; 0=PFM voltage same as PWM voltage 0x0: PFM_VOLT_BOOST_OFF 0x1: PFM_VOLT_BOOST_ON
6	PFM_IBOOST	1=Boost PFM Comparator bias current to 2uA; 0=bias current is 0.5uA 0x0: PFM_IBOOST_FALSE 0x1: PFM_IBOOST_TRUE
5	PFM_TYPE_I	1= Legacy PFM mode (not supported) 0=Advanced PFM mode 0x0: PFM_ADVANCED 0x1: PFM_LEGACY
4	PFM_COMP_HYST	0=2mV, 1=4mV 0x0: PFM_HYST_2MV 0x1: PFM_HYST_4MV
3	PFM_COMP_PLS_FLTR	0=100ns,,,, 1=250ns 0x0: PFM_COMP_PLS_FLTR_100NS 0x1: PFM_COMP_PLS_FLTR_250NS

S1_CTRL_PFM_CTL (cont.)

Bits	Name	Description
1:0	PFM_IPLIM_DLY	00:Delay=75ns 01:Delay=150ns 10:Delay=300ns 11:Delay=600ns 0x0: PFM_IPLIM_CTRL_75NS 0x1: PFM_IPLIMI_CTRL_150NS 0x2: PFM_IPLIM_CTRL_300NS 0x3: PFM_IPLIM_CTRL_600NS

0x00011445 S1_CTRL_MODE_CTL

Type: RW
Clock: PBUS_WRCLK
Reset State: 0x80
Reset Name: PERPH_RB

Define Buck Mode Transitions

S1_CTRL_MODE_CTL

Bits	Name	Description
7	PWM	Force PWM 0x0: PWM_NO_FORCE 0x1: PWM_FORCE
4	FOLLOW_PMIC_AWAKE	NPM when PMIC_AWAKE (SLEEP_B) = '1' 0x0: FOLLOW_PMIC_AWAKE_FALSE 0x1: FOLLOW_PMIC_AWAKE_TRUE

0x00011446 S1_CTRL_EN_CTL

Type: RW
Clock: PBUS_WRCLK
Reset State: 0x00
Reset Name: PERPH_RB

S1_CTRL_EN_CTL

Bits	Name	Description
7	PERPH_EN	1' = Enable the BUCK, '0' = do not force BUCK on 0x0: BUCK_ENABLE_FALSE 0x1: BUCK_ENABLE_TRUE

0x00011448 S1_CTRL_PD_CTL

Type: RW
Clock: PBUS_WRCLK
Reset State: 0x80
Reset Name: PERPH_RB

S1_CTRL_PD_CTL

Bits	Name	Description
7	PD_EN	1' = Enable the pulldown when the regulator is disabled, '0' = pulldown is always disabled. Preset by trim register CTL_TRIM4 0x0: PD_ENABLE_FALSE 0x1: PD_ENABLE_TRUE

0x00011459 S1_CTRL_PULSE_SKIP_CTL

Type: RW
Clock: PBUS_WRCLK
Reset State: 0x84
Reset Name: PERPH_RB

S1_CTRL_PULSE_SKIP_CTL

Bits	Name	Description
7	PS_EN	Pulse skipping control: 0 = pulse skipping disable 1 = pulse skipping enable 0x0: PS_EN_FALSE 0x1: PS_EN_TRUE
3:2	PS_TIME_HYST	Timing hysteresis for entering pulse-skipping 00 = 2 cycle 01 = 4 cycle 10 = 8 cycle 11 = 16 cycle 0x0: PS_TIME_HYST_2CYCLE 0x1: PS_TIME_HYST_4CYCLE 0x2: PS_TIME_HYST_8CYCLE 0x3: PS_TIME_HYST_16CYLE

0x0001145A S1_CTRL_PULSE_SKIP_THRES

Type: RW
Clock: PBUS_WRCLK
Reset State: 0x36
Reset Name: PERPH_RB

S1_CTRL_PULSE_SKIP_THRES

Bits	Name	Description
6:3	PS_VRST	0000:150mV 0001:200mV 0010:250mV 0011:275mV 0100:300mV 0101:325mV 0110:350mV 0111:375mV 1000:400mV 1001:450mV 1010:500mV 1011:550mV 1100:600mV 1101:700mV 1110:800mV 1111:850mV 0x0: PS_VRST_150MV 0x1: PS_VRST_200MV 0x2: PS_VRST_250MV 0x3: PS_VRST_275MV 0x4: PS_VRST_300MV 0x5: PS_VRST_325MV 0x6: PS_VRST_350MV 0x7: PS_VRST_375MV 0x8: PS_VRST_400MV 0x9: PS_VRST_450MV 0xA: PS_VRST_500MV 0xB: PS_VRST_550MV 0xC: PS_VRST_600M0xD: PS_VRST_700MV 0xE: PS_VRST_800MV 0xF: PS_VRST_850MV
2:0	PS_VSET	VR_SET=(450+m*25)mV or I_LOAD_THRES=(25+m*12.5)mA when m is not 0; VR_SET=VRST when m=0 0x0: PS_VSET_VRSET_VRST 0x1: PS_VSET_VRSET_475MV 0x2: PS_VSET_VRSET_500MV 0x3: PS_VSET_VRSET_525MV 0x4: PS_VSET_VRSET_550MV 0x5: PS_VSET_VRSET_575MV 0x6: PS_VSET_VRSET_600MV 0x7: PS_VSET_VRSET_625MV

0x00011460 S1_CTRL_STEPPER_SS_CTL

Type: RW
Clock: PBUS_WRCLK
Reset State: 0x85
Reset Name: PERPH_RB

S1_CTRL_STEPPER_SS_CTL

Bits	Name	Description
7	STEPPER_EN	Enable soft start voltage stepper (Note 5,6) 0 = voltage stepper is disabled 1 = voltage stepper is enabled 1 = enable 0x0: STEPPER_EN_FALSE 0x1: STEPPER_EN_TRUE
2:0	DELAY	Softstart delay between steps @19.2 MHz, where m = <2:0> (Fsys = 19.2 MHz): 000 = 20-clock cycles 001 = 40-clock cycles 010 = 80-clock cycles 011 = 160-clock cycles 100 = 320-clock cycles 101 = 640-clock cycles 110 = 1280-clock cycles 111 = 2560-clock cycles 0x0: DELAY_20_CLK_CYCLES 0x1: DELAY_40_CLK_CYCLES 0x2: DELAY_80_CLK_CYCLES 0x3: DELAY_160_CLK_CYCLES 0x4: DELAY_320_CLK_CYCLES 0x5: DELAY_640_CLK_CYLES 0x6: DELAY_1280_CLK_CYCLES 0x7: DELAY_2560_CLK_CYCLES

0x00011461 S1_CTRL_STEPPER_VS_CTL

Type: RW
Clock: PBUS_WRCLK
Reset State: 0x85
Reset Name: PERPH_RB

S1_CTRL_STEPPER_VS_CTL

Bits	Name	Description
7	STEPPER_EN	Enable voltage stepper (Note 5,6) 0 = voltage stepper is disabled 1 = voltage stepper is enabled 1 = enable 0x0: STEPPER_EN_FALSE 0x1: STEPPER_EN_TRUE
2:0	DELAY	Softstart delay between steps @19.2 MHz, where m = <2:0> (Fsys = 19.2 MHz): 000 =20-clock cycles 001 = 40-clock cycles 010 = 80-clock cycles 011 = 160-clock cycles 100 = 320-clock cycles 101 = 640-clock cycles 110 = 1280-clock cycles 111 = 2650-clock cycles 0x0: DELAY_20_CLK_CYCLES 0x1: DELAY_40_CLK_CYCLES 0x2: DELAY_80_CLK_CYCLES 0x3: DELAY_160_CLK_CYCLES 0x4: DELAY_320_CLK_CYCLES 0x5: DELAY_640_CLK_CYLES 0x6: DELAY_1280_CLK_CYCLES 0x7: DELAY_2560_CLK_CYCLES

0x00011462 S1_CTRL_FT_CTL

Type: RW
Clock: PBUS_WRCLK
Reset State: 0x00
Reset Name: PERPH_RB

S1_CTRL_FT_CTL

Bits	Name	Description
7	FT_EN	Enable fast transient mode (EN_FT) 0 = fast transient mode is disabled 1 = fast transient mode is enabled 0x0: FT_EN_FALSE 0x1: FT_EN_TRUE

S1_CTRL_FT_CTL (cont.)

Bits	Name	Description
6	GM_BOOST	Boost the main error amplifier Gm by 3X 0 = Error amp gm is given by test register bank1 bits<3:0> 1 = Error amp gm is three times the value in test register bank1 bits<3:0> 0x0: GM_BOOST_FALSE 0x1: GM_BOOST_TRUE
5:3	NL_DEAD_ZONE	Non-linear dead-zone offset (Ios) Ios = m * 0.125 A Where m is the 3-bit register value <5:3> 0x0: NL_DEAD_ZONE_0A 0x1: NL_DEAD_ZONE_0P125A 0x2: NL_DEAD_ZONE_0P25A 0x3: NL_DEAD_ZONE_0P375A 0x4: NL_DEAD_ZONE_0P5A 0x5: NL_DEAD_ZONE_0P625A 0x6: NL_DEAD_ZONE_0P75A 0x7: NL_DEAD_ZONE_0P875A
2:0	NL_CUR_CTL	Non-linear curvature control (non-linear gain control) I_effective = K * Y where K is non-linear gain control Y is a second-order function of Iout of the original error amplifier Ios = m * 0.125 ?A Where m is the 3-bit register value <2:0> 0x0: NL_CUR_CTL_0A 0x1: NL_CUR_CTL_0P125A 0x2: NL_CUR_CTL_0P25A 0x3: NL_CUR_CTL_0P375A 0x4: NL_CUR_CTL_0P5A 0x5: NL_CUR_CTL_0P625A 0x6: NL_CUR_CTL_0P75A 0x7: NL_CUR_CTL_0P875A

0x0001146C S1_CTRL_OCP

Type: RW
Clock: PBUS_WRCLK
Reset State: 0x80
Reset Name: PERPH_RB

S1_CTRL_OCP

Bits	Name	Description
7	ENABLE	1=OCP ENABLE, 0=OCP DISABLE 0x1: OCP_TRUE 0x0: OCP_FALSE

S1_CTRL_OCP (cont.)

Bits	Name	Description
6	OVER_RIDE	0=Normal Operation, 1= Test mode : don't reset the buck but OCP event is triggered 0x1: OCP_TEST_MODE_TRUE 0x0: OCP_TEST_MODE_FALSE
5	CLK_DIV	0=No clock division, 1= divide startup clock by 2 0x1: OCP_STARTUP_CLK_DIV_BY_2_TRUE 0x0: OCP_STARTUP_CLK_DIV_BY_2_FALSE
4	LPM	0=Normal Operation. 1=Low power operation during PFM mode 0x1: OCP_LPM_DURING_PFM_TRUE 0x0: OCP_LPM_DURING_PFM_FALSE
3	IPLIMIT_COUNT	0=count 4 iplimit pulses, 1=count 8 iplimit pulses 0x0: OCP_IPLIMT_COUNT_4 0x1: OCP_IPLIMIT_COUNT_8

43 S1 Power Stage

0x00011500 - 0x00011503 RESERVED

0x00011510 S1_PS_INT_RT_STS

Type: R
Clock: PBUS_WRCLK
Reset State: 0x00
Reset Name: PERPH_RB

Interrupt Real Time Status Bits

S1_PS_INT_RT_STS

Bits	Name	Description
1	HIGH_CURRENT_INT2	Buck current exceeds set level 2 0x0: HIGH_CURRENT_INT2_FALSE 0x0: HIGH_CURRENT_INT2_FALSE 0x1: HIGH_CURRENT_INT2_TRUE 0x1: HIGH_CURRENT_INT2_TRUE
0	HIGH_CURRENT_INT1	Buck current exceeds set level 1 0x0: HIGH_CURRENT_INT1_FALSE 0x0: HIGH_CURRENT_INT1_FALSE 0x1: HIGH_CURRENT_INT1_TRUE 0x1: HIGH_CURRENT_INT1_TRUE

0x00011511 S1_PS_INT_SET_TYPE

Type: RW
Clock: PBUS_WRCLK
Reset State: 0x00
Reset Name: PERPH_RB

0 = use level trigger interrupts, 1 = use edge trigger interrupts

S1_PS_INT_SET_TYPE

Bits	Name	Description
1	HIGH_CURRENT_INT2	0x0: HIGH_CURRENT_INT2_FALSE 0x1: HIGH_CURRENT_INT2_TRUE
0	HIGH_CURRENT_INT1	0x0: HIGH_CURRENT_INT1_FALSE 0x1: HIGH_CURRENT_INT1_TRUE

0x00011512 S1_PS_INT_POLARITY_HIGH

Type: RW
Clock: PBUS_WRCLK
Reset State: 0x00
Reset Name: PERPH_RB

1= Interrupt will trigger on a level high (rising edge) event, 0 = level high triggering is disabled

S1_PS_INT_POLARITY_HIGH

Bits	Name	Description
1	HIGH_CURRENT_INT2	0x0: HIGH_CURRENT_INT2_FALSE 0x1: HIGH_CURRENT_INT2_TRUE
0	HIGH_CURRENT_INT1	0x0: HIGH_CURRENT_INT1_FALSE 0x1: HIGH_CURRENT_INT1_TRUE

0x00011513 S1_PS_INT_POLARITY_LOW

Type: RW
Clock: PBUS_WRCLK
Reset State: 0x00
Reset Name: PERPH_RB

1' = Interrupt will trigger on a level low (falling edge) event, '0' = level low triggering is disabled

S1_PS_INT_POLARITY_LOW

Bits	Name	Description
1	HIGH_CURRENT_INT2	0x0: HIGH_CURRENT_INT2_FALSE 0x1: HIGH_CURRENT_INT2_TRUE
0	HIGH_CURRENT_INT1	0x0: HIGH_CURRENT_INT1_FALSE 0x1: HIGH_CURRENT_INT1_TRUE

0x00011514 S1_PS_INT_LATCHED_CLR

Type: W
Clock: PBUS_WRCLK
Reset State: 0x00
Reset Name: PERPH_RB

writing a '1' to this interrupt will rearm the interrupt when an interrupt is pending. It clears the internal sticky and sent bits

S1_PS_INT_LATCHED_CLR

Bits	Name	Description
1	HIGH_CURRENT_INT2	0x0: HIGH_CURRENT_INT2_FALSE 0x1: HIGH_CURRENT_INT2_TRUE
0	HIGH_CURRENT_INT1	0x0: HIGH_CURRENT_INT1_FALSE 0x1: HIGH_CURRENT_INT1_TRUE

0x00011515 S1_PS_INT_EN_SET

Type: RW
Clock: PBUS_WRCLK
Reset State: 0x00
Reset Name: PERPH_RB

writing '0' to this register has no effect. Writing a '1' will enable the corresponding interrupt. Reading this register will readback enable status

PMIC_SET_MASK

S1_PS_INT_EN_SET

Bits	Name	Description
1	HIGH_CURRENT_INT2	0x0: HIGH_CURRENT_INT2_FALSE 0x1: HIGH_CURRENT_INT2_TRUE
0	HIGH_CURRENT_INT1	0x0: HIGH_CURRENT_INT1_FALSE 0x1: HIGH_CURRENT_INT1_TRUE

0x00011516 S1_PS_INT_EN_CLR

Type: RW
Clock: PBUS_WRCLK
Reset State: 0x00
Reset Name: PERPH_RB

writing '0' to this register has no effect. Writing a '1' will disable the corresponding interrupt. Reading this register will readback enable status

PMIC_CLR_MASK=INT_EN_SET

S1_PS_INT_EN_CLR

Bits	Name	Description
1	HIGH_CURRENT_INT2	0x0: HIGH_CURRENT_INT2_FALSE 0x1: HIGH_CURRENT_INT2_TRUE
0	HIGH_CURRENT_INT1	0x0: HIGH_CURRENT_INT1_FALSE 0x1: HIGH_CURRENT_INT1_TRUE

0x00011518 S1_PS_INT_LATCHED_STS

Type: R
Clock: PBUS_WRCLK
Reset State: 0x00
Reset Name: PERPH_RB

Debug: Latched (Sticky) Interrupt. '1' indicates that the interrupt has triggered. Once the latched bit is set it can only be cleared by writing the clear bit.

S1_PS_INT_LATCHED_STS

Bits	Name	Description
1	HIGH_CURRENT_INT2	0x0: HIGH_CURRENT_INT2_FALSE 0x1: HIGH_CURRENT_INT2_TRUE
0	HIGH_CURRENT_INT1	0x0: HIGH_CURRENT_INT1_FALSE 0x1: HIGH_CURRENT_INT1_TRUE

0x00011519 S1_PS_INT_PENDING_STS

Type: R
Clock: PBUS_WRCLK
Reset State: 0x00
Reset Name: PERPH_RB

Debug: Pending is set if interrupt has been sent but not cleared.

S1_PS_INT_PENDING_STS

Bits	Name	Description
1	HIGH_CURRENT_INT2	0x0: HIGH_CURRENT_INT2_FALSE 0x1: HIGH_CURRENT_INT2_TRUE
0	HIGH_CURRENT_INT1	0x0: HIGH_CURRENT_INT1_FALSE 0x1: HIGH_CURRENT_INT1_TRUE

0x0001151A S1_PS_INT_MID_SEL

Type: RW
Clock: PBUS_WRCLK
Reset State: 0x00
Reset Name: PERPH_RB

Selects the MID that will receive the interrupt

S1_PS_INT_MID_SEL

Bits	Name	Description
1:0	INT_MID_SEL	0x0: INT_MID_FALSE 0x1: INT_MID_TRUE

0x0001151B S1_PS_INT_PRIORITY

Type: RW
Clock: PBUS_WRCLK
Reset State: 0x00
Reset Name: PERPH_RB

S1_PS_INT_PRIORITY

Bits	Name	Description
0	INT_PRIORITY	SR=0 A=1 0x0: INT_PRIORITY_FALSE 0x1: INT_PRIORITY_TRUE

0x0001154A S1_PS_PWM_CURRENT_LIM_CTL

Type: RW
Clock: PBUS_WRCLK
Reset State: 0x84
Reset Name: PERPH_RB

S1_PS_PWM_CURRENT_LIM_CTL

Bits	Name	Description
7	CURRENT_LIM_EN	0 = disable 1 = enable 0x0: CURRENT_LIM_EN_FALSE 0x1: CURRENT_LIM_EN_TRUE

S1_PS_PWM_CURRENT_LIM_CTL (cont.)

Bits	Name	Description
2:0	CURRENT_LIM_PWM_SEL	Iplimit_sel<2:0> for current limit threshold programming when operating in PWM mode. Iplimit threshold depends on selected current rating of the power stage S1/S2 --> Iplimit = 4400 mA - m*530 mA S3/S4 --> Iplimit = 2700 mA - m*320 mA where m is the bit value of iplimit_sel<2:0> Note: The preset value of these bits is set to around 1A. The final values are device specific and listed in the device SBI table. 0x0: CURRENT_LIM_PWM_SEL_S3_S4_2700MA_S1_S2_4400MA 0x0: CURRENT_LIM_PWM_SEL_S3_S4_2700MA_S1_S2_4400MA 0x1: CURRENT_LIM_PWM_SEL_S3_S4_2380MA_S1_S2_3870MA 0x2: CURRENT_LIM_PWM_SEL_S3_S4_2060MA_S1_S2_3340MA 0x3: CURRENT_LIM_PWM_SEL_S3_S4_1740MA_S1_S2_2810MA 0x4: CURRENT_LIM_PWM_SEL_S3_S4_1420MA_S1_S2_2280MA 0x5: CURRENT_LIM_PWM_SEL_S3_S4_1100MA_S1_S2_1750MA 0x6: CURRENT_LIM_PWM_SEL_S3_S4_780MA_S1_S2_1220MA 0x7: CURRENT_LIM_PWM_SEL_S3_S4_460MA_S1_S2_690MA

0x0001154B S1_PS_PFM_CURRENT_LIM_CTL

Type: RW
Clock: PBUS_WRCLK
Reset State: 0x84
Reset Name: PERPH_RB

S1_PS_PFM_CURRENT_LIM_CTL

Bits	Name	Description
7	CURRENT_LIM_EN	0 = disable 1 = enable 0x0: CURRENT_LIM_EN_FALSE 0x1: CURRENT_LIM_EN_TRUE

S1_PS_PFM_CURRENT_LIM_CTL (cont.)

Bits	Name	Description
2:0	CURRENT_LIM_SEL	Iplimit_sel<2:0> for current limit threshold programming when operating in PFM mode. Iplimit = 800 mA - m * 100 mA where m is the bit value of iplimit_sel<2:0> Note: The preset value and the final values of these bits are device specific and listed in the device SBI table. 0x0: CURRENT_LIM_SEL_800MA 0x1: CURRENT_LIM_SEL_700MA 0x2: CURRENT_LIM_SEL_600MA 0x3: CURRENT_LIM_SEL_500MA 0x4: CURRENT_LIM_SEL_400MA 0x5: CURRENT_LIM_SEL_300MA 0x6: CURRENT_LIM_SEL_200MA 0x7: CURRENT_LIM_SEL_100MA

0x00011580 S1_PS_HCINT_EN

Type: RW
Clock: PBUS_WRCLK
Reset State: 0x00
Reset Name: PERPH_RB

S1_PS_HCINT_EN

Bits	Name	Description
7	HCINT_EN	0 = INT disable 1 = INT enable 0x0: INT_DISABLE 0x1: INT_ENABLE

0x00011581 S1_PS_HCINT_CONTROL

Type: RW
Clock: PBUS_WRCLK
Reset State: 0x00
Reset Name: PERPH_RB

S1_PS_HCINT_CONTROL

Bits	Name	Description
5	SET_WINDOW_WIDTH	0 = count 4 to set 1 = count 8 to set 0x0: COUNT4 0x1: COUNT8

S1_PS_HCINT_CONTROL (cont.)

Bits	Name	Description
4	RESET_WINDOW_WIDTH	0 = count 4 to reset 1 = count 8 to reset 0x0: COUNT4RESET 0x1: COUNT8RESET
3:2	INT2_CUR_THRESHOLD	rated current - 10%*(m+1) 0x0: RATED_CURRENT_90PCT 0x1: RATED_CURRENT_80PCT 0x2: RATED_CURRENT_70PCT 0x3: RATED_CURRENT_60PCT
1:0	INT1_CUR_THRESHOLD	rated current - 10%*(m+3) 0x0: RATED_CURRENT_70PCT 0x1: RATED_CURRENT_60PCT 0x2: RATED_CURRENT_50PCT 0x3: RATED_CURRENT_40PCT

44 S2_CTRL

0x00011700 - 0x00011703 RESERVED

0x00011708 S2_CTRL_STATUS

Type: R
Clock: PBUS_WRCLK
Reset State: 0x00000000
Reset Name: N/A

Status Registers

S2_CTRL_STATUS

Bits	Name	Description
7	VREG_OK	DEF: X 0 = VREG output voltage is below VREG_OK threshold, 1 = VREG output voltage is above VREG_OK threshold 0x0: VREG_OK_FALSE 0x1: VREG_OK_TRUE
2	PS_TRUE	DEF: X 0 = buck is not pulse skipping, 1 = buck is pulse skipping 0x0: PS_FALSE 0x1: PS_TRUE
1	NPM_TRUE	DEF: X 1 = VREG_OK and BUCK is in NPM 0x0: NPM_VREGOK_FALSE 0x1: NPM_VREGOK_TRUE
0	STEPPER_DONE	DEF: X 1 = stepper is done 0x0: STEPPER_DONE_FALSE 0x1: STEPPER_DONE_TRUE

0x00011710 S2_CTRL_INT_RT_STS

Type: R
Clock: PBUS_WRCLK
Reset State: 0x00
Reset Name: PERPH_RB

Interrupt Real Time Status Bits

S2_CTRL_INT_RT_STS

Bits	Name	Description
0	VREG_OK_INT	Regulator has been successfully enabled 0x0: VREG_OK_INT_FALSE 0x1: VREG_OK_INT_TRUE

0x00011711 S2_CTRL_INT_SET_TYPE

Type: R
Clock: PBUS_WRCLK
Reset State: 0x00
Reset Name: n/a

0 = use level trigger interrupts, 1 = use edge trigger interrupts

S2_CTRL_INT_SET_TYPE

Bits	Name	Description
0	VREG_OK_INT	0x0: VREG_OK_INT_FALSE 0x1: VREG_OK_INT_TRUE

0x00011712 S2_CTRL_INT_POLARITY_HIGH

Type: RW
Clock: PBUS_WRCLK
Reset State: 0x00
Reset Name: PERPH_RB

1= Interrupt will trigger on a level high (rising edge) event, 0 = level high triggering is disabled

S2_CTRL_INT_POLARITY_HIGH

Bits	Name	Description
0	VREG_OK_INT	0x0: VREG_OK_INT_FALSE 0x1: VREG_OK_INT_TRUE

0x00011713 S2_CTRL_INT_POLARITY_LOW

Type: R
Clock: PBUS_WRCLK
Reset State: 0x00
Reset Name: n/a

1' = Interrupt will trigger on a level low (falling edge) event, '0' = level low triggering is disabled

S2_CTRL_INT_POLARITY_LOW

Bits	Name	Description
0	VREG_OK_INT	0x0: VREG_OK_INT_FALSE 0x1: VREG_OK_INT_TRUE

0x00011714 S2_CTRL_INT_LATCHED_CLR

Type: W
Clock: PBUS_WRCLK
Reset State: 0x00
Reset Name: PERPH_RB

writing a '1' to this interrupt will rearm the interrupt when an interrupt is pending. It clears the internal sticky and sent bits

S2_CTRL_INT_LATCHED_CLR

Bits	Name	Description
0	VREG_OK_INT	0x0: VREG_OK_INT_FALSE 0x1: VREG_OK_INT_TRUE

0x00011715 S2_CTRL_INT_EN_SET

Type: RW
Clock: PBUS_WRCLK
Reset State: 0x00
Reset Name: PERPH_RB

writing '0' to this register has no effect. Writing a '1' will enable the corresponding interrupt. Reading this register will readback enable status

PMIC_SET_MASK

S2_CTRL_INT_EN_SET

Bits	Name	Description
0	VREG_OK_INT	0x0: VREG_OK_INT_FALSE 0x1: VREG_OK_INT_TRUE

0x00011716 S2_CTRL_INT_EN_CLR

Type: RW
Clock: PBUS_WRCLK
Reset State: 0x00
Reset Name: PERPH_RB

writing '0' to this register has no effect. Writing a '1' will disable the corresponding interrupt. Reading this register will readback enable status

PMIC_CLR_MASK=INT_EN_SET

S2_CTRL_INT_EN_CLR

Bits	Name	Description
0	VREG_OK_INT	0x0: VREG_OK_INT_FALSE 0x1: VREG_OK_INT_TRUE

0x00011718 S2_CTRL_INT_LATCHED_STS

Type: R
Clock: PBUS_WRCLK
Reset State: 0x00
Reset Name: PERPH_RB

Debug: Latched (Sticky) Interrupt. '1' indicates that the interrupt has triggered. Once the latched bit is set it can only be cleared by writing the clear bit.

S2_CTRL_INT_LATCHED_STS

Bits	Name	Description
0	VREG_OK_INT	0x0: VREG_OK_INT_FALSE 0x1: VREG_OK_INT_TRUE

0x00011719 S2_CTRL_INT_PENDING_STS

Type: R
Clock: PBUS_WRCLK
Reset State: 0x00
Reset Name: PERPH_RB

Debug: Pending is set if interrupt has been sent but not cleared.

S2_CTRL_INT_PENDING_STS

Bits	Name	Description
0	VREG_OK_INT	0x0: VREG_OK_INT_FALSE 0x1: VREG_OK_INT_TRUE

0x0001171A S2_CTRL_INT_MID_SEL

Type: RW
Clock: PBUS_WRCLK
Reset State: 0x00
Reset Name: PERPH_RB

Selects the MID that will receive the interrupt

S2_CTRL_INT_MID_SEL

Bits	Name	Description
1:0	INT_MID_SEL	0x0: INT_MID_FALSE 0x1: INT_MID_TRUE

0x0001171B S2_CTRL_INT_PRIORITY

Type: RW
Clock: PBUS_WRCLK
Reset State: 0x00
Reset Name: PERPH_RB

S2_CTRL_INT_PRIORITY

Bits	Name	Description
0	INT_PRIORITY	SR=0 A=1 0x0: INT_PRIORITY_FALSE 0x1: INT_PRIORITY_TRUE

0x00011741 S2_CTRL_VOLTAGE_CTL2

Type: RW
Clock: PBUS_WRCLK
Reset State: 0x3E
Reset Name: PERPH_RB

S2_CTRL_VOLTAGE_CTL2

Bits	Name	Description
6:0	V_SET	For subtype 0D: Vout (mV) = 375 + Vset*12.5 for (0000000~1011111, 7 bit); Vout (mV) = 750 + Vset*25 for (1100000~1111111, last 5 bit); For subtype 10: Vout (mV) = 1550 + Vset*25 for (000000~111111, 6bit), the MSB is ignored.

0x00011744 S2_CTRL_PFM_CTL

Type: RW
Clock: PBUS_WRCLK
Reset State: 0x81
Reset Name: PERPH_RB

S2_CTRL_PFM_CTL

Bits	Name	Description
7	PFM_VOLT_CTL	1=PFM voltage 1% over PWM voltage; 0=PFM voltage same as PWM voltage 0x0: PFM_VOLT_BOOST_OFF 0x1: PFM_VOLT_BOOST_ON
6	PFM_IBOOST	1=Boost PFM Comparator bias current to 2uA; 0=bias current is 0.5uA 0x0: PFM_IBOOST_FALSE 0x1: PFM_IBOOST_TRUE
5	PFM_TYPE_I	1= Legacy PFM mode (not supported) 0=Advanced PFM mode 0x0: PFM_ADVANCED 0x1: PFM_LEGACY
4	PFM_COMP_HYST	0=2mV, 1=4mV 0x0: PFM_HYST_2MV 0x1: PFM_HYST_4MV
3	PFM_COMP_PLS_FLTR	0=100ns,,,, 1=250ns 0x0: PFM_COMP_PLS_FLTR_100NS 0x1: PFM_COMP_PLS_FLTR_250NS

S2_CTRL_PFM_CTL (cont.)

Bits	Name	Description
1:0	PFM_IPLIM_DLY	00:Delay=75ns 01:Delay=150ns 10:Delay=300ns 11:Delay=600ns 0x0: PFM_IPLIM_CTRL_75NS 0x1: PFM_IPLIMI_CTRL_150NS 0x2: PFM_IPLIM_CTRL_300NS 0x3: PFM_IPLIM_CTRL_600NS

0x00011745 S2_CTRL_MODE_CTL

Type: RW
Clock: PBUS_WRCLK
Reset State: 0x80
Reset Name: PERPH_RB

Define Buck Mode Transitions

S2_CTRL_MODE_CTL

Bits	Name	Description
7	PWM	Force PWM 0x0: PWM_NO_FORCE 0x1: PWM_FORCE
4	FOLLOW_PMIC_AWAKE	NPM when PMIC_AWAKE (SLEEP_B) = '1' 0x0: FOLLOW_PMIC_AWAKE_FALSE 0x1: FOLLOW_PMIC_AWAKE_TRUE

0x00011746 S2_CTRL_EN_CTL

Type: RW
Clock: PBUS_WRCLK
Reset State: 0x00
Reset Name: PERPH_RB

S2_CTRL_EN_CTL

Bits	Name	Description
7	PERPH_EN	1' = Enable the BUCK, '0' = do not force BUCK on 0x0: BUCK_ENABLE_FALSE 0x1: BUCK_ENABLE_TRUE

0x00011748 S2_CTRL_PD_CTL

Type: RW
Clock: PBUS_WRCLK
Reset State: 0x80
Reset Name: PERPH_RB

S2_CTRL_PD_CTL

Bits	Name	Description
7	PD_EN	1' = Enable the pulldown when the regulator is disabled, '0' = pulldown is always disabled. Preset by trim register CTL_TRIM4 0x0: PD_ENABLE_FALSE 0x1: PD_ENABLE_TRUE

0x00011759 S2_CTRL_PULSE_SKIP_CTL

Type: RW
Clock: PBUS_WRCLK
Reset State: 0x84
Reset Name: PERPH_RB

S2_CTRL_PULSE_SKIP_CTL

Bits	Name	Description
7	PS_EN	Pulse skipping control: 0 = pulse skipping disable 1 = pulse skipping enable 0x0: PS_EN_FALSE 0x1: PS_EN_TRUE
3:2	PS_TIME_HYST	Timing hysteresis for entering pulse-skipping 00 = 2 cycle 01 = 4 cycle 10 = 8 cycle 11 = 16 cycle 0x0: PS_TIME_HYST_2CYCLE 0x1: PS_TIME_HYST_4CYCLE 0x2: PS_TIME_HYST_8CYCLE 0x3: PS_TIME_HYST_16CYLE

0x0001175A S2_CTRL_PULSE_SKIP_THRES

Type: RW
Clock: PBUS_WRCLK
Reset State: 0x36
Reset Name: PERPH_RB

S2_CTRL_PULSE_SKIP_THRES

Bits	Name	Description
6:3	PS_VRST	0000:150mV 0001:200mV 0010:250mV 0011:275mV 0100:300mV 0101:325mV 0110:350mV 0111:375mV 1000:400mV 1001:450mV 1010:500mV 1011:550mV 1100:600mV 1101:700mV 1110:800mV 1111:850mV 0x0: PS_VRST_150MV 0x1: PS_VRST_200MV 0x2: PS_VRST_250MV 0x3: PS_VRST_275MV 0x4: PS_VRST_300MV 0x5: PS_VRST_325MV 0x6: PS_VRST_350MV 0x6: PS_VRST_350MV 0x7: PS_VRST_375MV 0x8: PS_VRST_400MV 0x9: PS_VRST_450MV 0xA: PS_VRST_500MV 0xB: PS_VRST_550MV 0xC: PS_VRST_600MV 0xD: PS_VRST_700MV 0xE: PS_VRST_800MV 0xF: PS_VRST_850MV
2:0	PS_VSET	VR_SET=(450+m*25)mV or I_LOAD_THRES=(25+m*12.5)mA when m is not 0; VR_SET=VRST when m=0 0x0: PS_VSET_VRSET_VRST 0x1: PS_VSET_VRSET_475MV 0x2: PS_VSET_VRSET_500MV 0x3: PS_VSET_VRSET_525MV 0x4: PS_VSET_VRSET_550MV 0x5: PS_VSET_VRSET_575MV 0x6: PS_VSET_VRSET_600MV 0x7: PS_VSET_VRSET_625MV

0x00011760 S2_CTRL_STEPPER_SS_CTL

Type: RW
Clock: PBUS_WRCLK
Reset State: 0x85
Reset Name: PERPH_RB

S2_CTRL_STEPPER_SS_CTL

Bits	Name	Description
7	STEPPER_EN	Enable soft start voltage stepper (Note 5,6) 0 = voltage stepper is disabled 1 = voltage stepper is enabled 1 = enable 0x0: STEPPER_EN_FALSE 0x1: STEPPER_EN_TRUE
2:0	DELAY	Softstart delay between steps @19.2 MHz, where m = <2:0> (Fsys = 19.2 MHz): 000 = 20-clock cycles 001 = 40-clock cycles 010 = 80-clock cycles 011 = 160-clock cycles 100 = 320-clock cycles 101 = 640-clock cycles 110 = 1280-clock cycles 111 = 2560-clock cycles 0x0: DELAY_20_CLK_CYCLES 0x1: DELAY_40_CLK_CYCLES 0x2: DELAY_80_CLK_CYCLES 0x3: DELAY_160_CLK_CYCLES 0x4: DELAY_320_CLK_CYCLES 0x5: DELAY_640_CLK_CYLES 0x6: DELAY_1280_CLK_CYCLES 0x7: DELAY_2560_CLK_CYCLES

0x00011761 S2_CTRL_STEPPER_VS_CTL

Type: RW
Clock: PBUS_WRCLK
Reset State: 0x85
Reset Name: PERPH_RB

S2_CTRL_STEPPER_VS_CTL

Bits	Name	Description
7	STEPPER_EN	Enable voltage stepper (Note 5,6) 0 = voltage stepper is disabled 1 = voltage stepper is enabled 1 = enable 0x0: STEPPER_EN_FALSE 0x1: STEPPER_EN_TRUE
2:0	DELAY	Softstart delay between steps @19.2 MHz, where m = <2:0> (Fsys = 19.2 MHz): 000 =20-clock cycles 001 = 40-clock cycles 010 = 80-clock cycles 011 = 160-clock cycles 100 = 320-clock cycles 101 = 640-clock cycles 110 = 1280-clock cycles 111 = 2650-clock cycles 0x0: DELAY_20_CLK_CYCLES 0x1: DELAY_40_CLK_CYCLES 0x2: DELAY_80_CLK_CYCLES 0x3: DELAY_160_CLK_CYCLES 0x4: DELAY_320_CLK_CYCLES 0x5: DELAY_640_CLK_CYLES 0x6: DELAY_1280_CLK_CYCLES 0x7: DELAY_2560_CLK_CYCLES

0x00011762 S2_CTRL_FT_CTL

Type: RW
Clock: PBUS_WRCLK
Reset State: 0x00
Reset Name: PERPH_RB

S2_CTRL_FT_CTL

Bits	Name	Description
7	FT_EN	Enable fast transient mode (EN_FT) 0 = fast transient mode is disabled 1 = fast transient mode is enabled 0x0: FT_EN_FALSE 0x1: FT_EN_TRUE

S2_CTRL_FT_CTL (cont.)

Bits	Name	Description
6	GM_BOOST	Boost the main error amplifier Gm by 3X 0 = Error amp gm is given by test register bank1 bits<3:0> 1 = Error amp gm is three times the value in test register bank1 bits<3:0> 0x0: GM_BOOST_FALSE 0x1: GM_BOOST_TRUE
5:3	NL_DEAD_ZONE	Non-linear dead-zone offset (Ios) Ios = m * 0.125 A Where m is the 3-bit register value <5:3> 0x0: NL_DEAD_ZONE_0A 0x1: NL_DEAD_ZONE_0P125A 0x2: NL_DEAD_ZONE_0P25A 0x3: NL_DEAD_ZONE_0P375A 0x4: NL_DEAD_ZONE_0P5A 0x5: NL_DEAD_ZONE_0P625A 0x6: NL_DEAD_ZONE_0P75A 0x7: NL_DEAD_ZONE_0P875A
2:0	NL_CUR_CTL	Non-linear curvature control (non-linear gain control) I_effective = K * Y where K is non-linear gain control Y is a second-order function of Iout of the original error amplifier Ios = m * 0.125 ?A Where m is the 3-bit register value <2:0> 0x0: NL_CUR_CTL_0A 0x1: NL_CUR_CTL_0P125A 0x2: NL_CUR_CTL_0P25A 0x3: NL_CUR_CTL_0P375A 0x4: NL_CUR_CTL_0P5A 0x5: NL_CUR_CTL_0P625A 0x6: NL_CUR_CTL_0P75A 0x7: NL_CUR_CTL_0P875A

0x0001176C S2_CTRL_OCP

Type: RW
Clock: PBUS_WRCLK
Reset State: 0x80
Reset Name: PERPH_RB

S2_CTRL_OCP

Bits	Name	Description
7	ENABLE	1=OCP ENABLE, 0=OCP DISABLE 0x1: OCP_TRUE 0x0: OCP_FALSE

S2_CTRL_OCP (cont.)

Bits	Name	Description
6	OVER_RIDE	0=Normal Operation, 1= Test mode : don't reset the buck but OCP event is triggered 0x1: OCP_TEST_MODE_TRUE 0x0: OCP_TEST_MODE_FALSE
5	CLK_DIV	0=No clock division, 1= divide startup clock by 2 0x1: OCP_STARTUP_CLK_DIV_BY_2_TRUE 0x0: OCP_STARTUP_CLK_DIV_BY_2_FALSE
4	LPM	0=Normal Operation. 1=Low power operation during PFM mode 0x1: OCP_LPM_DURING_PFM_TRUE 0x0: OCP_LPM_DURING_PFM_FALSE
3	IPLIMIT_COUNT	0=count 4 iplimit pulses, 1=count 8 iplimit pulses 0x0: OCP_IPLIMT_COUNT_4 0x1: OCP_IPLIMIT_COUNT_8

45 S2 Power Stage

0x00011800 - 0x00011803 RESERVED

0x00011810 S2_PS_INT_RT_STS

Type: R
Clock: PBUS_WRCLK
Reset State: 0x00
Reset Name: PERPH_RB

Interrupt Real Time Status Bits

S2_PS_INT_RT_STS

Bits	Name	Description
1	HIGH_CURRENT_INT2	Buck current exceeds set level 2 0x0: HIGH_CURRENT_INT2_FALSE 0x1: HIGH_CURRENT_INT2_TRUE
0	HIGH_CURRENT_INT1	Buck current exceeds set level 1 0x0: HIGH_CURRENT_INT1_FALSE 0x1: HIGH_CURRENT_INT1_TRUE

0x00011811 S2_PS_INT_SET_TYPE

Type: RW
Clock: PBUS_WRCLK
Reset State: 0x00
Reset Name: PERPH_RB

0 = use level trigger interrupts, 1 = use edge trigger interrupts

S2_PS_INT_SET_TYPE

Bits	Name	Description
1	HIGH_CURRENT_INT2	0x0: HIGH_CURRENT_INT2_FALSE 0x1: HIGH_CURRENT_INT2_TRUE

S2_PS_INT_SET_TYPE (cont.)

Bits	Name	Description
0	HIGH_CURRENT_INT1	0x0: HIGH_CURRENT_INT1_FALSE 0x1: HIGH_CURRENT_INT1_TRUE

0x00011812 S2_PS_INT_POLARITY_HIGH

Type: RW
Clock: PBUS_WRCLK
Reset State: 0x00
Reset Name: PERPH_RB

1= Interrupt will trigger on a level high (rising edge) event, 0 = level high triggering is disabled

S2_PS_INT_POLARITY_HIGH

Bits	Name	Description
1	HIGH_CURRENT_INT2	0x0: HIGH_CURRENT_INT2_FALSE 0x1: HIGH_CURRENT_INT2_TRUE
0	HIGH_CURRENT_INT1	0x0: HIGH_CURRENT_INT1_FALSE 0x1: HIGH_CURRENT_INT1_TRUE

0x00011813 S2_PS_INT_POLARITY_LOW

Type: RW
Clock: PBUS_WRCLK
Reset State: 0x00
Reset Name: PERPH_RB

1' = Interrupt will trigger on a level low (falling edge) event, '0' = level low triggering is disabled

S2_PS_INT_POLARITY_LOW

Bits	Name	Description
1	HIGH_CURRENT_INT2	0x0: HIGH_CURRENT_INT2_FALSE 0x1: HIGH_CURRENT_INT2_TRUE
0	HIGH_CURRENT_INT1	0x0: HIGH_CURRENT_INT1_FALSE 0x1: HIGH_CURRENT_INT1_TRUE

0x00011814 S2_PS_INT_LATCHED_CLR

Type: W
Clock: PBUS_WRCLK
Reset State: 0x00
Reset Name: PERPH_RB

writing a '1' to this interrupt will rearm the interrupt when an interrupt is pending. It clears the internal sticky and sent bits

S2_PS_INT_LATCHED_CLR

Bits	Name	Description
1	HIGH_CURRENT_INT2	0x0: HIGH_CURRENT_INT2_FALSE 0x1: HIGH_CURRENT_INT2_TRUE
0	HIGH_CURRENT_INT1	0x0: HIGH_CURRENT_INT1_FALSE 0x1: HIGH_CURRENT_INT1_TRUE

0x00011815 S2_PS_INT_EN_SET

Type: RW
Clock: PBUS_WRCLK
Reset State: 0x00
Reset Name: PERPH_RB

writing '0' to this register has no effect. Writing a '1' will enable the corresponding interrupt. Reading this register will readback enable status

PMIC_SET_MASK

S2_PS_INT_EN_SET

Bits	Name	Description
1	HIGH_CURRENT_INT2	0x0: HIGH_CURRENT_INT2_FALSE 0x1: HIGH_CURRENT_INT2_TRUE
0	HIGH_CURRENT_INT1	0x0: HIGH_CURRENT_INT1_FALSE 0x1: HIGH_CURRENT_INT1_TRUE

0x00011816 S2_PS_INT_EN_CLR

Type: RW
Clock: PBUS_WRCLK
Reset State: 0x00
Reset Name: PERPH_RB

writing '0' to this register has no effect. Writing a '1' will disable the corresponding interrupt. Reading this register will readback enable status

PMIC_CLR_MASK=INT_EN_SET

S2_PS_INT_EN_CLR

Bits	Name	Description
1	HIGH_CURRENT_INT2	0x0: HIGH_CURRENT_INT2_FALSE 0x1: HIGH_CURRENT_INT2_TRUE
0	HIGH_CURRENT_INT1	0x0: HIGH_CURRENT_INT1_FALSE 0x1: HIGH_CURRENT_INT1_TRUE

0x00011818 S2_PS_INT_LATCHED_STS

Type: R
Clock: PBUS_WRCLK
Reset State: 0x00
Reset Name: PERPH_RB

Debug: Latched (Sticky) Interrupt. '1' indicates that the interrupt has triggered. Once the latched bit is set it can only be cleared by writing the clear bit.

S2_PS_INT_LATCHED_STS

Bits	Name	Description
1	HIGH_CURRENT_INT2	0x0: HIGH_CURRENT_INT2_FALSE 0x1: HIGH_CURRENT_INT2_TRUE
0	HIGH_CURRENT_INT1	0x0: HIGH_CURRENT_INT1_FALSE 0x1: HIGH_CURRENT_INT1_TRUE

0x00011819 S2_PS_INT_PENDING_STS

Type: R
Clock: PBUS_WRCLK
Reset State: 0x00
Reset Name: PERPH_RB

Debug: Pending is set if interrupt has been sent but not cleared.

S2_PS_INT_PENDING_STS

Bits	Name	Description
1	HIGH_CURRENT_INT2	0x0: HIGH_CURRENT_INT2_FALSE 0x1: HIGH_CURRENT_INT2_TRUE
0	HIGH_CURRENT_INT1	0x0: HIGH_CURRENT_INT1_FALSE 0x1: HIGH_CURRENT_INT1_TRUE

0x0001181A S2_PS_INT_MID_SEL

Type: RW
Clock: PBUS_WRCLK
Reset State: 0x00
Reset Name: PERPH_RB

Selects the MID that will receive the interrupt

S2_PS_INT_MID_SEL

Bits	Name	Description
1:0	INT_MID_SEL	0x0: INT_MID_FALSE 0x1: INT_MID_TRUE

0x0001181B S2_PS_INT_PRIORITY

Type: RW
Clock: PBUS_WRCLK
Reset State: 0x00
Reset Name: PERPH_RB

S2_PS_INT_PRIORITY

Bits	Name	Description
0	INT_PRIORITY	SR=0 A=1 0x0: INT_PRIORITY_FALSE 0x1: INT_PRIORITY_TRUE

0x0001184A S2_PS_PWM_CURRENT_LIM_CTL

Type: RW
Clock: PBUS_WRCLK
Reset State: 0x84
Reset Name: PERPH_RB

S2_PS_PWM_CURRENT_LIM_CTL

Bits	Name	Description
7	CURRENT_LIM_EN	0 = disable 1 = enable 0x0: CURRENT_LIM_EN_FALSE 0x1: CURRENT_LIM_EN_TRUE

S2_PS_PWM_CURRENT_LIM_CTL (cont.)

Bits	Name	Description
2:0	CURRENT_LIM_PWM_SEL	Iplimit_sel<2:0> for current limit threshold programming when operating in PWM mode. Iplimit threshold depends on selected current rating of the power stage S1/S2 --> Iplimit = 4400 mA - m*530 mA S3/S4 --> Iplimit = 2700 mA - m*320 mA where m is the bit value of iplimit_sel<2:0> Note: The preset value of these bits is set to around 1A. The final values are device specific and listed in the device SBI table. 0x0: CURRENT_LIM_PWM_SEL_S3_S4_2700MA_S1_S2_4400MA 0x1: CURRENT_LIM_PWM_SEL_S3_S4_2380MA_S1_S2_3870MA 0x2: CURRENT_LIM_PWM_SEL_S3_S4_2060MA_S1_S2_3340MA 0x3: CURRENT_LIM_PWM_SEL_S3_S4_1740MA_S1_S2_2810MA 0x4: CURRENT_LIM_PWM_SEL_S3_S4_1420MA_S1_S2_2280MA 0x5: CURRENT_LIM_PWM_SEL_S3_S4_1100MA_S1_S2_1750MA 0x6: CURRENT_LIM_PWM_SEL_S3_S4_780MA_S1_S2_1220MA 0x7: CURRENT_LIM_PWM_SEL_S3_S4_460MA_S1_S2_690MA

0x0001184B S2_PS_PFM_CURRENT_LIM_CTL

Type: RW
Clock: PBUS_WRCLK
Reset State: 0x84
Reset Name: PERPH_RB

S2_PS_PFM_CURRENT_LIM_CTL

Bits	Name	Description
7	CURRENT_LIM_EN	0 = disable 1 = enable 0x0: CURRENT_LIM_EN_FALSE 0x1: CURRENT_LIM_EN_TRUE

S2_PS_PFM_CURRENT_LIM_CTL (cont.)

Bits	Name	Description
2:0	CURRENT_LIM_SEL	Iplimit_sel<2:0> for current limit threshold programming when operating in PFM mode. Iplimit = 800 mA - m * 100 mA where m is the bit value of iplimit_sel<2:0> Note: The preset value and the final values of these bits are device specific and listed in the device SBI table. 0x0: CURRENT_LIM_SEL_800MA 0x1: CURRENT_LIM_SEL_700MA 0x2: CURRENT_LIM_SEL_600MA 0x3: CURRENT_LIM_SEL_500MA 0x4: CURRENT_LIM_SEL_400MA 0x5: CURRENT_LIM_SEL_300MA 0x6: CURRENT_LIM_SEL_200MA 0x7: CURRENT_LIM_SEL_100MA

0x00011880 S2_PS_HCINT_EN

Type: RW
Clock: PBUS_WRCLK
Reset State: 0x00
Reset Name: PERPH_RB

S2_PS_HCINT_EN

Bits	Name	Description
7	HCINT_EN	0 = INT disable 1 = INT enable 0x0: INT_DISABLE 0x1: INT_ENABLE

0x00011881 S2_PS_HCINT_CONTROL

Type: RW
Clock: PBUS_WRCLK
Reset State: 0x00
Reset Name: PERPH_RB

S2_PS_HCINT_CONTROL

Bits	Name	Description
5	SET_WINDOW_WIDTH	0 = count 4 to set 1 = count 8 to set 0x0: COUNT4 0x1: COUNT8

S2_PS_HCINT_CONTROL (cont.)

Bits	Name	Description
4	RESET_WINDOW_WIDTH	0 = count 4 to reset 1 = count 8 to reset 0x0: COUNT4RESET 0x1: COUNT8RESET
3:2	INT2_CUR_THRESHOLD	rated current - 10%*(m+1) 0x0: RATED_CURRENT_90PCT 0x1: RATED_CURRENT_80PCT 0x2: RATED_CURRENT_70PCT 0x3: RATED_CURRENT_60PCT
1:0	INT1_CUR_THRESHOLD	rated current - 10%*(m+3) 0x0: RATED_CURRENT_70PCT 0x1: RATED_CURRENT_60PCT 0x2: RATED_CURRENT_50PCT 0x3: RATED_CURRENT_40PCT

46 S2_FREQ_BCLK_GEN_CLK

0x00011900 - 0x00011901 **RESERVED**

0x00011904 S2_FREQ_PERPH_TYPE

Type: R
Clock: PBUS_WRCLK
Reset State: 0x1D
Reset Name: N/A

Peripheral Type

S2_FREQ_PERPH_TYPE

Bits	Name	Description
7:0	TYPE	BCLK GEN

0x00011905 S2_FREQ_PERPH_SUBTYPE

Type: R
Clock: PBUS_WRCLK
Reset State: 0x19
Reset Name: N/A

Peripheral SubType

S2_FREQ_PERPH_SUBTYPE

Bits	Name	Description
7:0	SUBTYPE	BCLK GEN CLK

47 S3_CTRL

0x00011A00 - RESERVED
0x00011A03

0x00011A08 S3_CTRL_STATUS

Type: R
Clock: PBUS_WRCLK
Reset State: 0x00000000
Reset Name: N/A

Status Registers

S3_CTRL_STATUS

Bits	Name	Description
7	VREG_OK	DEF: X 0 = VREG output voltage is below VREG_OK threshold, 1 = VREG output voltage is above VREG_OK threshold 0x0: VREG_OK_FALSE 0x1: VREG_OK_TRUE
2	PS_TRUE	DEF: X 0 = buck is not pulse skipping, 1 = buck is pulse skipping 0x0: PS_FALSE 0x1: PS_TRUE
1	NPM_TRUE	DEF: X 1 = VREG_OK and BUCK is in NPM 0x0: NPM_VREGOK_FALSE 0x1: NPM_VREGOK_TRUE
0	STEPPER_DONE	DEF: X 1 = stepper is done 0x0: STEPPER_DONE_FALSE 0x1: STEPPER_DONE_TRUE

0x00011A10 S3_CTRL_INT_RT_STS

Type: R
Clock: PBUS_WRCLK
Reset State: 0x00
Reset Name: PERPH_RB

Interrupt Real Time Status Bits

S3_CTRL_INT_RT_STS

Bits	Name	Description
0	VREG_OK_INT	Regulator has been successfully enabled 0x0: VREG_OK_INT_FALSE 0x1: VREG_OK_INT_TRUE

0x00011A11 S3_CTRL_INT_SET_TYPE

Type: R
Clock: PBUS_WRCLK
Reset State: 0x00
Reset Name: n/a

0 = use level trigger interrupts, 1 = use edge trigger interrupts

S3_CTRL_INT_SET_TYPE

Bits	Name	Description
0	VREG_OK_INT	0x0: VREG_OK_INT_FALSE 0x1: VREG_OK_INT_TRUE

0x00011A12 S3_CTRL_INT_POLARITY_HIGH

Type: RW
Clock: PBUS_WRCLK
Reset State: 0x00
Reset Name: PERPH_RB

1= Interrupt will trigger on a level high (rising edge) event, 0 = level high triggering is disabled

S3_CTRL_INT_POLARITY_HIGH

Bits	Name	Description
0	VREG_OK_INT	0x0: VREG_OK_INT_FALSE 0x1: VREG_OK_INT_TRUE

0x00011A13 S3_CTRL_INT_POLARITY_LOW

Type: R
Clock: PBUS_WRCLK
Reset State: 0x00
Reset Name: n/a

1' = Interrupt will trigger on a level low (falling edge) event, '0' = level low triggering is disabled

S3_CTRL_INT_POLARITY_LOW

Bits	Name	Description
0	VREG_OK_INT	0x0: VREG_OK_INT_FALSE 0x1: VREG_OK_INT_TRUE

0x00011A14 S3_CTRL_INT_LATCHED_CLR

Type: W
Clock: PBUS_WRCLK
Reset State: 0x00
Reset Name: PERPH_RB

writing a '1' to this interrupt will rearm the interrupt when an interrupt is pending. It clears the internal sticky and sent bits

S3_CTRL_INT_LATCHED_CLR

Bits	Name	Description
0	VREG_OK_INT	0x0: VREG_OK_INT_FALSE 0x1: VREG_OK_INT_TRUE

0x00011A15 S3_CTRL_INT_EN_SET

Type: RW
Clock: PBUS_WRCLK
Reset State: 0x00
Reset Name: PERPH_RB

writing '0' to this register has no effect. Writing a '1' will enable the corresponding interrupt. Reading this register will readback enable status

PMIC_SET_MASK

S3_CTRL_INT_EN_SET

Bits	Name	Description
0	VREG_OK_INT	0x0: VREG_OK_INT_FALSE 0x1: VREG_OK_INT_TRUE

0x00011A16 S3_CTRL_INT_EN_CLR

Type: RW
Clock: PBUS_WRCLK
Reset State: 0x00
Reset Name: PERPH_RB

writing '0' to this register has no effect. Writing a '1' will disable the corresponding interrupt. Reading this register will readback enable status

PMIC_CLR_MASK=INT_EN_SET

S3_CTRL_INT_EN_CLR

Bits	Name	Description
0	VREG_OK_INT	0x0: VREG_OK_INT_FALSE 0x1: VREG_OK_INT_TRUE

0x00011A18 S3_CTRL_INT_LATCHED_STS

Type: R
Clock: PBUS_WRCLK
Reset State: 0x00
Reset Name: PERPH_RB

Debug: Latched (Sticky) Interrupt. '1' indicates that the interrupt has triggered. Once the latched bit is set it can only be cleared by writing the clear bit.

S3_CTRL_INT_LATCHED_STS

Bits	Name	Description
0	VREG_OK_INT	0x0: VREG_OK_INT_FALSE 0x1: VREG_OK_INT_TRUE

0x00011A19 S3_CTRL_INT_PENDING_STS

Type: R
Clock: PBUS_WRCLK
Reset State: 0x00
Reset Name: PERPH_RB

Debug: Pending is set if interrupt has been sent but not cleared.

S3_CTRL_INT_PENDING_STS

Bits	Name	Description
0	VREG_OK_INT	0x0: VREG_OK_INT_FALSE 0x1: VREG_OK_INT_TRUE

0x00011A1A S3_CTRL_INT_MID_SEL

Type: RW
Clock: PBUS_WRCLK
Reset State: 0x00
Reset Name: PERPH_RB

Selects the MID that will receive the interrupt

S3_CTRL_INT_MID_SEL

Bits	Name	Description
1:0	INT_MID_SEL	0x0: INT_MID_FALSE 0x1: INT_MID_TRUE

0x00011A1B S3_CTRL_INT_PRIORITY

Type: RW
Clock: PBUS_WRCLK
Reset State: 0x00
Reset Name: PERPH_RB

S3_CTRL_INT_PRIORITY

Bits	Name	Description
0	INT_PRIORITY	SR=0 A=1 0x0: INT_PRIORITY_FALSE 0x1: INT_PRIORITY_TRUE

0x00011A41 S3_CTRL_VOLTAGE_CTL2

Type: RW
Clock: PBUS_WRCLK
Reset State: 0x4E
Reset Name: PERPH_RB

S3_CTRL_VOLTAGE_CTL2

Bits	Name	Description
6:0	V_SET	For subtype 0D: Vout (mV) = 375 + Vset*12.5 for (0000000~1011111, 7 bit); Vout (mV) = 750 + Vset*25 for (1100000~1111111, last 5 bit); For subtype 10: Vout (mV) = 1550 + Vset*25 for (000000~111111, 6bit), the MSB is ignored.

0x00011A44 S3_CTRL_PFM_CTL

Type: RW
Clock: PBUS_WRCLK
Reset State: 0x81
Reset Name: PERPH_RB

S3_CTRL_PFM_CTL

Bits	Name	Description
7	PFM_VOLT_CTL	1=PFM voltage 1% over PWM voltage; 0=PFM voltage same as PWM voltage 0x0: PFM_VOLT_BOOST_OFF 0x1: PFM_VOLT_BOOST_ON
6	PFM_IBOOST	1=Boost PFM Comparator bias current to 2uA; 0=bias current is 0.5uA 0x0: PFM_IBOOST_FALSE 0x1: PFM_IBOOST_TRUE
5	PFM_TYPE_I	1= Legacy PFM mode (not supported) 0=Advanced PFM mode 0x0: PFM_ADVANCED 0x1: PFM_LEGACY
4	PFM_COMP_HYST	0=2mV, 1=4mV 0x0: PFM_HYST_2MV 0x1: PFM_HYST_4MV
3	PFM_COMP_PLS_FLTR	0=100ns,,,, 1=250ns 0x0: PFM_COMP_PLS_FLTR_100NS 0x1: PFM_COMP_PLS_FLTR_250NS

S3_CTRL_PFM_CTL (cont.)

Bits	Name	Description
1:0	PFM_IPLIM_DLY	00:Delay=75ns 01:Delay=150ns 10:Delay=300ns 11:Delay=600ns 0x0: PFM_IPLIM_CTRL_75NS 0x1: PFM_IPLIMI_CTRL_150NS 0x2: PFM_IPLIM_CTRL_300NS 0x3: PFM_IPLIM_CTRL_600NS

0x00011A45 S3_CTRL_MODE_CTL

Type: RW
Clock: PBUS_WRCLK
Reset State: 0x80
Reset Name: PERPH_RB

Define Buck Mode Transitions

S3_CTRL_MODE_CTL

Bits	Name	Description
7	PWM	Force PWM 0x0: PWM_NO_FORCE 0x1: PWM_FORCE
4	FOLLOW_PMIC_AWAKE	NPM when PMIC_AWAKE (SLEEP_B) = '1' 0x0: FOLLOW_PMIC_AWAKE_FALSE 0x1: FOLLOW_PMIC_AWAKE_TRUE

0x00011A46 S3_CTRL_EN_CTL

Type: RW
Clock: PBUS_WRCLK
Reset State: 0x00
Reset Name: PERPH_RB

S3_CTRL_EN_CTL

Bits	Name	Description
7	PERPH_EN	1' = Enable the BUCK, '0' = do not force BUCK on 0x0: BUCK_ENABLE_FALSE 0x1: BUCK_ENABLE_TRUE

0x00011A48 S3_CTRL_PD_CTL

Type: RW
Clock: PBUS_WRCLK
Reset State: 0x80
Reset Name: PERPH_RB

S3_CTRL_PD_CTL

Bits	Name	Description
7	PD_EN	1' = Enable the pulldown when the regulator is disabled, '0' = pulldown is always disabled. Preset by trim register CTL_TRIM4 0x0: PD_ENABLE_FALSE 0x1: PD_ENABLE_TRUE

0x00011A59 S3_CTRL_PULSE_SKIP_CTL

Type: RW
Clock: PBUS_WRCLK
Reset State: 0x84
Reset Name: PERPH_RB

S3_CTRL_PULSE_SKIP_CTL

Bits	Name	Description
7	PS_EN	Pulse skipping control: 0 = pulse skipping disable 1 = pulse skipping enable 0x0: PS_EN_FALSE 0x1: PS_EN_TRUE
3:2	PS_TIME_HYST	Timing hysteresis for entering pulse-skipping 00 = 2 cycle 01 = 4 cycle 10 = 8 cycle 11 = 16 cycle 0x0: PS_TIME_HYST_2CYCLE 0x1: PS_TIME_HYST_4CYCLE 0x2: PS_TIME_HYST_8CYCLE 0x3: PS_TIME_HYST_16CYLE

0x00011A5A S3_CTRL_PULSE_SKIP_THRES

Type: RW
Clock: PBUS_WRCLK
Reset State: 0x36
Reset Name: PERPH_RB

S3_CTRL_PULSE_SKIP_THRES

Bits	Name	Description
6:3	PS_VRST	0000:150mV 0001:200mV 0010:250mV 0011:275mV 0100:300mV 0101:325mV 0110:350mV 0111:375mV 1000:400mV 1001:450mV 1010:500mV 1011:550mV 1100:600mV 1101:700mV 1110:800mV 1111:850mV 0x0: PS_VRST_150MV 0x1: PS_VRST_200MV 0x2: PS_VRST_250MV 0x3: PS_VRST_275MV 0x4: PS_VRST_300MV 0x5: PS_VRST_325MV 0x6: PS_VRST_350MV 0x7: PS_VRST_375MV 0x8: PS_VRST_400MV 0x9: PS_VRST_450MV 0xA: PS_VRST_500MV 0xB: PS_VRST_550MV 0xC: PS_VRST_600MV 0xD: PS_VRST_700MV 0xE: PS_VRST_800MV 0xF: PS_VRST_850MV
2:0	PS_VSET	VR_SET=(450+m*25)mV or I_LOAD_THRES=(25+m*12.5)mA when m is not 0; VR_SET=VRST when m=0 0x0: PS_VSET_VRSET_VRST 0x1: PS_VSET_VRSET_475MV 0x2: PS_VSET_VRSET_500MV 0x3: PS_VSET_VRSET_525MV 0x4: PS_VSET_VRSET_550MV 0x5: PS_VSET_VRSET_575MV 0x6: PS_VSET_VRSET_600MV 0x7: PS_VSET_VRSET_625MV

0x00011A60 S3_CTRL_STEPPER_SS_CTL

Type: RW
Clock: PBUS_WRCLK
Reset State: 0x85
Reset Name: PERPH_RB

S3_CTRL_STEPPER_SS_CTL

Bits	Name	Description
7	STEPPER_EN	Enable soft start voltage stepper (Note 5,6) 0 = voltage stepper is disabled 1 = voltage stepper is enabled 1 = enable 0x0: STEPPER_EN_FALSE 0x1: STEPPER_EN_TRUE
2:0	DELAY	Softstart delay between steps @19.2 MHz, where m = <2:0> (Fsys = 19.2 MHz): 000 = 20-clock cycles 001 = 40-clock cycles 010 = 80-clock cycles 011 = 160-clock cycles 100 = 320-clock cycles 101 = 640-clock cycles 110 = 1280-clock cycles 111 = 2560-clock cycles 0x0: DELAY_20_CLK_CYCLES 0x1: DELAY_40_CLK_CYCLES 0x2: DELAY_80_CLK_CYCLES 0x3: DELAY_160_CLK_CYCLES 0x4: DELAY_320_CLK_CYCLES 0x5: DELAY_640_CLK_CYLES 0x6: DELAY_1280_CLK_CYCLES 0x7: DELAY_2560_CLK_CYCLES

0x00011A61 S3_CTRL_STEPPER_VS_CTL

Type: RW
Clock: PBUS_WRCLK
Reset State: 0x85
Reset Name: PERPH_RB

S3_CTRL_STEPPER_VS_CTL

Bits	Name	Description
7	STEPPER_EN	Enable voltage stepper (Note 5,6) 0 = voltage stepper is disabled 1 = voltage stepper is enabled 1 = enable 0x0: STEPPER_EN_FALSE 0x1: STEPPER_EN_TRUE
2:0	DELAY	Softstart delay between steps @19.2 MHz, where m = <2:0> (Fsys = 19.2 MHz): 000 =20-clock cycles 001 = 40-clock cycles 010 = 80-clock cycles 011 = 160-clock cycles 100 = 320-clock cycles 101 = 640-clock cycles 110 = 1280-clock cycles 111 = 2650-clock cycles 0x0: DELAY_20_CLK_CYCLES 0x1: DELAY_40_CLK_CYCLES 0x2: DELAY_80_CLK_CYCLES 0x3: DELAY_160_CLK_CYCLES 0x4: DELAY_320_CLK_CYCLES 0x5: DELAY_640_CLK_CYLES 0x6: DELAY_1280_CLK_CYCLES 0x7: DELAY_2560_CLK_CYCLES

0x00011A62 S3_CTRL_FT_CTL

Type: RW
Clock: PBUS_WRCLK
Reset State: 0x00
Reset Name: PERPH_RB

S3_CTRL_FT_CTL

Bits	Name	Description
7	FT_EN	Enable fast transient mode (EN_FT) 0 = fast transient mode is disabled 1 = fast transient mode is enabled 0x0: FT_EN_FALSE 0x1: FT_EN_TRUE

S3_CTRL_FT_CTL (cont.)

Bits	Name	Description
6	GM_BOOST	Boost the main error amplifier Gm by 3X 0 = Error amp gm is given by test register bank1 bits<3:0> 1 = Error amp gm is three times the value in test register bank1 bits<3:0> 0x0: GM_BOOST_FALSE 0x1: GM_BOOST_TRUE
5:3	NL_DEAD_ZONE	Non-linear dead-zone offset (Ios) Ios = m * 0.125 A Where m is the 3-bit register value <5:3> 0x0: NL_DEAD_ZONE_0A 0x1: NL_DEAD_ZONE_0P125A 0x2: NL_DEAD_ZONE_0P25A 0x3: NL_DEAD_ZONE_0P375A 0x4: NL_DEAD_ZONE_0P5A 0x5: NL_DEAD_ZONE_0P625A 0x6: NL_DEAD_ZONE_0P75A 0x7: NL_DEAD_ZONE_0P875A
2:0	NL_CUR_CTL	Non-linear curvature control (non-linear gain control) I_effective = K * Y where K is non-linear gain control Y is a second-order function of Iout of the original error amplifier Ios = m * 0.125 ?A Where m is the 3-bit register value <2:0> 0x0: NL_CUR_CTL_0A 0x1: NL_CUR_CTL_0P125A 0x2: NL_CUR_CTL_0P25A 0x3: NL_CUR_CTL_0P375A 0x4: NL_CUR_CTL_0P5A 0x5: NL_CUR_CTL_0P625A 0x6: NL_CUR_CTL_0P75A 0x7: NL_CUR_CTL_0P875A

48 S3 Power Stage

0x00011B00 - RESERVED
0x00011B03

0x00011B4A S3_PS_PWM_CURRENT_LIM_CTL

Type: RW
Clock: PBUS_WRCLK
Reset State: 0x84
Reset Name: PERPH_RB

S3_PS_PWM_CURRENT_LIM_CTL

Bits	Name	Description
7	CURRENT_LIM_EN	0 = disable 1 = enable 0x0: CURRENT_LIM_EN_FALSE 0x1: CURRENT_LIM_EN_TRUE

S3_PS_PWM_CURRENT_LIM_CTL (cont.)

Bits	Name	Description
2:0	CURRENT_LIM_PWM_SEL	Iplimit_sel<2:0> for current limit threshold programming when operating in PWM mode. Iplimit threshold depends on selected current rating of the power stage S1/S2 --> Iplimit = 4400 mA - m*530 mA S3/S4 --> Iplimit = 2700 mA - m*320 mA where m is the bit value of iplimit_sel<2:0> Note: The preset value of these bits is set to around 1A. The final values are device specific and listed in the device SBI table. 0x0: CURRENT_LIM_PWM_SEL_S3_S4_2700MA_S1_S2_4400MA 0x1: CURRENT_LIM_PWM_SEL_S3_S4_2380MA_S1_S2_3870MA 0x2: CURRENT_LIM_PWM_SEL_S3_S4_2060MA_S1_S2_3340MA 0x3: CURRENT_LIM_PWM_SEL_S3_S4_1740MA_S1_S2_2810MA 0x4: CURRENT_LIM_PWM_SEL_S3_S4_1420MA_S1_S2_2280MA 0x5: CURRENT_LIM_PWM_SEL_S3_S4_1100MA_S1_S2_1750MA 0x6: CURRENT_LIM_PWM_SEL_S3_S4_780MA_S1_S2_1220MA 0x7: CURRENT_LIM_PWM_SEL_S3_S4_460MA_S1_S2_690MA

0x00011B4B S3_PS_PFM_CURRENT_LIM_CTL

Type: RW
Clock: PBUS_WRCLK
Reset State: 0x84
Reset Name: PERPH_RB

S3_PS_PFM_CURRENT_LIM_CTL

Bits	Name	Description
7	CURRENT_LIM_EN	0 = disable 1 = enable 0x0: CURRENT_LIM_EN_FALSE 0x1: CURRENT_LIM_EN_TRUE

S3_PS_PFM_CURRENT_LIM_CTL (cont.)

Bits	Name	Description
2:0	CURRENT_LIM_SEL	Iplimit_sel<2:0> for current limit threshold programming when operating in PFM mode. Iplimit = 800 mA - m * 100 mA where m is the bit value of iplimit_sel<2:0> Note: The preset value and the final values of these bits are device specific and listed in the device SBI table. 0x0: CURRENT_LIM_SEL_800MA 0x1: CURRENT_LIM_SEL_700MA 0x2: CURRENT_LIM_SEL_600MA 0x3: CURRENT_LIM_SEL_500MA 0x4: CURRENT_LIM_SEL_400MA 0x5: CURRENT_LIM_SEL_300MA 0x6: CURRENT_LIM_SEL_200MA 0x7: CURRENT_LIM_SEL_100MA

49 S3_FREQ_BCLK_GEN_CLK

0x00011C00 - RESERVED
0x00011C01

0x00011C04 S3_FREQ_PERPH_TYPE

Type: R
Clock: PBUS_WRCLK
Reset State: 0x1D
Reset Name: N/A

Peripheral Type

S3_FREQ_PERPH_TYPE

Bits	Name	Description
7:0	TYPE	BCLK GEN

0x00011C05 S3_FREQ_PERPH_SUBTYPE

Type: R
Clock: PBUS_WRCLK
Reset State: 0x19
Reset Name: N/A

Peripheral SubType

S3_FREQ_PERPH_SUBTYPE

Bits	Name	Description
7:0	SUBTYPE	BCLK GEN CLK

50 S4_CTRL

0x00011D00 - RESERVED
0x00011D03

0x00011D08 S4_CTRL_STATUS

Type: R
Clock: PBUS_WRCLK
Reset State: 0x00000000
Reset Name: N/A

Status Registers

S4_CTRL_STATUS

Bits	Name	Description
7	VREG_OK	DEF: X 0 = VREG output voltage is below VREG_OK threshold, 1 = VREG output voltage is above VREG_OK threshold 0x0: VREG_OK_FALSE 0x1: VREG_OK_TRUE
2	PS_TRUE	DEF: X 0 = buck is not pulse skipping, 1 = buck is pulse skipping 0x0: PS_FALSE 0x1: PS_TRUE
1	NPM_TRUE	DEF: X 1 = VREG_OK and BUCK is in NPM 0x0: NPM_VREGOK_FALSE 0x1: NPM_VREGOK_TRUE
0	STEPPER_DONE	DEF: X 1 = stepper is done 0x0: STEPPER_DONE_FALSE 0x1: STEPPER_DONE_TRUE

0x00011D10 S4_CTRL_INT_RT_STS

Type: R
Clock: PBUS_WRCLK
Reset State: 0x00
Reset Name: PERPH_RB

Interrupt Real Time Status Bits

S4_CTRL_INT_RT_STS

Bits	Name	Description
0	VREG_OK_INT	Regulator has been successfully enabled 0x0: VREG_OK_INT_FALSE 0x1: VREG_OK_INT_TRUE

0x00011D11 S4_CTRL_INT_SET_TYPE

Type: R
Clock: PBUS_WRCLK
Reset State: 0x00
Reset Name: n/a

0 = use level trigger interrupts, 1 = use edge trigger interrupts

S4_CTRL_INT_SET_TYPE

Bits	Name	Description
0	VREG_OK_INT	0x0: VREG_OK_INT_FALSE 0x1: VREG_OK_INT_TRUE

0x00011D12 S4_CTRL_INT_POLARITY_HIGH

Type: RW
Clock: PBUS_WRCLK
Reset State: 0x00
Reset Name: PERPH_RB

1= Interrupt will trigger on a level high (rising edge) event, 0 = level high triggering is disabled

S4_CTRL_INT_POLARITY_HIGH

Bits	Name	Description
0	VREG_OK_INT	0x0: VREG_OK_INT_FALSE 0x1: VREG_OK_INT_TRUE

0x00011D13 S4_CTRL_INT_POLARITY_LOW

Type: R
Clock: PBUS_WRCLK
Reset State: 0x00
Reset Name: n/a

1' = Interrupt will trigger on a level low (falling edge) event, '0' = level low triggering is disabled

S4_CTRL_INT_POLARITY_LOW

Bits	Name	Description
0	VREG_OK_INT	0x0: VREG_OK_INT_FALSE 0x1: VREG_OK_INT_TRUE

0x00011D14 S4_CTRL_INT_LATCHED_CLR

Type: W
Clock: PBUS_WRCLK
Reset State: 0x00
Reset Name: PERPH_RB

writing a '1' to this interrupt will rearm the interrupt when an interrupt is pending. It clears the internal sticky and sent bits

S4_CTRL_INT_LATCHED_CLR

Bits	Name	Description
0	VREG_OK_INT	0x0: VREG_OK_INT_FALSE 0x1: VREG_OK_INT_TRUE

0x00011D15 S4_CTRL_INT_EN_SET

Type: RW
Clock: PBUS_WRCLK
Reset State: 0x00
Reset Name: PERPH_RB

writing '0' to this register has no effect. Writing a '1' will enable the corresponding interrupt. Reading this register will readback enable status

PMIC_SET_MASK

S4_CTRL_INT_EN_SET

Bits	Name	Description
0	VREG_OK_INT	0x0: VREG_OK_INT_FALSE 0x1: VREG_OK_INT_TRUE

0x00011D16 S4_CTRL_INT_EN_CLR

Type: RW
Clock: PBUS_WRCLK
Reset State: 0x00
Reset Name: PERPH_RB

writing '0' to this register has no effect. Writing a '1' will disable the corresponding interrupt. Reading this register will readback enable status

PMIC_CLR_MASK=INT_EN_SET

S4_CTRL_INT_EN_CLR

Bits	Name	Description
0	VREG_OK_INT	0x0: VREG_OK_INT_FALSE 0x1: VREG_OK_INT_TRUE

0x00011D18 S4_CTRL_INT_LATCHED_STS

Type: R
Clock: PBUS_WRCLK
Reset State: 0x00
Reset Name: PERPH_RB

Debug: Latched (Sticky) Interrupt. '1' indicates that the interrupt has triggered. Once the latched bit is set it can only be cleared by writing the clear bit.

S4_CTRL_INT_LATCHED_STS

Bits	Name	Description
0	VREG_OK_INT	0x0: VREG_OK_INT_FALSE 0x1: VREG_OK_INT_TRUE

0x00011D19 S4_CTRL_INT_PENDING_STS

Type: R
Clock: PBUS_WRCLK
Reset State: 0x00
Reset Name: PERPH_RB

Debug: Pending is set if interrupt has been sent but not cleared.

S4_CTRL_INT_PENDING_STS

Bits	Name	Description
0	VREG_OK_INT	0x0: VREG_OK_INT_FALSE 0x1: VREG_OK_INT_TRUE

0x00011D1A S4_CTRL_INT_MID_SEL

Type: RW
Clock: PBUS_WRCLK
Reset State: 0x00
Reset Name: PERPH_RB

Selects the MID that will receive the interrupt

S4_CTRL_INT_MID_SEL

Bits	Name	Description
1:0	INT_MID_SEL	0x0: INT_MID_FALSE 0x1: INT_MID_TRUE

0x00011D1B S4_CTRL_INT_PRIORITY

Type: RW
Clock: PBUS_WRCLK
Reset State: 0x00
Reset Name: PERPH_RB

S4_CTRL_INT_PRIORITY

Bits	Name	Description
0	INT_PRIORITY	SR=0 A=1 0x0: INT_PRIORITY_FALSE 0x1: INT_PRIORITY_TRUE

0x00011D41 S4_CTRL_VOLTAGE_CTL2

Type: RW
Clock: PBUS_WRCLK
Reset State: 0x1A
Reset Name: PERPH_RB

S4_CTRL_VOLTAGE_CTL2

Bits	Name	Description
6:0	V_SET	For subtype 0D: Vout (mV) = 375 + Vset*12.5 for (0000000~1011111, 7 bit); Vout (mV) = 750 + Vset*25 for (1100000~1111111, last 5 bit); For subtype 10: Vout (mV) = 1550 + Vset*25 for (000000~111111, 6bit), the MSB is ignored.

0x00011D44 S4_CTRL_PFM_CTL

Type: RW
Clock: PBUS_WRCLK
Reset State: 0x81
Reset Name: PERPH_RB

S4_CTRL_PFM_CTL

Bits	Name	Description
7	PFM_VOLT_CTL	1=PFM voltage 1% over PWM voltage; 0=PFM voltage same as PWM voltage 0x0: PFM_VOLT_BOOST_OFF 0x1: PFM_VOLT_BOOST_ON
6	PFM_IBOOST	1=Boost PFM Comparator bias current to 2uA; 0=bias current is 0.5uA 0x0: PFM_IBOOST_FALSE 0x1: PFM_IBOOST_TRUE
5	PFM_TYPE_I	1= Legacy PFM mode (not supported) 0=Advanced PFM mode 0x0: PFM_ADVANCED 0x1: PFM_LEGACY
4	PFM_COMP_HYST	0=2mV, 1=4mV 0x0: PFM_HYST_2MV 0x1: PFM_HYST_4MV
3	PFM_COMP_PLS_FLTR	0=100ns,,,, 1=250ns 0x0: PFM_COMP_PLS_FLTR_100NS 0x1: PFM_COMP_PLS_FLTR_250NS

S4_CTRL_PFM_CTL (cont.)

Bits	Name	Description
1:0	PFM_IPLIM_DLY	00:Delay=75ns 01:Delay=150ns 10:Delay=300ns 11:Delay=600ns 0x0: PFM_IPLIM_CTRL_75NS 0x1: PFM_IPLIMI_CTRL_150NS 0x2: PFM_IPLIM_CTRL_300NS 0x3: PFM_IPLIM_CTRL_600NS

0x00011D45 S4_CTRL_MODE_CTL

Type: RW
Clock: PBUS_WRCLK
Reset State: 0x80
Reset Name: PERPH_RB

Define Buck Mode Transitions

S4_CTRL_MODE_CTL

Bits	Name	Description
7	PWM	Force PWM 0x0: PWM_NO_FORCE 0x1: PWM_FORCE
4	FOLLOW_PMIC_AWAKE	NPM when PMIC_AWAKE (SLEEP_B) = '1' 0x0: FOLLOW_PMIC_AWAKE_FALSE 00x1: FOLLOW_PMIC_AWAKE_TRUE

0x00011D46 S4_CTRL_EN_CTL

Type: RW
Clock: PBUS_WRCLK
Reset State: 0x00
Reset Name: PERPH_RB

S4_CTRL_EN_CTL

Bits	Name	Description
7	PERPH_EN	1' = Enable the BUCK, '0' = do not force BUCK on 0x0: BUCK_ENABLE_FALSE 0x1: BUCK_ENABLE_TRUE

0x00011D48 S4_CTRL_PD_CTL

Type: RW
Clock: PBUS_WRCLK
Reset State: 0x80
Reset Name: PERPH_RB

S4_CTRL_PD_CTL

Bits	Name	Description
7	PD_EN	1' = Enable the pulldown when the regulator is disabled, '0' = pulldown is always disabled. Preset by trim register CTL_TRIM4 0x0: PD_ENABLE_FALSE 0x1: PD_ENABLE_TRUE

0x00011D59 S4_CTRL_PULSE_SKIP_CTL

Type: RW
Clock: PBUS_WRCLK
Reset State: 0x84
Reset Name: PERPH_RB

S4_CTRL_PULSE_SKIP_CTL

Bits	Name	Description
7	PS_EN	Pulse skipping control: 0 = pulse skipping disable 1 = pulse skipping enable 0x0: PS_EN_FALSE 0x1: PS_EN_TRUE
3:2	PS_TIME_HYST	Timing hysteresis for entering pulse-skipping 00 = 2 cycle 01 = 4 cycle 10 = 8 cycle 11 = 16 cycle 0x0: PS_TIME_HYST_2CYCLE 0x1: PS_TIME_HYST_4CYCLE 0x2: PS_TIME_HYST_8CYCLE 0x3: PS_TIME_HYST_16CYLE

0x00011D5A S4_CTRL_PULSE_SKIP_THRES

Type: RW
Clock: PBUS_WRCLK
Reset State: 0x36
Reset Name: PERPH_RB

S4_CTRL_PULSE_SKIP_THRES

Bits	Name	Description
6:3	PS_VRST	0000:150mV 0001:200mV 0010:250mV 0011:275mV 0100:300mV 0101:325mV 0110:350mV 0111:375mV 1000:400mV 1001:450mV 1010:500mV 1011:550mV 1100:600mV 1101:700mV 1110:800mV 1111:850mV 0x0: PS_VRST_150MV 0x1: PS_VRST_200MV 0x2: PS_VRST_250MV 0x3: PS_VRST_275MV 0x4: PS_VRST_300MV 0x5: PS_VRST_325MV 0x6: PS_VRST_350MV 0x7: PS_VRST_375MV 0x8: PS_VRST_400MV 0x9: PS_VRST_450MV 0xA: PS_VRST_500MV 0xB: PS_VRST_550MV 0xC: PS_VRST_600MV 0xD: PS_VRST_700MV 0xE: PS_VRST_800MV 0xF: PS_VRST_850MV
2:0	PS_VSET	VR_SET=(450+m*25)mV or I_LOAD_THRES=(25+m*12.5)mA when m is not 0; VR_SET=VRST when m=0 0x0: PS_VSET_VRSET_VRST 0x1: PS_VSET_VRSET_475MV 0x2: PS_VSET_VRSET_500MV 0x3: PS_VSET_VRSET_525MV 0x4: PS_VSET_VRSET_550MV 0x5: PS_VSET_VRSET_575MV 0x6: PS_VSET_VRSET_600MV 0x7: PS_VSET_VRSET_625MV

0x00011D60 S4_CTRL_STEPPER_SS_CTL

Type: RW
Clock: PBUS_WRCLK
Reset State: 0x85
Reset Name: PERPH_RB

S4_CTRL_STEPPER_SS_CTL

Bits	Name	Description
7	STEPPER_EN	Enable soft start voltage stepper (Note 5,6) 0 = voltage stepper is disabled 1 = voltage stepper is enabled 1 = enable 0x0: STEPPER_EN_FALSE 0x1: STEPPER_EN_TRUE
2:0	DELAY	Softstart delay between steps @19.2 MHz, where m = <2:0> (Fsys = 19.2 MHz): 000 = 20-clock cycles 001 = 40-clock cycles 010 = 80-clock cycles 011 = 160-clock cycles 100 = 320-clock cycles 101 = 640-clock cycles 110 = 1280-clock cycles 111 = 2560-clock cycles 0x0: DELAY_20_CLK_CYCLES 0x1: DELAY_40_CLK_CYCLES 0x2: DELAY_80_CLK_CYCLES 0x3: DELAY_160_CLK_CYCLES 0x4: DELAY_320_CLK_CYCLES 0x5: DELAY_640_CLK_CYLES 0x6: DELAY_1280_CLK_CYCLES 0x7: DELAY_2560_CLK_CYCLES

0x00011D61 S4_CTRL_STEPPER_VS_CTL

Type: RW
Clock: PBUS_WRCLK
Reset State: 0x85
Reset Name: PERPH_RB

S4_CTRL_STEPPER_VS_CTL

Bits	Name	Description
7	STEPPER_EN	Enable voltage stepper (Note 5,6) 0 = voltage stepper is disabled 1 = voltage stepper is enabled 1 = enable 0x0: STEPPER_EN_FALSE 0x1: STEPPER_EN_TRUE
2:0	DELAY	Softstart delay between steps @19.2 MHz, where m = <2:0> (Fsys = 19.2 MHz): 000 =20-clock cycles 001 = 40-clock cycles 010 = 80-clock cycles 011 = 160-clock cycles 100 = 320-clock cycles 101 = 640-clock cycles 110 = 1280-clock cycles 111 = 2650-clock cycles 0x0: DELAY_20_CLK_CYCLES 0x1: DELAY_40_CLK_CYCLES 0x2: DELAY_80_CLK_CYCLES 0x3: DELAY_160_CLK_CYCLES 0x4: DELAY_320_CLK_CYCLES 0x5: DELAY_640_CLK_CYLES 0x6: DELAY_1280_CLK_CYCLES 0x7: DELAY_2560_CLK_CYCLES

0x00011D62 S4_CTRL_FT_CTL

Type: RW
Clock: PBUS_WRCLK
Reset State: 0x00
Reset Name: PERPH_RB

S4_CTRL_FT_CTL

Bits	Name	Description
7	FT_EN	Enable fast transient mode (EN_FT) 0 = fast transient mode is disabled 1 = fast transient mode is enabled 0x0: FT_EN_FALSE 0x1: FT_EN_TRUE

S4_CTRL_FT_CTL (cont.)

Bits	Name	Description
6	GM_BOOST	Boost the main error amplifier Gm by 3X 0 = Error amp gm is given by test register bank1 bits<3:0> 1 = Error amp gm is three times the value in test register bank1 bits<3:0> 0x0: GM_BOOST_FALSE 0x1: GM_BOOST_TRUE
5:3	NL_DEAD_ZONE	Non-linear dead-zone offset (Ios) Ios = m * 0.125 A Where m is the 3-bit register value <5:3> 0x0: NL_DEAD_ZONE_0A 0x1: NL_DEAD_ZONE_0P125A 0x2: NL_DEAD_ZONE_0P25A 0x3: NL_DEAD_ZONE_0P375A 0x4: NL_DEAD_ZONE_0P5A 0x5: NL_DEAD_ZONE_0P625A 0x6: NL_DEAD_ZONE_0P75A 0x7: NL_DEAD_ZONE_0P875A
2:0	NL_CUR_CTL	Non-linear curvature control (non-linear gain control) I_effective = K * Y where K is non-linear gain control Y is a second-order function of Iout of the original error amplifier Ios = m * 0.125 ?A Where m is the 3-bit register value <2:0> 0x0: NL_CUR_CTL_0A 0x1: NL_CUR_CTL_0P125A 0x2: NL_CUR_CTL_0P25A 0x3: NL_CUR_CTL_0P375A 0x4: NL_CUR_CTL_0P5A 0x5: NL_CUR_CTL_0P625A 0x6: NL_CUR_CTL_0P75A 0x7: NL_CUR_CTL_0P875A

51 S4 Power Stage

0x00011E00 - RESERVED
0x00011E03

0x00011E04 S4_PS_PERPH_TYPE

Type: R
Clock: PBUS_WRCLK
Reset State: 0x22
Reset Name: N/A

Peripheral Type

PMIC_CONSTANT

S4_PS_PERPH_TYPE

Bits	Name	Description
7:0	TYPE	SMPS 0x16: SMPS

0x00011E05 S4_PS_PERPH_SUBTYPE

Type: R
Clock: PBUS_WRCLK
Reset State: 0x04
Reset Name: N/A

Peripheral SubType

S4_PS_PERPH_SUBTYPE

Bits	Name	Description
7:0	SUBTYPE	1 -- PS_LV2p5A: buck power stage 2 -- PS_LV3p0A: buck power stage 3 -- PS_LV1p8A: buck power stage 4 -- PS_MV1p5A: buck power stage 5--PS_MV2p5A: buck power stage 0x1: PS_LV2P5A 0x2: PS_LV3P0A 0x3: PS_LV1P8A 0x4: PS_MV1P5A 0x5: PS_MV2P5A

0x00011E4A S4_PS_PWM_CURRENT_LIM_CTL

Type: RW
Clock: PBUS_WRCLK
Reset State: 0x84
Reset Name: PERPH_RB

S4_PS_PWM_CURRENT_LIM_CTL

Bits	Name	Description
7	CURRENT_LIM_EN	0 = disable 1 = enable 0x0: CURRENT_LIM_EN_FALSE 0x1: CURRENT_LIM_EN_TRUE

S4_PS_PWM_CURRENT_LIM_CTL (cont.)

Bits	Name	Description
2:0	CURRENT_LIM_PWM_SEL	Iplimit_sel<2:0> for current limit threshold programming when operating in PWM mode. Iplimit threshold depends on selected current rating of the power stage S1/S2 --> Iplimit = 4400 mA - m*530 mA S3/S4 --> Iplimit = 2700 mA - m*320 mA where m is the bit value of iplimit_sel<2:0> Note: The preset value of these bits is set to around 1A. The final values are device specific and listed in the device SBI table. 0x0: CURRENT_LIM_PWM_SEL_S3_S4_2700MA_S1_S2_4400MA 0x1: CURRENT_LIM_PWM_SEL_S3_S4_2380MA_S1_S2_3870MA 0x2: CURRENT_LIM_PWM_SEL_S3_S4_2060MA_S1_S2_3340MA 0x3: CURRENT_LIM_PWM_SEL_S3_S4_1740MA_S1_S2_2810MA 0x4: CURRENT_LIM_PWM_SEL_S3_S4_1420MA_S1_S2_2280MA 0x5: CURRENT_LIM_PWM_SEL_S3_S4_1100MA_S1_S2_1750MA 0x6: CURRENT_LIM_PWM_SEL_S3_S4_780MA_S1_S2_1220MA 0x7: CURRENT_LIM_PWM_SEL_S3_S4_460MA_S1_S2_690MA

0x00011E4B S4_PS_PFM_CURRENT_LIM_CTL

Type: RW
Clock: PBUS_WRCLK
Reset State: 0x84
Reset Name: PERPH_RB

S4_PS_PFM_CURRENT_LIM_CTL

Bits	Name	Description
7	CURRENT_LIM_EN	0 = disable 1 = enable 0x0: CURRENT_LIM_EN_FALSE 0x1: CURRENT_LIM_EN_TRUE

S4_PS_PFM_CURRENT_LIM_CTL (cont.)

Bits	Name	Description
2:0	CURRENT_LIM_SEL	Iplimit_sel<2:0> for current limit threshold programming when operating in PFM mode. Iplimit = 800 mA - m * 100 mA where m is the bit value of iplimit_sel<2:0> Note: The preset value and the final values of these bits are device specific and listed in the device SBI table. 0x0: CURRENT_LIM_SEL_800MA 0x1: CURRENT_LIM_SEL_700MA 0x2: CURRENT_LIM_SEL_600MA 0x3: CURRENT_LIM_SEL_500MA 0x4: CURRENT_LIM_SEL_400MA 0x5: CURRENT_LIM_SEL_300MA 0x6: CURRENT_LIM_SEL_200MA 0x7: CURRENT_LIM_SEL_100MA

52 S4_FREQ_BCLK_GEN_CLK

0x00011F00 - 0x00011F01 RESERVED

0x00011F04 S4_FREQ_PERPH_TYPE

Type: R
Clock: PBUS_WRCLK
Reset State: 0x1D
Reset Name: N/A

Peripheral Type

S4_FREQ_PERPH_TYPE

Bits	Name	Description
7:0	TYPE	BCLK GEN

0x00011F05 S4_FREQ_PERPH_SUBTYPE

Type: R
Clock: PBUS_WRCLK
Reset State: 0x19
Reset Name: N/A

Peripheral SubType

S4_FREQ_PERPH_SUBTYPE

Bits	Name	Description
7:0	SUBTYPE	BCLK GEN CLK

53 LDO1

0x00014000 - 0x00014003 RESERVED

0x00014008 LDO1_STATUS1

Type: R
Clock: PBUS_WRCLK
Reset State: 0x01
Reset Name: n/a

Status Registers

LDO1_STATUS1

Bits	Name	Description
7	VREG_OK	DEF: X 0 = VREG output voltage is below VREG_OK threshold, 1 = VREG output voltage is above VREG_OK threshold. VREG_OK is also high when LDO is in bypass mode 0x1: LDO_VOLTAGE_OK 0x0: LDO_VOLTAGE_LOW
2	BYPASS_LDO	DEF: X LDO is ON and in bypass mode 0x1: ON_AND_BYPASSED 0x0: OFF_OR_NON_BYPASS
1	NPM_TRUE	DEF: X 1 = VREG_OK and LDO is in NPM 0x1: NPM_VOLTAGE_OK 0x0: NOT_NPM_OR_VOLTAGE_NOT_OK
0	STEPPER_DONE	indicates if LDO voltage steppering is done 0x1: STEPPER_DONE 0x0: STEPPER_NOT_DONE

0x00014009 LDO1_STATUS2

Type: R
Clock: PBUS_WRCLK
Reset State: 0x00
Reset Name: n/a

Status Registers

LDO1_STATUS2

Bits	Name	Description
7	SOFTSTART_DONE	indicates that the startup is complete LDO in normal mode 0x1: SOFTSTART_DONE 0x0: SOFTSTART_NOT_DONE
5	VREG_ON	indicate whether the regulator is on 0x1: LDO_ON 0x0: LDO_OFF

0x00014010 LDO1_INT_RT_STS

Type: R
Clock: PBUS_WRCLK
Reset State: 0x00
Reset Name: n/a

Interrupt Real Time Status Bits

LDO1_INT_RT_STS

Bits	Name	Description
0	VREG_OK_RT_STS	Regulator has been successfully enabled 0x1: LDO_ENABLE_SUCCESS 0x0: LDO_ENABLE_ERR

0x00014011 LDO1_INT_SET_TYPE

Type: R
Clock: PBUS_WRCLK
Reset State: 0x00
Reset Name: n/a

LDO1_INT_SET_TYPE

Bits	Name	Description
0	VREG_OK_TYPE	Interrupt type, edge or level 0x1: VREG_OK_LEVEL_TRIGGERED 0x0: VREG_OK_EDGE_TRIGGERED

0x00014012 LDO1_INT_POLARITY_HIGH

Type: RW
Clock: PBUS_WRCLK
Reset State: 0x00
Reset Name: perph_rb

LDO1_INT_POLARITY_HIGH

Bits	Name	Description
0	VREG_OK_HIGH	Edge type, rising or Level type, high true 0x1: VREG_OK_LOW_TRIGGERED 0x0: VREG_OK_LOW_DISABLED

0x00014013 LDO1_INT_POLARITY_LOW

Type: R
Clock: PBUS_WRCLK
Reset State: 0x00
Reset Name: n/a

LDO1_INT_POLARITY_LOW

Bits	Name	Description
0	VREG_OK_LOW	Edge type, falling or Level type, low true 0x1: VREG_OK_RISING_TRIGGERED 0x0: VREG_OK_FALLING_TRIGGERED

0x00014014 LDO1_INT_LATCHED_CLR

Type: W
Clock: PBUS_WRCLK
Reset State: 0x00
Reset Name: perph_rb

writing a '1' to this interrupt will rearm the interrupt when an interrupt is pending. It clears the internal sticky and sent bits

LDO1_INT_LATCHED_CLR

Bits	Name	Description
0	VREG_OK_LATCHED_CLR	0x1: VREG_OK_ERROR_REARM 0x0: VREG_OK_ERROR_NOT_REARM

0x00014015 LDO1_INT_EN_SET

Type: RW
Clock: PBUS_WRCLK
Reset State: 0x00
Reset Name: perph_rb

writing '0' to this register has no effect. Writing a '1' will enable the corresponding interrupt. Reading this register will readback enable status

PMIC_SET_MASK

LDO1_INT_EN_SET

Bits	Name	Description
0	VREG_OK_EN_SET	0x1: VREG_OK_ERROR_ENABLED 0x0: VREG_OK_ERROR_DISABLED

0x00014016 LDO1_INT_EN_CLR

Type: RW
Clock: PBUS_WRCLK
Reset State: 0x00
Reset Name: perph_rb

writing '0' to this register has no effect. Writing a '1' will disable the corresponding interrupt. Reading this register will readback enable status

PMIC_CLR_MASK=INT_EN_SET

LDO1_INT_EN_CLR

Bits	Name	Description
0	VREG_OK_EN_CLR	0x1: VREG_OK_ERROR_ENABLED 0x0: VREG_OK_ERROR_DISABLED

0x00014018 LDO1_INT_LATCHED_STS

Type: R
Clock: PBUS_WRCLK
Reset State: 0x00
Reset Name: n/a

Latched (Sticky) Interrupt. '1' indicates that the interrupt has triggered. Once the latched bit is set it can only be cleared by writing the clear bit.

LDO1_INT_LATCHED_STS

Bits	Name	Description
0	VREG_OK_LATCHED_STS	Regulator has been successfully enabled 0x1: LDO_VOLTAGE_LOW 0x0: LDO_VOLTAGE_OK

0x00014019 LDO1_INT_PENDING_STS

Type: R
Clock: PBUS_WRCLK
Reset State: 0x00
Reset Name: n/a

Debug: Pending is set if interrupt has been sent but not cleared.

LDO1_INT_PENDING_STS

Bits	Name	Description
0	VREG_OK_PENDING_STS	Regulator has been successfully enabled 0x1: LDO_ENABLE_SUCCESS 0x0: LDO_ENABLE_FALSE

0x0001401A LDO1_INT_MID_SEL

Type: RW
Clock: PBUS_WRCLK
Reset State: 0x00
Reset Name: perph_rb

Selects the MID that will receive the interrupt

LDO1_INT_MID_SEL

Bits	Name	Description
1:0	INT_MID_SEL	0x1: INT_MID_SEL_1 0x0: INT_MID_SEL_0

0x0001401B LDO1_INT_PRIORITY

Type: RW
Clock: PBUS_WRCLK
Reset State: 0x00
Reset Name: perph_rb

LDO1_INT_PRIORITY

Bits	Name	Description
0	INT_PRIORITY	0x1: INT_PRIORITY_A 0x0: INT_PRIORITY_SR

0x00014045 LDO1_MODE_CTL2

Type: RW
Clock: PBUS_WRCLK
Reset State: 0x80
Reset Name: perph_rb

Define LDO Mode Transitions. This register needs to be 0x00 for putting LDO in LPM.

LDO1_MODE_CTL2

Bits	Name	Description
7	NPM	Force NPM 0x1: FORCED_NPM 0x0: FORCED_NPM_FALSE
6	BYPASS_ACT	LDO is in active bypass mode when both BYPASS_ACT and BYPASS_EN are set to 1, while NPM is set to 0 0x1: BYPASS_ACT_TRUE 0x0: BYPASS_ACT_FALSE
5	BYPASS_EN	Enable LDO bypass mode 0x1: BYPASS_ENABLED 0x0: BYPASS_DISABLED
4	FOLLOW_PMIC_AWAKE	1' = (LDO is in NPM when PMIC_AWAKE (SLEEP_B) = '1') or (has no effect on LDO operation mode when PMIC_AWAKE = '0'), '0' = has no effect on LDO operation mode no matter PMIC_AWAKE is 0 or 1 0x1: FOLLOW_PMIC_AWAKE_TRUE 0x0: FOLLOW_PMIC_AWAKE_FALSE

0x00014046 LDO1_EN_CTL

Type: RW
Clock: PBUS_WRCLK
Reset State: 0x00
Reset Name: perph_rb

Enable control register.

LDO1_EN_CTL

Bits	Name	Description
7	EN_LDO_INT	1' = Enable the LDO, '0' = do not force LDO on 0x1: EN_LDO_INT_TRUE 0x0: EN_LDO_INT_FALSE

0x00014048 LDO1_PD_CTL

Type: RW
Clock: PBUS_WRCLK
Reset State: 0x80
Reset Name: perph_rb

LDO pulldown control

LDO1_PD_CTL

Bits	Name	Description
7	PULLDN_EN	1' = Enable the pulldown when the regulator is disabled, '0' = pulldown is always disabled. 0x1: PULLDN_ENABLED 0x0: PULLDN_DIABLED

0x0001404C LDO1_SOFT_START_CTL

Type: RW
Clock: PBUS_WRCLK
Reset State: 0x80
Reset Name: perph_rb

Soft start control register

LDO1_SOFT_START_CTL

Bits	Name	Description
7	SOFT_START	1' = Enable LDO softstart function, '0' = Disable LDO softstart function. 0x1: SOFT_START_ENABLED 0x0: SOFT_START_DISABLED

0x00014052 LDO1_CONFIG_CTL

Type: RW
Clock: PBUS_WRCLK
Reset State: 0x04
Reset Name: perph_rb

Config control register.

LDO1_CONFIG_CTL

Bits	Name	Description
3	ACT_BYPASS_BUFF_EN	1' = LDO buffer stage is enabled when LDO is in active bypass mode, '0' = LDO buffer stage is disabled when LDO is in active bypass mode. 0x1: ACT_BYPASS_BUFF_ENABLED 0x0: ACT_BYPASS_BUFF_DISABLED
2	MODE_TRAN_ENH_EN	PMOS LDO only, when set high, the internal nodes in the error amp are short circuited during NPM-LPM transition 0x1: MODE_TRAN_ENH_ENABLED 0x0: MODE_TRAN_ENH_DISABLED

0x00014061 LDO1_VS_CTL

Type: RW
Clock: PBUS_WRCLK
Reset State: 0x85
Reset Name: perph_rb

LDO voltage stepper control register. NMOS LDO use only.

LDO1_VS_CTL

Bits	Name	Description
7	VS_EN	Enables the stepper 0x1: STEPPER_ENABLED 0x0: STEPPER_DIABLED

LDO1_VS_CTL (cont.)

Bits	Name	Description
2:0	VS_DELAY	Delay (clk_in = 19.2 MHz) -000 = 20 clock cycles (delay of 1 us) -001 = 40 clock cycles (delay of 2 us) -010 = 80 clock cycles (delay of 4.1 us) -011 = 160 clock cycles (delay of 8.3 us) -100 = 320 clock cycles (delay of 16.6 us) -101 = 640 clock cycles (delay of 33.3 us) -110 = 1280 clock cycles (delay of 67 us) -111 = 2560 clock cycles (delay of 134 us) 0x7: DELAY_1_2560 0x6: DELAY_1_1280 0x5: DELAY_1_640 0x4: DELAY_1_320 0x3: DELAY_1_160 0x2: DELAY_1_80 0x1: DELAY_1_40 0x0: DELAY_1_20

54 LDO2

0x00014100 - 0x00014103 RESERVED

0x00014108 LDO2_STATUS1

Type: R
Clock: PBUS_WRCLK
Reset State: 0x01
Reset Name: n/a

Status Registers

LDO2_STATUS1

Bits	Name	Description
7	VREG_OK	DEF: X 0 = VREG output voltage is below VREG_OK threshold, 1 = VREG output voltage is above VREG_OK threshold. VREG_OK is also high when LDO is in bypass mode 0x1: LDO_VOLTAGE_OK 0x0: LDO_VOLTAGE_LOW
2	BYPASS_LDO	DEF: X LDO is ON and in bypass mode 0x1: ON_AND_BYPASSED 0x0: OFF_OR_NON_BYPASS
1	NPM_TRUE	DEF: X 1 = VREG_OK and LDO is in NPM 0x1: NPM_VOLTAGE_OK 0x0: NOT_NPM_OR_VOLTAGE_NOT_OK
0	STEPPER_DONE	indicates if LDO voltage steppering is done 0x1: STEPPER_DONE 0x0: STEPPER_NOT_DONE

0x00014109 LDO2_STATUS2

Type: R
Clock: PBUS_WRCLK
Reset State: 0x00
Reset Name: n/a

Status Registers

LDO2_STATUS2

Bits	Name	Description
7	SOFTSTART_DONE	indicates that the startup is complete LDO in normal mode 0x1: SOFTSTART_DONE 0x0: SOFTSTART_NOT_DONE
5	VREG_ON	indicate whether the regulator is on 0x1: LDO_ON 0x0: LDO_OFF

0x00014110 LDO2_INT_RT_STS

Type: R
Clock: PBUS_WRCLK
Reset State: 0x00
Reset Name: n/a

Interrupt Real Time Status Bits

LDO2_INT_RT_STS

Bits	Name	Description
0	VREG_OK_RT_STS	Regulator has been successfully enabled 0x1: LDO_ENABLE_SUCCESS 0x0: LDO_ENABLE_ERR

0x00014111 LDO2_INT_SET_TYPE

Type: R
Clock: PBUS_WRCLK
Reset State: 0x00
Reset Name: n/a

LDO2_INT_SET_TYPE

Bits	Name	Description
0	VREG_OK_TYPE	Interrupt type, edge or level 0x1: VREG_OK_LEVEL_TRIGGERED 0x0: VREG_OK_EDGE_TRIGGERED

0x00014112 LDO2_INT_POLARITY_HIGH

Type: RW
Clock: PBUS_WRCLK
Reset State: 0x00
Reset Name: perph_rb

LDO2_INT_POLARITY_HIGH

Bits	Name	Description
0	VREG_OK_HIGH	Edge type, rising or Level type, high true 0x1: VREG_OK_LOW_TRIGGERED 0x0: VREG_OK_LOW_DISABLED

0x00014113 LDO2_INT_POLARITY_LOW

Type: R
Clock: PBUS_WRCLK
Reset State: 0x00
Reset Name: n/a

LDO2_INT_POLARITY_LOW

Bits	Name	Description
0	VREG_OK_LOW	Edge type, falling or Level type, low true 0x1: VREG_OK_RISING_TRIGGERED 0x0: VREG_OK_FALLING_TRIGGERED

0x00014114 LDO2_INT_LATCHED_CLR

Type: W
Clock: PBUS_WRCLK
Reset State: 0x00
Reset Name: perph_rb

writing a '1' to this interrupt will rearm the interrupt when an interrupt is pending. It clears the internal sticky and sent bits

LDO2_INT_LATCHED_CLR

Bits	Name	Description
0	VREG_OK_LATCHED_CLR	0x1: VREG_OK_ERROR_REARM 0x0: VREG_OK_ERROR_NOT_REARM

0x00014115 LDO2_INT_EN_SET

Type: RW
Clock: PBUS_WRCLK
Reset State: 0x00
Reset Name: perph_rb

writing '0' to this register has no effect. Writing a '1' will enable the corresponding interrupt. Reading this register will readback enable status

PMIC_SET_MASK

LDO2_INT_EN_SET

Bits	Name	Description
0	VREG_OK_EN_SET	0x1: VREG_OK_ERROR_ENABLED 0x0: VREG_OK_ERROR_DISABLED

0x00014116 LDO2_INT_EN_CLR

Type: RW
Clock: PBUS_WRCLK
Reset State: 0x00
Reset Name: perph_rb

writing '0' to this register has no effect. Writing a '1' will disable the corresponding interrupt. Reading this register will readback enable status

PMIC_CLR_MASK=INT_EN_SET

LDO2_INT_EN_CLR

Bits	Name	Description
0	VREG_OK_EN_CLR	0x1: VREG_OK_ERROR_ENABLED 0x0: VREG_OK_ERROR_DISABLED

0x00014118 LDO2_INT_LATCHED_STS

Type: R
Clock: PBUS_WRCLK
Reset State: 0x00
Reset Name: n/a

Latched (Sticky) Interrupt. '1' indicates that the interrupt has triggered. Once the latched bit is set it can only be cleared by writing the clear bit.

LDO2_INT_LATCHED_STS

Bits	Name	Description
0	VREG_OK_LATCHED_STS	Regulator has been successfully enabled 0x1: LDO_VOLTAGE_LOW 0x0: LDO_VOLTAGE_OK

0x00014119 LDO2_INT_PENDING_STS

Type: R
Clock: PBUS_WRCLK
Reset State: 0x00
Reset Name: n/a

Debug: Pending is set if interrupt has been sent but not cleared.

LDO2_INT_PENDING_STS

Bits	Name	Description
0	VREG_OK_PENDING_STS	Regulator has been successfully enabled 0x1: LDO_ENABLE_SUCCESS 0x0: LDO_ENABLE_FALSE

0x0001411A LDO2_INT_MID_SEL

Type: RW
Clock: PBUS_WRCLK
Reset State: 0x00
Reset Name: perph_rb

Selects the MID that will receive the interrupt

LDO2_INT_MID_SEL

Bits	Name	Description
1:0	INT_MID_SEL	0x1: INT_MID_SEL_1 0x0: INT_MID_SEL_0

0x0001411B LDO2_INT_PRIORITY

Type: RW
Clock: PBUS_WRCLK
Reset State: 0x00
Reset Name: perph_rb

LDO2_INT_PRIORITY

Bits	Name	Description
0	INT_PRIORITY	0x1: INT_PRIORITY_A 0x0: INT_PRIORITY_SR

0x00014145 LDO2_MODE_CTL2

Type: RW
Clock: PBUS_WRCLK
Reset State: 0x80
Reset Name: perph_rb

Define LDO Mode Transitions. This register needs to be 0x00 for putting LDO in LPM.

LDO2_MODE_CTL2

Bits	Name	Description
7	NPM	Force NPM 0x1: FORCED_NPM 0x0: FORCED_NPM_FALSE
6	BYPASS_ACT	LDO is in active bypass mode when both BYPASS_ACT and BYPASS_EN are set to 1, while NPM is set to 0 0x1: BYPASS_ACT_TRUE 0x0: BYPASS_ACT_FALSE
5	BYPASS_EN	Enable LDO bypass mode 0x1: BYPASS_ENABLED 0x0: BYPASS_DISABLED
4	FOLLOW_PMIC_AWAKE	1' = (LDO is in NPM when PMIC_AWAKE (SLEEP_B) = '1') or (has no effect on LDO operation mode when PMIC_AWAKE = '0'), '0' = has no effect on LDO operation mode no matter PMIC_AWAKE is 0 or 1 0x1: FOLLOW_PMIC_AWAKE_TRUE 0x0: FOLLOW_PMIC_AWAKE_FALSE

0x00014146 LDO2_EN_CTL

Type: RW
Clock: PBUS_WRCLK
Reset State: 0x00
Reset Name: perph_rb

Enable control register.

LDO2_EN_CTL

Bits	Name	Description
7	EN_LDO_INT	1' = Enable the LDO, '0' = do not force LDO on 0x1: EN_LDO_INT_TRUE 0x0: EN_LDO_INT_FALSE

0x00014148 LDO2_PD_CTL

Type: RW
Clock: PBUS_WRCLK
Reset State: 0x80
Reset Name: perph_rb

LDO pulldown control

LDO2_PD_CTL

Bits	Name	Description
7	PULLDN_EN	1' = Enable the pulldown when the regulator is disabled, '0' = pulldown is always disabled. 0x1: PULLDN_ENABLED 0x0: PULLDN_DIABLED

0x0001414C LDO2_SOFT_START_CTL

Type: RW
Clock: PBUS_WRCLK
Reset State: 0x80
Reset Name: perph_rb

Soft start control register

LDO2_SOFT_START_CTL

Bits	Name	Description
7	SOFT_START	1' = Enable LDO softstart function, '0' = Disable LDO softstart function. 0x1: SOFT_START_ENABLED 0x0: SOFT_START_DISABLED

0x00014152 LDO2_CONFIG_CTL

Type: RW
Clock: PBUS_WRCLK
Reset State: 0x04
Reset Name: perph_rb

Config control register.

LDO2_CONFIG_CTL

Bits	Name	Description
3	ACT_BYPASS_BUFF_EN	1' = LDO buffer stage is enabled when LDO is in active bypass mode, '0' = LDO buffer stage is disabled when LDO is in active bypass mode. 0x1: ACT_BYPASS_BUFF_ENABLED 0x0: ACT_BYPASS_BUFF_DISABLED
2	MODE_TRAN_ENH_EN	PMOS LDO only, when set high, the internal nodes in the error amp are short circuited during NPM-LPM transition 0x1: MODE_TRAN_ENH_ENABLED 0x0: MODE_TRAN_ENH_DISABLED

0x00014161 LDO2_VS_CTL

Type: RW
Clock: PBUS_WRCLK
Reset State: 0x85
Reset Name: perph_rb

LDO voltage stepper control register. NMOS LDO use only.

LDO2_VS_CTL

Bits	Name	Description
7	VS_EN	Enables the stepper 0x1: STEPPER_ENABLED 0x0: STEPPER_DIABLED

LDO2_VS_CTL (cont.)

Bits	Name	Description
2:0	VS_DELAY	Delay (clk_in = 19.2 MHz) -000 = 20 clock cycles (delay of 1 us) -001 = 40 clock cycles (delay of 2 us) -010 = 80 clock cycles (delay of 4.1 us) -011 = 160 clock cycles (delay of 8.3 us) -100 = 320 clock cycles (delay of 16.6 us) -101 = 640 clock cycles (delay of 33.3 us) -110 = 1280 clock cycles (delay of 67 us) -111 = 2560 clock cycles (delay of 134 us) 0x7: DELAY_1_2560 0x6: DELAY_1_1280 0x5: DELAY_1_640 0x4: DELAY_1_320 0x3: DELAY_1_160 0x2: DELAY_1_80 0x1: DELAY_1_40 0x0: DELAY_1_20

55 LDO3

0x00014200 - 0x00014203 RESERVED

0x00014208 LDO3_STATUS1

Type: R
Clock: PBUS_WRCLK
Reset State: 0x01
Reset Name: n/a

Status Registers

LDO3_STATUS1

Bits	Name	Description
7	VREG_OK	DEF: X 0 = VREG output voltage is below VREG_OK threshold, 1 = VREG output voltage is above VREG_OK threshold. VREG_OK is also high when LDO is in bypass mode 0x1: LDO_VOLTAGE_OK 0x0: LDO_VOLTAGE_LOW
2	BYPASS_LDO	DEF: X LDO is ON and in bypass mode 0x1: ON_AND_BYPASSED 0x0: OFF_OR_NON_BYPASS
1	NPM_TRUE	DEF: X 1 = VREG_OK and LDO is in NPM 0x1: NPM_VOLTAGE_OK 0x0: NOT_NPM_OR_VOLTAGE_NOT_OK
0	STEPPER_DONE	indicates if LDO voltage steppering is done 0x1: STEPPER_DONE 0x0: STEPPER_NOT_DONE

0x00014209 LDO3_STATUS2

Type: R
Clock: PBUS_WRCLK
Reset State: 0x00
Reset Name: n/a

Status Registers

LDO3_STATUS2

Bits	Name	Description
7	SOFTSTART_DONE	indicates that the startup is complete LDO in normal mode 0x1: SOFTSTART_DONE 0x0: SOFTSTART_NOT_DONE
5	VREG_ON	indicate whether the regulator is on 0x1: LDO_ON 0x0: LDO_OFF

0x00014210 LDO3_INT_RT_STS

Type: R
Clock: PBUS_WRCLK
Reset State: 0x00
Reset Name: n/a

Interrupt Real Time Status Bits

LDO3_INT_RT_STS

Bits	Name	Description
0	VREG_OK_RT_STS	Regulator has been successfully enabled 0x1: LDO_ENABLE_SUCCESS 0x0: LDO_ENABLE_ERR

0x00014211 LDO3_INT_SET_TYPE

Type: R
Clock: PBUS_WRCLK
Reset State: 0x00
Reset Name: n/a

LDO3_INT_SET_TYPE

Bits	Name	Description
0	VREG_OK_TYPE	Interrupt type, edge or level 0x1: VREG_OK_LEVEL_TRIGGERED 0x0: VREG_OK_EDGE_TRIGGERED

0x00014212 LDO3_INT_POLARITY_HIGH

Type: RW
Clock: PBUS_WRCLK
Reset State: 0x00
Reset Name: perph_rb

LDO3_INT_POLARITY_HIGH

Bits	Name	Description
0	VREG_OK_HIGH	Edge type, rising or Level type, high true 0x1: VREG_OK_LOW_TRIGGERED 0x0: VREG_OK_LOW_DISABLED

0x00014213 LDO3_INT_POLARITY_LOW

Type: R
Clock: PBUS_WRCLK
Reset State: 0x00
Reset Name: n/a

LDO3_INT_POLARITY_LOW

Bits	Name	Description
0	VREG_OK_LOW	Edge type, falling or Level type, low true 0x1: VREG_OK_RISING_TRIGGERED 0x0: VREG_OK_FALLING_TRIGGERED

0x00014214 LDO3_INT_LATCHED_CLR

Type: W
Clock: PBUS_WRCLK
Reset State: 0x00
Reset Name: perph_rb

writing a '1' to this interrupt will rearm the interrupt when an interrupt is pending. It clears the internal sticky and sent bits

LDO3_INT_LATCHED_CLR

Bits	Name	Description
0	VREG_OK_LATCHED_CLR	0x1: VREG_OK_ERROR_REARM 0x0: VREG_OK_ERROR_NOT_REARM

0x00014215 LDO3_INT_EN_SET

Type: RW
Clock: PBUS_WRCLK
Reset State: 0x00
Reset Name: perph_rb

writing '0' to this register has no effect. Writing a '1' will enable the corresponding interrupt. Reading this register will readback enable status

PMIC_SET_MASK

LDO3_INT_EN_SET

Bits	Name	Description
0	VREG_OK_EN_SET	0x1: VREG_OK_ERROR_ENABLED 0x0: VREG_OK_ERROR_DISABLED

0x00014216 LDO3_INT_EN_CLR

Type: RW
Clock: PBUS_WRCLK
Reset State: 0x00
Reset Name: perph_rb

writing '0' to this register has no effect. Writing a '1' will disable the corresponding interrupt. Reading this register will readback enable status

PMIC_CLR_MASK=INT_EN_SET

LDO3_INT_EN_CLR

Bits	Name	Description
0	VREG_OK_EN_CLR	0x1: VREG_OK_ERROR_ENABLED 0x0: VREG_OK_ERROR_DISABLED

0x00014218 LDO3_INT_LATCHED_STS

Type: R
Clock: PBUS_WRCLK
Reset State: 0x00
Reset Name: n/a

Latched (Sticky) Interrupt. '1' indicates that the interrupt has triggered. Once the latched bit is set it can only be cleared by writing the clear bit.

LDO3_INT_LATCHED_STS

Bits	Name	Description
0	VREG_OK_LATCHED_STS	Regulator has been successfully enabled 0x1: LDO_VOLTAGE_LOW 0x0: LDO_VOLTAGE_OK

0x00014219 LDO3_INT_PENDING_STS

Type: R
Clock: PBUS_WRCLK
Reset State: 0x00
Reset Name: n/a

Debug: Pending is set if interrupt has been sent but not cleared.

LDO3_INT_PENDING_STS

Bits	Name	Description
0	VREG_OK_PENDING_STS	Regulator has been successfully enabled 0x1: LDO_ENABLE_SUCCESS 0x0: LDO_ENABLE_FALSE

0x0001421A LDO3_INT_MID_SEL

Type: RW
Clock: PBUS_WRCLK
Reset State: 0x00
Reset Name: perph_rb

Selects the MID that will receive the interrupt

LDO3_INT_MID_SEL

Bits	Name	Description
1:0	INT_MID_SEL	0x1: INT_MID_SEL_1 0x0: INT_MID_SEL_0

0x0001421B LDO3_INT_PRIORITY

Type: RW
Clock: PBUS_WRCLK
Reset State: 0x00
Reset Name: perph_rb

LDO3_INT_PRIORITY

Bits	Name	Description
0	INT_PRIORITY	0x1: INT_PRIORITY_A 0x0: INT_PRIORITY_SR

0x00014245 LDO3_MODE_CTL2

Type: RW
Clock: PBUS_WRCLK
Reset State: 0x80
Reset Name: perph_rb

Define LDO Mode Transitions. This register needs to be 0x00 for putting LDO in LPM.

LDO3_MODE_CTL2

Bits	Name	Description
7	NPM	Force NPM 0x1: FORCED_NPM 0x1: FORCED_NPM 0x0: FORCED_NPM_FALSE0x0: FORCED_NPM_FALSE
6	BYPASS_ACT	LDO is in active bypass mode when both BYPASS_ACT and BYPASS_EN are set to 1, while NPM is set to 0 0x1: BYPASS_ACT_TRUE 0x0: BYPASS_ACT_FALSE
5	BYPASS_EN	Enable LDO bypass mode 0x1: BYPASS_ENABLED 0x0: BYPASS_DISABLED
4	FOLLOW_PMIC_AWAKE	1' = (LDO is in NPM when PMIC_AWAKE (SLEEP_B) = '1') or (has no effect on LDO operation mode when PMIC_AWAKE = '0'), '0' = has no effect on LDO operation mode no matter PMIC_AWAKE is 0 or 1 0x1: FOLLOW_PMIC_AWAKE_TRUE 0x0: FOLLOW_PMIC_AWAKE_FALSE

0x00014246 LDO3_EN_CTL

Type: RW
Clock: PBUS_WRCLK
Reset State: 0x00
Reset Name: perph_rb

Enable control register.

LDO3_EN_CTL

Bits	Name	Description
7	EN_LDO_INT	1' = Enable the LDO, '0' = do not force LDO on 0x1: EN_LDO_INT_TRUE 0x0: EN_LDO_INT_FALSE

0x00014248 LDO3_PD_CTL

Type: RW
Clock: PBUS_WRCLK
Reset State: 0x80
Reset Name: perph_rb

LDO pulldown control

LDO3_PD_CTL

Bits	Name	Description
7	PULLDN_EN	1' = Enable the pulldown when the regulator is disabled, '0' = pulldown is always disabled. 0x1: PULLDN_ENABLED 0x0: PULLDN_DIABLED

0x0001424C LDO3_SOFT_START_CTL

Type: RW
Clock: PBUS_WRCLK
Reset State: 0x80
Reset Name: perph_rb

Soft start control register

LDO3_SOFT_START_CTL

Bits	Name	Description
7	SOFT_START	1' = Enable LDO softstart function, '0' = Disable LDO softstart function. 0x1: SOFT_START_ENABLED 0x0: SOFT_START_DISABLED

0x00014252 LDO3_CONFIG_CTL

Type: RW
Clock: PBUS_WRCLK
Reset State: 0x04
Reset Name: perph_rb

Config control register.

LDO3_CONFIG_CTL

Bits	Name	Description
3	ACT_BYPASS_BUFF_EN	1' = LDO buffer stage is enabled when LDO is in active bypass mode, '0' = LDO buffer stage is disabled when LDO is in active bypass mode. 0x1: ACT_BYPASS_BUFF_ENABLED 0x0: ACT_BYPASS_BUFF_DISABLED
2	MODE_TRAN_ENH_EN	PMOS LDO only, when set high, the internal nodes in the error amp are short circuited during NPM-LPM transition 0x1: MODE_TRAN_ENH_ENABLED 0x0: MODE_TRAN_ENH_DISABLED

0x00014261 LDO3_VS_CTL

Type: RW
Clock: PBUS_WRCLK
Reset State: 0x85
Reset Name: perph_rb

LDO voltage stepper control register. NMOS LDO use only.

LDO3_VS_CTL

Bits	Name	Description
7	VS_EN	Enables the stepper 0x1: STEPPER_ENABLED 0x0: STEPPER_DIABLED

LDO3_VS_CTL (cont.)

Bits	Name	Description
2:0	VS_DELAY	Delay (clk_in = 19.2 MHz) -000 = 20 clock cycles (delay of 1 us) -001 = 40 clock cycles (delay of 2 us) -010 = 80 clock cycles (delay of 4.1 us) -011 = 160 clock cycles (delay of 8.3 us) -100 = 320 clock cycles (delay of 16.6 us) -101 = 640 clock cycles (delay of 33.3 us) -110 = 1280 clock cycles (delay of 67 us) -111 = 2560 clock cycles (delay of 134 us) 0x7: DELAY_1_2560 0x6: DELAY_1_1280 0x5: DELAY_1_640 0x4: DELAY_1_320 0x3: DELAY_1_160 0x2: DELAY_1_80 0x1: DELAY_1_40 0x0: DELAY_1_20

56 LDO4

0x00014300 - 0x00014303 RESERVED

0x00014304 LDO4_PERPH_TYPE

Type: R
Clock: PBUS_WRCLK
Reset State: 0x21
Reset Name: n/a

Peripheral Type

PMIC_CONSTANT

LDO4_PERPH_TYPE

Bits	Name	Description
7:0	TYPE	LDO

0x00014308 LDO4_STATUS1

Type: R
Clock: PBUS_WRCLK
Reset State: 0x00000000
Reset Name: n/a

Status Registers

LDO4_STATUS1

Bits	Name	Description
7	VREG_OK	DEF: X VREG output voltage level. VREG_OK is always high when LDO is in bypass mode 0x1: LDO_VOLTAGE_OK 0x0: LDO_VOLTAGE_LOW

LDO4_STATUS1 (cont.)

Bits	Name	Description
2	BYPASS_LDO	DEF: X LDO is ON and in bypass mode 0x1: ON_AND_BYPASSED 0x0: OFF_OR_NON_BYPASS
1	NPM_TRUE	DEF: X VREG_OK and LDO is in NPM 0x1: NPM_VOLTAGE_OK 0x0: NOT_NPM_OR_VOLTAGE_NOT_OK

0x00014309 LDO4_STATUS2

Type: R
Clock: PBUS_WRCLK
Reset State: 0x00
Reset Name: n/a

Status Registers

LDO4_STATUS2

Bits	Name	Description
7	SOFTSTART_DONE	indicates that the startup is complete LDO in normal mode 0x1: SOFTSTART_DONE 0x0: SOFTSTART_NOT_DONE
5	VREG_ON	indicate whether the regulator is on 0x1: LDO_ON 0x0: LDO_OFF

0x00014310 LDO4_INT_RT_STS

Type: R
Clock: PBUS_WRCLK
Reset State: 0x00
Reset Name: n/a

Interrupt Real Time Status Bits

LDO4_INT_RT_STS

Bits	Name	Description
0	VREG_OK_RT_STS	Regulator has been successfully enabled 0x1: LDO_ENABLE_SUCCESS 0x0: LDO_ENABLE_ERR

0x00014311 LDO4_INT_SET_TYPE

Type: R
Clock: PBUS_WRCLK
Reset State: 0x00
Reset Name: n/a

LDO4_INT_SET_TYPE

Bits	Name	Description
0	VREG_OK_TYPE	Interrupt type, edge or level 0x1: VREG_OK_LEVEL_TRIGGERED 0x0: VREG_OK_EDGE_TRIGGERED

0x00014312 LDO4_INT_POLARITY_HIGH

Type: RW
Clock: PBUS_WRCLK
Reset State: 0x00
Reset Name: perph_rb

LDO4_INT_POLARITY_HIGH

Bits	Name	Description
0	VREG_OK_HIGH	Edge type, rising or Level type, high true 0x1: VREG_OK_LOW_TRIGGERED 0x0: VREG_OK_LOW_DISABLED

0x00014313 LDO4_INT_POLARITY_LOW

Type: R
Clock: PBUS_WRCLK
Reset State: 0x00
Reset Name: n/a

LDO4_INT_POLARITY_LOW

Bits	Name	Description
0	VREG_OK_LOW	Edge type, falling or Level type, low true 0x1: VREG_OK_RISING_TRIGGERED 0x0: VREG_OK_FALLING_TRIGGERED

0x00014314 LDO4_INT_LATCHED_CLR

Type: W
Clock: PBUS_WRCLK
Reset State: 0x00
Reset Name: perph_rb

writing a '1' to this interrupt will rearm the interrupt when an interrupt is pending. It clears the internal sticky and sent bits

LDO4_INT_LATCHED_CLR

Bits	Name	Description
0	VREG_OK_LATCHED_CLR	0x1: VREG_OK_ERROR_REARM 0x0: VREG_OK_ERROR_NOT_REARM

0x00014315 LDO4_INT_EN_SET

Type: RW
Clock: PBUS_WRCLK
Reset State: 0x00
Reset Name: perph_rb

writing '0' to this register has no effect. Writing a '1' will enable the corresponding interrupt. Reading this register will readback enable status

PMIC_SET_MASK

LDO4_INT_EN_SET

Bits	Name	Description
0	VREG_OK_EN_SET	0x1: VREG_OK_ERROR_ENABLED 0x0: VREG_OK_ERROR_DISABLED

0x00014316 LDO4_INT_EN_CLR

Type: RW
Clock: PBUS_WRCLK
Reset State: 0x00
Reset Name: perph_rb

writing '0' to this register has no effect. Writing a '1' will disable the corresponding interrupt. Reading this register will readback enable status

PMIC_CLR_MASK=INT_EN_SET

LDO4_INT_EN_CLR

Bits	Name	Description
0	VREG_OK_EN_CLR	0x1: VREG_OK_ERROR_ENABLED 0x0: VREG_OK_ERROR_DISABLED

0x00014318 LDO4_INT_LATCHED_STS

Type: R
Clock: PBUS_WRCLK
Reset State: 0x00
Reset Name: n/a

Latched (Sticky) Interrupt. '1' indicates that the interrupt has triggered. Once the latched bit is set it can only be cleared by writing the clear bit.

LDO4_INT_LATCHED_STS

Bits	Name	Description
0	VREG_OK_LATCHED_STS	Regulator has been successfully enabled 0x1: LDO_VOLTAGE_LOW 0x0: LDO_VOLTAGE_OK

0x00014319 LDO4_INT_PENDING_STS

Type: R
Clock: PBUS_WRCLK
Reset State: 0x00
Reset Name: n/a

Debug: Pending is set if interrupt has been sent but not cleared.

LDO4_INT_PENDING_STS

Bits	Name	Description
0	VREG_OK_PENDING_STS	Regulator has been successfully enabled 0x1: LDO_ENABLE_SUCCESS 0x0: LDO_ENABLE_FALSE

0x0001431A LDO4_INT_MID_SEL

Type: RW
Clock: PBUS_WRCLK
Reset State: 0x00
Reset Name: perph_rb

Selects the MID that will receive the interrupt

LDO4_INT_MID_SEL

Bits	Name	Description
1:0	INT_MID_SEL	0x1: INT_MID_SEL_1 0x0: INT_MID_SEL_0

0x0001431B LDO4_INT_PRIORITY

Type: RW
Clock: PBUS_WRCLK
Reset State: 0x00
Reset Name: perph_rb

LDO4_INT_PRIORITY

Bits	Name	Description
0	INT_PRIORITY	0x1: INT_PRIORITY_A 0x0: INT_PRIORITY_SR

0x00014341 LDO4_VOLTAGE_CTL2

Type: RW
Clock: PBUS_WRCLK
Reset State: 0x18
Reset Name: perph_rb

LDO4_VOLTAGE_CTL2

Bits	Name	Description
6:0	VSET	Voltage = Vmin + VSET*(Vstep)

0x00014345 LDO4_MODE_CTL2

Type: RW
Clock: PBUS_WRCLK
Reset State: 0x80
Reset Name: perph_rb

Define LDO Mode Transitions

LDO4_MODE_CTL2

Bits	Name	Description
7	NPM	Force NPM 0x1: FORCED_NPM 0x0: FORCED_NPM_FALSE
6	BYPASS_ACT	0x1: BYPASS_ACT_TRUE 0x0: BYPASS_ACT_FALSE
5	BYPASS_EN	Enable LDO bypass mode 0x1: BYPASS_ENABLED 0x0: BYPASS_DISABLED
4	FOLLOW_PMIC_AWAKE	NPM when PMIC_AWAKE (SLEEP_B) 0x1: FOLLOW_PMIC_AWAKE_TRUE 0x0: FOLLOW_PMIC_AWAKE_FALSE

0x00014346 LDO4_EN_CTL

Type: RW
Clock: PBUS_WRCLK
Reset State: 0x00
Reset Name: perph_rb

LDO4_EN_CTL

Bits	Name	Description
7	EN_LDO_INT	1' = Enable the LDO, '0' = do not force LDO on 0x1: EN_LDO_INT_TRUE 0x0: EN_LDO_INT_FALSE

0x00014348 LDO4_PD_CTL

Type: RW
Clock: PBUS_WRCLK
Reset State: 0x80
Reset Name: perph_rb

LDO4_PD_CTL

Bits	Name	Description
7	PULLDN_EN	Enable the pulldown when the regulator is disabled 0x1: PULLDN_ENABLED 0x0: PULLDN_DIABLED

0x0001434C LDO4_SOFT_START_CTL

Type: RW
Clock: PBUS_WRCLK
Reset State: 0x80
Reset Name: perph_rb

LDO4_SOFT_START_CTL

Bits	Name	Description
7	SOFT_START	0x1: SOFT_START_ENABLED 0x0: SOFT_START_DISABLED

0x00014352 LDO4_CONFIG_CTL

Type: RW
Clock: PBUS_WRCLK
Reset State: 0x04
Reset Name: perph_rb

LDO4_CONFIG_CTL

Bits	Name	Description
3	ACT_BYPASS_BUFF_EN	0x1: ACT_BYPASS_BUFF_ENABLED 0x0: ACT_BYPASS_BUFF_DISABLED
2	MODE_TRAN_ENH_EN	PMOS LDO only, when set high, the internal nodes in the error amp are short circuited during NPM?LPM transition 0x1: MODE_TRAN_ENH_ENABLED 0x0: MODE_TRAN_ENH_DISABLED

57 LDO5

0x00014400 - 0x00014403 RESERVED

0x00014404 LDO5_PERPH_TYPE

Type: R
Clock: PBUS_WRCLK
Reset State: 0x21
Reset Name: n/a

Peripheral Type

PMIC_CONSTANT

LDO5_PERPH_TYPE

Bits	Name	Description
7:0	TYPE	LDO

0x00014408 LDO5_STATUS1

Type: R
Clock: PBUS_WRCLK
Reset State: 0x00000000
Reset Name: n/a

Status Registers

LDO5_STATUS1

Bits	Name	Description
7	VREG_OK	DEF: X VREG output voltage level. VREG_OK is always high when LDO is in bypass mode 0x1: LDO_VOLTAGE_OK 0x0: LDO_VOLTAGE_LOW

LDO5_STATUS1 (cont.)

Bits	Name	Description
2	BYPASS_LDO	DEF: X LDO is ON and in bypass mode 0x1: ON_AND_BYPASSED 0x0: OFF_OR_NON_BYPASS
1	NPM_TRUE	DEF: X VREG_OK and LDO is in NPM 0x1: NPM_VOLTAGE_OK 0x0: NOT_NPM_OR_VOLTAGE_NOT_OK

0x00014409 LDO5_STATUS2

Type: R
Clock: PBUS_WRCLK
Reset State: 0x00
Reset Name: n/a

Status Registers

LDO5_STATUS2

Bits	Name	Description
7	SOFTSTART_DONE	indicates that the startup is complete LDO in normal mode 0x1: SOFTSTART_DONE 0x0: SOFTSTART_NOT_DONE
5	VREG_ON	indicate whether the regulator is on 0x1: LDO_ON 0x0: LDO_OFF

0x00014410 LDO5_INT_RT_STS

Type: R
Clock: PBUS_WRCLK
Reset State: 0x00
Reset Name: n/a

Interrupt Real Time Status Bits

LDO5_INT_RT_STS

Bits	Name	Description
0	VREG_OK_RT_STS	Regulator has been successfully enabled 0x1: LDO_ENABLE_SUCCESS 0x0: LDO_ENABLE_ERR

0x00014411 LDO5_INT_SET_TYPE

Type: R
Clock: PBUS_WRCLK
Reset State: 0x00
Reset Name: n/a

LDO5_INT_SET_TYPE

Bits	Name	Description
0	VREG_OK_TYPE	Interrupt type, edge or level 0x1: VREG_OK_LEVEL_TRIGGERED 0x0: VREG_OK_EDGE_TRIGGERED

0x00014412 LDO5_INT_POLARITY_HIGH

Type: RW
Clock: PBUS_WRCLK
Reset State: 0x00
Reset Name: perph_rb

LDO5_INT_POLARITY_HIGH

Bits	Name	Description
0	VREG_OK_HIGH	Edge type, rising or Level type, high true 0x1: VREG_OK_LOW_TRIGGERED 0x0: VREG_OK_LOW_DISABLED

0x00014413 LDO5_INT_POLARITY_LOW

Type: R
Clock: PBUS_WRCLK
Reset State: 0x00
Reset Name: n/a

LDO5_INT_POLARITY_LOW

Bits	Name	Description
0	VREG_OK_LOW	Edge type, falling or Level type, low true 0x1: VREG_OK_RISING_TRIGGERED 0x0: VREG_OK_FALLING_TRIGGERED

0x00014414 LDO5_INT_LATCHED_CLR

Type: W
Clock: PBUS_WRCLK
Reset State: 0x00
Reset Name: perph_rb

writing a '1' to this interrupt will rearm the interrupt when an interrupt is pending. It clears the internal sticky and sent bits

LDO5_INT_LATCHED_CLR

Bits	Name	Description
0	VREG_OK_LATCHED_CLR	0x1: VREG_OK_ERROR_REARM 0x0: VREG_OK_ERROR_NOT_REARM

0x00014415 LDO5_INT_EN_SET

Type: RW
Clock: PBUS_WRCLK
Reset State: 0x00
Reset Name: perph_rb

writing '0' to this register has no effect. Writing a '1' will enable the corresponding interrupt. Reading this register will readback enable status

PMIC_SET_MASK

LDO5_INT_EN_SET

Bits	Name	Description
0	VREG_OK_EN_SET	0x1: VREG_OK_ERROR_ENABLED 0x0: VREG_OK_ERROR_DISABLED

0x00014416 LDO5_INT_EN_CLR

Type: RW
Clock: PBUS_WRCLK
Reset State: 0x00
Reset Name: perph_rb

writing '0' to this register has no effect. Writing a '1' will disable the corresponding interrupt. Reading this register will readback enable status

PMIC_CLR_MASK=INT_EN_SET

LDO5_INT_EN_CLR

Bits	Name	Description
0	VREG_OK_EN_CLR	0x1: VREG_OK_ERROR_ENABLED 0x0: VREG_OK_ERROR_DISABLED

0x00014418 LDO5_INT_LATCHED_STS

Type: R
Clock: PBUS_WRCLK
Reset State: 0x00
Reset Name: n/a

Latched (Sticky) Interrupt. '1' indicates that the interrupt has triggered. Once the latched bit is set it can only be cleared by writing the clear bit.

LDO5_INT_LATCHED_STS

Bits	Name	Description
0	VREG_OK_LATCHED_STS	Regulator has been successfully enabled 0x1: LDO_VOLTAGE_LOW 0x0: LDO_VOLTAGE_OK

0x00014419 LDO5_INT_PENDING_STS

Type: R
Clock: PBUS_WRCLK
Reset State: 0x00
Reset Name: n/a

Debug: Pending is set if interrupt has been sent but not cleared.

LDO5_INT_PENDING_STS

Bits	Name	Description
0	VREG_OK_PENDING_STS	Regulator has been successfully enabled 0x1: LDO_ENABLE_SUCCESS 0x0: LDO_ENABLE_FALSE

0x0001441A LDO5_INT_MID_SEL

Type: RW
Clock: PBUS_WRCLK
Reset State: 0x00
Reset Name: perph_rb

Selects the MID that will receive the interrupt

LDO5_INT_MID_SEL

Bits	Name	Description
1:0	INT_MID_SEL	0x1: INT_MID_SEL_1 0x0: INT_MID_SEL_0

0x0001441B LDO5_INT_PRIORITY

Type: RW
Clock: PBUS_WRCLK
Reset State: 0x00
Reset Name: perph_rb

LDO5_INT_PRIORITY

Bits	Name	Description
0	INT_PRIORITY	0x1: INT_PRIORITY_A 0x0: INT_PRIORITY_SR

0x00014441 LDO5_VOLTAGE_CTL2

Type: RW
Clock: PBUS_WRCLK
Reset State: 0x04
Reset Name: perph_rb

LDO5_VOLTAGE_CTL2

Bits	Name	Description
6:0	VSET	Voltage = Vmin + VSET*(Vstep)

0x00014445 LDO5_MODE_CTL2

Type: RW
Clock: PBUS_WRCLK
Reset State: 0x80
Reset Name: perph_rb

Define LDO Mode Transitions

LDO5_MODE_CTL2

Bits	Name	Description
7	NPM	Force NPM 0x1: FORCED_NPM 0x0: FORCED_NPM_FALSE
6	BYPASS_ACT	0x1: BYPASS_ACT_TRUE 0x0: BYPASS_ACT_FALSE
5	BYPASS_EN	Enable LDO bypass mode 0x1: BYPASS_ENABLED 0x0: BYPASS_DISABLED
4	FOLLOW_PMIC_AWAKE	NPM when PMIC_AWAKE (SLEEP_B) 0x1: FOLLOW_PMIC_AWAKE_TRUE 0x0: FOLLOW_PMIC_AWAKE_FALSE

0x00014446 LDO5_EN_CTL

Type: RW
Clock: PBUS_WRCLK
Reset State: 0x00
Reset Name: perph_rb

LDO5_EN_CTL

Bits	Name	Description
7	EN_LDO_INT	1' = Enable the LDO, '0' = do not force LDO on 0x1: EN_LDO_INT_TRUE 0x0: EN_LDO_INT_FALSE

0x00014448 LDO5_PD_CTL

Type: RW
Clock: PBUS_WRCLK
Reset State: 0x80
Reset Name: perph_rb

LDO5_PD_CTL

Bits	Name	Description
7	PULLDN_EN	Enable the pulldown when the regulator is disabled 0x1: PULLDN_ENABLED 0x0: PULLDN_DIABLED

0x0001444C LDO5_SOFT_START_CTL

Type: RW
Clock: PBUS_WRCLK
Reset State: 0x80
Reset Name: perph_rb

LDO5_SOFT_START_CTL

Bits	Name	Description
7	SOFT_START	0x1: SOFT_START_ENABLED 0x0: SOFT_START_DISABLED

0x00014452 LDO5_CONFIG_CTL

Type: RW
Clock: PBUS_WRCLK
Reset State: 0x04
Reset Name: perph_rb

LDO5_CONFIG_CTL

Bits	Name	Description
3	ACT_BYPASS_BUFF_EN	0x1: ACT_BYPASS_BUFF_ENABLED 0x0: ACT_BYPASS_BUFF_DISABLED
2	MODE_TRAN_ENH_EN	PMOS LDO only, when set high, the internal nodes in the error amp are short circuited during NPM?LPM transition 0x1: MODE_TRAN_ENH_ENABLED 0x0: MODE_TRAN_ENH_DISABLED

58 LDO6

0x00014500 - 0x00014503 RESERVED

0x00014504 LDO6_PERPH_TYPE

Type: R
Clock: PBUS_WRCLK
Reset State: 0x21
Reset Name: n/a

Peripheral Type

PMIC_CONSTANT

LDO6_PERPH_TYPE

Bits	Name	Description
7:0	TYPE	LDO

0x00014508 LDO6_STATUS1

Type: R
Clock: PBUS_WRCLK
Reset State: 0x00000000
Reset Name: n/a

Status Registers

LDO6_STATUS1

Bits	Name	Description
7	VREG_OK	DEF: X VREG output voltage level. VREG_OK is always high when LDO is in bypass mode 0x1: LDO_VOLTAGE_OK 0x0: LDO_VOLTAGE_LOW

LDO6_STATUS1 (cont.)

Bits	Name	Description
2	BYPASS_LDO	DEF: X LDO is ON and in bypass mode 0x1: ON_AND_BYPASSED 0x0: OFF_OR_NON_BYPASS
1	NPM_TRUE	DEF: X VREG_OK and LDO is in NPM 0x1: NPM_VOLTAGE_OK 0x0: NOT_NPM_OR_VOLTAGE_NOT_OK

0x00014509 LDO6_STATUS2

Type: R
Clock: PBUS_WRCLK
Reset State: 0x00
Reset Name: n/a

Status Registers

LDO6_STATUS2

Bits	Name	Description
7	SOFTSTART_DONE	indicates that the startup is complete LDO in normal mode 0x1: SOFTSTART_DONE 0x0: SOFTSTART_NOT_DONE
5	VREG_ON	indicate whether the regulator is on 0x1: LDO_ON 0x0: LDO_OFF

0x00014510 LDO6_INT_RT_STS

Type: R
Clock: PBUS_WRCLK
Reset State: 0x00
Reset Name: n/a

Interrupt Real Time Status Bits

LDO6_INT_RT_STS

Bits	Name	Description
0	VREG_OK_RT_STS	Regulator has been successfully enabled 0x1: LDO_ENABLE_SUCCESS 0x0: LDO_ENABLE_ERR

0x00014511 LDO6_INT_SET_TYPE

Type: R
Clock: PBUS_WRCLK
Reset State: 0x00
Reset Name: n/a

LDO6_INT_SET_TYPE

Bits	Name	Description
0	VREG_OK_TYPE	Interrupt type, edge or level 0x1: VREG_OK_LEVEL_TRIGGERED 0x0: VREG_OK_EDGE_TRIGGERED

0x00014512 LDO6_INT_POLARITY_HIGH

Type: RW
Clock: PBUS_WRCLK
Reset State: 0x00
Reset Name: perph_rb

LDO6_INT_POLARITY_HIGH

Bits	Name	Description
0	VREG_OK_HIGH	Edge type, rising or Level type, high true 0x1: VREG_OK_LOW_TRIGGERED 0x0: VREG_OK_LOW_DISABLED

0x00014513 LDO6_INT_POLARITY_LOW

Type: R
Clock: PBUS_WRCLK
Reset State: 0x00
Reset Name: n/a

LDO6_INT_POLARITY_LOW

Bits	Name	Description
0	VREG_OK_LOW	Edge type, falling or Level type, low true 0x1: VREG_OK_RISING_TRIGGERED 0x0: VREG_OK_FALLING_TRIGGERED

0x00014514 LDO6_INT_LATCHED_CLR

Type: W
Clock: PBUS_WRCLK
Reset State: 0x00
Reset Name: perph_rb

writing a '1' to this interrupt will rearm the interrupt when an interrupt is pending. It clears the internal sticky and sent bits

LDO6_INT_LATCHED_CLR

Bits	Name	Description
0	VREG_OK_LATCHED_CLR	0x1: VREG_OK_ERROR_REARM 0x0: VREG_OK_ERROR_NOT_REARM

0x00014515 LDO6_INT_EN_SET

Type: RW
Clock: PBUS_WRCLK
Reset State: 0x00
Reset Name: perph_rb

writing '0' to this register has no effect. Writing a '1' will enable the corresponding interrupt. Reading this register will readback enable status

PMIC_SET_MASK

LDO6_INT_EN_SET

Bits	Name	Description
0	VREG_OK_EN_SET	0x1: VREG_OK_ERROR_ENABLED 0x0: VREG_OK_ERROR_DISABLED

0x00014516 LDO6_INT_EN_CLR

Type: RW
Clock: PBUS_WRCLK
Reset State: 0x00
Reset Name: perph_rb

writing '0' to this register has no effect. Writing a '1' will disable the corresponding interrupt. Reading this register will readback enable status

PMIC_CLR_MASK=INT_EN_SET

LDO6_INT_EN_CLR

Bits	Name	Description
0	VREG_OK_EN_CLR	0x1: VREG_OK_ERROR_ENABLED 0x0: VREG_OK_ERROR_DISABLED

0x00014518 LDO6_INT_LATCHED_STS

Type: R
Clock: PBUS_WRCLK
Reset State: 0x00
Reset Name: n/a

Latched (Sticky) Interrupt. '1' indicates that the interrupt has triggered. Once the latched bit is set it can only be cleared by writing the clear bit.

LDO6_INT_LATCHED_STS

Bits	Name	Description
0	VREG_OK_LATCHED_STS	Regulator has been successfully enabled 0x1: LDO_VOLTAGE_LOW 0x0: LDO_VOLTAGE_OK

0x00014519 LDO6_INT_PENDING_STS

Type: R
Clock: PBUS_WRCLK
Reset State: 0x00
Reset Name: n/a

Debug: Pending is set if interrupt has been sent but not cleared.

LDO6_INT_PENDING_STS

Bits	Name	Description
0	VREG_OK_PENDING_STS	Regulator has been successfully enabled 0x1: LDO_ENABLE_SUCCESS 0x0: LDO_ENABLE_FALSE

0x0001451A LDO6_INT_MID_SEL

Type: RW
Clock: PBUS_WRCLK
Reset State: 0x00
Reset Name: perph_rb

Selects the MID that will receive the interrupt

LDO6_INT_MID_SEL

Bits	Name	Description
1:0	INT_MID_SEL	0x1: INT_MID_SEL_1 0x0: INT_MID_SEL_0

0x0001451B LDO6_INT_PRIORITY

Type: RW
Clock: PBUS_WRCLK
Reset State: 0x00
Reset Name: perph_rb

LDO6_INT_PRIORITY

Bits	Name	Description
0	INT_PRIORITY	0x1: INT_PRIORITY_A 0x0: INT_PRIORITY_SR

0x00014541 LDO6_VOLTAGE_CTL2

Type: RW
Clock: PBUS_WRCLK
Reset State: 0x04
Reset Name: perph_rb

LDO6_VOLTAGE_CTL2

Bits	Name	Description
6:0	VSET	Voltage = Vmin + VSET*(Vstep)

0x00014545 LDO6_MODE_CTL2

Type: RW
Clock: PBUS_WRCLK
Reset State: 0x80
Reset Name: perph_rb

Define LDO Mode Transitions

LDO6_MODE_CTL2

Bits	Name	Description
7	NPM	Force NPM 0x1: FORCED_NPM 0x0: FORCED_NPM_FALSE
6	BYPASS_ACT	0x1: BYPASS_ACT_TRUE 0x0: BYPASS_ACT_FALSE
5	BYPASS_EN	Enable LDO bypass mode 0x1: BYPASS_ENABLED 0x0: BYPASS_DISABLED
4	FOLLOW_PMIC_AWAKE	NPM when PMIC_AWAKE (SLEEP_B) 0x1: FOLLOW_PMIC_AWAKE_TRUE 0x0: FOLLOW_PMIC_AWAKE_FALSE

0x00014546 LDO6_EN_CTL

Type: RW
Clock: PBUS_WRCLK
Reset State: 0x00
Reset Name: perph_rb

LDO6_EN_CTL

Bits	Name	Description
7	EN_LDO_INT	1' = Enable the LDO, '0' = do not force LDO on 0x1: EN_LDO_INT_TRUE 0x0: EN_LDO_INT_FALSE

0x00014548 LDO6_PD_CTL

Type: RW
Clock: PBUS_WRCLK
Reset State: 0x80
Reset Name: perph_rb

LDO6_PD_CTL

Bits	Name	Description
7	PULLDN_EN	Enable the pulldown when the regulator is disabled 0x1: PULLDN_ENABLED 0x0: PULLDN_DIABLED

0x0001454C LDO6_SOFT_START_CTL

Type: RW
Clock: PBUS_WRCLK
Reset State: 0x80
Reset Name: perph_rb

LDO6_SOFT_START_CTL

Bits	Name	Description
7	SOFT_START	0x1: SOFT_START_ENABLED 0x0: SOFT_START_DISABLED

0x00014552 LDO6_CONFIG_CTL

Type: RW
Clock: PBUS_WRCLK
Reset State: 0x04
Reset Name: perph_rb

LDO6_CONFIG_CTL

Bits	Name	Description
3	ACT_BYPASS_BUFF_EN	0x1: ACT_BYPASS_BUFF_ENABLED 0x0: ACT_BYPASS_BUFF_DISABLED
2	MODE_TRAN_ENH_EN	PMOS LDO only, when set high, the internal nodes in the error amp are short circuited during NPM?LPM transition 0x1: MODE_TRAN_ENH_ENABLED 0x0: MODE_TRAN_ENH_DISABLED

59 LDO7

0x00014600 - 0x00014603 RESERVED

0x00014604 LDO7_PERPH_TYPE

Type: R
Clock: PBUS_WRCLK
Reset State: 0x21
Reset Name: n/a

Peripheral Type

PMIC_CONSTANT

LDO7_PERPH_TYPE

Bits	Name	Description
7:0	TYPE	LDO

0x00014608 LDO7_STATUS1

Type: R
Clock: PBUS_WRCLK
Reset State: 0x00000000
Reset Name: n/a

Status Registers

LDO7_STATUS1

Bits	Name	Description
7	VREG_OK	DEF: X VREG output voltage level. VREG_OK is always high when LDO is in bypass mode 0x1: LDO_VOLTAGE_OK 0x0: LDO_VOLTAGE_LOW

LDO7_STATUS1 (cont.)

Bits	Name	Description
2	BYPASS_LDO	DEF: X LDO is ON and in bypass mode 0x1: ON_AND_BYPASSED 0x0: OFF_OR_NON_BYPASS
1	NPM_TRUE	DEF: X VREG_OK and LDO is in NPM 0x1: NPM_VOLTAGE_OK 0x0: NOT_NPM_OR_VOLTAGE_NOT_OK

0x00014609 LDO7_STATUS2

Type: R
Clock: PBUS_WRCLK
Reset State: 0x00
Reset Name: n/a

Status Registers

LDO7_STATUS2

Bits	Name	Description
7	SOFTSTART_DONE	indicates that the startup is complete LDO in normal mode 0x1: SOFTSTART_DONE 0x0: SOFTSTART_NOT_DONE
5	VREG_ON	indicate whether the regulator is on 0x1: LDO_ON 0x0: LDO_OFF

0x00014610 LDO7_INT_RT_STS

Type: R
Clock: PBUS_WRCLK
Reset State: 0x00
Reset Name: n/a

Interrupt Real Time Status Bits

LDO7_INT_RT_STS

Bits	Name	Description
0	VREG_OK_RT_STS	Regulator has been successfully enabled 0x1: LDO_ENABLE_SUCCESS 0x0: LDO_ENABLE_ERR

0x00014611 LDO7_INT_SET_TYPE

Type: R
Clock: PBUS_WRCLK
Reset State: 0x00
Reset Name: n/a

LDO7_INT_SET_TYPE

Bits	Name	Description
0	VREG_OK_TYPE	Interrupt type, edge or level 0x1: VREG_OK_LEVEL_TRIGGERED 0x0: VREG_OK_EDGE_TRIGGERED

0x00014612 LDO7_INT_POLARITY_HIGH

Type: RW
Clock: PBUS_WRCLK
Reset State: 0x00
Reset Name: perph_rb

LDO7_INT_POLARITY_HIGH

Bits	Name	Description
0	VREG_OK_HIGH	Edge type, rising or Level type, high true 0x1: VREG_OK_LOW_TRIGGERED 0x0: VREG_OK_LOW_DISABLED

0x00014613 LDO7_INT_POLARITY_LOW

Type: R
Clock: PBUS_WRCLK
Reset State: 0x00
Reset Name: n/a

LDO7_INT_POLARITY_LOW

Bits	Name	Description
0	VREG_OK_LOW	Edge type, falling or Level type, low true 0x1: VREG_OK_RISING_TRIGGERED 0x0: VREG_OK_FALLING_TRIGGERED

0x00014614 LDO7_INT_LATCHED_CLR

Type: W
Clock: PBUS_WRCLK
Reset State: 0x00
Reset Name: perph_rb

writing a '1' to this interrupt will rearm the interrupt when an interrupt is pending. It clears the internal sticky and sent bits

LDO7_INT_LATCHED_CLR

Bits	Name	Description
0	VREG_OK_LATCHED_CLR	0x1: VREG_OK_ERROR_REARM 0x0: VREG_OK_ERROR_NOT_REARM

0x00014615 LDO7_INT_EN_SET

Type: RW
Clock: PBUS_WRCLK
Reset State: 0x00
Reset Name: perph_rb

writing '0' to this register has no effect. Writing a '1' will enable the corresponding interrupt. Reading this register will readback enable status

PMIC_SET_MASK

LDO7_INT_EN_SET

Bits	Name	Description
0	VREG_OK_EN_SET	0x1: VREG_OK_ERROR_ENABLED 0x0: VREG_OK_ERROR_DISABLED

0x00014616 LDO7_INT_EN_CLR

Type: RW
Clock: PBUS_WRCLK
Reset State: 0x00
Reset Name: perph_rb

writing '0' to this register has no effect. Writing a '1' will disable the corresponding interrupt. Reading this register will readback enable status

PMIC_CLR_MASK=INT_EN_SET

LDO7_INT_EN_CLR

Bits	Name	Description
0	VREG_OK_EN_CLR	0x1: VREG_OK_ERROR_ENABLED 0x0: VREG_OK_ERROR_DISABLED

0x00014618 LDO7_INT_LATCHED_STS

Type: R
Clock: PBUS_WRCLK
Reset State: 0x00
Reset Name: n/a

Latched (Sticky) Interrupt. '1' indicates that the interrupt has triggered. Once the latched bit is set it can only be cleared by writing the clear bit.

LDO7_INT_LATCHED_STS

Bits	Name	Description
0	VREG_OK_LATCHED_STS	Regulator has been successfully enabled 0x1: LDO_VOLTAGE_LOW 0x0: LDO_VOLTAGE_OK

0x00014619 LDO7_INT_PENDING_STS

Type: R
Clock: PBUS_WRCLK
Reset State: 0x00
Reset Name: n/a

Debug: Pending is set if interrupt has been sent but not cleared.

LDO7_INT_PENDING_STS

Bits	Name	Description
0	VREG_OK_PENDING_STS	Regulator has been successfully enabled 0x1: LDO_ENABLE_SUCCESS 0x0: LDO_ENABLE_FALSE

0x0001461A LDO7_INT_MID_SEL

Type: RW
Clock: PBUS_WRCLK
Reset State: 0x00
Reset Name: perph_rb

Selects the MID that will receive the interrupt

LDO7_INT_MID_SEL

Bits	Name	Description
1:0	INT_MID_SEL	0x1: INT_MID_SEL_1 0x0: INT_MID_SEL_0

0x0001461B LDO7_INT_PRIORITY

Type: RW
Clock: PBUS_WRCLK
Reset State: 0x00
Reset Name: perph_rb

LDO7_INT_PRIORITY

Bits	Name	Description
0	INT_PRIORITY	0x1: INT_PRIORITY_A 0x0: INT_PRIORITY_SR

0x00014641 LDO7_VOLTAGE_CTL2

Type: RW
Clock: PBUS_WRCLK
Reset State: 0x04
Reset Name: perph_rb

LDO7_VOLTAGE_CTL2

Bits	Name	Description
6:0	VSET	Voltage = Vmin + VSET*(Vstep)

0x00014645 LDO7_MODE_CTL2

Type: RW
Clock: PBUS_WRCLK
Reset State: 0x80
Reset Name: perph_rb

Define LDO Mode Transitions

LDO7_MODE_CTL2

Bits	Name	Description
7	NPM	Force NPM 0x1: FORCED_NPM 0x0: FORCED_NPM_FALSE
6	BYPASS_ACT	0x1: BYPASS_ACT_TRUE 0x0: BYPASS_ACT_FALSE
5	BYPASS_EN	Enable LDO bypass mode 0x1: BYPASS_ENABLED 0x0: BYPASS_DISABLED
4	FOLLOW_PMIC_AWAKE	NPM when PMIC_AWAKE (SLEEP_B) 0x1: FOLLOW_PMIC_AWAKE_TRUE 0x0: FOLLOW_PMIC_AWAKE_FALSE

0x00014646 LDO7_EN_CTL

Type: RW
Clock: PBUS_WRCLK
Reset State: 0x00
Reset Name: perph_rb

LDO7_EN_CTL

Bits	Name	Description
7	EN_LDO_INT	1' = Enable the LDO, '0' = do not force LDO on 0x1: EN_LDO_INT_TRUE 0x0: EN_LDO_INT_FALSE

0x00014648 LDO7_PD_CTL

Type: RW
Clock: PBUS_WRCLK
Reset State: 0x80
Reset Name: perph_rb

LDO7_PD_CTL

Bits	Name	Description
7	PULLDN_EN	Enable the pulldown when the regulator is disabled 0x1: PULLDN_ENABLED 0x0: PULLDN_DIABLED

0x0001464C LDO7_SOFT_START_CTL

Type: RW
Clock: PBUS_WRCLK
Reset State: 0x80
Reset Name: perph_rb

LDO7_SOFT_START_CTL

Bits	Name	Description
7	SOFT_START	0x1: SOFT_START_ENABLED 0x0: SOFT_START_DISABLED

0x00014652 LDO7_CONFIG_CTL

Type: RW
Clock: PBUS_WRCLK
Reset State: 0x04
Reset Name: perph_rb

LDO7_CONFIG_CTL

Bits	Name	Description
3	ACT_BYPASS_BUFF_EN	0x1: ACT_BYPASS_BUFF_ENABLED 0x0: ACT_BYPASS_BUFF_DISABLED
2	MODE_TRAN_ENH_EN	PMOS LDO only, when set high, the internal nodes in the error amp are short circuited during NPM?LPM transition 0x1: MODE_TRAN_ENH_ENABLED 0x0: MODE_TRAN_ENH_DISABLED

60 LDO8

0x00014700 - 0x00014703 RESERVED

0x00014704 LDO8_PERPH_TYPE

Type: R
Clock: PBUS_WRCLK
Reset State: 0x21
Reset Name: n/a

Peripheral Type

PMIC_CONSTANT

LDO8_PERPH_TYPE

Bits	Name	Description
7:0	TYPE	LDO

0x00014708 LDO8_STATUS1

Type: R
Clock: PBUS_WRCLK
Reset State: 0x00000000
Reset Name: n/a

Status Registers

LDO8_STATUS1

Bits	Name	Description
7	VREG_OK	DEF: X VREG output voltage level. VREG_OK is always high when LDO is in bypass mode 0x1: LDO_VOLTAGE_OK 0x0: LDO_VOLTAGE_LOW

LDO8_STATUS1 (cont.)

Bits	Name	Description
2	BYPASS_LDO	DEF: X LDO is ON and in bypass mode 0x1: ON_AND_BYPASSED 0x0: OFF_OR_NON_BYPASS
1	NPM_TRUE	DEF: X VREG_OK and LDO is in NPM 0x1: NPM_VOLTAGE_OK 0x0: NOT_NPM_OR_VOLTAGE_NOT_OK

0x00014709 LDO8_STATUS2

Type: R
Clock: PBUS_WRCLK
Reset State: 0x00
Reset Name: n/a

Status Registers

LDO8_STATUS2

Bits	Name	Description
7	SOFTSTART_DONE	indicates that the startup is complete LDO in normal mode 0x1: SOFTSTART_DONE 0x0: SOFTSTART_NOT_DONE
5	VREG_ON	indicate whether the regulator is on 0x1: LDO_ON 0x0: LDO_OFF

0x00014710 LDO8_INT_RT_STS

Type: R
Clock: PBUS_WRCLK
Reset State: 0x00
Reset Name: n/a

Interrupt Real Time Status Bits

LDO8_INT_RT_STS

Bits	Name	Description
0	VREG_OK_RT_STS	Regulator has been successfully enabled 0x1: LDO_ENABLE_SUCCESS 0x0: LDO_ENABLE_ERR

0x00014711 LDO8_INT_SET_TYPE

Type: R
Clock: PBUS_WRCLK
Reset State: 0x00
Reset Name: n/a

LDO8_INT_SET_TYPE

Bits	Name	Description
0	VREG_OK_TYPE	Interrupt type, edge or level 0x1: VREG_OK_LEVEL_TRIGGERED 0x0: VREG_OK_EDGE_TRIGGERED

0x00014712 LDO8_INT_POLARITY_HIGH

Type: RW
Clock: PBUS_WRCLK
Reset State: 0x00
Reset Name: perph_rb

LDO8_INT_POLARITY_HIGH

Bits	Name	Description
0	VREG_OK_HIGH	Edge type, rising or Level type, high true 0x1: VREG_OK_LOW_TRIGGERED 0x0: VREG_OK_LOW_DISABLED

0x00014713 LDO8_INT_POLARITY_LOW

Type: R
Clock: PBUS_WRCLK
Reset State: 0x00
Reset Name: n/a

LDO8_INT_POLARITY_LOW

Bits	Name	Description
0	VREG_OK_LOW	Edge type, falling or Level type, low true 0x1: VREG_OK_RISING_TRIGGERED 0x0: VREG_OK_FALLING_TRIGGERED

0x00014714 LDO8_INT_LATCHED_CLR

Type: W
Clock: PBUS_WRCLK
Reset State: 0x00
Reset Name: perph_rb

writing a '1' to this interrupt will rearm the interrupt when an interrupt is pending. It clears the internal sticky and sent bits

LDO8_INT_LATCHED_CLR

Bits	Name	Description
0	VREG_OK_LATCHED_CLR	0x1: VREG_OK_ERROR_REARM 0x0: VREG_OK_ERROR_NOT_REARM

0x00014715 LDO8_INT_EN_SET

Type: RW
Clock: PBUS_WRCLK
Reset State: 0x00
Reset Name: perph_rb

writing '0' to this register has no effect. Writing a '1' will enable the corresponding interrupt. Reading this register will readback enable status

PMIC_SET_MASK

LDO8_INT_EN_SET

Bits	Name	Description
0	VREG_OK_EN_SET	0x1: VREG_OK_ERROR_ENABLED 0x0: VREG_OK_ERROR_DISABLED

0x00014716 LDO8_INT_EN_CLR

Type: RW
Clock: PBUS_WRCLK
Reset State: 0x00
Reset Name: perph_rb

writing '0' to this register has no effect. Writing a '1' will disable the corresponding interrupt. Reading this register will readback enable status

PMIC_CLR_MASK=INT_EN_SET

LDO8_INT_EN_CLR

Bits	Name	Description
0	VREG_OK_EN_CLR	0x1: VREG_OK_ERROR_ENABLED 0x0: VREG_OK_ERROR_DISABLED

0x00014718 LDO8_INT_LATCHED_STS

Type: R
Clock: PBUS_WRCLK
Reset State: 0x00
Reset Name: n/a

Latched (Sticky) Interrupt. '1' indicates that the interrupt has triggered. Once the latched bit is set it can only be cleared by writing the clear bit.

LDO8_INT_LATCHED_STS

Bits	Name	Description
0	VREG_OK_LATCHED_STS	Regulator has been successfully enabled 0x1: LDO_VOLTAGE_LOW 0x0: LDO_VOLTAGE_OK

0x00014719 LDO8_INT_PENDING_STS

Type: R
Clock: PBUS_WRCLK
Reset State: 0x00
Reset Name: n/a

Debug: Pending is set if interrupt has been sent but not cleared.

LDO8_INT_PENDING_STS

Bits	Name	Description
0	VREG_OK_PENDING_STS	Regulator has been successfully enabled 0x1: LDO_ENABLE_SUCCESS 0x0: LDO_ENABLE_FALSE

0x0001471A LDO8_INT_MID_SEL

Type: RW
Clock: PBUS_WRCLK
Reset State: 0x00
Reset Name: perph_rb

Selects the MID that will receive the interrupt

LDO8_INT_MID_SEL

Bits	Name	Description
1:0	INT_MID_SEL	0x1: INT_MID_SEL_1 0x0: INT_MID_SEL_0

0x0001471B LDO8_INT_PRIORITY

Type: RW
Clock: PBUS_WRCLK
Reset State: 0x00
Reset Name: perph_rb

LDO8_INT_PRIORITY

Bits	Name	Description
0	INT_PRIORITY	0x1: INT_PRIORITY_A 0x0: INT_PRIORITY_SR

0x00014741 LDO8_VOLTAGE_CTL2

Type: RW
Clock: PBUS_WRCLK
Reset State: 0x5C
Reset Name: perph_rb

LDO8_VOLTAGE_CTL2

Bits	Name	Description
6:0	VSET	Voltage = Vmin + VSET*(Vstep)

0x00014745 LDO8_MODE_CTL2

Type: RW
Clock: PBUS_WRCLK
Reset State: 0x80
Reset Name: perph_rb

Define LDO Mode Transitions

LDO8_MODE_CTL2

Bits	Name	Description
7	NPM	Force NPM 0x1: FORCED_NPM 0x0: FORCED_NPM_FALSE
6	BYPASS_ACT	0x1: BYPASS_ACT_TRUE 0x0: BYPASS_ACT_FALSE
5	BYPASS_EN	Enable LDO bypass mode 0x1: BYPASS_ENABLED 0x0: BYPASS_DISABLED
4	FOLLOW_PMIC_AWAKE	NPM when PMIC_AWAKE (SLEEP_B) 0x1: FOLLOW_PMIC_AWAKE_TRUE 0x0: FOLLOW_PMIC_AWAKE_FALSE

0x00014746 LDO8_EN_CTL

Type: RW
Clock: PBUS_WRCLK
Reset State: 0x00
Reset Name: perph_rb

LDO8_EN_CTL

Bits	Name	Description
7	EN_LDO_INT	1' = Enable the LDO, '0' = do not force LDO on 0x1: EN_LDO_INT_TRUE 0x0: EN_LDO_INT_FALSE

0x00014748 LDO8_PD_CTL

Type: RW
Clock: PBUS_WRCLK
Reset State: 0x80
Reset Name: perph_rb

LDO8_PD_CTL

Bits	Name	Description
7	PULLDN_EN	Enable the pulldown when the regulator is disabled 0x1: PULLDN_ENABLED 0x0: PULLDN_DIABLED

0x0001474C LDO8_SOFT_START_CTL

Type: RW
Clock: PBUS_WRCLK
Reset State: 0x80
Reset Name: perph_rb

LDO8_SOFT_START_CTL

Bits	Name	Description
7	SOFT_START	0x1: SOFT_START_ENABLED 0x0: SOFT_START_DISABLED

0x00014752 LDO8_CONFIG_CTL

Type: RW
Clock: PBUS_WRCLK
Reset State: 0x04
Reset Name: perph_rb

LDO8_CONFIG_CTL

Bits	Name	Description
3	ACT_BYPASS_BUFF_EN	0x1: ACT_BYPASS_BUFF_ENABLED 0x0: ACT_BYPASS_BUFF_DISABLED
2	MODE_TRAN_ENH_EN	PMOS LDO only, when set high, the internal nodes in the error amp are short circuited during NPM?LPM transition 0x1: MODE_TRAN_ENH_ENABLED 0x0: MODE_TRAN_ENH_DISABLED

61 LDO9

0x00014800 - 0x00014803 RESERVED

0x00014802 LDO9_REVISION3

Type: R
Clock: PBUS_WRCLK
Reset State: 0x00
Reset Name: n/a

HW Version Register [23:16]

LDO9_REVISION3

Bits	Name	Description
7:0	ANA_MINOR	This number is incremented for analog change that is not intended to affect software or any change that adds a new feature but is backwards compatible with old software. Software changes may be required to take advantage of the new features. Minor resets to zero when Major increments.

0x00014803 LDO9_REVISION4

Type: R
Clock: PBUS_WRCLK
Reset State: 0x01
Reset Name: n/a

HW Version Register [31:24]

LDO9_REVISION4

Bits	Name	Description
7:0	ANA_MAJOR	This number is incremented when changes are made to the analog HW that are not backwards compatible with existing software.

0x00014804 LDO9_PERPH_TYPE

Type: R
Clock: PBUS_WRCLK
Reset State: 0x21
Reset Name: n/a

Peripheral Type

PMIC_CONSTANT

LDO9_PERPH_TYPE

Bits	Name	Description
7:0	TYPE	LDO

0x00014808 LDO9_STATUS1

Type: R
Clock: PBUS_WRCLK
Reset State: 0x00000000
Reset Name: n/a

Status Registers

LDO9_STATUS1

Bits	Name	Description
7	VREG_OK	DEF: X VREG output voltage level. VREG_OK is always high when LDO is in bypass mode 0x1: LDO_VOLTAGE_OK 0x0: LDO_VOLTAGE_LOW
2	BYPASS_LDO	DEF: X LDO is ON and in bypass mode 0x1: ON_AND_BYPASSED 0x0: OFF_OR_NON_BYPASS
1	NPM_TRUE	DEF: X VREG_OK and LDO is in NPM 0x1: NPM_VOLTAGE_OK 0x0: NOT_NPM_OR_VOLTAGE_NOT_OK

0x00014809 LDO9_STATUS2

Type: R
Clock: PBUS_WRCLK
Reset State: 0x00
Reset Name: n/a

Status Registers

LDO9_STATUS2

Bits	Name	Description
7	SOFTSTART_DONE	indicates that the startup is complete LDO in normal mode 0x1: SOFTSTART_DONE 0x0: SOFTSTART_NOT_DONE
5	VREG_ON	indicate whether the regulator is on 0x1: LDO_ON 0x0: LDO_OFF

0x00014810 LDO9_INT_RT_STS

Type: R
Clock: PBUS_WRCLK
Reset State: 0x00
Reset Name: n/a

Interrupt Real Time Status Bits

LDO9_INT_RT_STS

Bits	Name	Description
0	VREG_OK_RT_STS	Regulator has been successfully enabled 0x1: LDO_ENABLE_SUCCESS 0x0: LDO_ENABLE_ERR

0x00014811 LDO9_INT_SET_TYPE

Type: R
Clock: PBUS_WRCLK
Reset State: 0x00
Reset Name: n/a

LDO9_INT_SET_TYPE

Bits	Name	Description
0	VREG_OK_TYPE	Interrupt type, edge or level 0x1: VREG_OK_LEVEL_TRIGGERED 0x0: VREG_OK_EDGE_TRIGGERED

0x00014812 LDO9_INT_POLARITY_HIGH

Type: RW
Clock: PBUS_WRCLK
Reset State: 0x00
Reset Name: perph_rb

LDO9_INT_POLARITY_HIGH

Bits	Name	Description
0	VREG_OK_HIGH	Edge type, rising or Level type, high true 0x1: VREG_OK_LOW_TRIGGERED 0x0: VREG_OK_LOW_DISABLED

0x00014813 LDO9_INT_POLARITY_LOW

Type: R
Clock: PBUS_WRCLK
Reset State: 0x00
Reset Name: n/a

LDO9_INT_POLARITY_LOW

Bits	Name	Description
0	VREG_OK_LOW	Edge type, falling or Level type, low true 0x1: VREG_OK_RISING_TRIGGERED 0x0: VREG_OK_FALLING_TRIGGERED

0x00014814 LDO9_INT_LATCHED_CLR

Type: W
Clock: PBUS_WRCLK
Reset State: 0x00
Reset Name: perph_rb

writing a '1' to this interrupt will rearm the interrupt when an interrupt is pending. It clears the internal sticky and sent bits

LDO9_INT_LATCHED_CLR

Bits	Name	Description
0	VREG_OK_LATCHED_CLR	0x1: VREG_OK_ERROR_REARM 0x0: VREG_OK_ERROR_NOT_REARM

0x00014815 LDO9_INT_EN_SET

Type: RW
Clock: PBUS_WRCLK
Reset State: 0x00
Reset Name: perph_rb

writing '0' to this register has no effect. Writing a '1' will enable the corresponding interrupt. Reading this register will readback enable status

PMIC_SET_MASK

LDO9_INT_EN_SET

Bits	Name	Description
0	VREG_OK_EN_SET	0x1: VREG_OK_ERROR_ENABLED 0x0: VREG_OK_ERROR_DISABLED

0x00014816 LDO9_INT_EN_CLR

Type: RW
Clock: PBUS_WRCLK
Reset State: 0x00
Reset Name: perph_rb

writing '0' to this register has no effect. Writing a '1' will disable the corresponding interrupt. Reading this register will readback enable status

PMIC_CLR_MASK=INT_EN_SET

LDO9_INT_EN_CLR

Bits	Name	Description
0	VREG_OK_EN_CLR	0x1: VREG_OK_ERROR_ENABLED 0x0: VREG_OK_ERROR_DISABLED

0x00014818 LDO9_INT_LATCHED_STS

Type: R
Clock: PBUS_WRCLK
Reset State: 0x00
Reset Name: n/a

Latched (Sticky) Interrupt. '1' indicates that the interrupt has triggered. Once the latched bit is set it can only be cleared by writing the clear bit.

LDO9_INT_LATCHED_STS

Bits	Name	Description
0	VREG_OK_LATCHED_STS	Regulator has been successfully enabled 0x1: LDO_VOLTAGE_LOW 0x0: LDO_VOLTAGE_OK

0x00014819 LDO9_INT_PENDING_STS

Type: R
Clock: PBUS_WRCLK
Reset State: 0x00
Reset Name: n/a

Debug: Pending is set if interrupt has been sent but not cleared.

LDO9_INT_PENDING_STS

Bits	Name	Description
0	VREG_OK_PENDING_STS	Regulator has been successfully enabled 0x1: LDO_ENABLE_SUCCESS 0x0: LDO_ENABLE_FALSE

0x0001481A LDO9_INT_MID_SEL

Type: RW
Clock: PBUS_WRCLK
Reset State: 0x00
Reset Name: perph_rb

Selects the MID that will receive the interrupt

LDO9_INT_MID_SEL

Bits	Name	Description
1:0	INT_MID_SEL	0x1: INT_MID_SEL_1 0x0: INT_MID_SEL_0

0x0001481B LDO9_INT_PRIORITY

Type: RW
Clock: PBUS_WRCLK
Reset State: 0x00
Reset Name: perph_rb

LDO9_INT_PRIORITY

Bits	Name	Description
0	INT_PRIORITY	0x1: INT_PRIORITY_A 0x0: INT_PRIORITY_SR

0x00014841 LDO9_VOLTAGE_CTL2

Type: RW
Clock: PBUS_WRCLK
Reset State: 0x7C
Reset Name: perph_rb

LDO9_VOLTAGE_CTL2

Bits	Name	Description
6:0	VSET	Voltage = Vmin + VSET*(Vstep)

0x00014845 LDO9_MODE_CTL2

Type: RW
Clock: PBUS_WRCLK
Reset State: 0x80
Reset Name: perph_rb

Define LDO Mode Transitions

LDO9_MODE_CTL2

Bits	Name	Description
7	NPM	Force NPM 0x1: FORCED_NPM 0x0: FORCED_NPM_FALSE
6	BYPASS_ACT	0x1: BYPASS_ACT_TRUE 0x0: BYPASS_ACT_FALSE
5	BYPASS_EN	Enable LDO bypass mode 0x1: BYPASS_ENABLED 0x0: BYPASS_DISABLED

LDO9_MODE_CTL2 (cont.)

Bits	Name	Description
4	FOLLOW_PMIC_AWAKE	NPM when PMIC_AWAKE (SLEEP_B) 0x1: FOLLOW_PMIC_AWAKE_TRUE 0x0: FOLLOW_PMIC_AWAKE_FALSE

0x00014846 LDO9_EN_CTL

Type: RW
Clock: PBUS_WRCLK
Reset State: 0x00
Reset Name: perph_rb

LDO9_EN_CTL

Bits	Name	Description
7	EN_LDO_INT	1' = Enable the LDO, '0' = do not force LDO on 0x1: EN_LDO_INT_TRUE 0x0: EN_LDO_INT_FALSE

0x00014848 LDO9_PD_CTL

Type: RW
Clock: PBUS_WRCLK
Reset State: 0x80
Reset Name: perph_rb

LDO9_PD_CTL

Bits	Name	Description
7	PULLDN_EN	Enable the pulldown when the regulator is disabled 0x1: PULLDN_ENABLED 0x0: PULLDN_DIABLED

0x0001484C LDO9_SOFT_START_CTL

Type: RW
Clock: PBUS_WRCLK
Reset State: 0x80
Reset Name: perph_rb

LDO9_SOFT_START_CTL

Bits	Name	Description
7	SOFT_START	0x1: SOFT_START_ENABLED 0x0: SOFT_START_DISABLED

0x00014852 LDO9_CONFIG_CTL

Type: RW
Clock: PBUS_WRCLK
Reset State: 0x04
Reset Name: perph_rb

LDO9_CONFIG_CTL

Bits	Name	Description
3	ACT_BYPASS_BUFF_EN	0x1: ACT_BYPASS_BUFF_ENABLED 0x0: ACT_BYPASS_BUFF_DISABLED
2	MODE_TRAN_ENH_EN	PMOS LDO only, when set high, the internal nodes in the error amp are short circuited during NPM?LPM transition 0x1: MODE_TRAN_ENH_ENABLED 0x0: MODE_TRAN_ENH_DISABLED

62 LDO10

0x00014900 - 0x00014903 RESERVED

0x00014904 LDO10_PERPH_TYPE

Type: R
Clock: PBUS_WRCLK
Reset State: 0x21
Reset Name: n/a

Peripheral Type

PMIC_CONSTANT

LDO10_PERPH_TYPE

Bits	Name	Description
7:0	TYPE	LDO

0x00014908 LDO10_STATUS1

Type: R
Clock: PBUS_WRCLK
Reset State: 0x00000000
Reset Name: n/a

Status Registers

LDO10_STATUS1

Bits	Name	Description
7	VREG_OK	DEF: X VREG output voltage level. VREG_OK is always high when LDO is in bypass mode 0x1: LDO_VOLTAGE_OK 0x0: LDO_VOLTAGE_LOW

LDO10_STATUS1 (cont.)

Bits	Name	Description
2	BYPASS_LDO	DEF: X LDO is ON and in bypass mode 0x1: ON_AND_BYPASSED 0x0: OFF_OR_NON_BYPASS
1	NPM_TRUE	DEF: X VREG_OK and LDO is in NPM 0x1: NPM_VOLTAGE_OK 0x0: NOT_NPM_OR_VOLTAGE_NOT_OK

0x00014909 LDO10_STATUS2

Type: R
Clock: PBUS_WRCLK
Reset State: 0x00
Reset Name: n/a

Status Registers

LDO10_STATUS2

Bits	Name	Description
7	SOFTSTART_DONE	indicates that the startup is complete LDO in normal mode 0x1: SOFTSTART_DONE 0x0: SOFTSTART_NOT_DONE
5	VREG_ON	indicate whether the regulator is on 0x1: LDO_ON 0x0: LDO_OFF

0x00014910 LDO10_INT_RT_STS

Type: R
Clock: PBUS_WRCLK
Reset State: 0x00
Reset Name: n/a

Interrupt Real Time Status Bits

LDO10_INT_RT_STS

Bits	Name	Description
0	VREG_OK_RT_STS	Regulator has been successfully enabled 0x1: LDO_ENABLE_SUCCESS 0x0: LDO_ENABLE_ERR

0x00014911 LDO10_INT_SET_TYPE

Type: R
Clock: PBUS_WRCLK
Reset State: 0x00
Reset Name: n/a

LDO10_INT_SET_TYPE

Bits	Name	Description
0	VREG_OK_TYPE	Interrupt type, edge or level 0x1: VREG_OK_LEVEL_TRIGGERED 0x0: VREG_OK_EDGE_TRIGGERED

0x00014912 LDO10_INT_POLARITY_HIGH

Type: RW
Clock: PBUS_WRCLK
Reset State: 0x00
Reset Name: perph_rb

LDO10_INT_POLARITY_HIGH

Bits	Name	Description
0	VREG_OK_HIGH	Edge type, rising or Level type, high true 0x1: VREG_OK_LOW_TRIGGERED 0x0: VREG_OK_LOW_DISABLED

0x00014913 LDO10_INT_POLARITY_LOW

Type: R
Clock: PBUS_WRCLK
Reset State: 0x00
Reset Name: n/a

LDO10_INT_POLARITY_LOW

Bits	Name	Description
0	VREG_OK_LOW	Edge type, falling or Level type, low true 0x1: VREG_OK_RISING_TRIGGERED 0x0: VREG_OK_FALLING_TRIGGERED

0x00014914 LDO10_INT_LATCHED_CLR

Type: W
Clock: PBUS_WRCLK
Reset State: 0x00
Reset Name: perph_rb

writing a '1' to this interrupt will rearm the interrupt when an interrupt is pending. It clears the internal sticky and sent bits

LDO10_INT_LATCHED_CLR

Bits	Name	Description
0	VREG_OK_LATCHED_CLR	0x1: VREG_OK_ERROR_REARM 0x0: VREG_OK_ERROR_NOT_REARM

0x00014915 LDO10_INT_EN_SET

Type: RW
Clock: PBUS_WRCLK
Reset State: 0x00
Reset Name: perph_rb

writing '0' to this register has no effect. Writing a '1' will enable the corresponding interrupt. Reading this register will readback enable status

PMIC_SET_MASK

LDO10_INT_EN_SET

Bits	Name	Description
0	VREG_OK_EN_SET	0x1: VREG_OK_ERROR_ENABLED 0x0: VREG_OK_ERROR_DISABLED

0x00014916 LDO10_INT_EN_CLR

Type: RW
Clock: PBUS_WRCLK
Reset State: 0x00
Reset Name: perph_rb

writing '0' to this register has no effect. Writing a '1' will disable the corresponding interrupt. Reading this register will readback enable status

PMIC_CLR_MASK=INT_EN_SET

LDO10_INT_EN_CLR

Bits	Name	Description
0	VREG_OK_EN_CLR	0x1: VREG_OK_ERROR_ENABLED 0x0: VREG_OK_ERROR_DISABLED

0x00014918 LDO10_INT_LATCHED_STS

Type: R
Clock: PBUS_WRCLK
Reset State: 0x00
Reset Name: n/a

Latched (Sticky) Interrupt. '1' indicates that the interrupt has triggered. Once the latched bit is set it can only be cleared by writing the clear bit.

LDO10_INT_LATCHED_STS

Bits	Name	Description
0	VREG_OK_LATCHED_STS	Regulator has been successfully enabled 0x1: LDO_VOLTAGE_LOW 0x0: LDO_VOLTAGE_OK

0x00014919 LDO10_INT_PENDING_STS

Type: R
Clock: PBUS_WRCLK
Reset State: 0x00
Reset Name: n/a

Debug: Pending is set if interrupt has been sent but not cleared.

LDO10_INT_PENDING_STS

Bits	Name	Description
0	VREG_OK_PENDING_STS	Regulator has been successfully enabled 0x1: LDO_ENABLE_SUCCESS 0x0: LDO_ENABLE_FALSE

0x0001491A LDO10_INT_MID_SEL

Type: RW
Clock: PBUS_WRCLK
Reset State: 0x00
Reset Name: perph_rb

Selects the MID that will receive the interrupt

LDO10_INT_MID_SEL

Bits	Name	Description
1:0	INT_MID_SEL	0x1: INT_MID_SEL_1 0x0: INT_MID_SEL_0

0x0001491B LDO10_INT_PRIORITY

Type: RW
Clock: PBUS_WRCLK
Reset State: 0x00
Reset Name: perph_rb

LDO10_INT_PRIORITY

Bits	Name	Description
0	INT_PRIORITY	0x1: INT_PRIORITY_A 0x0: INT_PRIORITY_SR

0x00014941 LDO10_VOLTAGE_CTL2

Type: RW
Clock: PBUS_WRCLK
Reset State: 0x54
Reset Name: perph_rb

LDO10_VOLTAGE_CTL2

Bits	Name	Description
6:0	VSET	Voltage = Vmin + VSET*(Vstep)

0x00014945 LDO10_MODE_CTL2

Type: RW
Clock: PBUS_WRCLK
Reset State: 0x80
Reset Name: perph_rb

Define LDO Mode Transitions

LDO10_MODE_CTL2

Bits	Name	Description
7	NPM	Force NPM 0x1: FORCED_NPM 0x0: FORCED_NPM_FALSE
6	BYPASS_ACT	0x1: BYPASS_ACT_TRUE 0x0: BYPASS_ACT_FALSE
5	BYPASS_EN	Enable LDO bypass mode 0x1: BYPASS_ENABLED 0x0: BYPASS_DISABLED
4	FOLLOW_PMIC_AWAKE	NPM when PMIC_AWAKE (SLEEP_B) 0x1: FOLLOW_PMIC_AWAKE_TRUE 0x0: FOLLOW_PMIC_AWAKE_FALSE

0x00014946 LDO10_EN_CTL

Type: RW
Clock: PBUS_WRCLK
Reset State: 0x00
Reset Name: perph_rb

LDO10_EN_CTL

Bits	Name	Description
7	EN_LDO_INT	1' = Enable the LDO, '0' = do not force LDO on 0x1: EN_LDO_INT_TRUE 0x0: EN_LDO_INT_FALSE

0x00014948 LDO10_PD_CTL

Type: RW
Clock: PBUS_WRCLK
Reset State: 0x80
Reset Name: perph_rb

LDO10_PD_CTL

Bits	Name	Description
7	PULLDN_EN	Enable the pulldown when the regulator is disabled 0x1: PULLDN_ENABLED 0x0: PULLDN_DIABLED

0x0001494C LDO10_SOFT_START_CTL

Type: RW
Clock: PBUS_WRCLK
Reset State: 0x80
Reset Name: perph_rb

LDO10_SOFT_START_CTL

Bits	Name	Description
7	SOFT_START	0x1: SOFT_START_ENABLED 0x0: SOFT_START_DISABLED

0x00014952 LDO10_CONFIG_CTL

Type: RW
Clock: PBUS_WRCLK
Reset State: 0x04
Reset Name: perph_rb

LDO10_CONFIG_CTL

Bits	Name	Description
3	ACT_BYPASS_BUFF_EN	0x1: ACT_BYPASS_BUFF_ENABLED 0x0: ACT_BYPASS_BUFF_DISABLED
2	MODE_TRAN_ENH_EN	PMOS LDO only, when set high, the internal nodes in the error amp are short circuited during NPM?LPM transition 0x1: MODE_TRAN_ENH_ENABLED 0x0: MODE_TRAN_ENH_DISABLED

63 LDO11

0x00014A00 - RESERVED
0x00014A03

0x00014A04 LDO11_PERPH_TYPE

Type: R
Clock: PBUS_WRCLK
Reset State: 0x21
Reset Name: n/a

Peripheral Type

PMIC_CONSTANT

LDO11_PERPH_TYPE

Bits	Name	Description
7:0	TYPE	LDO

0x00014A08 LDO11_STATUS1

Type: R
Clock: PBUS_WRCLK
Reset State: 0x00000000
Reset Name: n/a

Status Registers

LDO11_STATUS1

Bits	Name	Description
7	VREG_OK	DEF: X VREG output voltage level. VREG_OK is always high when LDO is in bypass mode 0x1: LDO_VOLTAGE_OK 0x0: LDO_VOLTAGE_LOW

LDO11_STATUS1 (cont.)

Bits	Name	Description
2	BYPASS_LDO	DEF: X LDO is ON and in bypass mode 0x1: ON_AND_BYPASSED 0x0: OFF_OR_NON_BYPASS
1	NPM_TRUE	DEF: X VREG_OK and LDO is in NPM 0x1: NPM_VOLTAGE_OK 0x0: NOT_NPM_OR_VOLTAGE_NOT_OK

0x00014A09 LDO11_STATUS2

Type: R
Clock: PBUS_WRCLK
Reset State: 0x00
Reset Name: n/a

Status Registers

LDO11_STATUS2

Bits	Name	Description
7	SOFTSTART_DONE	indicates that the startup is complete LDO in normal mode 0x1: SOFTSTART_DONE 0x0: SOFTSTART_NOT_DONE
5	VREG_ON	indicate whether the regulator is on 0x1: LDO_ON 0x0: LDO_OFF

0x00014A10 LDO11_INT_RT_STS

Type: R
Clock: PBUS_WRCLK
Reset State: 0x00
Reset Name: n/a

Interrupt Real Time Status Bits

LDO11_INT_RT_STS

Bits	Name	Description
0	VREG_OK_RT_STS	Regulator has been successfully enabled 0x1: LDO_ENABLE_SUCCESS 0x0: LDO_ENABLE_ERR

0x00014A11 LDO11_INT_SET_TYPE

Type: R
Clock: PBUS_WRCLK
Reset State: 0x00
Reset Name: n/a

LDO11_INT_SET_TYPE

Bits	Name	Description
0	VREG_OK_TYPE	Interrupt type, edge or level 0x1: VREG_OK_LEVEL_TRIGGERED 0x0: VREG_OK_EDGE_TRIGGERED

0x00014A12 LDO11_INT_POLARITY_HIGH

Type: RW
Clock: PBUS_WRCLK
Reset State: 0x00
Reset Name: perph_rb

LDO11_INT_POLARITY_HIGH

Bits	Name	Description
0	VREG_OK_HIGH	Edge type, rising or Level type, high true 0x1: VREG_OK_LOW_TRIGGERED 0x0: VREG_OK_LOW_DISABLED

0x00014A13 LDO11_INT_POLARITY_LOW

Type: R
Clock: PBUS_WRCLK
Reset State: 0x00
Reset Name: n/a

LDO11_INT_POLARITY_LOW

Bits	Name	Description
0	VREG_OK_LOW	Edge type, falling or Level type, low true 0x1: VREG_OK_RISING_TRIGGERED 0x0: VREG_OK_FALLING_TRIGGERED

0x00014A14 LDO11_INT_LATCHED_CLR

Type: W
Clock: PBUS_WRCLK
Reset State: 0x00
Reset Name: perph_rb

writing a '1' to this interrupt will rearm the interrupt when an interrupt is pending. It clears the internal sticky and sent bits

LDO11_INT_LATCHED_CLR

Bits	Name	Description
0	VREG_OK_LATCHED_CLR	0x1: VREG_OK_ERROR_REARM 0x0: VREG_OK_ERROR_NOT_REARM

0x00014A15 LDO11_INT_EN_SET

Type: RW
Clock: PBUS_WRCLK
Reset State: 0x00
Reset Name: perph_rb

writing '0' to this register has no effect. Writing a '1' will enable the corresponding interrupt. Reading this register will readback enable status

PMIC_SET_MASK

LDO11_INT_EN_SET

Bits	Name	Description
0	VREG_OK_EN_SET	0x1: VREG_OK_ERROR_ENABLED 0x0: VREG_OK_ERROR_DISABLED

0x00014A16 LDO11_INT_EN_CLR

Type: RW
Clock: PBUS_WRCLK
Reset State: 0x00
Reset Name: perph_rb

writing '0' to this register has no effect. Writing a '1' will disable the corresponding interrupt. Reading this register will readback enable status

PMIC_CLR_MASK=INT_EN_SET

LDO11_INT_EN_CLR

Bits	Name	Description
0	VREG_OK_EN_CLR	0x1: VREG_OK_ERROR_ENABLED 0x0: VREG_OK_ERROR_DISABLED

0x00014A18 LDO11_INT_LATCHED_STS

Type: R
Clock: PBUS_WRCLK
Reset State: 0x00
Reset Name: n/a

Latched (Sticky) Interrupt. '1' indicates that the interrupt has triggered. Once the latched bit is set it can only be cleared by writing the clear bit.

LDO11_INT_LATCHED_STS

Bits	Name	Description
0	VREG_OK_LATCHED_STS	Regulator has been successfully enabled 0x1: LDO_VOLTAGE_LOW 0x0: LDO_VOLTAGE_OK

0x00014A19 LDO11_INT_PENDING_STS

Type: R
Clock: PBUS_WRCLK
Reset State: 0x00
Reset Name: n/a

Debug: Pending is set if interrupt has been sent but not cleared.

LDO11_INT_PENDING_STS

Bits	Name	Description
0	VREG_OK_PENDING_STS	Regulator has been successfully enabled 0x1: LDO_ENABLE_SUCCESS 0x0: LDO_ENABLE_FALSE

0x00014A1A LDO11_INT_MID_SEL

Type: RW
Clock: PBUS_WRCLK
Reset State: 0x00
Reset Name: perph_rb

Selects the MID that will receive the interrupt

LDO11_INT_MID_SEL

Bits	Name	Description
1:0	INT_MID_SEL	0x1: INT_MID_SEL_1 0x0: INT_MID_SEL_0

0x00014A1B LDO11_INT_PRIORITY

Type: RW
Clock: PBUS_WRCLK
Reset State: 0x00
Reset Name: perph_rb

LDO11_INT_PRIORITY

Bits	Name	Description
0	INT_PRIORITY	0x1: INT_PRIORITY_A 0x0: INT_PRIORITY_SR

0x00014A41 LDO11_VOLTAGE_CTL2

Type: RW
Clock: PBUS_WRCLK
Reset State: 0x60
Reset Name: perph_rb

LDO11_VOLTAGE_CTL2

Bits	Name	Description
6:0	VSET	Voltage = Vmin + VSET*(Vstep)

0x00014A45 LDO11_MODE_CTL2

Type: RW
Clock: PBUS_WRCLK
Reset State: 0x80
Reset Name: perph_rb

Define LDO Mode Transitions

LDO11_MODE_CTL2

Bits	Name	Description
7	NPM	Force NPM 0x1: FORCED_NPM 0x0: FORCED_NPM_FALSE
6	BYPASS_ACT	0x1: BYPASS_ACT_TRUE 0x0: BYPASS_ACT_FALSE
5	BYPASS_EN	Enable LDO bypass mode 0x1: BYPASS_ENABLED 0x0: BYPASS_DISABLED
4	FOLLOW_PMIC_AWAKE	NPM when PMIC_AWAKE (SLEEP_B) 0x1: FOLLOW_PMIC_AWAKE_TRUE 0x0: FOLLOW_PMIC_AWAKE_FALSE

0x00014A46 LDO11_EN_CTL

Type: RW
Clock: PBUS_WRCLK
Reset State: 0x00
Reset Name: perph_rb

LDO11_EN_CTL

Bits	Name	Description
7	EN_LDO_INT	1' = Enable the LDO, '0' = do not force LDO on 0x1: EN_LDO_INT_TRUE 0x0: EN_LDO_INT_FALSE

0x00014A48 LDO11_PD_CTL

Type: RW
Clock: PBUS_WRCLK
Reset State: 0x80
Reset Name: perph_rb

LDO11_PD_CTL

Bits	Name	Description
7	PULLDN_EN	Enable the pulldown when the regulator is disabled 0x1: PULLDN_ENABLED 0x0: PULLDN_DIABLED

0x00014A4C LDO11_SOFT_START_CTL

Type: RW
Clock: PBUS_WRCLK
Reset State: 0x80
Reset Name: perph_rb

LDO11_SOFT_START_CTL

Bits	Name	Description
7	SOFT_START	0x1: SOFT_START_ENABLED 0x0: SOFT_START_DISABLED

0x00014A52 LDO11_CONFIG_CTL

Type: RW
Clock: PBUS_WRCLK
Reset State: 0x04
Reset Name: perph_rb

LDO11_CONFIG_CTL

Bits	Name	Description
3	ACT_BYPASS_BUFF_EN	0x1: ACT_BYPASS_BUFF_ENABLED 0x0: ACT_BYPASS_BUFF_DISABLED
2	MODE_TRAN_ENH_EN	PMOS LDO only, when set high, the internal nodes in the error amp are short circuited during NPM?LPM transition 0x1: MODE_TRAN_ENH_ENABLED 0x0: MODE_TRAN_ENH_DISABLED

64 LDO12

0x00014B00 - RESERVED
0x00014B03

0x00014B04 LDO12_PERPH_TYPE

Type: R
Clock: PBUS_WRCLK
Reset State: 0x21
Reset Name: n/a

Peripheral Type

PMIC_CONSTANT

LDO12_PERPH_TYPE

Bits	Name	Description
7:0	TYPE	LDO

0x00014B08 LDO12_STATUS1

Type: R
Clock: PBUS_WRCLK
Reset State: 0x00000000
Reset Name: n/a

Status Registers

LDO12_STATUS1

Bits	Name	Description
7	VREG_OK	DEF: X VREG output voltage level. VREG_OK is always high when LDO is in bypass mode 0x1: LDO_VOLTAGE_OK 0x0: LDO_VOLTAGE_LOW

LDO12_STATUS1 (cont.)

Bits	Name	Description
2	BYPASS_LDO	DEF: X LDO is ON and in bypass mode 0x1: ON_AND_BYPASSED 0x0: OFF_OR_NON_BYPASS
1	NPM_TRUE	DEF: X VREG_OK and LDO is in NPM 0x1: NPM_VOLTAGE_OK 0x0: NOT_NPM_OR_VOLTAGE_NOT_OK

0x00014B09 LDO12_STATUS2

Type: R
Clock: PBUS_WRCLK
Reset State: 0x00
Reset Name: n/a

Status Registers

LDO12_STATUS2

Bits	Name	Description
7	SOFTSTART_DONE	indicates that the startup is complete LDO in normal mode 0x1: SOFTSTART_DONE 0x0: SOFTSTART_NOT_DONE
5	VREG_ON	indicate whether the regulator is on 0x1: LDO_ON 0x0: LDO_OFF

0x00014B10 LDO12_INT_RT_STS

Type: R
Clock: PBUS_WRCLK
Reset State: 0x00
Reset Name: n/a

Interrupt Real Time Status Bits

LDO12_INT_RT_STS

Bits	Name	Description
0	VREG_OK_RT_STS	Regulator has been successfully enabled 0x1: LDO_ENABLE_SUCCESS 0x0: LDO_ENABLE_ERR

0x00014B11 LDO12_INT_SET_TYPE

Type: R
Clock: PBUS_WRCLK
Reset State: 0x00
Reset Name: n/a

LDO12_INT_SET_TYPE

Bits	Name	Description
0	VREG_OK_TYPE	Interrupt type, edge or level 0x1: VREG_OK_LEVEL_TRIGGERED 0x0: VREG_OK_EDGE_TRIGGERED

0x00014B12 LDO12_INT_POLARITY_HIGH

Type: RW
Clock: PBUS_WRCLK
Reset State: 0x00
Reset Name: perph_rb

LDO12_INT_POLARITY_HIGH

Bits	Name	Description
0	VREG_OK_HIGH	Edge type, rising or Level type, high true 0x1: VREG_OK_LOW_TRIGGERED 0x0: VREG_OK_LOW_DISABLED

0x00014B13 LDO12_INT_POLARITY_LOW

Type: R
Clock: PBUS_WRCLK
Reset State: 0x00
Reset Name: n/a

LDO12_INT_POLARITY_LOW

Bits	Name	Description
0	VREG_OK_LOW	Edge type, falling or Level type, low true 0x1: VREG_OK_RISING_TRIGGERED 0x0: VREG_OK_FALLING_TRIGGERED

0x00014B14 LDO12_INT_LATCHED_CLR

Type: W
Clock: PBUS_WRCLK
Reset State: 0x00
Reset Name: perph_rb

writing a '1' to this interrupt will rearm the interrupt when an interrupt is pending. It clears the internal sticky and sent bits

LDO12_INT_LATCHED_CLR

Bits	Name	Description
0	VREG_OK_LATCHED_CLR	0x1: VREG_OK_ERROR_REARM 0x0: VREG_OK_ERROR_NOT_REARM

0x00014B15 LDO12_INT_EN_SET

Type: RW
Clock: PBUS_WRCLK
Reset State: 0x00
Reset Name: perph_rb

writing '0' to this register has no effect. Writing a '1' will enable the corresponding interrupt. Reading this register will readback enable status

PMIC_SET_MASK

LDO12_INT_EN_SET

Bits	Name	Description
0	VREG_OK_EN_SET	0x1: VREG_OK_ERROR_ENABLED 0x0: VREG_OK_ERROR_DISABLED

0x00014B16 LDO12_INT_EN_CLR

Type: RW
Clock: PBUS_WRCLK
Reset State: 0x00
Reset Name: perph_rb

writing '0' to this register has no effect. Writing a '1' will disable the corresponding interrupt. Reading this register will readback enable status

PMIC_CLR_MASK=INT_EN_SET

LDO12_INT_EN_CLR

Bits	Name	Description
0	VREG_OK_EN_CLR	0x1: VREG_OK_ERROR_ENABLED 0x0: VREG_OK_ERROR_DISABLED

0x00014B18 LDO12_INT_LATCHED_STS

Type: R
Clock: PBUS_WRCLK
Reset State: 0x00
Reset Name: n/a

Latched (Sticky) Interrupt. '1' indicates that the interrupt has triggered. Once the latched bit is set it can only be cleared by writing the clear bit.

LDO12_INT_LATCHED_STS

Bits	Name	Description
0	VREG_OK_LATCHED_STS	Regulator has been successfully enabled 0x1: LDO_VOLTAGE_LOW 0x0: LDO_VOLTAGE_OK

0x00014B19 LDO12_INT_PENDING_STS

Type: R
Clock: PBUS_WRCLK
Reset State: 0x00
Reset Name: n/a

Debug: Pending is set if interrupt has been sent but not cleared.

LDO12_INT_PENDING_STS

Bits	Name	Description
0	VREG_OK_PENDING_STS	Regulator has been successfully enabled 0x1: LDO_ENABLE_SUCCESS 0x0: LDO_ENABLE_FALSE

0x00014B1A LDO12_INT_MID_SEL

Type: RW
Clock: PBUS_WRCLK
Reset State: 0x00
Reset Name: perph_rb

Selects the MID that will receive the interrupt

LDO12_INT_MID_SEL

Bits	Name	Description
1:0	INT_MID_SEL	0x1: INT_MID_SEL_1 0x0: INT_MID_SEL_0

0x00014B1B LDO12_INT_PRIORITY

Type: RW
Clock: PBUS_WRCLK
Reset State: 0x00
Reset Name: perph_rb

LDO12_INT_PRIORITY

Bits	Name	Description
0	INT_PRIORITY	0x1: INT_PRIORITY_A 0x0: INT_PRIORITY_SR

0x00014B41 LDO12_VOLTAGE_CTL2

Type: RW
Clock: PBUS_WRCLK
Reset State: 0x60
Reset Name: perph_rb

LDO12_VOLTAGE_CTL2

Bits	Name	Description
6:0	VSET	Voltage = Vmin + VSET*(Vstep)

0x00014B45 LDO12_MODE_CTL2

Type: RW
Clock: PBUS_WRCLK
Reset State: 0x80
Reset Name: perph_rb

Define LDO Mode Transitions

LDO12_MODE_CTL2

Bits	Name	Description
7	NPM	Force NPM 0x1: FORCED_NPM 0x0: FORCED_NPM_FALSE
6	BYPASS_ACT	0x1: BYPASS_ACT_TRUE 0x0: BYPASS_ACT_FALSE
5	BYPASS_EN	Enable LDO bypass mode 0x1: BYPASS_ENABLED 0x0: BYPASS_DISABLED
4	FOLLOW_PMIC_AWAKE	NPM when PMIC_AWAKE (SLEEP_B) 0x1: FOLLOW_PMIC_AWAKE_TRUE 0x0: FOLLOW_PMIC_AWAKE_FALSE

0x00014B46 LDO12_EN_CTL

Type: RW
Clock: PBUS_WRCLK
Reset State: 0x00
Reset Name: perph_rb

LDO12_EN_CTL

Bits	Name	Description
7	EN_LDO_INT	1' = Enable the LDO, '0' = do not force LDO on 0x1: EN_LDO_INT_TRUE 0x0: EN_LDO_INT_FALSE

0x00014B48 LDO12_PD_CTL

Type: RW
Clock: PBUS_WRCLK
Reset State: 0x80
Reset Name: perph_rb

LDO12_PD_CTL

Bits	Name	Description
7	PULLDN_EN	Enable the pulldown when the regulator is disabled 0x1: PULLDN_ENABLED 0x0: PULLDN_DIABLED

0x00014B4C LDO12_SOFT_START_CTL

Type: RW
Clock: PBUS_WRCLK
Reset State: 0x80
Reset Name: perph_rb

LDO12_SOFT_START_CTL

Bits	Name	Description
7	SOFT_START	0x1: SOFT_START_ENABLED 0x0: SOFT_START_DISABLED

0x00014B52 LDO12_CONFIG_CTL

Type: RW
Clock: PBUS_WRCLK
Reset State: 0x04
Reset Name: perph_rb

LDO12_CONFIG_CTL

Bits	Name	Description
3	ACT_BYPASS_BUFF_EN	0x1: ACT_BYPASS_BUFF_ENABLED 0x0: ACT_BYPASS_BUFF_DISABLED
2	MODE_TRAN_ENH_EN	PMOS LDO only, when set high, the internal nodes in the error amp are short circuited during NPM?LPM transition 0x1: MODE_TRAN_ENH_ENABLED 0x0: MODE_TRAN_ENH_DISABLED

65 LDO13

0x00014C00 - RESERVED
0x00014C03

0x00014C04 LDO13_PERPH_TYPE

Type: R
Clock: PBUS_WRCLK
Reset State: 0x21
Reset Name: n/a

Peripheral Type

PMIC_CONSTANT

LDO13_PERPH_TYPE

Bits	Name	Description
7:0	TYPE	LDO

0x00014C08 LDO13_STATUS1

Type: R
Clock: PBUS_WRCLK
Reset State: 0x00000000
Reset Name: n/a

Status Registers

LDO13_STATUS1

Bits	Name	Description
7	VREG_OK	DEF: X VREG output voltage level. VREG_OK is always high when LDO is in bypass mode 0x1: LDO_VOLTAGE_OK 0x0: LDO_VOLTAGE_LOW

LDO13_STATUS1 (cont.)

Bits	Name	Description
2	BYPASS_LDO	DEF: X LDO is ON and in bypass mode 0x1: ON_AND_BYPASSED 0x0: OFF_OR_NON_BYPASS
1	NPM_TRUE	DEF: X VREG_OK and LDO is in NPM 0x1: NPM_VOLTAGE_OK 0x0: NOT_NPM_OR_VOLTAGE_NOT_OK

0x00014C09 LDO13_STATUS2

Type: R
Clock: PBUS_WRCLK
Reset State: 0x00
Reset Name: n/a

Status Registers

LDO13_STATUS2

Bits	Name	Description
7	SOFTSTART_DONE	indicates that the startup is complete LDO in normal mode 0x1: SOFTSTART_DONE 0x0: SOFTSTART_NOT_DONE
5	VREG_ON	indicate whether the regulator is on 0x1: LDO_ON 0x0: LDO_OFF

0x00014C10 LDO13_INT_RT_STS

Type: R
Clock: PBUS_WRCLK
Reset State: 0x00
Reset Name: n/a

Interrupt Real Time Status Bits

LDO13_INT_RT_STS

Bits	Name	Description
0	VREG_OK_RT_STS	Regulator has been successfully enabled 0x1: LDO_ENABLE_SUCCESS 0x0: LDO_ENABLE_ERR

0x00014C11 LDO13_INT_SET_TYPE

Type: R
Clock: PBUS_WRCLK
Reset State: 0x00
Reset Name: n/a

LDO13_INT_SET_TYPE

Bits	Name	Description
0	VREG_OK_TYPE	Interrupt type, edge or level 0x1: VREG_OK_LEVEL_TRIGGERED 0x0: VREG_OK_EDGE_TRIGGERED

0x00014C12 LDO13_INT_POLARITY_HIGH

Type: RW
Clock: PBUS_WRCLK
Reset State: 0x00
Reset Name: perph_rb

LDO13_INT_POLARITY_HIGH

Bits	Name	Description
0	VREG_OK_HIGH	Edge type, rising or Level type, high true 0x1: VREG_OK_LOW_TRIGGERED 0x0: VREG_OK_LOW_DISABLED

0x00014C13 LDO13_INT_POLARITY_LOW

Type: R
Clock: PBUS_WRCLK
Reset State: 0x00
Reset Name: n/a

LDO13_INT_POLARITY_LOW

Bits	Name	Description
0	VREG_OK_LOW	Edge type, falling or Level type, low true 0x1: VREG_OK_RISING_TRIGGERED 0x0: VREG_OK_FALLING_TRIGGERED

0x00014C14 LDO13_INT_LATCHED_CLR

Type: W
Clock: PBUS_WRCLK
Reset State: 0x00
Reset Name: perph_rb

writing a '1' to this interrupt will rearm the interrupt when an interrupt is pending. It clears the internal sticky and sent bits

LDO13_INT_LATCHED_CLR

Bits	Name	Description
0	VREG_OK_LATCHED_CLR	0x1: VREG_OK_ERROR_REARM 0x0: VREG_OK_ERROR_NOT_REARM

0x00014C15 LDO13_INT_EN_SET

Type: RW
Clock: PBUS_WRCLK
Reset State: 0x00
Reset Name: perph_rb

writing '0' to this register has no effect. Writing a '1' will enable the corresponding interrupt. Reading this register will readback enable status

PMIC_SET_MASK

LDO13_INT_EN_SET

Bits	Name	Description
0	VREG_OK_EN_SET	0x1: VREG_OK_ERROR_ENABLED 0x0: VREG_OK_ERROR_DISABLED

0x00014C16 LDO13_INT_EN_CLR

Type: RW
Clock: PBUS_WRCLK
Reset State: 0x00
Reset Name: perph_rb

writing '0' to this register has no effect. Writing a '1' will disable the corresponding interrupt. Reading this register will readback enable status

PMIC_CLR_MASK=INT_EN_SET

LDO13_INT_EN_CLR

Bits	Name	Description
0	VREG_OK_EN_CLR	0x1: VREG_OK_ERROR_ENABLED 0x0: VREG_OK_ERROR_DISABLED

0x00014C18 LDO13_INT_LATCHED_STS

Type: R
Clock: PBUS_WRCLK
Reset State: 0x00
Reset Name: n/a

Latched (Sticky) Interrupt. '1' indicates that the interrupt has triggered. Once the latched bit is set it can only be cleared by writing the clear bit.

LDO13_INT_LATCHED_STS

Bits	Name	Description
0	VREG_OK_LATCHED_STS	Regulator has been successfully enabled 0x1: LDO_VOLTAGE_LOW 0x0: LDO_VOLTAGE_OK

0x00014C19 LDO13_INT_PENDING_STS

Type: R
Clock: PBUS_WRCLK
Reset State: 0x00
Reset Name: n/a

Debug: Pending is set if interrupt has been sent but not cleared.

LDO13_INT_PENDING_STS

Bits	Name	Description
0	VREG_OK_PENDING_STS	Regulator has been successfully enabled 0x1: LDO_ENABLE_SUCCESS 0x0: LDO_ENABLE_FALSE

0x00014C1A LDO13_INT_MID_SEL

Type: RW
Clock: PBUS_WRCLK
Reset State: 0x00
Reset Name: perph_rb

Selects the MID that will receive the interrupt

LDO13_INT_MID_SEL

Bits	Name	Description
1:0	INT_MID_SEL	0x1: INT_MID_SEL_1 0x0: INT_MID_SEL_0

0x00014C1B LDO13_INT_PRIORITY

Type: RW
Clock: PBUS_WRCLK
Reset State: 0x00
Reset Name: perph_rb

LDO13_INT_PRIORITY

Bits	Name	Description
0	INT_PRIORITY	0x1: INT_PRIORITY_A 0x0: INT_PRIORITY_SR

0x00014C41 LDO13_VOLTAGE_CTL2

Type: RW
Clock: PBUS_WRCLK
Reset State: 0x6A
Reset Name: perph_rb

LDO13_VOLTAGE_CTL2

Bits	Name	Description
6:0	VSET	Voltage = Vmin + VSET*(Vstep)

0x00014C45 LDO13_MODE_CTL2

Type: RW
Clock: PBUS_WRCLK
Reset State: 0x80
Reset Name: perph_rb

Define LDO Mode Transitions

LDO13_MODE_CTL2

Bits	Name	Description
7	NPM	Force NPM 0x1: FORCED_NPM 0x0: FORCED_NPM_FALSE
6	BYPASS_ACT	0x1: BYPASS_ACT_TRUE 0x0: BYPASS_ACT_FALSE
5	BYPASS_EN	Enable LDO bypass mode 0x1: BYPASS_ENABLED 0x0: BYPASS_DISABLED
4	FOLLOW_PMIC_AWAKE	NPM when PMIC_AWAKE (SLEEP_B) 0x1: FOLLOW_PMIC_AWAKE_TRUE 0x0: FOLLOW_PMIC_AWAKE_FALSE

0x00014C46 LDO13_EN_CTL

Type: RW
Clock: PBUS_WRCLK
Reset State: 0x00
Reset Name: perph_rb

LDO13_EN_CTL

Bits	Name	Description
7	EN_LDO_INT	1' = Enable the LDO, '0' = do not force LDO on 0x1: EN_LDO_INT_TRUE 0x0: EN_LDO_INT_FALSE

0x00014C48 LDO13_PD_CTL

Type: RW
Clock: PBUS_WRCLK
Reset State: 0x80
Reset Name: perph_rb

LDO13_PD_CTL

Bits	Name	Description
7	PULLDN_EN	Enable the pulldown when the regulator is disabled 0x1: PULLDN_ENABLED 0x0: PULLDN_DIABLED

0x00014C4C LDO13_SOFT_START_CTL

Type: RW
Clock: PBUS_WRCLK
Reset State: 0x80
Reset Name: perph_rb

LDO13_SOFT_START_CTL

Bits	Name	Description
7	SOFT_START	0x1: SOFT_START_ENABLED 0x0: SOFT_START_DISABLED

0x00014C52 LDO13_CONFIG_CTL

Type: RW
Clock: PBUS_WRCLK
Reset State: 0x04
Reset Name: perph_rb

LDO13_CONFIG_CTL

Bits	Name	Description
3	ACT_BYPASS_BUFF_EN	0x1: ACT_BYPASS_BUFF_ENABLED 0x0: ACT_BYPASS_BUFF_DISABLED
2	MODE_TRAN_ENH_EN	PMOS LDO only, when set high, the internal nodes in the error amp are short circuited during NPM?LPM transition 0x1: MODE_TRAN_ENH_ENABLED 0x0: MODE_TRAN_ENH_DISABLED

66 LDO14

0x00014D00 - RESERVED
0x00014D03

0x00014D04 LDO14_PERPH_TYPE

Type: R
Clock: PBUS_WRCLK
Reset State: 0x21
Reset Name: n/a

Peripheral Type

PMIC_CONSTANT

LDO14_PERPH_TYPE

Bits	Name	Description
7:0	TYPE	LDO

0x00014D08 LDO14_STATUS1

Type: R
Clock: PBUS_WRCLK
Reset State: 0x00000000
Reset Name: n/a

Status Registers

LDO14_STATUS1

Bits	Name	Description
7	VREG_OK	DEF: X VREG output voltage level. VREG_OK is always high when LDO is in bypass mode 0x1: LDO_VOLTAGE_OK 0x0: LDO_VOLTAGE_LOW

LDO14_STATUS1 (cont.)

Bits	Name	Description
2	BYPASS_LDO	DEF: X LDO is ON and in bypass mode 0x1: ON_AND_BYPASSED 0x0: OFF_OR_NON_BYPASS
1	NPM_TRUE	DEF: X VREG_OK and LDO is in NPM 0x1: NPM_VOLTAGE_OK 0x0: NOT_NPM_OR_VOLTAGE_NOT_OK

0x00014D09 LDO14_STATUS2

Type: R
Clock: PBUS_WRCLK
Reset State: 0x00
Reset Name: n/a

Status Registers

LDO14_STATUS2

Bits	Name	Description
7	SOFTSTART_DONE	indicates that the startup is complete LDO in normal mode 0x1: SOFTSTART_DONE 0x0: SOFTSTART_NOT_DONE
5	VREG_ON	indicate whether the regulator is on 0x1: LDO_ON 0x0: LDO_OFF

0x00014D10 LDO14_INT_RT_STS

Type: R
Clock: PBUS_WRCLK
Reset State: 0x00
Reset Name: n/a

Interrupt Real Time Status Bits

LDO14_INT_RT_STS

Bits	Name	Description
0	VREG_OK_RT_STS	Regulator has been successfully enabled 0x1: LDO_ENABLE_SUCCESS 0x0: LDO_ENABLE_ERR

0x00014D11 LDO14_INT_SET_TYPE

Type: R
Clock: PBUS_WRCLK
Reset State: 0x00
Reset Name: n/a

LDO14_INT_SET_TYPE

Bits	Name	Description
0	VREG_OK_TYPE	Interrupt type, edge or level 0x1: VREG_OK_LEVEL_TRIGGERED 0x0: VREG_OK_EDGE_TRIGGERED

0x00014D12 LDO14_INT_POLARITY_HIGH

Type: RW
Clock: PBUS_WRCLK
Reset State: 0x00
Reset Name: perph_rb

LDO14_INT_POLARITY_HIGH

Bits	Name	Description
0	VREG_OK_HIGH	Edge type, rising or Level type, high true 0x1: VREG_OK_LOW_TRIGGERED 0x0: VREG_OK_LOW_DISABLED

0x00014D13 LDO14_INT_POLARITY_LOW

Type: R
Clock: PBUS_WRCLK
Reset State: 0x00
Reset Name: n/a

LDO14_INT_POLARITY_LOW

Bits	Name	Description
0	VREG_OK_LOW	Edge type, falling or Level type, low true 0x1: VREG_OK_RISING_TRIGGERED 0x0: VREG_OK_FALLING_TRIGGERED

0x00014D14 LDO14_INT_LATCHED_CLR

Type: W
Clock: PBUS_WRCLK
Reset State: 0x00
Reset Name: perph_rb

writing a '1' to this interrupt will rearm the interrupt when an interrupt is pending. It clears the internal sticky and sent bits

LDO14_INT_LATCHED_CLR

Bits	Name	Description
0	VREG_OK_LATCHED_CLR	0x1: VREG_OK_ERROR_REARM 0x0: VREG_OK_ERROR_NOT_REARM

0x00014D15 LDO14_INT_EN_SET

Type: RW
Clock: PBUS_WRCLK
Reset State: 0x00
Reset Name: perph_rb

writing '0' to this register has no effect. Writing a '1' will enable the corresponding interrupt. Reading this register will readback enable status

PMIC_SET_MASK

LDO14_INT_EN_SET

Bits	Name	Description
0	VREG_OK_EN_SET	0x1: VREG_OK_ERROR_ENABLED 0x0: VREG_OK_ERROR_DISABLED

0x00014D16 LDO14_INT_EN_CLR

Type: RW
Clock: PBUS_WRCLK
Reset State: 0x00
Reset Name: perph_rb

writing '0' to this register has no effect. Writing a '1' will disable the corresponding interrupt. Reading this register will readback enable status

PMIC_CLR_MASK=INT_EN_SET

LDO14_INT_EN_CLR

Bits	Name	Description
0	VREG_OK_EN_CLR	0x1: VREG_OK_ERROR_ENABLED 0x0: VREG_OK_ERROR_DISABLED

0x00014D18 LDO14_INT_LATCHED_STS

Type: R
Clock: PBUS_WRCLK
Reset State: 0x00
Reset Name: n/a

Latched (Sticky) Interrupt. '1' indicates that the interrupt has triggered. Once the latched bit is set it can only be cleared by writing the clear bit.

LDO14_INT_LATCHED_STS

Bits	Name	Description
0	VREG_OK_LATCHED_STS	Regulator has been successfully enabled 0x1: LDO_VOLTAGE_LOW 0x0: LDO_VOLTAGE_OK

0x00014D19 LDO14_INT_PENDING_STS

Type: R
Clock: PBUS_WRCLK
Reset State: 0x00
Reset Name: n/a

Debug: Pending is set if interrupt has been sent but not cleared.

LDO14_INT_PENDING_STS

Bits	Name	Description
0	VREG_OK_PENDING_STS	Regulator has been successfully enabled 0x1: LDO_ENABLE_SUCCESS 0x0: LDO_ENABLE_FALSE

0x00014D1A LDO14_INT_MID_SEL

Type: RW
Clock: PBUS_WRCLK
Reset State: 0x00
Reset Name: perph_rb

Selects the MID that will receive the interrupt

LDO14_INT_MID_SEL

Bits	Name	Description
1:0	INT_MID_SEL	0x1: INT_MID_SEL_1 0x0: INT_MID_SEL_0

0x00014D1B LDO14_INT_PRIORITY

Type: RW
Clock: PBUS_WRCLK
Reset State: 0x00
Reset Name: perph_rb

LDO14_INT_PRIORITY

Bits	Name	Description
0	INT_PRIORITY	0x1: INT_PRIORITY_A 0x0: INT_PRIORITY_SR

0x00014D41 LDO14_VOLTAGE_CTL2

Type: RW
Clock: PBUS_WRCLK
Reset State: 0x04
Reset Name: perph_rb

LDO14_VOLTAGE_CTL2

Bits	Name	Description
6:0	VSET	Voltage = Vmin + VSET*(Vstep)

0x00014D45 LDO14_MODE_CTL2

Type: RW
Clock: PBUS_WRCLK
Reset State: 0x80
Reset Name: perph_rb

Define LDO Mode Transitions

LDO14_MODE_CTL2

Bits	Name	Description
7	NPM	Force NPM 0x1: FORCED_NPM 0x0: FORCED_NPM_FALSE
6	BYPASS_ACT	0x1: BYPASS_ACT_TRUE 0x0: BYPASS_ACT_FALSE
5	BYPASS_EN	Enable LDO bypass mode 0x1: BYPASS_ENABLED 0x0: BYPASS_DISABLED
4	FOLLOW_PMIC_AWAKE	NPM when PMIC_AWAKE (SLEEP_B) 0x1: FOLLOW_PMIC_AWAKE_TRUE 0x0: FOLLOW_PMIC_AWAKE_FALSE

0x00014D46 LDO14_EN_CTL

Type: RW
Clock: PBUS_WRCLK
Reset State: 0x00
Reset Name: perph_rb

LDO14_EN_CTL

Bits	Name	Description
7	EN_LDO_INT	1' = Enable the LDO, '0' = do not force LDO on 0x1: EN_LDO_INT_TRUE 0x0: EN_LDO_INT_FALSE

0x00014D48 LDO14_PD_CTL

Type: RW
Clock: PBUS_WRCLK
Reset State: 0x80
Reset Name: perph_rb

LDO14_PD_CTL

Bits	Name	Description
7	PULLDN_EN	Enable the pulldown when the regulator is disabled 0x1: PULLDN_ENABLED 0x0: PULLDN_DIABLED

0x00014D4C LDO14_SOFT_START_CTL

Type: RW
Clock: PBUS_WRCLK
Reset State: 0x80
Reset Name: perph_rb

LDO14_SOFT_START_CTL

Bits	Name	Description
7	SOFT_START	0x1: SOFT_START_ENABLED 0x0: SOFT_START_DISABLED

0x00014D52 LDO14_CONFIG_CTL

Type: RW
Clock: PBUS_WRCLK
Reset State: 0x04
Reset Name: perph_rb

LDO14_CONFIG_CTL

Bits	Name	Description
3	ACT_BYPASS_BUFF_EN	0x1: ACT_BYPASS_BUFF_ENABLED 0x0: ACT_BYPASS_BUFF_DISABLED
2	MODE_TRAN_ENH_EN	PMOS LDO only, when set high, the internal nodes in the error amp are short circuited during NPM?LPM transition 0x1: MODE_TRAN_ENH_ENABLED 0x0: MODE_TRAN_ENH_DISABLED

67 LDO15

0x00014E00 - RESERVED
0x00014E03

0x00014E04 LDO15_PERPH_TYPE

Type: R
Clock: PBUS_WRCLK
Reset State: 0x21
Reset Name: n/a

Peripheral Type

PMIC_CONSTANT

LDO15_PERPH_TYPE

Bits	Name	Description
7:0	TYPE	LDO

0x00014E08 LDO15_STATUS1

Type: R
Clock: PBUS_WRCLK
Reset State: 0x00000000
Reset Name: n/a

Status Registers

LDO15_STATUS1

Bits	Name	Description
7	VREG_OK	DEF: X VREG output voltage level. VREG_OK is always high when LDO is in bypass mode 0x1: LDO_VOLTAGE_OK 0x0: LDO_VOLTAGE_LOW

LDO15_STATUS1 (cont.)

Bits	Name	Description
2	BYPASS_LDO	DEF: X LDO is ON and in bypass mode 0x1: ON_AND_BYPASSED 0x0: OFF_OR_NON_BYPASS
1	NPM_TRUE	DEF: X VREG_OK and LDO is in NPM 0x1: NPM_VOLTAGE_OK 0x0: NOT_NPM_OR_VOLTAGE_NOT_OK

0x00014E09 LDO15_STATUS2

Type: R
Clock: PBUS_WRCLK
Reset State: 0x00
Reset Name: n/a

Status Registers

LDO15_STATUS2

Bits	Name	Description
7	SOFTSTART_DONE	indicates that the startup is complete LDO in normal mode 0x1: SOFTSTART_DONE 0x0: SOFTSTART_NOT_DONE
5	VREG_ON	indicate whether the regulator is on 0x1: LDO_ON 0x0: LDO_OFF

0x00014E10 LDO15_INT_RT_STS

Type: R
Clock: PBUS_WRCLK
Reset State: 0x00
Reset Name: n/a

Interrupt Real Time Status Bits

LDO15_INT_RT_STS

Bits	Name	Description
0	VREG_OK_RT_STS	Regulator has been successfully enabled 0x1: LDO_ENABLE_SUCCESS 0x0: LDO_ENABLE_ERR

0x00014E11 LDO15_INT_SET_TYPE

Type: R
Clock: PBUS_WRCLK
Reset State: 0x00
Reset Name: n/a

LDO15_INT_SET_TYPE

Bits	Name	Description
0	VREG_OK_TYPE	Interrupt type, edge or level 0x1: VREG_OK_LEVEL_TRIGGERED 0x0: VREG_OK_EDGE_TRIGGERED

0x00014E12 LDO15_INT_POLARITY_HIGH

Type: RW
Clock: PBUS_WRCLK
Reset State: 0x00
Reset Name: perph_rb

LDO15_INT_POLARITY_HIGH

Bits	Name	Description
0	VREG_OK_HIGH	Edge type, rising or Level type, high true 0x1: VREG_OK_LOW_TRIGGERED 0x0: VREG_OK_LOW_DISABLED

0x00014E13 LDO15_INT_POLARITY_LOW

Type: R
Clock: PBUS_WRCLK
Reset State: 0x00
Reset Name: n/a

LDO15_INT_POLARITY_LOW

Bits	Name	Description
0	VREG_OK_LOW	Edge type, falling or Level type, low true 0x1: VREG_OK_RISING_TRIGGERED 0x0: VREG_OK_FALLING_TRIGGERED

0x00014E14 LDO15_INT_LATCHED_CLR

Type: W
Clock: PBUS_WRCLK
Reset State: 0x00
Reset Name: perph_rb

writing a '1' to this interrupt will rearm the interrupt when an interrupt is pending. It clears the internal sticky and sent bits

LDO15_INT_LATCHED_CLR

Bits	Name	Description
0	VREG_OK_LATCHED_CLR	0x1: VREG_OK_ERROR_REARM 0x0: VREG_OK_ERROR_NOT_REARM

0x00014E15 LDO15_INT_EN_SET

Type: RW
Clock: PBUS_WRCLK
Reset State: 0x00
Reset Name: perph_rb

writing '0' to this register has no effect. Writing a '1' will enable the corresponding interrupt. Reading this register will readback enable status

PMIC_SET_MASK

LDO15_INT_EN_SET

Bits	Name	Description
0	VREG_OK_EN_SET	0x1: VREG_OK_ERROR_ENABLED 0x0: VREG_OK_ERROR_DISABLED

0x00014E16 LDO15_INT_EN_CLR

Type: RW
Clock: PBUS_WRCLK
Reset State: 0x00
Reset Name: perph_rb

writing '0' to this register has no effect. Writing a '1' will disable the corresponding interrupt. Reading this register will readback enable status

PMIC_CLR_MASK=INT_EN_SET

LDO15_INT_EN_CLR

Bits	Name	Description
0	VREG_OK_EN_CLR	0x1: VREG_OK_ERROR_ENABLED 0x0: VREG_OK_ERROR_DISABLED

0x00014E18 LDO15_INT_LATCHED_STS

Type: R
Clock: PBUS_WRCLK
Reset State: 0x00
Reset Name: n/a

Latched (Sticky) Interrupt. '1' indicates that the interrupt has triggered. Once the latched bit is set it can only be cleared by writing the clear bit.

LDO15_INT_LATCHED_STS

Bits	Name	Description
0	VREG_OK_LATCHED_STS	Regulator has been successfully enabled 0x1: LDO_VOLTAGE_LOW 0x0: LDO_VOLTAGE_OK

0x00014E19 LDO15_INT_PENDING_STS

Type: R
Clock: PBUS_WRCLK
Reset State: 0x00
Reset Name: n/a

Debug: Pending is set if interrupt has been sent but not cleared.

LDO15_INT_PENDING_STS

Bits	Name	Description
0	VREG_OK_PENDING_STS	Regulator has been successfully enabled 0x1: LDO_ENABLE_SUCCESS 0x0: LDO_ENABLE_FALSE

0x00014E1A LDO15_INT_MID_SEL

Type: RW
Clock: PBUS_WRCLK
Reset State: 0x00
Reset Name: perph_rb

Selects the MID that will receive the interrupt

LDO15_INT_MID_SEL

Bits	Name	Description
1:0	INT_MID_SEL	0x1: INT_MID_SEL_1 0x0: INT_MID_SEL_0

0x00014E1B LDO15_INT_PRIORITY

Type: RW
Clock: PBUS_WRCLK
Reset State: 0x00
Reset Name: perph_rb

LDO15_INT_PRIORITY

Bits	Name	Description
0	INT_PRIORITY	0x1: INT_PRIORITY_A 0x0: INT_PRIORITY_SR

0x00014E41 LDO15_VOLTAGE_CTL2

Type: RW
Clock: PBUS_WRCLK
Reset State: 0x04
Reset Name: perph_rb

LDO15_VOLTAGE_CTL2

Bits	Name	Description
6:0	VSET	Voltage = Vmin + VSET*(Vstep)

0x00014E45 LDO15_MODE_CTL2

Type: RW
Clock: PBUS_WRCLK
Reset State: 0x80
Reset Name: perph_rb

Define LDO Mode Transitions

LDO15_MODE_CTL2

Bits	Name	Description
7	NPM	Force NPM 0x1: FORCED_NPM 0x0: FORCED_NPM_FALSE
6	BYPASS_ACT	0x1: BYPASS_ACT_TRUE 0x0: BYPASS_ACT_FALSE
5	BYPASS_EN	Enable LDO bypass mode 0x1: BYPASS_ENABLED 0x0: BYPASS_DISABLED
4	FOLLOW_PMIC_AWAKE	NPM when PMIC_AWAKE (SLEEP_B) 0x1: FOLLOW_PMIC_AWAKE_TRUE 0x0: FOLLOW_PMIC_AWAKE_FALSE

0x00014E46 LDO15_EN_CTL

Type: RW
Clock: PBUS_WRCLK
Reset State: 0x00
Reset Name: perph_rb

LDO15_EN_CTL

Bits	Name	Description
7	EN_LDO_INT	1' = Enable the LDO, '0' = do not force LDO on 0x1: EN_LDO_INT_TRUE 0x0: EN_LDO_INT_FALSE

0x00014E48 LDO15_PD_CTL

Type: RW
Clock: PBUS_WRCLK
Reset State: 0x80
Reset Name: perph_rb

LDO15_PD_CTL

Bits	Name	Description
7	PULLDN_EN	Enable the pulldown when the regulator is disabled 0x1: PULLDN_ENABLED 0x0: PULLDN_DIABLED

0x00014E4C LDO15_SOFT_START_CTL

Type: RW
Clock: PBUS_WRCLK
Reset State: 0x80
Reset Name: perph_rb

LDO15_SOFT_START_CTL

Bits	Name	Description
7	SOFT_START	0x1: SOFT_START_ENABLED 0x0: SOFT_START_DISABLED

0x00014E52 LDO15_CONFIG_CTL

Type: RW
Clock: PBUS_WRCLK
Reset State: 0x04
Reset Name: perph_rb

LDO15_CONFIG_CTL

Bits	Name	Description
3	ACT_BYPASS_BUFF_EN	0x1: ACT_BYPASS_BUFF_ENABLED 0x0: ACT_BYPASS_BUFF_DISABLED
2	MODE_TRAN_ENH_EN	PMOS LDO only, when set high, the internal nodes in the error amp are short circuited during NPM?LPM transition 0x1: MODE_TRAN_ENH_ENABLED 0x0: MODE_TRAN_ENH_DISABLED

68 LDO16

0x00014F00 - RESERVED
0x00014F03

0x00014F04 LDO16_PERPH_TYPE

Type: R
Clock: PBUS_WRCLK
Reset State: 0x21
Reset Name: n/a

Peripheral Type

PMIC_CONSTANT

LDO16_PERPH_TYPE

Bits	Name	Description
7:0	TYPE	LDO

0x00014F08 LDO16_STATUS1

Type: R
Clock: PBUS_WRCLK
Reset State: 0x00000000
Reset Name: n/a

Status Registers

LDO16_STATUS1

Bits	Name	Description
7	VREG_OK	DEF: X VREG output voltage level. VREG_OK is always high when LDO is in bypass mode 0x1: LDO_VOLTAGE_OK 0x0: LDO_VOLTAGE_LOW

LDO16_STATUS1 (cont.)

Bits	Name	Description
2	BYPASS_LDO	DEF: X LDO is ON and in bypass mode 0x1: ON_AND_BYPASSED 0x0: OFF_OR_NON_BYPASS
1	NPM_TRUE	DEF: X VREG_OK and LDO is in NPM 0x1: NPM_VOLTAGE_OK 0x0: NOT_NPM_OR_VOLTAGE_NOT_OK

0x00014F09 LDO16_STATUS2

Type: R
Clock: PBUS_WRCLK
Reset State: 0x00
Reset Name: n/a

Status Registers

LDO16_STATUS2

Bits	Name	Description
7	SOFTSTART_DONE	indicates that the startup is complete LDO in normal mode 0x1: SOFTSTART_DONE 0x0: SOFTSTART_NOT_DONE
5	VREG_ON	indicate whether the regulator is on 0x1: LDO_ON 0x0: LDO_OFF

0x00014F10 LDO16_INT_RT_STS

Type: R
Clock: PBUS_WRCLK
Reset State: 0x00
Reset Name: n/a

Interrupt Real Time Status Bits

LDO16_INT_RT_STS

Bits	Name	Description
0	VREG_OK_RT_STS	Regulator has been successfully enabled 0x1: LDO_ENABLE_SUCCESS 0x0: LDO_ENABLE_ERR

0x00014F11 LDO16_INT_SET_TYPE

Type: R
Clock: PBUS_WRCLK
Reset State: 0x00
Reset Name: n/a

LDO16_INT_SET_TYPE

Bits	Name	Description
0	VREG_OK_TYPE	Interrupt type, edge or level 0x1: VREG_OK_LEVEL_TRIGGERED 0x0: VREG_OK_EDGE_TRIGGERED

0x00014F12 LDO16_INT_POLARITY_HIGH

Type: RW
Clock: PBUS_WRCLK
Reset State: 0x00
Reset Name: perph_rb

LDO16_INT_POLARITY_HIGH

Bits	Name	Description
0	VREG_OK_HIGH	Edge type, rising or Level type, high true 0x1: VREG_OK_LOW_TRIGGERED 0x0: VREG_OK_LOW_DISABLED

0x00014F13 LDO16_INT_POLARITY_LOW

Type: R
Clock: PBUS_WRCLK
Reset State: 0x00
Reset Name: n/a

LDO16_INT_POLARITY_LOW

Bits	Name	Description
0	VREG_OK_LOW	Edge type, falling or Level type, low true 0x1: VREG_OK_RISING_TRIGGERED 0x0: VREG_OK_FALLING_TRIGGERED

0x00014F14 LDO16_INT_LATCHED_CLR

Type: W
Clock: PBUS_WRCLK
Reset State: 0x00
Reset Name: perph_rb

writing a '1' to this interrupt will rearm the interrupt when an interrupt is pending. It clears the internal sticky and sent bits

LDO16_INT_LATCHED_CLR

Bits	Name	Description
0	VREG_OK_LATCHED_CLR	0x1: VREG_OK_ERROR_REARM 0x0: VREG_OK_ERROR_NOT_REARM

0x00014F15 LDO16_INT_EN_SET

Type: RW
Clock: PBUS_WRCLK
Reset State: 0x00
Reset Name: perph_rb

writing '0' to this register has no effect. Writing a '1' will enable the corresponding interrupt. Reading this register will readback enable status

PMIC_SET_MASK

LDO16_INT_EN_SET

Bits	Name	Description
0	VREG_OK_EN_SET	0x1: VREG_OK_ERROR_ENABLED 0x0: VREG_OK_ERROR_DISABLED

0x00014F16 LDO16_INT_EN_CLR

Type: RW
Clock: PBUS_WRCLK
Reset State: 0x00
Reset Name: perph_rb

writing '0' to this register has no effect. Writing a '1' will disable the corresponding interrupt. Reading this register will readback enable status

PMIC_CLR_MASK=INT_EN_SET

LDO16_INT_EN_CLR

Bits	Name	Description
0	VREG_OK_EN_CLR	0x1: VREG_OK_ERROR_ENABLED 0x0: VREG_OK_ERROR_DISABLED

0x00014F18 LDO16_INT_LATCHED_STS

Type: R
Clock: PBUS_WRCLK
Reset State: 0x00
Reset Name: n/a

Latched (Sticky) Interrupt. '1' indicates that the interrupt has triggered. Once the latched bit is set it can only be cleared by writing the clear bit.

LDO16_INT_LATCHED_STS

Bits	Name	Description
0	VREG_OK_LATCHED_STS	Regulator has been successfully enabled 0x1: LDO_VOLTAGE_LOW 0x0: LDO_VOLTAGE_OK

0x00014F19 LDO16_INT_PENDING_STS

Type: R
Clock: PBUS_WRCLK
Reset State: 0x00
Reset Name: n/a

Debug: Pending is set if interrupt has been sent but not cleared.

LDO16_INT_PENDING_STS

Bits	Name	Description
0	VREG_OK_PENDING_STS	Regulator has been successfully enabled 0x1: LDO_ENABLE_SUCCESS 0x0: LDO_ENABLE_FALSE

0x00014F1A LDO16_INT_MID_SEL

Type: RW
Clock: PBUS_WRCLK
Reset State: 0x00
Reset Name: perph_rb

Selects the MID that will receive the interrupt

LDO16_INT_MID_SEL

Bits	Name	Description
1:0	INT_MID_SEL	0x1: INT_MID_SEL_1 0x0: INT_MID_SEL_0

0x00014F1B LDO16_INT_PRIORITY

Type: RW
Clock: PBUS_WRCLK
Reset State: 0x00
Reset Name: perph_rb

LDO16_INT_PRIORITY

Bits	Name	Description
0	INT_PRIORITY	0x1: INT_PRIORITY_A 0x0: INT_PRIORITY_SR

0x00014F41 LDO16_VOLTAGE_CTL2

Type: RW
Clock: PBUS_WRCLK
Reset State: 0x04
Reset Name: perph_rb

LDO16_VOLTAGE_CTL2

Bits	Name	Description
6:0	VSET	Voltage = Vmin + VSET*(Vstep)

0x00014F45 LDO16_MODE_CTL2

Type: RW
Clock: PBUS_WRCLK
Reset State: 0x80
Reset Name: perph_rb

Define LDO Mode Transitions

LDO16_MODE_CTL2

Bits	Name	Description
7	NPM	Force NPM 0x1: FORCED_NPM 0x0: FORCED_NPM_FALSE
6	BYPASS_ACT	0x1: BYPASS_ACT_TRUE 0x0: BYPASS_ACT_FALSE
5	BYPASS_EN	Enable LDO bypass mode 0x1: BYPASS_ENABLED 0x0: BYPASS_DISABLED
4	FOLLOW_PMIC_AWAKE	NPM when PMIC_AWAKE (SLEEP_B) 0x1: FOLLOW_PMIC_AWAKE_TRUE 0x0: FOLLOW_PMIC_AWAKE_FALSE

0x00014F46 LDO16_EN_CTL

Type: RW
Clock: PBUS_WRCLK
Reset State: 0x00
Reset Name: perph_rb

LDO16_EN_CTL

Bits	Name	Description
7	EN_LDO_INT	1' = Enable the LDO, '0' = do not force LDO on 0x1: EN_LDO_INT_TRUE 0x0: EN_LDO_INT_FALSE

0x00014F48 LDO16_PD_CTL

Type: RW
Clock: PBUS_WRCLK
Reset State: 0x80
Reset Name: perph_rb

LDO16_PD_CTL

Bits	Name	Description
7	PULLDN_EN	Enable the pulldown when the regulator is disabled 0x1: PULLDN_ENABLED 0x0: PULLDN_DIABLED

0x00014F4C LDO16_SOFT_START_CTL

Type: RW
Clock: PBUS_WRCLK
Reset State: 0x80
Reset Name: perph_rb

LDO16_SOFT_START_CTL

Bits	Name	Description
7	SOFT_START	0x1: SOFT_START_ENABLED 0x0: SOFT_START_DISABLED

0x00014F52 LDO16_CONFIG_CTL

Type: RW
Clock: PBUS_WRCLK
Reset State: 0x04
Reset Name: perph_rb

LDO16_CONFIG_CTL

Bits	Name	Description
3	ACT_BYPASS_BUFF_EN	0x1: ACT_BYPASS_BUFF_ENABLED 0x0: ACT_BYPASS_BUFF_DISABLED
2	MODE_TRAN_ENH_EN	PMOS LDO only, when set high, the internal nodes in the error amp are short circuited during NPM?LPM transition 0x1: MODE_TRAN_ENH_ENABLED 0x0: MODE_TRAN_ENH_DISABLED

69 LDO17

0x00015000 - 0x00015003 RESERVED

0x00015004 LDO17_PERPH_TYPE

Type: R
Clock: PBUS_WRCLK
Reset State: 0x21
Reset Name: n/a

Peripheral Type

PMIC_CONSTANT

LDO17_PERPH_TYPE

Bits	Name	Description
7:0	TYPE	LDO

0x00015008 LDO17_STATUS1

Type: R
Clock: PBUS_WRCLK
Reset State: 0x00000000
Reset Name: n/a

Status Registers

LDO17_STATUS1

Bits	Name	Description
7	VREG_OK	DEF: X VREG output voltage level. VREG_OK is always high when LDO is in bypass mode 0x1: LDO_VOLTAGE_OK 0x0: LDO_VOLTAGE_LOW

LDO17_STATUS1 (cont.)

Bits	Name	Description
2	BYPASS_LDO	DEF: X LDO is ON and in bypass mode 0x1: ON_AND_BYPASSED 0x0: OFF_OR_NON_BYPASS
1	NPM_TRUE	DEF: X VREG_OK and LDO is in NPM 0x1: NPM_VOLTAGE_OK 0x0: NOT_NPM_OR_VOLTAGE_NOT_OK

0x00015009 LDO17_STATUS2

Type: R
Clock: PBUS_WRCLK
Reset State: 0x00
Reset Name: n/a

Status Registers

LDO17_STATUS2

Bits	Name	Description
7	SOFTSTART_DONE	indicates that the startup is complete LDO in normal mode 0x1: SOFTSTART_DONE 0x0: SOFTSTART_NOT_DONE
5	VREG_ON	indicate whether the regulator is on 0x1: LDO_ON 0x0: LDO_OFF

0x00015010 LDO17_INT_RT_STS

Type: R
Clock: PBUS_WRCLK
Reset State: 0x00
Reset Name: n/a

Interrupt Real Time Status Bits

LDO17_INT_RT_STS

Bits	Name	Description
0	VREG_OK_RT_STS	Regulator has been successfully enabled 0x1: LDO_ENABLE_SUCCESS 0x0: LDO_ENABLE_ERR

0x00015011 LDO17_INT_SET_TYPE

Type: R
Clock: PBUS_WRCLK
Reset State: 0x00
Reset Name: n/a

LDO17_INT_SET_TYPE

Bits	Name	Description
0	VREG_OK_TYPE	Interrupt type, edge or level 0x1: VREG_OK_LEVEL_TRIGGERED 0x0: VREG_OK_EDGE_TRIGGERED

0x00015012 LDO17_INT_POLARITY_HIGH

Type: RW
Clock: PBUS_WRCLK
Reset State: 0x00
Reset Name: perph_rb

LDO17_INT_POLARITY_HIGH

Bits	Name	Description
0	VREG_OK_HIGH	Edge type, rising or Level type, high true 0x1: VREG_OK_LOW_TRIGGERED 0x0: VREG_OK_LOW_DISABLED

0x00015013 LDO17_INT_POLARITY_LOW

Type: R
Clock: PBUS_WRCLK
Reset State: 0x00
Reset Name: n/a

LDO17_INT_POLARITY_LOW

Bits	Name	Description
0	VREG_OK_LOW	Edge type, falling or Level type, low true 0x1: VREG_OK_RISING_TRIGGERED 0x0: VREG_OK_FALLING_TRIGGERED

0x00015014 LDO17_INT_LATCHED_CLR

Type: W
Clock: PBUS_WRCLK
Reset State: 0x00
Reset Name: perph_rb

writing a '1' to this interrupt will rearm the interrupt when an interrupt is pending. It clears the internal sticky and sent bits

LDO17_INT_LATCHED_CLR

Bits	Name	Description
0	VREG_OK_LATCHED_CLR	0x1: VREG_OK_ERROR_REARM 0x0: VREG_OK_ERROR_NOT_REARM

0x00015015 LDO17_INT_EN_SET

Type: RW
Clock: PBUS_WRCLK
Reset State: 0x00
Reset Name: perph_rb

writing '0' to this register has no effect. Writing a '1' will enable the corresponding interrupt. Reading this register will readback enable status

PMIC_SET_MASK

LDO17_INT_EN_SET

Bits	Name	Description
0	VREG_OK_EN_SET	0x1: VREG_OK_ERROR_ENABLED 0x0: VREG_OK_ERROR_DISABLED

0x00015016 LDO17_INT_EN_CLR

Type: RW
Clock: PBUS_WRCLK
Reset State: 0x00
Reset Name: perph_rb

writing '0' to this register has no effect. Writing a '1' will disable the corresponding interrupt. Reading this register will readback enable status

PMIC_CLR_MASK=INT_EN_SET

LDO17_INT_EN_CLR

Bits	Name	Description
0	VREG_OK_EN_CLR	0x1: VREG_OK_ERROR_ENABLED 0x0: VREG_OK_ERROR_DISABLED

0x00015018 LDO17_INT_LATCHED_STS

Type: R
Clock: PBUS_WRCLK
Reset State: 0x00
Reset Name: n/a

Latched (Sticky) Interrupt. '1' indicates that the interrupt has triggered. Once the latched bit is set it can only be cleared by writing the clear bit.

LDO17_INT_LATCHED_STS

Bits	Name	Description
0	VREG_OK_LATCHED_STS	Regulator has been successfully enabled 0x1: LDO_VOLTAGE_LOW 0x0: LDO_VOLTAGE_OK

0x00015019 LDO17_INT_PENDING_STS

Type: R
Clock: PBUS_WRCLK
Reset State: 0x00
Reset Name: n/a

Debug: Pending is set if interrupt has been sent but not cleared.

LDO17_INT_PENDING_STS

Bits	Name	Description
0	VREG_OK_PENDING_STS	Regulator has been successfully enabled 0x1: LDO_ENABLE_SUCCESS 0x0: LDO_ENABLE_FALSE

0x0001501A LDO17_INT_MID_SEL

Type: RW
Clock: PBUS_WRCLK
Reset State: 0x00
Reset Name: perph_rb

Selects the MID that will receive the interrupt

LDO17_INT_MID_SEL

Bits	Name	Description
1:0	INT_MID_SEL	0x1: INT_MID_SEL_1 0x0: INT_MID_SEL_0

0x0001501B LDO17_INT_PRIORITY

Type: RW
Clock: PBUS_WRCLK
Reset State: 0x00
Reset Name: perph_rb

LDO17_INT_PRIORITY

Bits	Name	Description
0	INT_PRIORITY	0x1: INT_PRIORITY_A 0x0: INT_PRIORITY_SR

0x00015041 LDO17_VOLTAGE_CTL2

Type: RW
Clock: PBUS_WRCLK
Reset State: 0x58
Reset Name: perph_rb

LDO17_VOLTAGE_CTL2

Bits	Name	Description
6:0	VSET	Voltage = Vmin + VSET*(Vstep)

0x00015045 LDO17_MODE_CTL2

Type: RW
Clock: PBUS_WRCLK
Reset State: 0x80
Reset Name: perph_rb

Define LDO Mode Transitions

LDO17_MODE_CTL2

Bits	Name	Description
7	NPM	Force NPM 0x1: FORCED_NPM 0x0: FORCED_NPM_FALSE
6	BYPASS_ACT	0x1: BYPASS_ACT_TRUE 0x0: BYPASS_ACT_FALSE
5	BYPASS_EN	Enable LDO bypass mode 0x1: BYPASS_ENABLED 0x0: BYPASS_DISABLED
4	FOLLOW_PMIC_AWAKE	NPM when PMIC_AWAKE (SLEEP_B) 0x1: FOLLOW_PMIC_AWAKE_TRUE 0x0: FOLLOW_PMIC_AWAKE_FALSE

0x00015046 LDO17_EN_CTL

Type: RW
Clock: PBUS_WRCLK
Reset State: 0x00
Reset Name: perph_rb

LDO17_EN_CTL

Bits	Name	Description
7	EN_LDO_INT	1' = Enable the LDO, '0' = do not force LDO on 0x1: EN_LDO_INT_TRUE 0x0: EN_LDO_INT_FALSE

0x00015048 LDO17_PD_CTL

Type: RW
Clock: PBUS_WRCLK
Reset State: 0x80
Reset Name: perph_rb

LDO17_PD_CTL

Bits	Name	Description
7	PULLDN_EN	Enable the pulldown when the regulator is disabled 0x1: PULLDN_ENABLED 0x0: PULLDN_DIABLED

0x0001504C LDO17_SOFT_START_CTL

Type: RW
Clock: PBUS_WRCLK
Reset State: 0x80
Reset Name: perph_rb

LDO17_SOFT_START_CTL

Bits	Name	Description
7	SOFT_START	0x1: SOFT_START_ENABLED 0x0: SOFT_START_DISABLED

0x00015052 LDO17_CONFIG_CTL

Type: RW
Clock: PBUS_WRCLK
Reset State: 0x04
Reset Name: perph_rb

LDO17_CONFIG_CTL

Bits	Name	Description
3	ACT_BYPASS_BUFF_EN	0x1: ACT_BYPASS_BUFF_ENABLED 0x0: ACT_BYPASS_BUFF_DISABLED
2	MODE_TRAN_ENH_EN	PMOS LDO only, when set high, the internal nodes in the error amp are short circuited during NPM?LPM transition 0x1: MODE_TRAN_ENH_ENABLED 0x0: MODE_TRAN_ENH_DISABLED

70 LDO18

0x00015100 - 0x00015103 RESERVED

0x00015104 LDO18_PERPH_TYPE

Type: R
Clock: PBUS_WRCLK
Reset State: 0x21
Reset Name: n/a

Peripheral Type

PMIC_CONSTANT

LDO18_PERPH_TYPE

Bits	Name	Description
7:0	TYPE	LDO

0x00015108 LDO18_STATUS1

Type: R
Clock: PBUS_WRCLK
Reset State: 0x00000000
Reset Name: n/a

Status Registers

LDO18_STATUS1

Bits	Name	Description
7	VREG_OK	DEF: X VREG output voltage level. VREG_OK is always high when LDO is in bypass mode 0x1: LDO_VOLTAGE_OK 0x0: LDO_VOLTAGE_LOW

LDO18_STATUS1 (cont.)

Bits	Name	Description
2	BYPASS_LDO	DEF: X LDO is ON and in bypass mode 0x1: ON_AND_BYPASSED 0x0: OFF_OR_NON_BYPASS
1	NPM_TRUE	DEF: X VREG_OK and LDO is in NPM 0x1: NPM_VOLTAGE_OK 0x0: NOT_NPM_OR_VOLTAGE_NOT_OK

0x00015109 LDO18_STATUS2

Type: R
Clock: PBUS_WRCLK
Reset State: 0x00
Reset Name: n/a

Status Registers

LDO18_STATUS2

Bits	Name	Description
7	SOFTSTART_DONE	indicates that the startup is complete LDO in normal mode 0x1: SOFTSTART_DONE 0x0: SOFTSTART_NOT_DONE
5	VREG_ON	indicate whether the regulator is on 0x1: LDO_ON 0x0: LDO_OFF

0x00015110 LDO18_INT_RT_STS

Type: R
Clock: PBUS_WRCLK
Reset State: 0x00
Reset Name: n/a

Interrupt Real Time Status Bits

LDO18_INT_RT_STS

Bits	Name	Description
0	VREG_OK_RT_STS	Regulator has been successfully enabled 0x1: LDO_ENABLE_SUCCESS 0x0: LDO_ENABLE_ERR

0x00015111 LDO18_INT_SET_TYPE

Type: R
Clock: PBUS_WRCLK
Reset State: 0x00
Reset Name: n/a

LDO18_INT_SET_TYPE

Bits	Name	Description
0	VREG_OK_TYPE	Interrupt type, edge or level 0x1: VREG_OK_LEVEL_TRIGGERED 0x0: VREG_OK_EDGE_TRIGGERED

0x00015112 LDO18_INT_POLARITY_HIGH

Type: RW
Clock: PBUS_WRCLK
Reset State: 0x00
Reset Name: perph_rb

LDO18_INT_POLARITY_HIGH

Bits	Name	Description
0	VREG_OK_HIGH	Edge type, rising or Level type, high true 0x1: VREG_OK_LOW_TRIGGERED 0x0: VREG_OK_LOW_DISABLED

0x00015113 LDO18_INT_POLARITY_LOW

Type: R
Clock: PBUS_WRCLK
Reset State: 0x00
Reset Name: n/a

LDO18_INT_POLARITY_LOW

Bits	Name	Description
0	VREG_OK_LOW	Edge type, falling or Level type, low true 0x1: VREG_OK_RISING_TRIGGERED 0x0: VREG_OK_FALLING_TRIGGERED

0x00015114 LDO18_INT_LATCHED_CLR

Type: W
Clock: PBUS_WRCLK
Reset State: 0x00
Reset Name: perph_rb

writing a '1' to this interrupt will rearm the interrupt when an interrupt is pending. It clears the internal sticky and sent bits

LDO18_INT_LATCHED_CLR

Bits	Name	Description
0	VREG_OK_LATCHED_CLR	0x1: VREG_OK_ERROR_REARM 0x0: VREG_OK_ERROR_NOT_REARM

0x00015115 LDO18_INT_EN_SET

Type: RW
Clock: PBUS_WRCLK
Reset State: 0x00
Reset Name: perph_rb

writing '0' to this register has no effect. Writing a '1' will enable the corresponding interrupt. Reading this register will readback enable status

PMIC_SET_MASK

LDO18_INT_EN_SET

Bits	Name	Description
0	VREG_OK_EN_SET	0x1: VREG_OK_ERROR_ENABLED 0x0: VREG_OK_ERROR_DISABLED

0x00015116 LDO18_INT_EN_CLR

Type: RW
Clock: PBUS_WRCLK
Reset State: 0x00
Reset Name: perph_rb

writing '0' to this register has no effect. Writing a '1' will disable the corresponding interrupt. Reading this register will readback enable status

PMIC_CLR_MASK=INT_EN_SET

LDO18_INT_EN_CLR

Bits	Name	Description
0	VREG_OK_EN_CLR	0x1: VREG_OK_ERROR_ENABLED 0x0: VREG_OK_ERROR_DISABLED

0x00015118 LDO18_INT_LATCHED_STS

Type: R
Clock: PBUS_WRCLK
Reset State: 0x00
Reset Name: n/a

Latched (Sticky) Interrupt. '1' indicates that the interrupt has triggered. Once the latched bit is set it can only be cleared by writing the clear bit.

LDO18_INT_LATCHED_STS

Bits	Name	Description
0	VREG_OK_LATCHED_STS	Regulator has been successfully enabled 0x1: LDO_VOLTAGE_LOW 0x0: LDO_VOLTAGE_OK

0x00015119 LDO18_INT_PENDING_STS

Type: R
Clock: PBUS_WRCLK
Reset State: 0x00
Reset Name: n/a

Debug: Pending is set if interrupt has been sent but not cleared.

LDO18_INT_PENDING_STS

Bits	Name	Description
0	VREG_OK_PENDING_STS	Regulator has been successfully enabled 0x1: LDO_ENABLE_SUCCESS 0x0: LDO_ENABLE_FALSE

0x0001511A LDO18_INT_MID_SEL

Type: RW
Clock: PBUS_WRCLK
Reset State: 0x00
Reset Name: perph_rb

Selects the MID that will receive the interrupt

LDO18_INT_MID_SEL

Bits	Name	Description
1:0	INT_MID_SEL	0x1: INT_MID_SEL_1 0x0: INT_MID_SEL_0

0x0001511B LDO18_INT_PRIORITY

Type: RW
Clock: PBUS_WRCLK
Reset State: 0x00
Reset Name: perph_rb

LDO18_INT_PRIORITY

Bits	Name	Description
0	INT_PRIORITY	0x1: INT_PRIORITY_A 0x0: INT_PRIORITY_SR

0x00015141 LDO18_VOLTAGE_CTL2

Type: RW
Clock: PBUS_WRCLK
Reset State: 0x4C
Reset Name: perph_rb

LDO18_VOLTAGE_CTL2

Bits	Name	Description
6:0	VSET	Voltage = Vmin + VSET*(Vstep)

0x00015145 LDO18_MODE_CTL2

Type: RW
Clock: PBUS_WRCLK
Reset State: 0x80
Reset Name: perph_rb

Define LDO Mode Transitions

LDO18_MODE_CTL2

Bits	Name	Description
7	NPM	Force NPM 0x1: FORCED_NPM 0x0: FORCED_NPM_FALSE
6	BYPASS_ACT	0x1: BYPASS_ACT_TRUE 0x0: BYPASS_ACT_FALSE
5	BYPASS_EN	Enable LDO bypass mode 0x1: BYPASS_ENABLED 0x0: BYPASS_DISABLED
4	FOLLOW_PMIC_AWAKE	NPM when PMIC_AWAKE (SLEEP_B) 0x1: FOLLOW_PMIC_AWAKE_TRUE 0x0: FOLLOW_PMIC_AWAKE_FALSE

0x00015146 LDO18_EN_CTL

Type: RW
Clock: PBUS_WRCLK
Reset State: 0x00
Reset Name: perph_rb

LDO18_EN_CTL

Bits	Name	Description
7	EN_LDO_INT	1' = Enable the LDO, '0' = do not force LDO on 0x1: EN_LDO_INT_TRUE 0x0: EN_LDO_INT_FALSE

0x00015148 LDO18_PD_CTL

Type: RW
Clock: PBUS_WRCLK
Reset State: 0x80
Reset Name: perph_rb

LDO18_PD_CTL

Bits	Name	Description
7	PULLDN_EN	Enable the pulldown when the regulator is disabled 0x1: PULLDN_ENABLED 0x0: PULLDN_DIABLED

0x0001514C LDO18_SOFT_START_CTL

Type: RW
Clock: PBUS_WRCLK
Reset State: 0x80
Reset Name: perph_rb

LDO18_SOFT_START_CTL

Bits	Name	Description
7	SOFT_START	0x1: SOFT_START_ENABLED 0x0: SOFT_START_DISABLED

0x00015152 LDO18_CONFIG_CTL

Type: RW
Clock: PBUS_WRCLK
Reset State: 0x04
Reset Name: perph_rb

LDO18_CONFIG_CTL

Bits	Name	Description
3	ACT_BYPASS_BUFF_EN	0x1: ACT_BYPASS_BUFF_ENABLED 0x0: ACT_BYPASS_BUFF_DISABLED
2	MODE_TRAN_ENH_EN	PMOS LDO only, when set high, the internal nodes in the error amp are short circuited during NPM?LPM transition 0x1: MODE_TRAN_ENH_ENABLED 0x0: MODE_TRAN_ENH_DISABLED

71 PWM_SLICE

0x0001BC00 - 0x0001BC01 RESERVED

0x0001BC04 PWM_PERPH_TYPE

Type: R
Clock: PBUS_WRCLK
Reset State: 0x13
Reset Name: N/A

Peripheral Type

PMIC_CONSTANT

PWM_PERPH_TYPE

Bits	Name	Description
7:0	TYPE	LPG

0x0001BC05 PWM_PERPH_SUBTYPE

Type: R
Clock: PBUS_WRCLK
Reset State: 0x0B
Reset Name: N/A

Peripheral SubType

PMIC_CONSTANT

PWM_PERPH_SUBTYPE

Bits	Name	Description
7:0	SUBTYPE	PWM Channel

0x0001BC41 PWM_PWM_SIZE_CLK

Type: RW
Clock: PBUS_WRCLK
Reset State: 0x04
Reset Name: PERPH_RB

This register sets the PWM frequency according to the foll. formula

PWM_FREQ = PWM_FREQ_CLK_SELECT/(2^(PWM_SIZE))*(2^(PWM_FREQ_EXPONENT)*PWM_FREQ_PRE_DIVIDE)

PWM_PWM_SIZE_CLK

Bits	Name	Description
2	PWM_SIZE	0 = 6-bit PWM 1 = 9-bit PWM 0x0: PWM_6BIT 0x1: PWM_9BIT
1:0	PWM_FREQ_CLK_SELECT	sets the PWM master clock 00 = no clock 01 = 1 kHz 10 = 32 kHz 11 = 19.2 MHz 0x0: NOCLK 0x1: CLK_1KHZ 0x2: CLK_32KHZ 0x3: CLK_19P2MHZ

0x0001BC42 PWM_PWM_FREQ_PREDIV_CLK

Type: RW
Clock: PBUS_WRCLK
Reset State: 0x00
Reset Name: PERPH_RB

This register selects the pre-divide and exponent values to divide down the pwm master clock

PWM_PWM_FREQ_PREDIV_CLK

Bits	Name	Description
6:5	PWM_FREQ_PRE_DIVIDE	00 = 1 01 = 3 10 = 5 11 = 6 0x0: PREDIV_ONE 0x1: PREDIV_THREE 0x2: PREDIV_FIVE 0x3: PREDIV_SIX
2:0	PWM_FREQ_EXPONENT	000 = 0 001 = 1 .. 111 = 7 0x0: EXP_ZERO 0x1: EXP_ONE 0x2: EXP_TWO 0x3: EXP_THREE 0x4: EXP_FOUR 0x5: EXP_FIVE 0x6: EXP_SIX 0x7: EXP_SEVEN

0x0001BC43 PWM_PWM_TYPE_CONFIG

Type: RW
Clock: PBUS_WRCLK
Reset State: 0x00
Reset Name: PERPH_RB

PWM_PWM_TYPE_CONFIG

Bits	Name	Description
5	EN_GLITCH_REMOVAL	0 = no glitch removal, PWM outputs are updated immediately 1 = glitch removal, PWM outputs are updated only on PWM period boundaries 0x0: GLITCH_REMOVE_DIS 0x1: GLITCH_REMOVE_EN

0x0001BC44 PWM_PWM_VALUE_LSB

Type: RW
Clock: PBUS_WRCLK
Reset State: 0x00
Reset Name: PERPH_RB

PWM_VALUE_LSB

PWM_PWM_VALUE_LSB

Bits	Name	Description
7:0	PWM_VALUE_LSB	lower 8 bits of PWM

0x0001BC45 PWM_PWM_VALUE_MSB

Type: RW
Clock: PBUS_WRCLK
Reset State: 0x00
Reset Name: PERPH_RB

PWM_VALUE_MSB

PWM_PWM_VALUE_MSB

Bits	Name	Description
0	PWM_VALUE_MSB	MSB (bit 9) of PWM

0x0001BC46 PWM_ENABLE_CONTROL

Type: RW
Clock: PBUS_WRCLK
Reset State: 0x00
Reset Name: PERPH_RB

Enables PWM output

PWM_ENABLE_CONTROL

Bits	Name	Description
7	EN_MODULE	0 = Module disabled (High Z) 1 = Module enabled 0x0: PWM_DISABLE 0x1: PWM_ENABLE

0x0001BC47 PWM_PWM_SYNC

Type: W
Clock: PBUS_WRCLK
Reset State: 0x00
Reset Name: PERPH_RB

PWM_PWM_SYNC

Bits	Name	Description
0	SYNC_PWM	Writing 1 to this register will update the 6/9-bit PWM value. This bit is auto-cleared

72 Vibrator Driver

0x0001C000 - RESERVED
0x0001C003

0x0001C004 VIB1_PERPH_TYPE

Type: R
Clock: PBUS_WRCLK
Reset State: 0x15
Reset Name: n/a

Peripheral Type

VIB1_PERPH_TYPE

Bits	Name	Description
7:0	TYPE	0x15: HAPTICS

0x0001C005 VIB1_PERPH_SUBTYPE

Type: R
Clock: PBUS_WRCLK
Reset State: 0x01
Reset Name: n/a

Peripheral SubType

VIB1_PERPH_SUBTYPE

Bits	Name	Description
7:0	SUBTYPE	0x1: VIB_SE

0x0001C008 VIB1_STATUS1

Type: R
Clock: PBUS_WRCLK
Reset State: 0x00000000
Reset Name: n/a

Status Registers

VIB1_STATUS1

Bits	Name	Description
7	VIB_OK	DEF: X 0x0: VIB_DISABLED 0x1: VIB_ENABLED

0x0001C041 VIB1_VOLTAGE_CTL2

Type: RW
Clock: PBUS_WRCLK
Reset State: 0x00
Reset Name: perph_rb

VIB1_VOLTAGE_CTL2

Bits	Name	Description
4:0	V_SET	00000 to 01011 = invalid settings 01100 to 11111 = Vout = X * 100 mV 0xC: VIB_VSET_1V2 0xD: VIB_VSET_1V3 0xE: VIB_VSET_1V4 0xF: VIB_VSET_1V5 0x10: VIB_VSET_1V6 0x11: VIB_VSET_1V7 0x12: VIB_VSET_1V8 0x13: VIB_VSET_1V9 0x14: VIB_VSET_2V0 0x15: VIB_VSET_2V1 0x16: VIB_VSET_2V2 0x17: VIB_VSET_2V3 0x18: VIB_VSET_2V4 0x19: VIB_VSET_2V5 0x1A: VIB_VSET_2V6 0x1B: VIB_VSET_2V7 0x1C: VIB_VSET_2V8 0x1D: VIB_VSET_2V9 0x1E: VIB_VSET_3V0 0x1F: VIB_VSET_3V1

0x0001C046 VIB1_EN_CTL

Type: RW
Clock: PBUS_WRCLK
Reset State: 0x00
Reset Name: perph_rb

VIB1_EN_CTL

Bits	Name	Description
7	PERPH_EN	1' = Enable the VIB_DRV, '0' = do not force VIB_DRV on 0x0: VIB_DISABLED 0x1: VIB_ENABLED
4	INV_DTEST	0 = vib motor is on when DTEST is high 1 = vib motor is on when DTEST is low 0x0: VIB_ENABLE_DTEST_HIGH 0x1: VIB_ENABLE_DTEST_LOW
2	FOLLOW_DTEST3	1'= VIB_DRV is enabled when DTEST3 ='1', '0'= ignore DTEST3 0x0: VIB_IGNORE_DTEST3 0x1: VIB_FOLLOW_DTEST3
1	FOLLOW_DTEST2	1'= VIB_DRV is enabled when DTEST2 ='1', '0'= ignore DTEST2 0x0: VIB_IGNORE_DTEST2 0x1: VIB_FOLLOW_DTEST2
0	FOLLOW_DTEST1	1'= VIB_DRV is enabled when DTEST1 ='1', '0'= ignore DTEST1 0x0: VIB_IGNORE_DTEST1 0x1: VIB_FOLLOW_DTEST1

73 CDC_D_CODEC_CONTROL

0x0001F000 CDC_D_REVISION1

Type: R
Clock: PBUS_WRCLK
Reset State: 0x01
Reset Name: n/a

HW Version Register [7:0]

PMIC_CONSTANT

CDC_D_REVISION1

Bits	Name	Description
7:0	DIG_MINOR	This number is incremented for digital change that is not intended to affect software or any change that adds a new feature but is backwards compatible with old software. Software changes may be required to take advantage of the new features. Minor resets to zero when Major increments.

0x0001F001 CDC_D_REVISION2

Type: R
Clock: PBUS_WRCLK
Reset State: 0x00
Reset Name: n/a

HW Version Register [15:8]

PMIC_CONSTANT

CDC_D_REVISION2

Bits	Name	Description
7:0	DIG_MAJOR	This number is incremented when changes are made to the digital HW that are not backwards compatible with existing software.

0x0001F004 CDC_D_PERPH_TYPE

Type: R
Clock: PBUS_WRCLK
Reset State: 0x23
Reset Name: n/a

Peripheral Type

PMIC_CONSTANT

CDC_D_PERPH_TYPE

Bits	Name	Description
7:0	TYPE	

0x0001F005 CDC_D_PERPH_SUBTYPE

Type: R
Clock: PBUS_WRCLK
Reset State: 0x01
Reset Name: n/a

Peripheral SubType

PMIC_CONSTANT

CDC_D_PERPH_SUBTYPE

Bits	Name	Description
7:0	SUBTYPE	

0x0001F010 CDC_D_INT_RT_STS

Type: R
Clock: PBUS_WRCLK
Reset State: 0x00
Reset Name: n/a

Interrupt Real Time Status Bits

CDC_D_INT_RT_STS

Bits	Name	Description
7	MBHC_SWITCH_INT	
6	MBHC_MIC_ELECTRICAL_INS_REM_DET	
5	MBHC_BUTTON_PRESS_DET	

CDC_D_INT_RT_STS (cont.)

Bits	Name	Description
4	MBHC_BUTTON_RELEASE_DET	
3	MBHC_MIC_ELECTRICAL_INS_REM_DET1	
2	D_CDC_SPKR_OCP_INT	
1	D_CDC_SPKR_CLIP_INT	
0	D_CDC_SPKR_CNP_INT	

0x0001F011 CDC_D_INT_SET_TYPE

Type: R
Clock: PBUS_WRCLK
Reset State: 0xFF
Reset Name: perph_rb

0 = use level trigger interrupts, 1 = use edge trigger interrupts

CDC_D_INT_SET_TYPE

Bits	Name	Description
7	MBHC_SWITCH_INT	Read register description above
6	MBHC_MIC_ELECTRICAL_INS_REM_DET	Read register description above
5	MBHC_BUTTON_PRESS_DET	Read register description above
4	MBHC_BUTTON_RELEASE_DET	Read register description above
3	MBHC_MIC_ELECTRICAL_INS_REM_DET1	Read register description above
2	D_CDC_SPKR_OCP_INT	Read register description above
1	D_CDC_SPKR_CLIP_INT	Read register description above
0	D_CDC_SPKR_CNP_INT	Read register description above

0x0001F012 CDC_D_INT_POLARITY_HIGH

Type: R
Clock: PBUS_WRCLK
Reset State: 0xFF
Reset Name: perph_rb

1 = Interrupt will trigger on a level high (rising edge) event, 0 = level high triggering is disabled

CDC_D_INT_POLARITY_HIGH

Bits	Name	Description
7	MBHC_SWITCH_INT	Read register description above
6	MBHC_MIC_ELECTRICAL_INS_REM_DET	Read register description above
5	MBHC_BUTTON_PRESS_DET	Read register description above
4	MBHC_BUTTON_RELEASE_DET	Read register description above
3	MBHC_MIC_ELECTRICAL_INS_REM_DET1	Read register description above
2	D_CDC_SPKR_OCP_INT	Read register description above
1	D_CDC_SPKR_CLIP_INT	Read register description above
0	D_CDC_SPKR_CNP_INT	Read register description above

0x0001F013 CDC_D_INT_POLARITY_LOW

Type: R
Clock: PBUS_WRCLK
Reset State: 0x00
Reset Name: perph_rb

1 = Interrupt will trigger on a level low (falling edge) event, 0 = level low triggering is disabled

CDC_D_INT_POLARITY_LOW

Bits	Name	Description
7	MBHC_SWITCH_INT	Read register description above
6	MBHC_MIC_ELECTRICAL_INS_REM_DET	Read register description above
5	MBHC_BUTTON_PRESS_DET	Read register description above
4	MBHC_BUTTON_RELEASE_DET	Read register description above
3	MBHC_MIC_ELECTRICAL_INS_REM_DET1	Read register description above
2	D_CDC_SPKR_OCP_INT	Read register description above
1	D_CDC_SPKR_CLIP_INT	Read register description above
0	D_CDC_SPKR_CNP_INT	Read register description above

0x0001F014 CDC_D_INT_LATCHED_CLR

Type: W
Clock: PBUS_WRCLK
Reset State: 0x00
Reset Name: perph_rb

1 = rearms the interrupt when an interrupt is pending. It clears the internal sticky and sent bits

0 = has no effect

CDC_D_INT_LATCHED_CLR

Bits	Name	Description
7	MBHC_SWITCH_INT	Read register description above
6	MBHC_MIC_ELECTRICAL_INS_REM_DET	Read register description above
5	MBHC_BUTTON_PRESS_DET	Read register description above
4	MBHC_BUTTON_RELEASE_DET	Read register description above
3	MBHC_MIC_ELECTRICAL_INS_REM_DET1	Read register description above
2	D_CDC_SPKR_OCP_INT	Read register description above
1	D_CDC_SPKR_CLIP_INT	Read register description above
0	D_CDC_SPKR_CNP_INT	Read register description above

0x0001F015 CDC_D_INT_EN_SET

Type: RW
Clock: PBUS_WRCLK
Reset State: 0x00
Reset Name: perph_rb

writing '0' to this register has no effect. Writing a '1' will enable the corresponding interrupt. Reading this register will readback enable status

PMIC_SET_MASK

CDC_D_INT_EN_SET

Bits	Name	Description
7	MBHC_SWITCH_INT	Read register description above
6	MBHC_MIC_ELECTRICAL_INS_REM_DET	Read register description above
5	MBHC_BUTTON_PRESS_DET	Read register description above
4	MBHC_BUTTON_RELEASE_DET	Read register description above
3	MBHC_MIC_ELECTRICAL_INS_REM_DET1	Read register description above
2	D_CDC_SPKR_OCP_INT	Read register description above
1	D_CDC_SPKR_CLIP_INT	Read register description above
0	D_CDC_SPKR_CNP_INT	Read register description above

0x0001F016 CDC_D_INT_EN_CLR

Type: RW
Clock: PBUS_WRCLK
Reset State: 0x00
Reset Name: perph_rb

Writing '0' to this register has no effect. Writing a '1' will disable the corresponding interrupt. Reading this register will readback enable status

PMIC_CLR_MASK=INT_EN_SET

CDC_D_INT_EN_CLR

Bits	Name	Description
7	MBHC_SWITCH_INT	Read register description above
6	MBHC_MIC_ELECTRICAL_INS_REM_DET	Read register description above
5	MBHC_BUTTON_PRESS_DET	Read register description above
4	MBHC_BUTTON_RELEASE_DET	Read register description above
3	MBHC_MIC_ELECTRICAL_INS_REM_DET1	Read register description above
2	D_CDC_SPKR_OCP_INT	Read register description above
1	D_CDC_SPKR_CLIP_INT	Read register description above
0	D_CDC_SPKR_CNP_INT	Read register description above

0x0001F018 CDC_D_INT_LATCHED_STS

Type: R
Clock: PBUS_WRCLK
Reset State: 0x00
Reset Name: n/a

Latched (Sticky) Interrupt. '1' indicates that the interrupt has triggered. Once the latched bit is set it can only be cleared by writing the clear bit.

CDC_D_INT_LATCHED_STS

Bits	Name	Description
7	MBHC_SWITCH_INT	
6	MBHC_MIC_ELECTRICAL_INS_REM_DET	
5	MBHC_BUTTON_PRESS_DET	
4	MBHC_BUTTON_RELEASE_DET	
3	MBHC_MIC_ELECTRICAL_INS_REM_DET1	
2	D_CDC_SPKR_OCP_INT	

CDC_D_INT_LATCHED_STS (cont.)

Bits	Name	Description
1	D_CDC_SPKR_CLIP_INT	
0	D_CDC_SPKR_CNP_INT	

0x0001F019 CDC_D_INT_PENDING_STS

Type: R
Clock: PBUS_WRCLK
Reset State: 0x00
Reset Name: n/a

Debug: Pending is set if interrupt has been sent but not cleared.

CDC_D_INT_PENDING_STS

Bits	Name	Description
7	MBHC_SWITCH_INT	
6	MBHC_MIC_ELECTRICAL_INS_REM_DET	
5	MBHC_BUTTON_PRESS_DET	
4	MBHC_BUTTON_RELEASE_DET	
3	MBHC_MIC_ELECTRICAL_INS_REM_DET1	
2	D_CDC_SPKR_OCP_INT	
1	D_CDC_SPKR_CLIP_INT	
0	D_CDC_SPKR_CNP_INT	

0x0001F01A CDC_D_INT_MID_SEL

Type: RW
Clock: PBUS_WRCLK
Reset State: 0x00
Reset Name: perph_rb

Selects the MID that will receive the interrupt

CDC_D_INT_MID_SEL

Bits	Name	Description
1:0	INT_MID_SEL	indicates ID of the master which is supposed to process the interrupt

0x0001F01B CDC_D_INT_PRIORITY

Type: RW
Clock: PBUS_WRCLK
Reset State: 0x00
Reset Name: perph_rb

Choosing priority type - SR or A

CDC_D_INT_PRIORITY

Bits	Name	Description
0	INT_PRIORITY	Writing 0 selects SR priority, writing 1 selects A priority.

0x0001F040 CDC_D_GPIO_MODE

Type: RW
Clock: PBUS_WRCLK
Reset State: 0x00
Reset Name: perph_rb

These register bits for GPIO test

0 : Pad shall be in functional mode

1 : Pad shall be in debug test

CDC_D_GPIO_MODE

Bits	Name	Description
0	TEST_MODE	GPIO test mode for the cdc_pdm_tx pad testing 0x0: DISABLE 0x1: ENABLE

0x0001F041 CDC_D_PIN_CTL_OE

Type: RW
Clock: PBUS_WRCLK
Reset State: 0x01
Reset Name: perph_rb

The register bit will enable the tri-state ouput pad in pad test (GPIO_MODE enable). The behaviour of the bit is as below.

0x0 : Disable output pad

0x1 : Enable output pad

CDC_D_PIN_CTL_OE

Bits	Name	Description
0	PIN_CTL_OE0	Output enable for the cdc_pdm_tx0 pad 0x0: DISABLE 0x1: ENABLE

0x0001F042 CDC_D_PIN_CTL_DATA

Type: RW
Clock: PBUS_WRCLK
Reset State: 0x00
Reset Name: perph_rb

This register bit in conjunction with corresponding PIN_CTL_OE register bit, provide the value that the pad will be driven to during pad test. If corresponding PIN_CTL_OE bit = 1 then:

When CTL_DATA0 = 1 , Pad = 1

When CTL_DATA0 = 0, Pad = 0

CDC_D_PIN_CTL_DATA

Bits	Name	Description
0	CTL_DATA0	Test_Data for the cdc_pdm_tx pad

0x0001F043 CDC_D_PIN_STATUS

Type: R
Clock: PBUS_WRCLK
Reset State: 0x00
Reset Name: n/a

These register bits contain the current state of the pads to allow software , read access during testing of the pads.

CDC_D_PIN_STATUS

Bits	Name	Description
4	PAD_STATUS4	State of the cdc_pdm_clk pad
3	PAD_STATUS3	State of the cdc_pdm_sync pad
2	PAD_STATUS2	State of the cdc_pdm_rx2 pad
1	PAD_STATUS1	State of the cdc_pdm_rx1 pad
0	PAD_STATUS0	State of the cdc_pdm_rx0 pad

0x0001F044 CDC_D_HDRIVE_CTL

Type: RW
Clock: PBUS_WRCLK
Reset State: 0x00
Reset Name: perph_rb

PDM Buffer Drive Strength Configuration

CDC_D_HDRIVE_CTL

Bits	Name	Description
1:0	HDRIVE_CTL	0x0: LOW10PF 0x1: MID20PF 0x2: HIGH40PF 0x3: VERYHIGH50PF

0x0001F046 CDC_D_CDC_RST_CTL

Type: RW
Clock: PBUS_WRCLK
Reset State: 0x00
Reset Name: perph_rb

CDC_D_CDC_RST_CTL

Bits	Name	Description
7	DIG_SW_RST_N	CDC_DIG_RST_N (active low) is AND with System Reset to generate the Digital core reset. 0x0: RESET 0x1: REMOVE_RESET

0x0001F048 CDC_D_CDC_TOP_CLK_CTL

Type: RW
Clock: PBUS_WRCLK
Reset State: 0x00
Reset Name: perph_rb

Top Clock Control Register. This register enables or disables the registers in the Main Clock Domains

CDC_D_CDC_TOP_CLK_CTL

Bits	Name	Description
3	A_MCLK2_EN	Specifies Analog MCLK Div by 2 Clock EnableState 0x0: DISABLE 0x1: ENABLE

CDC_D_CDC_TOP_CLK_CTL (cont.)

Bits	Name	Description
2	A_MCLK_EN	Specifies Analog MCLK Clock EnableState 0x0: DISABLE 0x1: ENABLE

0x0001F049 CDC_D_CDC_ANA_CLK_CTL

Type: RW
Clock: PBUS_WRCLK
Reset State: 0x00
Reset Name: perph_rb

RX Analog Path Clock Control Register. This register enables clocks to Analog RX domains.

CDC_D_CDC_ANA_CLK_CTL

Bits	Name	Description
5	TXA_CLK25_EN	Specifies TX0 and Tx1 Analog Path Clock Enable State 0x0: DISABLE 0x1: ENABLE
4	SPKR_CLK_EN	Specifies RX4 Analog Path Clock Enable State 0x0: DISABLE 0x1: ENABLE
1	EAR_HPHL_CLK_EN	Specifies RX1 Analog Path Clock Enable State 0x0: DISABLE 0x1: ENABLE
0	EAR_HPHR_CLK_EN	Specifies RX0 Analog Path Clock Enable State 0x0: DISABLE 0x1: ENABLE

0x0001F04A CDC_D_CDC_DIG_CLK_CTL

Type: RW
Clock: PBUS_WRCLK
Reset State: 0x00
Reset Name: perph_rb

This register enables clocks to all of the main digital data paths

CDC_D_CDC_DIG_CLK_CTL

Bits	Name	Description
7	RXD_PDM_CLK_EN	Specifies RXD_PDM Digital Path Clock Enable State 0x0: DISABLE 0x1: ENABLE
6	NCP_CLK_EN	Specifies NCP Digital Path Clock Enable State 0x0: DISABLE 0x1: ENABLE
5	BOOST_CLK_EN	Specifies BOOST Digital Path Clock Enable State 0x0: DISABLE 0x1: ENABLE
4	TXD_CLK_EN	Specifies TX Digital Path Clock Enable State 0x0: DISABLE 0x1: ENABLE
3	D_MBHC_CLK_EN	Specifies Digital MBHC Clock EnableState 0x0: DISABLE 0x1: ENABLE
2	RXD3_CLK_EN	Specifies RX3 Digital Path Clock Enable State 0x0: DISABLE 0x1: ENABLE
1	RXD2_CLK_EN	Specifies RX2 Digital Path Clock Enable State 0x0: DISABLE 0x1: ENABLE
0	RXD1_CLK_EN	Specifies RX1 Digital Path Clock Enable State 0x0: DISABLE 0x1: ENABLE

0x0001F050 CDC_D_CDC_CONN_TX1_CTL

Type: RW
Clock: PBUS_WRCLK
Reset State: 0x02
Reset Name: perph_rb

CDC_D_CDC_CONN_TX1_CTL

Bits	Name	Description
1:0	SERIAL_TX1_MUX	Configures connectivity mux, to choose the input to serializer in the TX1 path 0x0: ADC_1 0x0: ADC_1 0x1: RX_PDM_LB 0x2: ZERO

0x0001F051 CDC_D_CDC_CONN_TX2_CTL

Type: RW
Clock: PBUS_WRCLK
Reset State: 0x02
Reset Name: perph_rb

CDC_D_CDC_CONN_TX2_CTL

Bits	Name	Description
1:0	SERIAL_TX2_MUX	Configures connectivity mux, to choose the input to serializer in the TX2 path 0x0: ADC_2 0x1: RX_PDM_LB 0x2: ZERO

0x0001F052 CDC_D_CDC_CONN_HPHR_DAC_CTL

Type: RW
Clock: PBUS_WRCLK
Reset State: 0x00
Reset Name: perph_rb

CDC_D_CDC_CONN_HPHR_DAC_CTL

Bits	Name	Description
0	RX_SEL	Configures connectivity mux, to choose the input to HPHR DAC input path. 0x0: RX1 0x1: RX2

0x0001F053 CDC_D_CDC_CONN_RX1_CTL

Type: RW
Clock: PBUS_WRCLK
Reset State: 0x00
Reset Name: perph_rb

CDC_D_CDC_CONN_RX1_CTL

Bits	Name	Description
1:0	RX1_INP_SEL	Configures connectivity mux, to choose the serial input to the deserializer in the RX1 input path. 0x0: RX1 0x1: TX_LB_ADC1 0x2: TX_LB_ADC2

0x0001F054 CDC_D_CDC_CONN_RX2_CTL

Type: RW
Clock: PBUS_WRCLK
Reset State: 0x00
Reset Name: perph_rb

CDC_D_CDC_CONN_RX2_CTL

Bits	Name	Description
1:0	RX2_INP_SEL	Configures connectivity mux, to choose the serial input to the deserializer in the RX2 input path. 0x0: RX2 0x1: TX_LB_ADC1 0x2: TX_LB_ADC2

0x0001F055 CDC_D_CDC_CONN_RX3_CTL

Type: RW
Clock: PBUS_WRCLK
Reset State: 0x00
Reset Name: perph_rb

CDC_D_CDC_CONN_RX3_CTL

Bits	Name	Description
1:0	RX3_INP_SEL	Configures connectivity mux, to choose the serial input to the deserializer in the RX3 input path. 0x0: RX3 0x1: TX_LB_ADC1 0x2: TX_LB_ADC2

0x0001F056 CDC_D_CDC_CONN_RX_LB_CTL

Type: RW
Clock: PBUS_WRCLK
Reset State: 0x00
Reset Name: perph_rb

CDC_D_CDC_CONN_RX_LB_CTL

Bits	Name	Description
1:0	RX_LB_SEL	Configures connectivity mux, to choose loopback rx fir data. 0x0: RX1_FIR_DATA 0x1: RX2_FIR_DATA 0x2: RX3_FIR_DATA

0x0001F058 CDC_D_CDC_RX_CTL1

Type: RW
Clock: PBUS_WRCLK
Reset State: 0x7C
Reset Name: perph_rb

CDC_D_CDC_RX_CTL1

Bits	Name	Description
6	DEM_DITHER_ENABLE	When set to 1 , enables Dither bits generation, defaults to 1 0x0: DISABLE 0x1: ENABLE
5	DEM_MID_ENABLE	When set to 1 , enables Mid bits generation, defaults to 1 0x0: DISABLE 0x1: ENABLE
4	DEM_MOD_SWITCHING_-BLOCK_ENABLE	When set to 1 , enables Modified Switching Block (S41), defaults to 1 0x0: DISABLE 0x1: ENABLE
3	DEM_SWITCHING_-BLOCK_ENABLE	When set to 1 , enables Switching Block, defaults to 1 0x0: DISABLE 0x1: ENABLE
2	DEM_SEGMENTING_-BLOCK_ENABLE	When set to 1 , enables Segmenting Block, defaults to 1 0x0: DISABLE 0x1: ENABLE
1	DEM_BYPASS	DEM bypass test data (26 bits) is defined by the 4 DEM_BYPASS_DATA registers , described later in this document. 0x0: NO_BYPASS 0x1: BYPASS
0	FIR_BYPASS	When set = 1, enables the bypass of the FIR filter. Only lower 4 bits of 9 bit output will be non zero. Default to 0. 0x0: NO_BYPASS 0x1: BYPASS

0x0001F059 CDC_D_CDC_RX_CTL2

Type: RW
Clock: PBUS_WRCLK
Reset State: 0x7C
Reset Name: perph_rb

CDC_D_CDC_RX_CTL2

Bits	Name	Description
6	DEM_DITHER_ENABLE	When set to 1 , enables Dither bits generation, defaults to 1 0x0: DISABLE 0x1: ENABLE
5	DEM_MID_ENABLE	When set to 1 , enables Mid bits generation, defaults to 1 0x0: DISABLE 0x1: ENABLE
4	DEM_MOD_SWITCHING_-BLOCK_ENABLE	When set to 1 , enables Modified Switching Block (S41), defaults to 1 0x0: DISABLE 0x1: ENABLE
3	DEM_SWITCHING_-BLOCK_ENABLE	When set to 1 , enables Switching Block, defaults to 1 0x0: DISABLE 0x1: ENABLE
2	DEM_SEGMENTING_-BLOCK_ENABLE	When set to 1 , enables Segmenting Block, defaults to 1 0x0: DISABLE 0x1: ENABLE
1	DEM_BYPASS	DEM bypass test data (26 bits) is defined by the 4 DEM_BYPASS_DATA registers , described later in this document. 0x0: NO_BYPASS 0x1: BYPASS
0	FIR_BYPASS	When set = 1, enables the bypass of the FIR filter. Only lower 4 bits of 9 bit output will be non zero. Default to 0. 0x0: NO_BYPASS 0x1: BYPASS

0x0001F05A CDC_D_CDC_RX_CTL3

Type: RW
Clock: PBUS_WRCLK
Reset State: 0x7C
Reset Name: perph_rb

CDC_D_CDC_RX_CTL3

Bits	Name	Description
6	DEM_DITHER_ENABLE	When set to 1 , enables Mid bits generation, defaults to 1 0x0: DISABLE 0x1: ENABLE
5	DEM_MID_ENABLE	When set to 1 , enables Dither bits generation, defaults to 1 0x0: DISABLE 0x1: ENABLE

CDC_D_CDC_RX_CTL3 (cont.)

Bits	Name	Description
4	DEM_MOD_SWITCHING_-BLOCK_ENABLE	When set to 1 , enables Modified Switching Block (S41), defaults to 1 0x0: DISABLE 0x1: ENABLE
3	DEM_SWITCHING_-BLOCK_ENABLE	When set to 1 , enables Switching Block, defaults to 1 0x0: DISABLE 0x1: ENABLE
2	DEM_SEGMENTING_-BLOCK_ENABLE	When set to 1 , enables Segmenting Block, defaults to 1 0x0: DISABLE 0x1: ENABLE
1	DEM_BYPASS	DEM bypass test data (26 bits) is defined by the 4 DEM_BYPASS_DATA registers , described later in this document. 0x0: NO_BYPASS 0x1: BYPASS
0	FIR_BYPASS	When set = 1, enables the bypass of the FIR filter. Only lower 4 bits of 9 bit output will be non zero. Default to 0. 0x0: NO_BYPASS 0x1: BYPASS

0x0001F05B CDC_D_DEM_BYPASS_DATA0

Type: RW
Clock: PBUS_WRCLK
Reset State: 0x00
Reset Name: perph_rb

CDC_D_DEM_BYPASS_DATA0

Bits	Name	Description
7:0	DEM_BYPASS_DATA0	Lowest 8 bits of 26 bit DEM output test data field for DEM bypass testing

0x0001F05C CDC_D_DEM_BYPASS_DATA1

Type: RW
Clock: PBUS_WRCLK
Reset State: 0x00
Reset Name: perph_rb

CDC_D_DEM_BYPASS_DATA1

Bits	Name	Description
7:0	DEM_BYPASS_DATA0	bits 8 to 15 of 26 bit DEM output test data field for DEM bypass testing

0x0001F05D CDC_D_DEM_BYPASS_DATA2

Type: RW
Clock: PBUS_WRCLK
Reset State: 0x00
Reset Name: perph_rb

CDC_D_DEM_BYPASS_DATA2

Bits	Name	Description
7:0	DEM_BYPASS_DATA0	bits 16 to 24 of 26 bit DEM output test data field for DEM bypass testing

0x0001F05E CDC_D_DEM_BYPASS_DATA3

Type: RW
Clock: PBUS_WRCLK
Reset State: 0x00
Reset Name: perph_rb

CDC_D_DEM_BYPASS_DATA3

Bits	Name	Description
1:0	DEM_BYPASS_DATA0	upper 2 bits of 26 bit DEM output test data field for DEM bypass testing

0x0001F068 RESERVED

74 CDC_A_CODEC_ANALOG

0x0001F100 CDC_A_REVISION1

Type: R
Clock: PBUS_WRCLK
Reset State: 0x00
Reset Name: n/a

HW Version Register [7:0]

PMIC_CONSTANT

CDC_A_REVISION1

Bits	Name	Description
7:0	DIG_MINOR	This number is incremented for digital change that is not intended to affect software or any change that adds a new feature but is backwards compatible with old software. Software changes may be required to take advantage of the new features. Minor resets to zero when Major increments.

0x0001F101 CDC_A_REVISION2

Type: R
Clock: PBUS_WRCLK
Reset State: 0x00
Reset Name: n/a

HW Version Register [15:8]

PMIC_CONSTANT

CDC_A_REVISION2

Bits	Name	Description
7:0	DIG_MAJOR	This number is incremented when changes are made to the digital HW that are not backwards compatible with existing software.

0x0001F102 CDC_A_REVISION3

Type: R
Clock: PBUS_WRCLK
Reset State: 0x01
Reset Name: n/a

HW Version Register [23:16]

CDC_A_REVISION3

Bits	Name	Description
7:0	ANA_MINOR	This number is incremented for analog change that is not intended to affect software or any change that adds a new feature but is backwards compatible with old software. Software changes may be required to take advantage of the new features. Minor resets to zero when Major increments.

0x0001F103 CDC_A_REVISION4

Type: R
Clock: PBUS_WRCLK
Reset State: 0x00
Reset Name: n/a

HW Version Register [31:24]

CDC_A_REVISION4

Bits	Name	Description
7:0	ANA_MAJOR	This number is incremented when changes are made to the analog HW that are not backwards compatible with existing software.

0x0001F104 CDC_A_PERPH_TYPE

Type: R
Clock: PBUS_WRCLK
Reset State: 0x23
Reset Name: n/a

Peripheral Type

PMIC_CONSTANT

CDC_A_PERPH_TYPE

Bits	Name	Description
7:0	TYPE	

0x0001F105 CDC_A_PERPH_SUBTYPE

Type: R
Clock: PBUS_WRCLK
Reset State: 0x09
Reset Name: n/a

Peripheral SubType

PMIC_CONSTANT

CDC_A_PERPH_SUBTYPE

Bits	Name	Description
7:0	SUBTYPE	

0x0001F110 CDC_A_INT_RT_STS

Type: R
Clock: PBUS_WRCLK
Reset State: 0x00
Reset Name: n/a

Interrupt Real Time Status Bits

CDC_A_INT_RT_STS

Bits	Name	Description
5	D_CDC_HPHL_CNP_INT	0 = 1 =
4	D_CDC_HPHR_CNP_INT	1 = 0 =
3	D_CDC_EAR_CNP_INT	1 = 0 =
2	D_CDC_HPHL_OCP_INT	1 = 0 =
1	D_CDC_HPHR_OCP_INT	1 = 0 =
0	D_CDC_EAR_OCP_INT	1 = 0 =

0x0001F111 CDC_A_INT_SET_TYPE

Type: R
Clock: PBUS_WRCLK
Reset State: 0x3F
Reset Name: perph_rb

0 = use level trigger interrupts, 1 = use edge trigger interrupts

CDC_A_INT_SET_TYPE

Bits	Name	Description
5	D_CDC_HPHL_CNP_INT	Read register description above
4	D_CDC_HPHR_CNP_INT	Read register description above
3	D_CDC_EAR_CNP_INT	Read register description above
2	D_CDC_HPHL_OCP_INT	Read register description above
1	D_CDC_HPHR_OCP_INT	Read register description above
0	D_CDC_EAR_OCP_INT	Read register description above

0x0001F112 CDC_A_INT_POLARITY_HIGH

Type: R
Clock: PBUS_WRCLK
Reset State: 0x3F
Reset Name: perph_rb

1 = Interrupt will trigger on a level high (rising edge) event, 0 = level high triggering is disabled

CDC_A_INT_POLARITY_HIGH

Bits	Name	Description
5	D_CDC_HPHL_CNP_INT	Read register description above
4	D_CDC_HPHR_CNP_INT	Read register description above
3	D_CDC_EAR_CNP_INT	Read register description above
2	D_CDC_HPHL_OCP_INT	Read register description above
1	D_CDC_HPHR_OCP_INT	Read register description above
0	D_CDC_EAR_OCP_INT	Read register description above

0x0001F113 CDC_A_INT_POLARITY_LOW

Type: R
Clock: PBUS_WRCLK
Reset State: 0x00
Reset Name: perph_rb

1 = Interrupt will trigger on a level low (falling edge) event, 0 = level low triggering is disabled

CDC_A_INT_POLARITY_LOW

Bits	Name	Description
5	D_CDC_HPHL_CNP_INT	Read register description above
4	D_CDC_HPHR_CNP_INT	Read register description above
3	D_CDC_EAR_CNP_INT	Read register description above
2	D_CDC_HPHL_OCP_INT	Read register description above
1	D_CDC_HPHR_OCP_INT	Read register description above
0	D_CDC_EAR_OCP_INT	Read register description above

0x0001F114 CDC_A_INT_LATCHED_CLR

Type: W
Clock: PBUS_WRCLK
Reset State: 0x00
Reset Name: perph_rb

1 = rearms the interrupt when an interrupt is pending. It clears the internal sticky and sent bits

0 = has no effect

CDC_A_INT_LATCHED_CLR

Bits	Name	Description
5	D_CDC_HPHL_CNP_INT	Read register description above
4	D_CDC_HPHR_CNP_INT	Read register description above
3	D_CDC_EAR_CNP_INT	Read register description above
2	D_CDC_HPHL_OCP_INT	Read register description above
1	D_CDC_HPHR_OCP_INT	Read register description above
0	D_CDC_EAR_OCP_INT	Read register description above

0x0001F115 CDC_A_INT_EN_SET

Type: RW
Clock: PBUS_WRCLK
Reset State: 0x00
Reset Name: perph_rb

writing '0' to this register has no effect. Writing a '1' will enable the corresponding interrupt. Reading this register will readback enable status

PMIC_SET_MASK

CDC_A_INT_EN_SET

Bits	Name	Description
5	D_CDC_HPHL_CNP_INT	Read register description above
4	D_CDC_HPHR_CNP_INT	Read register description above
3	D_CDC_EAR_CNP_INT	Read register description above
2	D_CDC_HPHL_OCP_INT	Read register description above
1	D_CDC_HPHR_OCP_INT	Read register description above
0	D_CDC_EAR_OCP_INT	Read register description above

0x0001F116 CDC_A_INT_EN_CLR

Type: RW
Clock: PBUS_WRCLK
Reset State: 0x00
Reset Name: perph_rb

writing '0' to this register has no effect. Writing a '1' will disable the corresponding interrupt. Reading this register will readback enable status

PMIC_CLR_MASK=INT_EN_SET

CDC_A_INT_EN_CLR

Bits	Name	Description
5	D_CDC_HPHL_CNP_INT	Read register description above
4	D_CDC_HPHR_CNP_INT	Read register description above
3	D_CDC_EAR_CNP_INT	Read register description above
2	D_CDC_HPHL_OCP_INT	Read register description above
1	D_CDC_HPHR_OCP_INT	Read register description above
0	D_CDC_EAR_OCP_INT	Read register description above

0x0001F118 CDC_A_INT_LATCHED_STS

Type: R
Clock: PBUS_WRCLK
Reset State: 0x00
Reset Name: n/a

Latched (Sticky) Interrupt. '1' indicates that the interrupt has triggered. Once the latched bit is set it can only be cleared by writing the clear bit.

CDC_A_INT_LATCHED_STS

Bits	Name	Description
5	D_CDC_HPHL_CNP_INT	Read register description above
4	D_CDC_HPHR_CNP_INT	Read register description above
3	D_CDC_EAR_CNP_INT	Read register description above
2	D_CDC_HPHL_OCP_INT	Read register description above
1	D_CDC_HPHR_OCP_INT	Read register description above
0	D_CDC_EAR_OCP_INT	Read register description above

0x0001F119 CDC_A_INT_PENDING_STS

Type: R
Clock: PBUS_WRCLK
Reset State: 0x00
Reset Name: n/a

Debug: Pending is set if interrupt has been sent but not cleared.

CDC_A_INT_PENDING_STS

Bits	Name	Description
5	D_CDC_HPHL_CNP_INT	Read register description above
4	D_CDC_HPHR_CNP_INT	Read register description above
3	D_CDC_EAR_CNP_INT	Read register description above
2	D_CDC_HPHL_OCP_INT	Read register description above
1	D_CDC_HPHR_OCP_INT	Read register description above
0	D_CDC_EAR_OCP_INT	Read register description above

0x0001F11A CDC_A_INT_MID_SEL

Type: RW
Clock: PBUS_WRCLK
Reset State: 0x00
Reset Name: perph_rb

Selects the MID that will receive the interrupt

CDC_A_INT_MID_SEL

Bits	Name	Description
1:0	INT_MID_SEL	indicates ID of the master which is supposed to process the interrupt

0x0001F11B CDC_A_INT_PRIORITY

Type: RW
Clock: PBUS_WRCLK
Reset State: 0x00
Reset Name: perph_rb

Choosing priority type - SR or A

CDC_A_INT_PRIORITY

Bits	Name	Description
0	INT_PRIORITY	

0x0001F140 CDC_A_MICB_1_EN

Type: RW
Clock: PBUS_WRCLK
Reset State: 0x00
Reset Name: perph_rb

CDC_A_MICB_1_EN

Bits	Name	Description
7	MICB_EN	0x0: DISABLE 0x1: ENABLE
6	CAP_MODE	0x0: EXT_BYP_CAP 0x1: NO_EXT_BYP_CAP
5	PULL_DOWN_EN	0x0: DISABLE 0x1: ENABLE

CDC_A_MICB_1_EN (cont.)

Bits	Name	Description
4	PULL_UP_EN	0x0: DISABLE 0x1: ENABLE
3:1	OPA_STG3_TAIL_CURR	0x0: I_30_UA 0x1: I_45_UA 0x2: I_60_UA 0x3: I_75_UA 0x4: I_90_UA 0x5: I_105_UA 0x6: I_120_UA 0x7: I_135_UA
0	TX3N_GND_SEL	0x0: TX_GND 0x1: HPH_REF

0x0001F141 CDC_A_MICB_1_VAL

Type: RW
Clock: PBUS_WRCLK
Reset State: 0x20
Reset Name: perph_rb

CDC_A_MICB_1_VAL

Bits	Name	Description
7:3	MICB_OUT_VAL	0x0: V1P60V 0x1: V1P65V 0x2: V1P70V 0x3: V1P75V 0x4: V1P80V 0x5: V1P85V 0x6: V1P90V 0x7: V1P95V 0x8: V2P00V 0x9: V2P05V 0xA: V2P10V 0xB: V2P15V 0xC: V2P20V 0xD: V2P25V 0xE: V2P30V 0xF: V2P35V 0x10: V2P40V 0x11: V2P45 0x12: V2P50V 0x13: V2P55V 0x14: V2P60V

CDC_A_MICB_1_VAL (cont.)

Bits	Name	Description
		0x15: V2P65V 0x16: V2P70V 0x17: V2P75V 0x18: V2P80V 0x19: V2P85V
2:1	IFILT_RES_VAL	0x0: R_3600M_OHM 0x1: R_1800M_OHM 0x2: R_1200M_OHM 0x3: R_900M_OHM
0	MICB_P-WR_SWCH_OVRD_EN	0x0: AUTO 0x1: VDD_MIC_BIAS

0x0001F142 CDC_A_MICB_1_CTL

Type: RW
Clock: PBUS_WRCLK
Reset State: 0x00
Reset Name: perph_rb

CDC_A_MICB_1_CTL

Bits	Name	Description
7	REF_OPA_EN	0x0: DISABLE 0x1: ENABLE
6	INT_PRECHRG_BYP	0x0: INT_PRECHRG_SEL 0x1: EXT_PRECHRG_SEL
5	EXT_PRECHRG_EN	0x0: DISABLE 0x1: ENABLE
4:2	RESERVED	Reserved
1	CFILT_REF_SEL	0x0: CDC_GND_CFILT 0x1: HPH_REF
0	PLUG_PNP_OVRD	0x0: ENABLE 0x1: DISABLE

0x0001F143 CDC_A_MICB_1_INT_RBIAS

Type: RW
Clock: PBUS_WRCLK
Reset State: 0x49
Reset Name: perph_rb

CDC_A_MICB_1_INT_RBIAS

Bits	Name	Description
7	TX1_INT_RBIAS_EN	0x0: DISABLE 0x1: ENABLE
6	TX1N_INT_PULLUP_EN	0x0: TX1N_TO_GND 0x1: TX1N_TO_MBIAS
5	TX1N_GND_SEL	0x0: TX_GND 0x1: HPH_REF
4	TX2_INT_RBIAS_EN	0x0: DISABLE 0x1: ENABLE
3	TX2N_INT_PULLUP_EN	0x0: TX2N_TO_GND 0x1: TX2N_TO_MBIAS
2	TX2N_GND_SEL	0x0: TX_GND 0x1: HPH_REF
1	TX3_INT_RBIAS_EN	0x0: DISABLE 0x1: ENABLE
0	TX3_INT_PULLUP_EN	0x0: TX2N_TO_GND 0x1: TX2N_TO_MBIAS

0x0001F144 CDC_A_MICB_2_EN

Type: RW
Clock: PBUS_WRCLK
Reset State: 0x20
Reset Name: perph_rb

CDC_A_MICB_2_EN

Bits	Name	Description
7	MICB_EN	0x0: DISABLE 0x1: ENABLE
6	PULL_UP_EN	0x0: DISABLE 0x1: ENABLE
5	PULL_DOWN_EN	0x0: DISABLE 0x1: ENABLE
4:3	MBHC_AZ_CTL	0x0: DEFAULT_AZ_EQ_MICB_EN_B 0x1: DISABLE_AZ 0x2: ENABLE_AZ

0x0001F145 RESERVED

0x0001F146 CDC_A_MASTER_BIAS_CTL

Type: RW
Clock: PBUS_WRCLK
Reset State: 0x00
Reset Name: perph_rb

CDC_A_MASTER_BIAS_CTL

Bits	Name	Description
5	MASTER_BIAS_EN	0x0: DISABLE 0x1: ENABLE
4	V2I_BUFFER_EN	0x0: DISABLE 0x1: ENABLE
3:2	ATEST_TRIM_CTL	0x0: TRIM_TO_CODEC 0x1: TRIM_TO_ATEST 0x2: ATEST_TO_CODEC
1	ATEST_RPOLY_CTL	0x0: RPOLY_TO_CODEC 0x1: RPOLY_TO_ATEST
0	SPKR_BIAS	0x0: IPOLY 0x1: ITRIM

0x0001F147 CDC_A_MBHC_DET_CTL_1

Type: RW
Clock: PBUS_WRCLK
Reset State: 0x35
Reset Name: perph_rb

CDC_A_MBHC_DET_CTL_1

Bits	Name	Description
7	L_DET_EN	0x0: DISABLE 0x1: ENABLE
6	GND_DET_EN	0x0: DISABLE 0x1: ENABLE
5	MECH_DETECTION_TYPE	0x0: REMOVAL 0x1: INSERTION
4:3	MIC_CLAMP_CTL	0x0: MANUAL_CONTROL_CLAMP_OFF 0x1: MANUAL_CONTROL_CLAMP_ON 0x2: AUTOMATIC_CONTROL_CLAMP_MIC
2	MBHC_BIAS_EN	0x0: DISABLE 0x1: ENABLE
1	ZDET_LEGACY_EN	0x0: RAMP 0x1: LEGACY

CDC_A_MBHC_DET_CTL_1 (cont.)

Bits	Name	Description
0	ELECT_DETECTION_TYPE	0x0: REMOVAL 0x1: INSERTION

0x0001F150 CDC_A_MBHC_DET_CTL_2

Type: RW
Clock: PBUS_WRCLK
Reset State: 0x08
Reset Name: perph_rb

CDC_A_MBHC_DET_CTL_2

Bits	Name	Description
7:6	HS_L_DET_PULL_UP_C-TRL	0x0: OFF 0x1: I_IP0_UA 0x2: I_2P0_UA 0x3: I_3P0_UA
5	HS_L_DET_COMPARA-TOR_CTRL	0x0: OFF 0x1: V_0P9_VDD
4	HPHL_PLUG_TYPE	0x0: NC 0x1: NO
3	GND_PLUG_TYPE	0x0: NC 0x1: NO
2:1	ELECT_SCHMT_ISRC_C-TRL	0x0: DISABLE_ALL 0x1: ENABLE_MIC_HPHL_HPHR 0x2: ENABLE_HPHL_HPHR 0x3: ENABLE_MIC_HPHL
0	SW_H-PH_LP_100K_TO_GND	0x0: DISABLE 0x1: ENABLE

0x0001F151 CDC_A_MBHC_FSM_CTL

Type: RW
Clock: PBUS_WRCLK
Reset State: 0x00
Reset Name: perph_rb

CDC_A_MBHC_FSM_CTL

Bits	Name	Description
7	MBHC_FSM_EN	0x0: DISABLE 0x1: ENABLE

CDC_A_MBHC_FSM_CTL (cont.)

Bits	Name	Description
6:4	BTN_ISRC_CTRL	0x0: OFF 0x1: I_50_UA 0x2: I_75_UA 0x3: I_100_UA 0x4: I_125_UA 0x5: I_150_UA 0x6: I_175_UA 0x7: I_200_UA
3	ZDET_L_MEAS_EN	0x0: DISABLE 0x1: ENABLE
2	ZDET_R_MEAS_EN	0x0: DISABLE 0x1: ENABLE
1	ZDET_CHG	0x0: DISCHG 0x1: CHG
0	ZDET_DISCHG_CAP_CTL	0x0: DISABLE 0x1: ENABLE

0x0001F152 CDC_A_MBHC_DBNC_TIMER

Type: RW
Clock: PBUS_WRCLK
Reset State: 0x98
Reset Name: perph_rb

CDC_A_MBHC_DBNC_TIMER

Bits	Name	Description
7:4	INSREM_DBNC	0x0: T_0_MS 0x1: T_8_MS 0x2: T_16_MS 0x3: T_32_MS 0x4: T_48_MS 0x5: T_64_MS 0x6: T_96_MS 0x7: T_128_MS 0x8: T_192_MS 0x9: T_256_MS 0xA: T_384_MS 0xB: T_512_MS 0xC: T_768_MS 0xD: T_1024_MS 0xE: T_1536_MS 0xF: T_2048_MS

CDC_A_MBHC_DBNC_TIMER (cont.)

Bits	Name	Description
3:2	BTN_DBNC	0x0: T_0_MS 0x1: T_8_MS 0x2: T_16_MS 0x3: T_32_MS
1	ZDET_DISCHG_- FAST_RAMP_CTL	0x0: FAST_RAMP 0x1: NOM_RAMP
0	MBHC_ATEST	0x1: COMP_OUT

0x0001F153 CDC_A_MBHC_BTN_ZDET_CTL_0

Type: RW
Clock: PBUS_WRCLK
Reset State: 0x00
Reset Name: perph_rb

CDC_A_MBHC_BTN_ZDET_CTL_0

Bits	Name	Description
7:5	BTN0_VREF_COARSE	0x0: V_0_MV 0x1: V_100_MV 0x2: V_200_MV 0x3: V_300_MV 0x4: V_400_MV 0x5: V_500_MV 0x6: V_600_MV 0x7: V_700_MV
4:2	BTN0_VREF_FINE	0x0: V_0P0_MV 0x1: V_12P5_MV 0x2: V_25P0_MV 0x3: V_37P5_MV 0x4: V_50P0_MV 0x5: V_62P5_MV 0x6: V_75P0_MV 0x7: V_87P5_MV
1	ZDET_CONN_RAMP_L	0x0: DISCONNECT 0x1: CONNECT
0	ZDET_CONN_RAMP_R	0x0: DISCONNECT 0x1: CONNECT

0x0001F154 CDC_A_MBHC_BTN_ZDET_CTL_1

Type: RW
Clock: PBUS_WRCLK
Reset State: 0x20
Reset Name: perph_rb

CDC_A_MBHC_BTN_ZDET_CTL_1

Bits	Name	Description
7:5	BTN1_VREF_COARSE	0x0: V_0_MV 0x1: V_100_MV 0x2: V_200_MV 0x3: V_300_MV 0x4: V_400_MV 0x5: V_500_MV 0x6: V_600_MV 0x7: V_700_MV
4:2	BTN1_VREF_FINE	0x0: V_0P0_MV 0x1: V_12P5_MV 0x2: V_25P0_MV 0x3: V_37P5_MV 0x4: V_50P0_MV 0x5: V_62P5_MV 0x6: V_75P0_MV 0x7: V_87P5_MV
1	ZDET_CONN_FIXED_L	0x0: DISCONNECT 0x1: CONNECT
0	ZDET_CONN_FIXED_R	0x0: DISCONNECT 0x1: CONNECT

0x0001F155 CDC_A_MBHC_BTN_ZDET_CTL_2

Type: RW
Clock: PBUS_WRCLK
Reset State: 0x40
Reset Name: perph_rb

CDC_A_MBHC_BTN_ZDET_CTL_2

Bits	Name	Description
7:5	BTN2_VREF_COARSE	0x0: V_0_MV 0x1: V_100_MV 0x2: V_200_MV 0x3: V_300_MV 0x4: V_400_MV 0x5: V_500_MV 0x6: V_600_MV 0x7: V_700_MV
4:2	BTN2_VREF_FINE	0x0: V_0P0_MV 0x1: V_12P5_MV 0x2: V_25P0_MV 0x3: V_37P5_MV 0x4: V_50P0_MV 0x5: V_62P5_MV 0x6: V_75P0_MV 0x7: V_87P5_MV
1	ZDET_RAMP_CAP_CTL	0x0: AUTO_SWITCH_CAP 0x1: MANUAL_SWITCH_CAP
0	ZDET_RAMP_RATE_CTL	0x0: R_1P0X_RAMP_RATE 0x1: R_1P2X_RAMP_RATE

0x0001F156 CDC_A_MBHC_BTN3_CTL

Type: RW
Clock: PBUS_WRCLK
Reset State: 0x61
Reset Name: perph_rb

CDC_A_MBHC_BTN3_CTL

Bits	Name	Description
7:5	BTN3_VREF_COARSE	0x0: V_0_MV 0x1: V_100_MV 0x2: V_200_MV 0x3: V_300_MV 0x4: V_400_MV 0x5: V_500_MV 0x6: V_600_MV 0x7: V_700_MV

CDC_A_MBHC_BTN3_CTL (cont.)

Bits	Name	Description
4:2	BTN3_VREF_FINE	0x0: V_0P0_MV 0x1: V_12P5_MV 0x2: V_25P0_MV 0x3: V_37P5_MV 0x4: V_50P0_MV 0x5: V_62P5_MV 0x6: V_75P0_MV 0x7: V_87P5_MV
1:0	HS_VREF	0x0: V_1P4_V 0x1: V_1P5_V 0x2: V_1P6_V 0x3: V_1P7_V

0x0001F157 CDC_A_MBHC_BTN4_CTL

Type: RW
Clock: PBUS_WRCLK
Reset State: 0x80
Reset Name: perph_rb

CDC_A_MBHC_BTN4_CTL

Bits	Name	Description
7:5	BTN4_VREF_COARSE	0x0: V_0_MV 0x1: V_100_MV 0x2: V_200_MV 0x3: V_300_MV 0x4: V_400_MV 0x5: V_500_MV 0x6: V_600_MV 0x7: V_700_MV
4:2	BTN4_VREF_FINE	0x0: V_0P0_MV 0x1: V_12P5_MV 0x2: V_25P0_MV 0x3: V_37P5_MV 0x4: V_50P0_MV 0x5: V_62P5_MV 0x6: V_75P0_MV 0x7: V_87P5_MV
1:0	RESERVED	Reserved

0x0001F158 CDC_A_MBHC_RESULT_1

Type: R
Clock: PBUS_WRCLK
Reset State: 0x00
Reset Name: perph_rb

CDC_A_MBHC_RESULT_1

Bits	Name	Description
5	ZDETB5_RESULT	0x0: COMP_LOW 0x1: COMP_HIGH
4	BTN4_ZDETB4_RESULT	0x0: COMP_LOW 0x1: COMP_HIGH
3	BTN3_ZDETB3_RESULT	0x0: COMP_LOW 0x1: COMP_HIGH
2	BTN2_ZDETB2_RESULT	0x0: COMP_LOW 0x1: COMP_HIGH
1	BTN1_ZDETB1_RESULT	0x0: COMP_LOW 0x1: COMP_HIGH
0	BTN0_ZDETB0_RESULT	0x0: COMP_LOW 0x1: COMP_HIGH

0x0001F159 CDC_A_MBHC_RESULT_2

Type: R
Clock: PBUS_WRCLK
Reset State: 0x00
Reset Name: perph_rb

CDC_A_MBHC_RESULT_2

Bits	Name	Description
7:5	RESERVED	
4	AUTO_CLAMP_CTL	0x0: AUTO_CLAMP_CTL_OFF 0x1: AUTO_CLAMP_CTL_ON
3	HPHL_SCHMT_RESULT	0x0: REMOVED 0x1: INSERTED
2	HPHR_SCHMT_RESULT	0x0: REMOVED 0x1: INSERTED
1	MIC_SCHMT_RESULT	0x0: REMOVED 0x1: INSERTED
0	HS_COMP_RESULT	0x0: COMP_LOW 0x1: COMP_HIGH

0x0001F160 CDC_A_TX_1_EN

Type: RW
Clock: PBUS_WRCLK
Reset State: 0x03
Reset Name: perph_rb

CDC_A_TX_1_EN

Bits	Name	Description
7	CH1_EN	0x0: DISABLE 0x1: ENABLE
6:3	CH1_GAIN	0x0: G_0_DB 0x2: G_6_DB 0x4: G_12_DB 0x6: G_18_DB 0x7: G_21_DB 0x8: G_24_DB
2:0	TXFE1_AAF2_CURR_CTL	0x0: I_1_NA 0x1: I_6_NA 0x2: I_11_NA 0x3: I_16_NA 0x4: I_21_NA 0x5: I_26_NA 0x6: I_31_NA 0x7: I_36_NA

0x0001F161 CDC_A_TX_2_EN

Type: RW
Clock: PBUS_WRCLK
Reset State: 0x03
Reset Name: perph_rb

CDC_A_TX_2_EN

Bits	Name	Description
7	CH2_EN	0x0: DISABLE 0x1: ENABLE
6:3	CH2_GAIN	0x0: G_0_DB 0x2: G_6_DB 0x4: G_12_DB 0x6: G_18_DB 0x7: G_21_DB 0x8: G_24_DB

CDC_A_TX_2_EN (cont.)

Bits	Name	Description
2:0	TXFE2_AAF2_CURR_CTL	0x0: I_1_NA 0x1: I_6_NA 0x2: I_11_NA 0x3: I_16_NA 0x4: I_21_NA 0x5: I_26_NA 0x6: I_31_NA 0x7: I_36_NA

0x0001F162 RESERVED

0x0001F163 RESERVED

0x0001F164 RESERVED

0x0001F165 CDC_A_TX_1_2_OPAMP_BIAS

Type: RW
Clock: PBUS_WRCLK
Reset State: 0x4B
Reset Name: perph_rb

CDC_A_TX_1_2_OPAMP_BIAS

Bits	Name	Description
7:5	ADC_INT1_OPAMP_BIAS	0x0: I_2_UA 0x1: I_3_UA 0x2: I_4_UA 0x3: I_5_UA 0x4: I_6_UA 0x5: I_7_UA 0x6: I_8_UA 0x7: I_9_UA
4:3	ADC_INT2_OPAMP_BIAS	0x0: I_0P5_UA 0x1: I_1_UA 0x2: I_1P5_UA 0x3: I_2_UA

CDC_A_TX_1_2_OPAMP_BIAS (cont.)

Bits	Name	Description
2:0	ADC_REF_BIAS	0x0: I_1_UA 0x1: I_1P5_UA 0x2: I_2_UA 0x3: I_2P5_UA 0x4: I_3_UA 0x5: I_3P5_UA 0x6: I_4_UA 0x7: I_4P5_UA

0x0001F166 CDC_A_TX_1_2_TXFE_CLKDIV

Type: RW
Clock: PBUS_WRCLK
Reset State: 0x51
Reset Name: perph_rb

CDC_A_TX_1_2_TXFE_CLKDIV

Bits	Name	Description
7:5	TXFE_1_2_CLK_DIV_RATIO_A1	0x0: DIV_BY_1 0x1: DIV_BY_2 0x2: DIV_BY_4 0x3: DIV_BY_8 0x4: DIV_BY_16 0x5: DIV_BY_32 0x6: DIV_BY_64 0x7: DIV_BY_128
4	TXFE_1_2_CLK_DIV_RATIO_A2	0x0: DIV_BY_1 0x1: DIV_BY_25
3:1	TXFE_1_2_CLK_DIV_RATIO_B1	0x0: DIV_BY_1 0x1: DIV_BY_2 0x2: DIV_BY_4 0x3: DIV_BY_8 0x4: DIV_BY_16 0x5: DIV_BY_32 0x6: DIV_BY_64 0x7: DIV_BY_128
0	TXFE_1_2_CLK_DIV_RATIO_B2	0x0: DIV_BY_1 0x1: DIV_BY_25

0x0001F167 CDC_A_TX_3_EN

Type: RW
Clock: PBUS_WRCLK
Reset State: 0x02
Reset Name: perph_rb

CDC_A_TX_3_EN

Bits	Name	Description
7	CH3_EN	0x0: DISABLE 0x1: ENABLE
6:3	CH3_GAIN	0x0: G_0_DB 0x2: G_6_DB 0x4: G_12_DB 0x6: G_18_DB 0x7: G_21_DB 0x8: G_24_DB
2:0	TXFE_1_2_OPAMP_CURR_CTL	0x0: I_1P5_UA 0x1: I_2P0_UA 0x2: I_2P5_UA 0x3: I_3P0_UA 0x4: I_3P5_UA 0x5: I_4P0_UA 0x6: I_4P5_UA 0x7: I_5P0_UA

0x0001F180 CDC_A_NCP_EN

Type: RW
Clock: PBUS_WRCLK
Reset State: 0x26
Reset Name: perph_rb

CDC_A_NCP_EN

Bits	Name	Description
5	NCP_CLIM_EN	0x0: DISABLE 0x1: ENABLE
4	NCP_BYPASS	0x1: BYPASS_NCP_GND 0x0: NO_BYPASS_NCP
3	FB_BYPASS	0x0: ENABLE_FB_LOOP 0x1: BYPASS_FB_LOOP
2	CURR_STARVE_EN	0x0: DISABLE 0x1: ENABLE

CDC_A_NCP_EN (cont.)

Bits	Name	Description
1	GLITCH_SUP_EN	0x0: DISABLE 0x1: ENABLE
0	NCP_EN	0x0: DISABLE 0x1: ENABLE

0x0001F181 CDC_A_NCP_CLK

Type: RW
Clock: PBUS_WRCLK
Reset State: 0x23
Reset Name: perph_rb

CDC_A_NCP_CLK

Bits	Name	Description
5	CLK_SEL	0x1: CODEC_MCLK 0x0: Reserved
4	CLK_INV	0x0: NON_INV_CLK 0x1: INVERTED_CLK
3:0	CLK_DIV	0x0: DIV_BY_2 0x1: DIV_BY_4 0x2: DIV_BY_6 0x3: DIV_BY_8 0x4: DIV_BY_10 0x5: DIV_BY_12 0x6: DIV_BY_14 0x7: DIV_BY_16 0x8: DIV_BY_18 0x9: DIV_BY_20 0xA: DIV_BY_22 0xB: DIV_BY_24 0xC: DIV_BY_26 0xD: DIV_BY_28 0xE: DIV_BY_30 0xF: DIV_BY_32

0x0001F182 CDC_A_NCP_DEGLITCH

Type: RW
Clock: PBUS_WRCLK
Reset State: 0x5B
Reset Name: perph_rb

CDC_A_NCP_DEGLITCH

Bits	Name	Description
7:6	IB_DG_CTRL	0x0: I_1_UA 0x1: I_2_UA 0x2: I_3_UA 0x3: I_4_UA
5:3	NON_TOVP_OUT	0x0: NON_OVP_TIME_7_NS 0x1: NON_OVP_TIME_12_NS 0x2: NON_OVP_TIME_17P5_NS 0x3: NON_OVP_TIME_22P8_NS 0x4: NON_OVP_TIME_28P9_NS 0x5: NON_OVP_TIME_34P6_NS 0x6: NON_OVP_TIME_40P8_NS 0x7: NON_OVP_TIME_46P8_NS
2:0	NON_TOVP_IN	0x0: NON_OVP_TIME_7_NS 0x1: NON_OVP_TIME_12_NS 0x2: NON_OVP_TIME_17P5_NS 0x3: NON_OVP_TIME_22P8_NS 0x4: NON_OVP_TIME_28P9_NS 0x5: NON_OVP_TIME_34P6_NS 0x6: NON_OVP_TIME_40P8_NS 0x7: NON_OVP_TIME_46P8_NS

0x0001F183 CDC_A_NCP_FBCTRL

Type: RW
Clock: PBUS_WRCLK
Reset State: 0x28
Reset Name: perph_rb

CDC_A_NCP_FBCTRL

Bits	Name	Description
6	FB_EN_SWCLK	0x0: CONTROLS_SWTICHING_CLK 0x1: NOT_CONTROL_SWITCHING_CLK
5	FB_CLK_INV	0x0: NON_INVERTED_CLK 0x1: INVERTED_CLK
4	SAMPLE_BYP	0x0: SAMPLE_WITH_CLK 0x1: WITHOUT_SAMPLER
3	SAMPLE_SWCLK_BYP	0x0: CLOCK_DIVIDER_OR_MCLK 0x1: SWITCHING_CLOCK
2	SAMPLE_MCLK_BYP	0x0: CLOCK_DIVIDER 0x1: MCLK

CDC_A_NCP_FBCTRL (cont.)

Bits	Name	Description
1:0	SAMPLE_FREQ_DIV	0x0: DIV_FREQ_0P5 0x1: DIV_FREQ_2 0x2: DIV_FREQ_4 0x3: DIV_FREQ_8

0x0001F184 CDC_A_NCP_BIAS

Type: RW
Clock: PBUS_WRCLK
Reset State: 0x29
Reset Name: perph_rb

CDC_A_NCP_BIAS

Bits	Name	Description
7:5	IB_LDO_1UA	0x0: I_0P5_UA 0x1: I_1_UA 0x2: I_1P5_UA 0x3: I_2_UA 0x4: I_2P5_UA 0x5: I_3_UA 0x6: I_3P5_UA 0x7: I_4_UA
4:3	IB_DG_CTRL2	0x0: I_5_UA 0x1: I_10_UA 0x2: I_15_UA 0x3: I_20_UA
2:0	IB_COMP1_5UA	0x0: I_2P5_UA 0x1: I_5_UA 0x2: I_7P5_UA 0x3: I_10_UA 0x4: I_12P5_UA 0x5: I_15_UA 0x6: I_17P5_UA 0x7: I_20_UA

0x0001F185 CDC_A_NCP_VCTRL

Type: RW
Clock: PBUS_WRCLK
Reset State: 0x24
Reset Name: perph_rb

CDC_A_NCP_VCTRL

Bits	Name	Description
5:3	LDO_VCTRLB	0x0: VDR_2P2V 0x1: VDR_2P4V 0x2: VDR_2P6V 0x3: VDR_2P8V 0x4: VDR_3V 0x5: VDR_3P2V 0x6: VDR_3P4V 0x7: VDR_3P6V
2:0	VNEG_OUT	0x0: VNEG_1P1V 0x1: VNEG_1P2V 0x2: VNEG_1P3V 0x3: VNEG_1P4V 0x4: VNEG_1P5V 0x5: VNEG_1P6V 0x6: VNEG_1P7V 0x7: VNEG_1P8V

0x0001F186 CDC_A_NCP_TEST

Type: RW
Clock: PBUS_WRCLK
Reset State: 0x00
Reset Name: perph_rb

CDC_A_NCP_TEST

Bits	Name	Description
7:4	NCP_ATEST	0x0: NO_CONN 0x1: LDO_VOUT 0x2: IREF_VNEG 0x4: IREF_LDO
3:0	NCP_DTEST	0x0: NO_CONN 0x5: SW_CLK_TEST_EN 0xA: FB_TEST_EN 0xF: CLIM_TEST_EN

0x0001F187 CDC_A_NCP_CLIM

Type: RW
Clock: PBUS_WRCLK
Reset State: 0xD5
Reset Name: perph_rb

CDC_A_NCP_CLIM

Bits	Name	Description
7:5	IN_SW_2_DELAY	0x0: SW_2_DELAY_CLK_DIV_2 0x1: SW_2_DELAY_CLK_DIV_4 0x2: SW_2_DELAY_CLK_DIV_8 0x3: SW_2_DELAY_CLK_DIV_16 0x4: SW_2_DELAY_CLK_DIV_32 0x5: SW_2_DELAY_CLK_DIV_64 0x6: SW_2_DELAY_CLK_DIV_128 0x7: SW_2_DELAY_CLK_DIV_256
4:3	IN_SW_1_DELAY	0x0: SW_1_DELAY_CLK_DIV_32 0x1: SW_1_DELAY_CLK_DIV_64 0x2: SW_1_DELAY_CLK_DIV_128 0x3: SW_1_DELAY_CLK_DIV_256
2:0	IN_SW_0_DELAY	0x0: SW_0_DELAY_CLK_DIV_2 0x1: SW_0_DELAY_CLK_DIV_4 0x2: SW_0_DELAY_CLK_DIV_8 0x3: SW_0_DELAY_CLK_DIV_16 0x4: SW_0_DELAY_CLK_DIV_32 0x5: SW_0_DELAY_CLK_DIV_64 0x6: SW_0_DELAY_CLK_DIV_128 0x7: SW_0_DELAY_CLK_DIV_256

0x0001F190 CDC_A_RX_CLOCK_DIVIDER

Type: RW
Clock: PBUS_WRCLK
Reset State: 0xE8
Reset Name: perph_rb

CDC_A_RX_CLOCK_DIVIDER

Bits	Name	Description
7:1	RX_CLK_DIVIDER	0x0: DIV_4 0x32: DIV_72 0x74: DIV_96 0x7F: DIV_512
0	DTEST_EN	0x0: DISABLE 0x1: ENABLE

0x0001F191 CDC_A_RX_COM_OCP_CTL

Type: RW
Clock: PBUS_WRCLK
Reset State: 0xCF
Reset Name: perph_rb

CDC_A_RX_COM_OCP_CTL

Bits	Name	Description
7:5	OCP_CURR_LIMIT	0x0: I_280MA 0x2: I_370MA 0x3: I_440MA 0x4: I_140MA 0x6: I_185MA 0x7: I_220MA
4	OCP_FSM_EN	0x0: DISABLE 0x1: ENABLE
3:0	N_CONN_ATTEMPTS	0x0: N_0 0x1: N_1 0xF: N_15

0x0001F192 CDC_A_RX_COM_OCP_COUNT

Type: RW
Clock: PBUS_WRCLK
Reset State: 0x6E
Reset Name: perph_rb

CDC_A_RX_COM_OCP_COUNT

Bits	Name	Description
7:5	RUN_N_CYCLES	0x0: N_511 0x3: N_2047 0x7: N_4095
4:2	WAIT_N_CYCLES	0x0: N_511 0x3: N_2047 0x7: N_4095
1	FSM_LOCK_EN	0x0: DISABLE 0x1: ENABLE

0x0001F193 CDC_A_RX_COM_BIAS_DAC

Type: RW
Clock: PBUS_WRCLK
Reset State: 0x10
Reset Name: perph_rb

CDC_A_RX_COM_BIAS_DAC

Bits	Name	Description
7	RX_BIAS_EN	0x0: DISABLE 0x1: ENABLE
6:5	TEST_BIAS_CURR	0x0: I_0UA 0x1: I_1UA 0x2: I_2UA 0x3: I_3UA
4	DAC_CLK_SEL	0x0: ANALOG 0x1: DIGITAL
3:2	DAC_GAIN	0x0: G_0DB 0x1: G_0P27DB 0x2: G_0P54DB
0	DAC_REF_EN	0x0: DISABLE 0x1: ENABLE

0x0001F194 CDC_A_RX_HPH_BIAS_PA

Type: RW
Clock: PBUS_WRCLK
Reset State: 0x5A
Reset Name: perph_rb

CDC_A_RX_HPH_BIAS_PA

Bits	Name	Description
7:4	DAC_BIAS_CURR	0x0: I_0P0UA 0x1: I_0P5UA 0x5: I_2P5UA 0xA: I_5P0UA 0xF: I_7P5UA
3:0	PA_BIAS_CURR	0x0: I_0P0UA 0x1: I_0P5UA 0x5: I_2P5UA 0xA: I_5P0UA 0xF: I_7P5UA

0x0001F195 CDC_A_RX_HPH_BIAS_LDO_OCP

Type: RW
Clock: PBUS_WRCLK
Reset State: 0x69
Reset Name: perph_rb

CDC_A_RX_HPH_BIAS_LDO_OCP

Bits	Name	Description
7:6	LDO_OTA_BIAS_CURR	0x0: I_1P5UA 0x1: I_2P0UA 0x2: I_2P5UA 0x3: I_3P0UA
5:4	LDO_OUT_BIAS_CURR	0x0: I_3P0UA 0x1: I_3P5UA 0x2: I_4P0UA 0x3: I_4P5UA
3:2	OCP_REF_CURR	0x0: I_4P0UA 0x1: I_4P5UA 0x2: I_5P0UA 0x3: I_5P5UA
1:0	SPK_DAC_BIAS_CURR	0x0: I_2P0UA 0x1: I_2P5UA 0x2: I_3P0UA 0x3: I_3P5UA

0x0001F196 CDC_A_RX_HPH_BIAS_CNP

Type: RW
Clock: PBUS_WRCLK
Reset State: 0x29
Reset Name: perph_rb

CDC_A_RX_HPH_BIAS_CNP

Bits	Name	Description
7:4	WG_CURR	0x0: I_0P0UA 0x1: I_0P5UA 0x5: I_2P5UA 0xA: I_5P0UA 0xF: I_7P5UA
3:2	OTA_BIAS_CURR	0x0: I_3P0UA 0x1: I_3P5UA 0x2: I_4P0UA 0x3: I_4P5UA

CDC_A_RX_HPH_BIAS_CNP (cont.)

Bits	Name	Description
1:0	VBAT_LDO_CURR	0x0: I_0P5UA 0x1: I_1P0UA 0x2: I_1P5UA 0x3: I_2P0UA

0x0001F197 CDC_A_RX_HPH_CNP_EN

Type: RW
Clock: PBUS_WRCLK
Reset State: 0x80
Reset Name: perph_rb

CDC_A_RX_HPH_CNP_EN

Bits	Name	Description
7	FSM_CLK_EN	0x0: DISABLE 0x1: ENABLE
6	FSM_RESET	0x0: NORMAL_OP 0x1: RESET
5:4	HPH_PA_EN	0x0: NONE 0x1: HPHR 0x2: HPHL 0x3: HPHR_HPHL
3	FSM_OVERRIDE_EN	0x0: DISABLE 0x1: ENABLE
2:0	RESERVED	Reserved

0x0001F198 CDC_A_RX_HPH_CNP_WG_CTL

Type: RW
Clock: PBUS_WRCLK
Reset State: 0xDA
Reset Name: perph_rb

CDC_A_RX_HPH_CNP_WG_CTL

Bits	Name	Description
7	GM3_BOOST_EN	0x0: DISABLE 0x1: ENABLE
6	PWR_DN_SEQ_EN	0x0: DISABLE 0x1: ENABLE

CDC_A_RX_HPH_CNP_WG_CTL (cont.)

Bits	Name	Description
5:3	VREF_TIMER	0x0: T_0US 0x1: T_1X0P72US 0x3: T_3X0P72US 0x7: T_7X0P72US
2:0	CURR_LDIV_CTL	0x0: DIV_250 0x1: DIV_333 0x2: DIV_500 0x3: DIV_1000 0x7: DIV_2000

0x0001F199 CDC_A_RX_HPH_CNP_WG_TIME

Type: RW
Clock: PBUS_WRCLK
Reset State: 0x16
Reset Name: perph_rb

CDC_A_RX_HPH_CNP_WG_TIME

Bits	Name	Description
7:2	WG_FINE_TIMER	0x0: T_0MS 0x1: T_1MS 0x5: T_5MS 0x3F: T_60MS
1:0	VBAT_LDO_OUT	0x0: V_2P6V 0x1: V_2P8V 0x2: V_3P0V 0x3: VCM_3P2V

0x0001F19A CDC_A_RX_HPH_L_TEST

Type: RW
Clock: PBUS_WRCLK
Reset State: 0x00
Reset Name: perph_rb

CDC_A_RX_HPH_L_TEST

Bits	Name	Description
7	PA_BIAS_EN	0x0: DISABLE 0x1: ENABLE
6	PA_OUT2_EN	0x0: DISABLE 0x1: ENABLE

CDC_A_RX_HPH_L_TEST (cont.)

Bits	Name	Description
5	PA_OUT_EN	0x0: DISABLE 0x1: ENABLE
4	PA_CNP_SW_CONN	0x0: STATIC 0x1: WAVEGEN
3	PA_CNP_SW_OVER-RIDE_EN	0x0: DISABLE 0x1: ENABLE
2	OCP_DET_EN	0x0: DISABLE 0x1: ENABLE
1	DIS_ZDET_VDSOP	0x0: DISABLE 0x1: ENABLE
0	DIS_ZDET_RFBOS	0x0: DISABLE 0x1: ENABLE

0x0001F19B CDC_A_RX_HPH_L_PA_DAC_CTL

Type: RW
Clock: PBUS_WRCLK
Reset State: 0x20
Reset Name: perph_rb

CDC_A_RX_HPH_L_PA_DAC_CTL

Bits	Name	Description
7:4	GM3_IBIAS_CTL	0x1: GM_400_PCT 0x2: GM_200_PCT 0x4: GM_100_PCT 0x8: GM_50_PCT 0xC: GM_33_PCT
3	DAC_DATA_EN	0x0: DISABLE 0x1: ENABLE
2	DAC_SAMPLE_EDGE_SEL	0x0: FALLING 0x1: RISING
1	DATA_RESET	0x0: NORMAL_OP 0x1: RESET
0	INV_DATA	0x0: DISABLE 0x1: ENABLE

0x0001F19C CDC_A_RX_HPH_R_TEST

Type: RW
Clock: PBUS_WRCLK
Reset State: 0x00
Reset Name: perph_rb

CDC_A_RX_HPH_R_TEST

Bits	Name	Description
7	PA_BIAS_EN	0x0: DISABLE 0x1: ENABLE
6	PA_OUT2_EN	0x0: DISABLE 0x1: ENABLE
5	PA_OUT_EN	0x0: DISABLE 0x1: ENABLE
4	PA_CNP_SW_CONN	0x0: STATIC 0x1: WAVEGEN
3	PA_CNP_SW_OVER-RIDE_EN	0x0: DISABLE 0x1: ENABLE
2	OCP_DET_EN	0x0: DISABLE 0x1: ENABLE
1	DIS_ZDET_VDSOP	0x0: DISABLE 0x1: ENABLE
0	DIS_ZDET_RFBOS	0x0: DISABLE 0x1: ENABLE

0x0001F19D CDC_A_RX_HPH_R_PA_DAC_CTL

Type: RW
Clock: PBUS_WRCLK
Reset State: 0x20
Reset Name: perph_rb

CDC_A_RX_HPH_R_PA_DAC_CTL

Bits	Name	Description
7:4	GM3_IBIAS_CTL	0x1: GM_400_PCT 0x2: GM_200_PCT 0x4: GM_100_PCT 0x8: GM_50_PCT 0xC: GM_33_PCT
3	DAC_DATA_EN	0x0: DISABLE 0x1: ENABLE

CDC_A_RX_HPH_R_PA_DAC_CTL (cont.)

Bits	Name	Description
2	DAC_SAMPLE_EDGE_SEL	0x0: FALLING 0x1: RISING
1	DATA_RESET	0x0: NORMAL_OP 0x1: RESET
0	INV_DATA	0x0: DISABLE 0x1: ENABLE

0x0001F19E CDC_A_RX_EAR_EN

Type: RW
Clock: PBUS_WRCLK
Reset State: 0x12
Reset Name: perph_rb

CDC_A_RX_EAR_EN

Bits	Name	Description
7	PA_SEL	0x0: HPH 0x1: EAR
6	EAR_PA_EN	0x0: DISABLE 0x1: ENABLE
5	GAIN	For EAR: 0x0: POS_1P5_DB 0x1: POS_6_DB For HPH: 0x0: POS_M4P5_DB 0x1: POS_0_DB NOTE: The 0dB gain mode for HPH is supported only when 2.2uF cap is used for CP_C1_N/P flying cap and CP_VNEG bypass cap.
4:3	EAR_CM_SEL	0x0: VCM_1P5V 0x1: VCM_1P56V 0x2: VCM_1P6V 0x3: VCM_1P65V
2:1	EAR_CMBUF_BIAS_CURR	0x0: I_1P5UA 0x1: I_2P0UA 0x2: I_2P5UA 0x3: I_3P0UA
0	SPK_VBAT_LDO_EN	0x0: DISABLE 0x1: ENABLE

0x0001F19F CDC_A_RX_ATEST

Type: RW
Clock: PBUS_WRCLK
Reset State: 0x00
Reset Name: perph_rb

CDC_A_RX_ATEST

Bits	Name	Description
7	PA_L_ATEST_EN	
6	LDOL_ATEST2_CAL	
5	PA_R_ATEST_EN	
4	LDOR_ATEST2_CAL	
3	DAC_ATEST_EN	

0x0001F1A0 CDC_A_RX_HPH_STATUS

Type: R
Clock: PBUS_WRCLK
Reset State: 0x0C
Reset Name: perph_rb

CDC_A_RX_HPH_STATUS

Bits	Name	Description
7	HPHL_SCHMITT_TRIGGER_OUT	0: NO_HPH 1: HPH_INSERTED
6	HPHR_SCHMITT_TRIGGER_OUT	0: NO_HPH 1: HPH_INSERTED
5	HPHL_READY	0: DISABLED 1: READY
4	HPHR_READY	0: DISABLED 1: READY
3	HPHL_OCP_COMP_DET	0: NO_OCP 1: OCP
2	HPHR_OCP_COMP_DET	0: NO_OCP 1: OCP
1	HPHL_OCP_LIMIT	0: NO_OCP 1: OCP
0	HPHR_OCP_LIMIT	0: NO_OCP 1: OCP

0x0001F1A1 CDC_A_RX_EAR_STATUS

Type: R
Clock: PBUS_WRCLK
Reset State: 0x00
Reset Name: perph_rb

CDC_A_RX_EAR_STATUS

Bits	Name	Description
7:0	STATUS	

0x0001F1B0 CDC_A_SPKR_DAC_CTL

Type: RW
Clock: PBUS_WRCLK
Reset State: 0x83
Reset Name: perph_rb

CDC_A_SPKR_DAC_CTL

Bits	Name	Description
7	REF_EN	0x0: DISABLE 0x1: ENABLE
6:5	DAC_GAIN	0x0: POS_0P00_DB 0x1: POS_0P27_DB 0x2: POS_0P54_DB
4	DAC_RESET	0x0: NORMAL 0x1: RESET
3	CLK_POLARITY	0x0: FALLING 0x1: RISING
2	MCLK_SEL	0x0: MCLK 0x1: NCPCLK
1	CAL_BYPASS	0x1: NORMAL 0x0: BYPASS
0	CLK_4X_B	0x0: NORMAL_4XCLK 0x1: NORMAL_CLK

0x0001F1B1 CDC_A_SPKR_DRV_CLIP_DET

Type: RW
Clock: PBUS_WRCLK
Reset State: 0x91
Reset Name: perph_rb

CDC_A_SPKR_DRV_CLIP_DET

Bits	Name	Description
7:5	CLIP_LIMIT	0x0: N_0 0x1: N_1 0x2: N_2 0x3: N_3 0x4: N_4 0x5: N_5 0x6: N_6 0x7: N_7
4:2	FIFO_LEN	0x0: N_1 0x1: N_2 0x2: N_3 0x3: N_4 0x4: N_5 0x5: N_6 0x6: N_7 0x7: N_8
1:0	CLIP_MODE	0x0: DISABLE 0x1: ENABLE_CLIP_DET 0x2: CNP_TEST_START_UP 0x3: CNP_TEST_SHUT_DOWN

0x0001F1B2 CDC_A_SPKR_DRV_CTL

Type: RW
Clock: PBUS_WRCLK
Reset State: 0x69
Reset Name: perph_rb

CDC_A_SPKR_DRV_CTL

Bits	Name	Description
7	CLASSD_PA_EN	0x0: DISABLE 0x1: ENABLE
6	CAL_EN	0x0: DISABLE 0x1: ENABLE
5	SETTLE_EN	0x0: DISABLE 0x1: ENABLE
4	PWM_STATES	0x1: PWM_2STATE 0x0: PWM_3STATE
3	FW_EN	0x0: DISABLE 0x1: ENABLE

CDC_A_SPKR_DRV_CTL (cont.)

Bits	Name	Description
2	BOOST_SET	0x0: DISABLE 0x1: ENABLE
1	CMFB_SET	0x0: I_200UA 0x1: I_300UA
0	GAIN_SET	0x1: G12DB 0x0: RESERVED

0x0001F1B3 CDC_A_SPKR_ANA_BIAS_SET

Type: RW
Clock: PBUS_WRCLK
Reset State: 0x4D
Reset Name: perph_rb

CDC_A_SPKR_ANA_BIAS_SET

Bits	Name	Description
7:5	INT1_CMFB_CURR	0x0: I_9P00UA 0x1: I_9P50UA 0x2: I_10P00UA 0x3: I_10P50UA 0x4: I_11P00UA 0x5: I_11P50UA 0x6: I_12P00UA 0x7: I_12UA50
4:2	SAR_DAC_CURR	0x0: I_1P25UA 0x1: I_1P50UA 0x2: I_1P75UA 0x3: I_2P00UA 0x4: I_2P25UA 0x5: I_2P50UA 0x6: I_2P75UA 0x7: I_30UA
1:0	INT2_OPAMP_CURR	0x0: I_7P00UA 0x2: I_8P00UA 0x3: I_8P50UA

0x0001F1B4 CDC_A_SPKR_OCP_CTL

Type: RW
Clock: PBUS_WRCLK
Reset State: 0xA1
Reset Name: perph_rb

CDC_A_SPKR_OCP_CTL

Bits	Name	Description
7	OCP_EN	0x0: DIABLE 0x1: ENABLE
6	OCP_HOLD	0x0: DIABLE 0x1: ENABLE
5:4	OCP_CURR_LIMIT	0x0: ZEROP5A 0x1: TWOP5A 0x2: THREEP0A 0x3: FOURP0A
3:2	GLITCH_FILTER	0x0: T160NS 0x1: T120NS 0x2: T80NS 0x3: T40NS
1:0	INT2_SF_CURR	0x0: I_10P00UA 0x1: I_15P00UA 0x2: I_20P00UA 0x3: I_25P00UA

0x0001F1B5 CDC_A_SPKR_PWRSTG_CTL

Type: RW
Clock: PBUS_WRCLK
Reset State: 0x1E
Reset Name: perph_rb

CDC_A_SPKR_PWRSTG_CTL

Bits	Name	Description
7	BBM_EN	0x0: DIABLE 0x1: ENABLE
6	HBRDGE_EN	0x0: DIABLE 0x1: ENABLE
5	CLAMP_EN	0x0: DIABLE 0x1: ENABLE
4:3	DEADTIME	0x0: T20NS 0x1: T15NS 0x2: T10NS 0x3: T05NS
2:1	SLEW	0x0: T20NS 0x1: T15NS 0x2: T10NS 0x3: T05NS

CDC_A_SPKR_PWRSTG_CTL (cont.)

Bits	Name	Description
0	DAC_EN	0x0: DIABLE 0x1: ENABLE

0x0001F1B6 CDC_A_SPKR_DRV_MISC

Type: RW
Clock: PBUS_WRCLK
Reset State: 0xCB
Reset Name: perph_rb

CDC_A_SPKR_DRV_MISC

Bits	Name	Description
7:5	CMP_CURR	0x0: I_2P25UA 0x1: I_3P00UA 0x2: I_3P50UA 0x3: I_4P00UA 0x4: I_4P50UA 0x5: I_5P00UA 0x6: I_5P50UA 0x7: I_6P00UA
4:3	INT1_OTA1_CURR	0x0: I_14UA 0x1: I_15UA 0x2: I_16UA 0x3: I_17UA
2:1	INT2_OTA2_CURR	0x0: I_14UA 0x1: I_15UA 0x2: I_16UA 0x3: I_17UA
0	PWM_CLK_SEL	0x0: CLK_600KHZ 0x1: CLK_300KHZ

0x0001F1B7 RESERVED

0x0001F1C0 CDC_A_BOOST_CURRENT_LIMIT

Type: RW
Clock: PBUS_WRCLK
Reset State: 0x02
Reset Name: perph_rb

CDC_A_BOOST_CURRENT_LIMIT

Bits	Name	Description
7	MAX_CURR_LIM_ENABLE	0x1: ENABLE 0x0: DISABLE
2:0	SET_CURRENT_MAX	0x0: I_0P5A 0x1: I_1P0A 0x2: I_1P5A 0x3: I_2P0A 0x4: I_2P5A 0x5: I_3P0A 0x6: I_3P5A 0x7: I_4P0A

0x0001F1C1 CDC_A_BOOST_OUTPUT_VOLTAGE

Type: RW
Clock: PBUS_WRCLK
Reset State: 0x14
Reset Name: perph_rb

CDC_A_BOOST_OUTPUT_VOLTAGE

Bits	Name	Description
4:0	SET_OUTPUT_VOLTAGE	0x0: VOUT_4P000V 0x1: VOUT_4P050V 0x2: VOUT_4P100V 0x3: VOUT_4P150V 0x4: VOUT_4P200V 0x5: VOUT_4P250V 0x6: VOUT_4P300V 0x7: VOUT_4P350V 0x8: VOUT_4P400V 0x9: VOUT_4P450V 0xA: VOUT_4P500V 0xB: VOUT_4P550V 0xC: VOUT_4P600V 0xD: VOUT_4P650V 0xE: VOUT_4P700V 0xF: VOUT_4P750V 0x10: VOUT_4P800V 0x11: VOUT_4P850V 0x12: VOUT_4P900V 0x13: VOUT_4P950V 0x14: VOUT_5P000V 0x15: VOUT_5P050V 0x16: VOUT_5P100V 0x17: VOUT_5P150V
		0x17: VOUT_5P150V 0x18: VOUT_5P200V 0x19: VOUT_5P250V 0x1A: VOUT_5P300V 0x1B: VOUT_5P350V 0x1C: VOUT_5P400V 0x1D: VOUT_5P450V 0x1E: VOUT_5P500V 0x1F: VOUT_5P550V

0x0001F1C2 CDC_A_BOOST_BYPASS_MODE

Type: RW
Clock: PBUS_WRCLK
Reset State: 0x00
Reset Name: perph_rb

CDC_A_BOOST_BYPASS_MODE

Bits	Name	Description
7	EN_PFET_BYPASS	0x0: DISABLE_BYPASS 0x1: BYPASS_PFET
6	PFET_FORCE	0x0: FORCE_PFET_OFF 0x1: FORCE_PFET_ON
1	EN_NFET_BYPASS	0x0: PWM_CTL_NFET 0x1: EXTERNAL_CTL_NFET
0	NFET_FORCE	0x0: FORCE_NFET_OFF 0x1: FORCE_NFET_ON

0x0001F1C3 CDC_A_BOOST_EN_CTL

Type: RW
Clock: PBUS_WRCLK
Reset State: 0x5F
Reset Name: perph_rb

CDC_A_BOOST_EN_CTL

Bits	Name	Description
7	BOOST_ENABLE	0x0: MODULE_DISABLE 0x1: MODULE_ENABLE
6	PULSE_SKIP_MODE	0x0: DISABLE 0x1: ENABLE
5:4	PULSE_SKIP_THRES	0x0: PULSESKIP_THRES_50MA 0x1: PULSESKIP_THRES_100MA 0x2: PULSESKIP_THRES_150MA 0x3: PULSESKIP_THRES_200MA
3:2	LOOP_COMP_CAP	0x0: C_40PF 0x1: C_60PF 0x2: C_80PF 0x3: C_100PF
1:0	LOOP_COMP_RES	0x0: R_100K 0x1: R_200K 0x2: R_500K 0x3: R_600K

0x0001F1C4 CDC_A_SLOPE_COMP_IP_ZERO

Type: RW
Clock: PBUS_WRCLK
Reset State: 0x88
Reset Name: perph_rb

CDC_A_SLOPE_COMP_IP_ZERO

Bits	Name	Description
7:5	SLOPE_COMP_CURRNET	0x0: I_4P5UA 0x1: I_4P0UA 0x2: I_3P5UA 0x3: I_3P0UA 0x4: I_2P5UA 0x5: I_2P0UA 0x6: I_1P5UA 0x7: I_1P0UA
4	SLOPE_COMP_DOUBLER	0x0: DOUBLE 0x1: NO_DOUBLE
3	ZX_DETECT_ON	0x0: FORCE_IP_ZERO_DETETOR_OUPUT_ZERO 0x1: ENABLE_IP_ZERO_DETECTION
2	AUTOZERO_ON	0x0: AUTO_ZERO_WHEN_PFET_OFF 0x1: NO_AUTO_ZERO

0x0001F1C5 CDC_A_RDSON_MAX_DUTY_CYCLE

Type: RW
Clock: PBUS_WRCLK
Reset State: 0xC0
Reset Name: perph_rb

CDC_A_RDSON_MAX_DUTY_CYCLE

Bits	Name	Description
7	NFET_SW_SIZE	0x0: TWOBY3_FULL_SIZE 0x1: FULL_SIZE
6	EN_MAX_DUTY_CYCLE	0x0: DISABLE 0x1: ENABLE

0x0001F1C6 RESERVED

0x0001F1C7 RESERVED

0x0001F1C8 CDC_A_SPKR_SAR_STATUS

Type: R
Clock: PBUS_WRCLK
Reset State: 0x00
Reset Name: perph_rb

CDC_A_SPKR_SAR_STATUS

Bits	Name	Description
6:0	SAR_ADC	Default is x00 only if SPKR PA is enabled (xB2 bit 7 is 1). Default is unknown if SPKR PA is disabled.

0x0001F1C9 CDC_A_SPKR_DRV_STATUS

Type: R
Clock: PBUS_WRCLK
Reset State: 0x00
Reset Name: perph_rb

CDC_A_SPKR_DRV_STATUS

Bits	Name	Description
7	CAL_STOP	
6	POS_PMOS_OCP_1	
5	POS_NMOS_OCP_2	
4	NEG_PMOS_OCP_1	
3	NEG_NMOS_OCP_2	
1	CLIP_DET_P	
0	CLIP_DET_N	

0x0001F1CE CDC_A_PBUS_ADD_CSR

Type: RW
Clock: PBUS_WRCLK
Reset State: 0x00
Reset Name: perph_rb

SW write to this pointer register before read from analog register to avoid read back timing

CDC_A_PBUS_ADD_CSR

Bits	Name	Description
7:0	REG	

0x0001F1CF CDC_A_PBUS_ADD_SEL

Type: RW
Clock: PBUS_WRCLK
Reset State: 0x00
Reset Name: perph_rb

This register is used to select PBUS address or PBUS_ADD_CSR

CDC_A_PBUS_ADD_SEL

Bits	Name	Description
0	REG	

75 CDC_BOOST_FREQ_BCLK_GEN_CLK

0x0001F200 - RESERVED
0x0001F201

0x0001F204 CDC_BOOST_FREQ_PERPH_TYPE

Type: R
Clock: PBUS_WRCLK
Reset State: 0x1D
Reset Name: N/A

Peripheral Type

CDC_BOOST_FREQ_PERPH_TYPE

Bits	Name	Description
7:0	TYPE	BCLK GEN

0x0001F205 CDC_BOOST_FREQ_PERPH_SUBTYPE

Type: R
Clock: PBUS_WRCLK
Reset State: 0x19
Reset Name: N/A

Peripheral SubType

CDC_BOOST_FREQ_PERPH_SUBTYPE

Bits	Name	Description
7:0	SUBTYPE	BCLK GEN CLK

0x0001F246 CDC_BOOST_FREQ_CLK_ENABLE

Type: RW
Clock: PBUS_WRCLK
Reset State: 0x01
Reset Name: PERPH_RB

PMIC_LOCKED=SEC_ACCESS

CDC_BOOST_FREQ_CLK_ENABLE

Bits	Name	Description
7	EN_CLK_INT	0 = do not force the clock on 1 = enable the clock 0x0: FORCE_EN_DISABLED 0x1: FORCE_EN_ENABLED
0	FOLLOW_CLK_SX_REQ	0 = ignore smps_clk_req<X> 1 = clock is enabled when the clocks request is high smps_clk_req<X>='1' 0x0: FALLOW_CLK_REQ_DISABLED 0x1: FALLOW_CLK_REQ_ENABLED

0x0001F250 CDC_BOOST_FREQ_CLK_DIV

Type: RW
Clock: PBUS_WRCLK
Reset State: 0x05
Reset Name: PERPH_RB

PMIC_LOCKED=SEC_ACCESS, PMIC_GANGED

CDC_BOOST_FREQ_CLK_DIV

Bits	Name	Description
3:0	CLK_DIV	clock_ frequency = 19.2MHz / (CLK_DIV + 1) FTS2 Buck supports 3.2, 4.8, 6.4 and 9.6 MHz HF2 Buck supports 1.6, 2.4, 2.74, 3.2, 3.8, 4.8, and 6.4 MHz CLK_DIV = 0 is not supported, it will generate 9.6 MHz 0x0: FREQ_9M6HZ_0 0x1: FREQ_9M6HZ 0x2: FREQ_6M4HZ 0x3: FREQ_4M8HZ 0x4: FREQ_3M8HZ 0x5: FREQ_3M2HZ 0x6: FREQ_2M7HZ 0x7: FREQ_2M4HZ 0x8: FREQ_2M1HZ 0x9: FREQ_1M9HZ 0xA: FREQ_1M7HZ 0xB: FREQ_1M6HZ 0xC: FREQ_1M5HZ 0xD: FREQ_1M4HZ 0xE: FREQ_1M3HZ 0xF: FREQ_1M2HZ

0x0001F251 CDC_BOOST_FREQ_CLK_PHASE

Type: RW
Clock: PBUS_WRCLK
Reset State: 0x0C
Reset Name: PERPH_RB

PMIC_LOCKED=SEC_ACCESS

CDC_BOOST_FREQ_CLK_PHASE

Bits	Name	Description
3:0	CLK_PHASE	Distributed clock phase select: clock phase delay = clock period * (CLK_PHASE / 16)

0x0001F2C0 CDC_BOOST_FREQ_GANG_CTL1

Type: RW
Clock: PBUS_WRCLK
Reset State: 0x00
Reset Name: PERPH_RB

PMIC_LOCKED=SEC_ACCESS

CDC_BOOST_FREQ_GANG_CTL1

Bits	Name	Description
7:0	GANG_LEADER_PID	When GANG_EN (GANG_CTL2[7]) is set, this peripheral will write the same data that is written to the gang leader Peripheral ID. Reads to the gang leader Peripheral ID are ignored by this peripheral. Ganged peripherals must reside within the same Slave ID

0x0001F2C1 CDC_BOOST_FREQ_GANG_CTL2

Type: RW
Clock: PBUS_WRCLK
Reset State: 0x00
Reset Name: PERPH_RB

PMIC_LOCKED=SEC_ACCESS

CDC_BOOST_FREQ_GANG_CTL2

Bits	Name	Description
7	GANG_EN	0 = disable 1 = enable When enabled, this peripheral will write the same data that is written to the gang leader PID. Reads to the gang leader PID are ignored by this peripheral 0x0: GANGING_DISABLED 0x1: GANGING_ENABLED

76 CDC_NCP_FREQ_BCLK_GEN_CLK

0x0001F300 - RESERVED
0x0001F301

0x0001F304 CDC_NCP_FREQ_PERPH_TYPE

Type: R
Clock: PBUS_WRCLK
Reset State: 0x1D
Reset Name: N/A

Peripheral Type

CDC_NCP_FREQ_PERPH_TYPE

Bits	Name	Description
7:0	TYPE	BCLK GEN

0x0001F305 CDC_NCP_FREQ_PERPH_SUBTYPE

Type: R
Clock: PBUS_WRCLK
Reset State: 0x19
Reset Name: N/A

Peripheral SubType

CDC_NCP_FREQ_PERPH_SUBTYPE

Bits	Name	Description
7:0	SUBTYPE	BCLK GEN CLK

0x0001F346 CDC_NCP_FREQ_CLK_ENABLE

Type: RW
Clock: PBUS_WRCLK
Reset State: 0x01
Reset Name: PERPH_RB

PMIC_LOCKED=SEC_ACCESS

CDC_NCP_FREQ_CLK_ENABLE

Bits	Name	Description
7	EN_CLK_INT	0 = do not force the clock on 1 = enable the clock 0x0: FORCE_EN_DISABLED 0x1: FORCE_EN_ENABLED
0	FOLLOW_CLK_SX_REQ	0 = ignore smps_clk_req<X> 1 = clock is enabled when the clocks request is high smps_clk_req<X>='1' 0x0: FALLOW_CLK_REQ_DISABLED 0x1: FALLOW_CLK_REQ_ENABLED

0x0001F350 CDC_NCP_FREQ_CLK_DIV

Type: RW
Clock: PBUS_WRCLK
Reset State: 0x01
Reset Name: PERPH_RB

PMIC_LOCKED=SEC_ACCESS, PMIC_GANGED

CDC_NCP_FREQ_CLK_DIV

Bits	Name	Description
3:0	CLK_DIV	clock_ frequency = 19.2MHz / (CLK_DIV + 1) FTS2 Buck supports 3.2, 4.8, 6.4 and 9.6 MHz HF2 Buck supports 1.6, 2.4, 2.74, 3.2, 3.8, 4.8, and 6.4 MHz CLK_DIV = 0 is not supported, it will generate 9.6 MHz 0x0: FREQ_9M6HZ_0 0x1: FREQ_9M6HZ 0x2: FREQ_6M4HZ 0x3: FREQ_4M8HZ 0x4: FREQ_3M8HZ 0x5: FREQ_3M2HZ 0x6: FREQ_2M7HZ 0x7: FREQ_2M4HZ 0x8: FREQ_2M1HZ 0x9: FREQ_1M9HZ 0xA: FREQ_1M7HZ 0xB: FREQ_1M6HZ 0xC: FREQ_1M5HZ 0xD: FREQ_1M4HZ 0xE: FREQ_1M3HZ 0xF: FREQ_1M2HZ

0x0001F351 CDC_NCP_FREQ_CLK_PHASE

Type: RW
Clock: PBUS_WRCLK
Reset State: 0x06
Reset Name: PERPH_RB

PMIC_LOCKED=SEC_ACCESS

CDC_NCP_FREQ_CLK_PHASE

Bits	Name	Description
3:0	CLK_PHASE	Distributed clock phase select: clock phase delay = clock period * (CLK_PHASE / 16)

0x0001F3C0 CDC_NCP_FREQ_GANG_CTL1

Type: RW
Clock: PBUS_WRCLK
Reset State: 0x00
Reset Name: PERPH_RB

PMIC_LOCKED=SEC_ACCESS

CDC_NCP_FREQ_GANG_CTL1

Bits	Name	Description
7:0	GANG_LEADER_PID	When GANG_EN (GANG_CTL2[7]) is set, this peripheral will write the same data that is written to the gang leader Peripheral ID. Reads to the gang leader Peripheral ID are ignored by this peripheral. Ganged peripherals must reside within the same Slave ID

0x0001F3C1 CDC_NCP_FREQ_GANG_CTL2

Type: RW
Clock: PBUS_WRCLK
Reset State: 0x00
Reset Name: PERPH_RB

PMIC_LOCKED=SEC_ACCESS

CDC_NCP_FREQ_GANG_CTL2

Bits	Name	Description
7	GANG_EN	0 = disable 1 = enable When enabled, this peripheral will write the same data that is written to the gang leader PID. Reads to the gang leader PID are ignored by this peripheral 0x0: GANGING_DISABLED 0x1: GANGING_ENABLED

Index of Registers

BB_CLK1_DRV_CTL1, 373
BB_CLK1_EDGE_CTL1, 373
BB_CLK1_EN_CTL, 374
BB_CLK1_PERPH_SUBTYPE, 372
BB_CLK1_PERPH_TYPE, 372
BB_CLK1_STATUS1, 373
BB_CLK2_DRV_CTL1, 376
BB_CLK2_EDGE_CTL1, 376
BB_CLK2_EN_CTL, 377
BB_CLK2_PERPH_SUBTYPE, 375
BB_CLK2_PERPH_TYPE, 375
BB_CLK2_STATUS1, 376
BCLK_GEN_MAIN_PERPH_SUBTYPE, 488
BCLK_GEN_MAIN_PERPH_TYPE, 488
BCLK_GEN_MAIN_QM_MODE, 489
BMS_VM_ACCUM_CNT_RT, 339
BMS_VM_ACCUM_CNT_SD, 339
BMS_VM_ACCUM_DATA0_RT, 337
BMS_VM_ACCUM_DATA0_SD, 338
BMS_VM_ACCUM_DATA1_RT, 337
BMS_VM_ACCUM_DATA1_SD, 338
BMS_VM_ACCUM_DATA2_RT, 338
BMS_VM_ACCUM_DATA2_SD, 339
BMS_VM_BMS_DATA_REG_0, 365
BMS_VM_BMS_DATA_REG_1, 365
BMS_VM_BMS_DATA_REG_2, 365
BMS_VM_BMS_DATA_REG_3, 366
BMS_VM_BMS_DATA_REG_4, 366
BMS_VM_BMS_DATA_REG_5, 366
BMS_VM_BMS_DATA_REG_6, 366
BMS_VM_BMS_DATA_REG_7, 367
BMS_VM_BMS_DATA_REG_8, 367
BMS_VM_BMS_DATA_REG_9, 367
BMS_VM_BMS_FIFO_REG_0_LSB, 367
BMS_VM_BMS_FIFO_REG_0_MSB, 368
BMS_VM_BMS_FIFO_REG_1_LSB, 368
BMS_VM_BMS_FIFO_REG_1_MSB, 368
BMS_VM_BMS_FIFO_REG_2_LSB, 368
BMS_VM_BMS_FIFO_REG_2_MSB, 369
BMS_VM_BMS_FIFO_REG_3_LSB, 369
BMS_VM_BMS_FIFO_REG_3_MSB, 369
BMS_VM_BMS_FIFO_REG_4_LSB, 370
BMS_VM_BMS_FIFO_REG_4_MSB, 370
BMS_VM_BMS_FIFO_REG_5_LSB, 370
BMS_VM_BMS_FIFO_REG_5_MSB, 370
BMS_VM_BMS_FIFO_REG_6_LSB, 371
BMS_VM_BMS_FIFO_REG_6_MSB, 371
BMS_VM_BMS_FIFO_REG_7_LSB, 371
BMS_VM_DATA_CTL1, 292
BMS_VM_DATA_CTL2, 292
BMS_VM_EN_CTL, 299
BMS_VM_FIFO_LENGTH_CTL, 300
BMS_VM_INT_EN_CLR, 288
BMS_VM_INT_EN_SET, 288
BMS_VM_INT_LATCHED_CLR, 287
BMS_VM_INT_LATCHED_STS, 289
BMS_VM_INT_MID_SEL, 290
BMS_VM_INT_PENDING_STS, 290
BMS_VM_INT_POLARITY_HIGH, 286
BMS_VM_INT_POLARITY_LOW, 286
BMS_VM_INT_PRIORITY, 291
BMS_VM_INT_RT_STS, 284
BMS_VM_INT_SET_TYPE, 285
BMS_VM_MODE_CTL, 291
BMS_VM_OCV_THR_CTL, 314
BMS_VM_OCV_THR0, 300
BMS_VM_OCV_THR1, 307
BMS_VM_PERPH_SUBTYPE, 282
BMS_VM_PERPH_TYPE, 282
BMS_VM_S1_ACCUM_CNT_CTL, 336
BMS_VM_S1_SAMP_AVG_CTL, 334
BMS_VM_S1_SAMPLE_INTERVAL_CTL, 315
BMS_VM_S2_ACCUM_CNT_CTL, 337
BMS_VM_S2_SAMP_AVG_CTL, 335
BMS_VM_S2_SAMPLE_INTERVAL_CTL, 321
BMS_VM_S3_LAST_OCV_DATA0, 352
BMS_VM_S3_LAST_OCV_DATA1, 359
BMS_VM_S3_OCV_TOL_CTL, 293
BMS_VM_S3_S7_OCV_DATA0, 339
BMS_VM_S3_S7_OCV_DATA1, 346
BMS_VM_S3_SAMP_AVG_CTL, 335
BMS_VM_S3_SAMPLE_INTERVAL_CTL, 327
BMS_VM_S7_DELAY_INTERVAL_CTL, 333
BMS_VM_S7_SAMP_AVG_CTL, 336
BMS_VM_STATUS1, 283
BMS_VM_STATUS2, 283
BUA_4UICC_BUA_CTL1, 136
BUA_4UICC_EN_CTL1, 137

BUA_4UICC_INT_EN_CLR, 134
BUA_4UICC_INT_EN_SET, 133
BUA_4UICC_INT_LATCHED_CLR, 133
BUA_4UICC_INT_LATCHED_STS, 134
BUA_4UICC_INT_MID_SEL, 135
BUA_4UICC_INT_PENDING_STS, 135
BUA_4UICC_INT_POLARITY_HIGH, 132
BUA_4UICC_INT_POLARITY_LOW, 132
BUA_4UICC_INT_PRIORITY, 136
BUA_4UICC_INT_RT_STS, 131
BUA_4UICC_INT_SET_TYPE, 132
BUA_4UICC_STATUS1, 130
BUA_4UICC_STATUS2, 130
BUS_PERPH_SUBTYPE, 16
BUS_PERPH_TYPE, 16
BUS_STATUS1, 17
BUS_TIMEOUT, 17
CDC_A_BOOST_BYPASS_MODE, 783
CDC_A_BOOST_CURRENT_LIMIT, 781
CDC_A_BOOST_EN_CTL, 784
CDC_A_BOOST_OUTPUT_VOLTAGE, 782
CDC_A_INT_EN_CLR, 745
CDC_A_INT_EN_SET, 745
CDC_A_INT_LATCHED_CLR, 744
CDC_A_INT_LATCHED_STS, 746
CDC_A_INT_MID_SEL, 747
CDC_A_INT_PENDING_STS, 746
CDC_A_INT_POLARITY_HIGH, 743
CDC_A_INT_POLARITY_LOW, 744
CDC_A_INT_PRIORITY, 747
CDC_A_INT_RT_STS, 742
CDC_A_INT_SET_TYPE, 743
CDC_A_MASTER_BIAS_CTL, 751
CDC_A_MBHC_BTN_ZDET_CTL_0, 754
CDC_A_MBHC_BTN_ZDET_CTL_1, 755
CDC_A_MBHC_BTN_ZDET_CTL_2, 755
CDC_A_MBHC_BTN3_CTL, 756
CDC_A_MBHC_BTN4_CTL, 757
CDC_A_MBHC_DBNC_TIMER, 753
CDC_A_MBHC_DET_CTL_1, 751
CDC_A_MBHC_DET_CTL_2, 752
CDC_A_MBHC_FSM_CTL, 752
CDC_A_MBHC_RESULT_1, 758
CDC_A_MBHC_RESULT_2, 758
CDC_A_MICB_1_CTL, 749
CDC_A_MICB_1_EN, 747
CDC_A_MICB_1_INT_RBIAS, 749
CDC_A_MICB_1_VAL, 748
CDC_A_MICB_2_EN, 750
CDC_A_NCP_BIAS, 765
CDC_A_NCP_CLIM, 766
CDC_A_NCP_CLK, 763
CDC_A_NCP_DEGLITCH, 763
CDC_A_NCP_EN, 762
CDC_A_NCP_FBCTRL, 764
CDC_A_NCP_TEST, 766
CDC_A_NCP_VCTRL, 765
CDC_A_PBUS_ADD_CSR, 786
CDC_A_PBUS_ADD_SEL, 787
CDC_A_PERPH_SUBTYPE, 742
CDC_A_PERPH_TYPE, 741
CDC_A_RDSON_MAX_DUTY_CYCLE, 785
CDC_A_REVISION1, 740
CDC_A_REVISION2, 740
CDC_A_REVISION3, 741
CDC_A_REVISION4, 741
CDC_A_RX_ATEST, 776
CDC_A_RX_CLOCK_DIVIDER, 767
CDC_A_RX_COM_BIAS_DAC, 769
CDC_A_RX_COM_OCP_COUNT, 768
CDC_A_RX_COM_OCP_CTL, 768
CDC_A_RX_EAR_EN, 775
CDC_A_RX_EAR_STATUS, 777
CDC_A_RX_HPH_BIAS_CNP, 770
CDC_A_RX_HPH_BIAS_LDO_OCP, 770
CDC_A_RX_HPH_BIAS_PA, 769
CDC_A_RX_HPH_CNP_EN, 771
CDC_A_RX_HPH_CNP_WG_CTL, 771
CDC_A_RX_HPH_CNP_WG_TIME, 772
CDC_A_RX_HPH_L_PA_DAC_CTL, 773
CDC_A_RX_HPH_L_TEST, 772
CDC_A_RX_HPH_R_PA_DAC_CTL, 774
CDC_A_RX_HPH_R_TEST, 774
CDC_A_RX_HPH_STATUS, 776
CDC_A_SLOPE_COMP_IP_ZERO, 785
CDC_A_SPKR_ANA_BIAS_SET, 779
CDC_A_SPKR_DAC_CTL, 777
CDC_A_SPKR_DRV_CLIP_DET, 777
CDC_A_SPKR_DRV_CTL, 778
CDC_A_SPKR_DRV_MISC, 781
CDC_A_SPKR_DRV_STATUS, 786
CDC_A_SPKR_OCP_CTL, 779
CDC_A_SPKR_PWRSTG_CTL, 780
CDC_A_SPKR_SAR_STATUS, 786
CDC_A_TX_1_2_OPAMP_BIAS, 760
CDC_A_TX_1_2_TXFE_CLKDIV, 761
CDC_A_TX_1_EN, 759
CDC_A_TX_2_EN, 759
CDC_A_TX_3_EN, 762
CDC_BOOST_FREQ_CLK_DIV, 789
CDC_BOOST_FREQ_CLK_ENABLE, 789
CDC_BOOST_FREQ_CLK_PHASE, 790
CDC_BOOST_FREQ_GANG_CTL1, 790
CDC_BOOST_FREQ_GANG_CTL2, 791
CDC_BOOST_FREQ_PERPH_SUBTYPE, 788
CDC_BOOST_FREQ_PERPH_TYPE, 788
CDC_D_CDC_ANA_CLK_CTL, 732
CDC_D_CDC_CONN_HPHR_DAC_CTL, 734
CDC_D_CDC_CONN_RX_LB_CTL, 735
CDC_D_CDC_CONN_RX1_CTL, 734
CDC_D_CDC_CONN_RX2_CTL, 735
CDC_D_CDC_CONN_RX3_CTL, 735
CDC_D_CDC_CONN_TX1_CTL, 733
CDC_D_CDC_CONN_TX2_CTL, 734
CDC_D_CDC_DIG_CLK_CTL, 732
CDC_D_CDC_RST_CTL, 731
CDC_D_CDC_RX_CTL1, 736
CDC_D_CDC_RX_CTL2, 736

CDC_D_CDC_RX_CTL3, 737
CDC_D_CDC_TOP_CLK_CTL, 731
CDC_D_DEM_BYPASS_DATA0, 738
CDC_D_DEM_BYPASS_DATA1, 738
CDC_D_DEM_BYPASS_DATA2, 739
CDC_D_DEM_BYPASS_DATA3, 739
CDC_D_GPIO_MODE, 729
CDC_D_HDRIVE_CTL, 731
CDC_D_INT_EN_CLR, 727
CDC_D_INT_EN_SET, 726
CDC_D_INT_LATCHED_CLR, 725
CDC_D_INT_LATCHED_STS, 727
CDC_D_INT_MID_SEL, 728
CDC_D_INT_PENDING_STS, 728
CDC_D_INT_POLARITY_HIGH, 724
CDC_D_INT_POLARITY_LOW, 725
CDC_D_INT_PRIORITY, 729
CDC_D_INT_RT_STS, 723
CDC_D_INT_SET_TYPE, 724
CDC_D_PERPH_SUBTYPE, 723
CDC_D_PERPH_TYPE, 723
CDC_D_PIN_CTL_DATA, 730
CDC_D_PIN_CTL_OE, 729
CDC_D_PIN_STATUS, 730
CDC_D_REVISION1, 722
CDC_D_REVISION2, 722
CDC_NCP_FREQ_CLK_DIV, 793
CDC_NCP_FREQ_CLK_ENABLE, 793
CDC_NCP_FREQ_CLK_PHASE, 794
CDC_NCP_FREQ_GANG_CTL1, 794
CDC_NCP_FREQ_GANG_CTL2, 795
CDC_NCP_FREQ_PERPH_SUBTYPE, 792
CDC_NCP_FREQ_PERPH_TYPE, 792
COIN_COIN_CHG_RSET, 146
COIN_COIN_CHG_VSET, 146
COIN_EN_CTL, 147
COIN_PERPH_SUBTYPE, 145
COIN_PERPH_TYPE, 145
COIN_STATUS1, 146
DIV_CLK1_DIV_CTL1, 388
DIV_CLK1_EN_CTL, 389
DIV_CLK1_PERPH_SUBTYPE, 387
DIV_CLK1_PERPH_TYPE, 387
DIV_CLK1_STATUS1, 388
DIV_CLK2_DIV_CTL1, 391
DIV_CLK2_EN_CTL, 392
DIV_CLK2_PERPH_SUBTYPE, 390
DIV_CLK2_PERPH_TYPE, 390
DIV_CLK2_STATUS1, 391
DIV_CLK3_DIV_CTL1, 394
DIV_CLK3_EN_CTL, 395
DIV_CLK3_PERPH_SUBTYPE, 393
DIV_CLK3_PERPH_TYPE, 393
DIV_CLK3_STATUS1, 394
GPIO1_DIG_IN_CTL, 459
GPIO1_DIG_OUT_CTL, 460
GPIO1_DIG_PULL_CTL, 459
GPIO1_DIG_VIN_CTL, 458
GPIO1_EN_CTL, 460
GPIO1_INT_EN_CLR, 455
GPIO1_INT_EN_SET, 455
GPIO1_INT_LATCHED_CLR, 454
GPIO1_INT_LATCHED_STS, 456
GPIO1_INT_MID_SEL, 456
GPIO1_INT_PENDING_STS, 456
GPIO1_INT_POLARITY_HIGH, 454
GPIO1_INT_POLARITY_LOW, 454
GPIO1_INT_PRIORITY, 457
GPIO1_INT_RT_STS, 453
GPIO1_INT_SET_TYPE, 453
GPIO1_MODE_CTL, 457
GPIO1_PERPH_SUBTYPE, 452
GPIO1_PERPH_TYPE, 452
GPIO1_STATUS1, 453
GPIO2_DIG_IN_CTL, 468
GPIO2_DIG_OUT_CTL, 469
GPIO2_DIG_PULL_CTL, 468
GPIO2_DIG_VIN_CTL, 467
GPIO2_EN_CTL, 469
GPIO2_INT_EN_CLR, 464
GPIO2_INT_EN_SET, 464
GPIO2_INT_LATCHED_CLR, 463
GPIO2_INT_LATCHED_STS, 465
GPIO2_INT_MID_SEL, 465
GPIO2_INT_PENDING_STS, 465
GPIO2_INT_POLARITY_HIGH, 463
GPIO2_INT_POLARITY_LOW, 463
GPIO2_INT_PRIORITY, 466
GPIO2_INT_RT_STS, 462
GPIO2_INT_SET_TYPE, 462
GPIO2_MODE_CTL, 466
GPIO2_PERPH_SUBTYPE, 461
GPIO2_PERPH_TYPE, 461
GPIO2_STATUS1, 462
GPIO3_DIG_IN_CTL, 477
GPIO3_DIG_OUT_CTL, 478
GPIO3_DIG_PULL_CTL, 477
GPIO3_DIG_VIN_CTL, 476
GPIO3_EN_CTL, 478
GPIO3_INT_EN_CLR, 473
GPIO3_INT_EN_SET, 473
GPIO3_INT_LATCHED_CLR, 472
GPIO3_INT_LATCHED_STS, 474
GPIO3_INT_MID_SEL, 474
GPIO3_INT_PENDING_STS, 474
GPIO3_INT_POLARITY_HIGH, 472
GPIO3_INT_POLARITY_LOW, 472
GPIO3_INT_PRIORITY, 475
GPIO3_INT_RT_STS, 471
GPIO3_INT_SET_TYPE, 471
GPIO3_MODE_CTL, 475
GPIO3_PERPH_SUBTYPE, 470
GPIO3_PERPH_TYPE, 470
GPIO3_STATUS1, 471
GPIO4_DIG_IN_CTL, 486
GPIO4_DIG_OUT_CTL, 487
GPIO4_DIG_PULL_CTL, 486
GPIO4_DIG_VIN_CTL, 485

GPIO4_EN_CTL, 487
GPIO4_INT_EN_CLR, 482
GPIO4_INT_EN_SET, 482
GPIO4_INT_LATCHED_CLR, 481
GPIO4_INT_LATCHED_STS, 483
GPIO4_INT_MID_SEL, 483
GPIO4_INT_PENDING_STS, 483
GPIO4_INT_POLARITY_HIGH, 481
GPIO4_INT_POLARITY_LOW, 481
GPIO4_INT_PRIORITY, 484
GPIO4_INT_RT_STS, 480
GPIO4_INT_SET_TYPE, 480
GPIO4_MODE_CTL, 484
GPIO4_PERPH_SUBTYPE, 479
GPIO4_PERPH_TYPE, 479
GPIO4_STATUS1, 480
INT_EN_CTL1, 20
INT_INT_RESEND_ALL, 19
INT_PERPH_SUBTYPE, 18
INT_PERPH_TYPE, 18
INT_STATUS1, 19
INT_STATUS2, 19
IRESERVED, 18
LBC_BAT_IF_BAT_PRES_STATUS, 106
LBC_BAT_IF_BAT_REMOVED_OFFMODE, 114
LBC_BAT_IF_BAT_TEMP_STATUS, 106
LBC_BAT_IF_BPD_CTRL, 112
LBC_BAT_IF_BTC_CTRL, 113
LBC_BAT_IF_INT_EN_CLR, 110
LBC_BAT_IF_INT_EN_SET, 110
LBC_BAT_IF_INT_LATCHED_CLR, 109
LBC_BAT_IF_INT_LATCHED_STS, 111
LBC_BAT_IF_INT_MID_SEL, 111
LBC_BAT_IF_INT_PENDING_STS, 111
LBC_BAT_IF_INT_POLARITY_HIGH, 108
LBC_BAT_IF_INT_POLARITY_LOW, 109
LBC_BAT_IF_INT_PRIORITY, 112
LBC_BAT_IF_INT_RT_STS, 107
LBC_BAT_IF_INT_SET_TYPE, 108
LBC_BAT_IF_PERPH_SUBTYPE, 105
LBC_BAT_IF_PERPH_TYPE, 105
LBC_BAT_IF_VREF_BAT_THM_CTRL, 113
LBC_BAT_IF_VREF_BAT_THM_STATUS, 107
LBC_CHGR_ATC_FAILED, 91
LBC_CHGR_ATC_STATUS, 78
LBC_CHGR_CHG_CTRL, 89
LBC_CHGR_CHG_FAILED, 90
LBC_CHGR_CHG_OPTION, 77
LBC_CHGR_CHG_STATUS, 77
LBC_CHGR_CHG_WDOG_DLY, 103
LBC_CHGR_CHG_WDOG_EN, 103
LBC_CHGR_CHG_WDOG_PET, 103
LBC_CHGR_CHG_WDOG_TIME, 99
LBC_CHGR_IBAT_ATC_B, 93
LBC_CHGR_IBAT_MAX, 87
LBC_CHGR_IBAT_SAFE, 88
LBC_CHGR_IBAT_TERM_CHGR, 94
LBC_CHGR_INT_EN_CLR, 82
LBC_CHGR_INT_EN_SET, 81
LBC_CHGR_INT_LATCHED_CLR, 81
LBC_CHGR_INT_LATCHED_STS, 83
LBC_CHGR_INT_MID_SEL, 84
LBC_CHGR_INT_PENDING_STS, 83
LBC_CHGR_INT_POLARITY_HIGH, 80
LBC_CHGR_INT_POLARITY_LOW, 80
LBC_CHGR_INT_PRIORITY, 84
LBC_CHGR_INT_RT_STS, 79
LBC_CHGR_INT_SET_TYPE, 79
LBC_CHGR_LED, 91
LBC_CHGR_PERPH_SUBTYPE, 76
LBC_CHGR_PERPH_TYPE, 76
LBC_CHGR_TCHG_MAX_EN, 97
LBC_CHGR_TCHG_MAX, 98
LBC_CHGR_TTRKL_MAX_EN, 94
LBC_CHGR_TTRKL_MAX, 95
LBC_CHGR_VBAT_DET_EN, 104
LBC_CHGR_VBAT_STATUS, 78
LBC_CHGR_VBAT_TRKL, 91
LBC_CHGR_VBAT_WEAK, 92
LBC_CHGR_VDD_MAX, 84
LBC_CHGR_VDD_SAFE, 85
LBC_CHGR_VDDMAX_GSM_ADJ, 86
LBC_CHGR_VIN_MIN, 89
LBC_MISC_BOOT_DONE, 127
LBC_MISC_BOOT, 126
LBC_MISC_CP_CTL, 128
LBC_MISC_LOW_POWER_MODE, 126
LBC_MISC_PERPH_SUBTYPE, 125
LBC_MISC_PERPH_TYPE, 125
LBC_MISC_RAW_DVDD_RB_SCRATCH, 129
LBC_MISC_RAW_XVDD_RB_SCRATCH, 129
LBC_MISC_VBAT_BOOT_THRES, 127
LBC_USB_ENUM_TIMER_STOP, 123
LBC_USB_ENUM_TIMER, 123
LBC_USB_INT_EN_CLR, 120
LBC_USB_INT_EN_SET, 119
LBC_USB_INT_LATCHED_CLR, 119
LBC_USB_INT_LATCHED_STS, 121
LBC_USB_INT_MID_SEL, 122
LBC_USB_INT_PENDING_STS, 121
LBC_USB_INT_POLARITY_HIGH, 118
LBC_USB_INT_POLARITY_LOW, 118
LBC_USB_INT_PRIORITY, 122
LBC_USB_INT_RT_STS, 117
LBC_USB_INT_SET_TYPE, 117
LBC_USB_PERPH_SUBTYPE, 115
LBC_USB_PERPH_TYPE, 115
LBC_USB_PWR_PTH_STS, 116
LBC_USB_USB_CHG_PTH_STS, 116
LBC_USB_USB_OVP_CTL, 122
LBC_USB_USB_SUSP, 123
LDO1_CONFIG_CTL, 573
LDO1_EN_CTL, 572
LDO1_INT_EN_CLR, 569
LDO1_INT_EN_SET, 569
LDO1_INT_LATCHED_CLR, 568
LDO1_INT_LATCHED_STS, 570
LDO1_INT_MID_SEL, 570

LDO1_INT_PENDING_STS, 570
LDO1_INT_POLARITY_HIGH, 568
LDO1_INT_POLARITY_LOW, 568
LDO1_INT_PRIORITY, 571
LDO1_INT_RT_STS, 567
LDO1_INT_SET_TYPE, 567
LDO1_MODE_CTL2, 571
LDO1_PD_CTL, 572
LDO1_SOFT_START_CTL, 572
LDO1_STATUS1, 566
LDO1_STATUS2, 567
LDO1_VS_CTL, 573
LDO10_CONFIG_CTL, 649
LDO10_EN_CTL, 648
LDO10_INT_EN_CLR, 645
LDO10_INT_EN_SET, 645
LDO10_INT_LATCHED_CLR, 645
LDO10_INT_LATCHED_STS, 646
LDO10_INT_MID_SEL, 646
LDO10_INT_PENDING_STS, 646
LDO10_INT_POLARITY_HIGH, 644
LDO10_INT_POLARITY_LOW, 644
LDO10_INT_PRIORITY, 647
LDO10_INT_RT_STS, 643
LDO10_INT_SET_TYPE, 644
LDO10_MODE_CTL2, 647
LDO10_PD_CTL, 648
LDO10_PERPH_TYPE, 642
LDO10_SOFT_START_CTL, 649
LDO10_STATUS1, 642
LDO10_STATUS2, 643
LDO10_VOLTAGE_CTL2, 647
LDO11_CONFIG_CTL, 657
LDO11_EN_CTL, 656
LDO11_INT_EN_CLR, 653
LDO11_INT_EN_SET, 653
LDO11_INT_LATCHED_CLR, 653
LDO11_INT_LATCHED_STS, 654
LDO11_INT_MID_SEL, 654
LDO11_INT_PENDING_STS, 654
LDO11_INT_POLARITY_HIGH, 652
LDO11_INT_POLARITY_LOW, 652
LDO11_INT_PRIORITY, 655
LDO11_INT_RT_STS, 651
LDO11_INT_SET_TYPE, 652
LDO11_MODE_CTL2, 655
LDO11_PD_CTL, 656
LDO11_PERPH_TYPE, 650
LDO11_SOFT_START_CTL, 657
LDO11_STATUS1, 650
LDO11_STATUS2, 651
LDO11_VOLTAGE_CTL2, 655
LDO12_CONFIG_CTL, 665
LDO12_EN_CTL, 664
LDO12_INT_EN_CLR, 661
LDO12_INT_EN_SET, 661
LDO12_INT_LATCHED_CLR, 661
LDO12_INT_LATCHED_STS, 662
LDO12_INT_MID_SEL, 662
LDO12_INT_PENDING_STS, 662
LDO12_INT_POLARITY_HIGH, 660
LDO12_INT_POLARITY_LOW, 660
LDO12_INT_PRIORITY, 663
LDO12_INT_RT_STS, 659
LDO12_INT_SET_TYPE, 660
LDO12_MODE_CTL2, 663
LDO12_PD_CTL, 664
LDO12_PERPH_TYPE, 658
LDO12_SOFT_START_CTL, 665
LDO12_STATUS1, 658
LDO12_STATUS2, 659
LDO12_VOLTAGE_CTL2, 663
LDO13_CONFIG_CTL, 673
LDO13_EN_CTL, 672
LDO13_INT_EN_CLR, 669
LDO13_INT_EN_SET, 669
LDO13_INT_LATCHED_CLR, 669
LDO13_INT_LATCHED_STS, 670
LDO13_INT_MID_SEL, 670
LDO13_INT_PENDING_STS, 670
LDO13_INT_POLARITY_HIGH, 668
LDO13_INT_POLARITY_LOW, 668
LDO13_INT_PRIORITY, 671
LDO13_INT_RT_STS, 667
LDO13_INT_SET_TYPE, 668
LDO13_MODE_CTL2, 671
LDO13_PD_CTL, 672
LDO13_PERPH_TYPE, 666
LDO13_SOFT_START_CTL, 673
LDO13_STATUS1, 666
LDO13_STATUS2, 667
LDO13_VOLTAGE_CTL2, 671
LDO14_CONFIG_CTL, 681
LDO14_EN_CTL, 680
LDO14_INT_EN_CLR, 677
LDO14_INT_EN_SET, 677
LDO14_INT_LATCHED_CLR, 677
LDO14_INT_LATCHED_STS, 678
LDO14_INT_MID_SEL, 678
LDO14_INT_PENDING_STS, 678
LDO14_INT_POLARITY_HIGH, 676
LDO14_INT_POLARITY_LOW, 676
LDO14_INT_PRIORITY, 679
LDO14_INT_RT_STS, 675
LDO14_INT_SET_TYPE, 676
LDO14_MODE_CTL2, 679
LDO14_PD_CTL, 680
LDO14_PERPH_TYPE, 674
LDO14_SOFT_START_CTL, 681
LDO14_STATUS1, 674
LDO14_STATUS2, 675
LDO14_VOLTAGE_CTL2, 679
LDO15_CONFIG_CTL, 689
LDO15_EN_CTL, 688
LDO15_INT_EN_CLR, 685
LDO15_INT_EN_SET, 685
LDO15_INT_LATCHED_CLR, 685
LDO15_INT_LATCHED_STS, 686

LDO15_INT_MID_SEL, 686
LDO15_INT_PENDING_STS, 686
LDO15_INT_POLARITY_HIGH, 684
LDO15_INT_POLARITY_LOW, 684
LDO15_INT_PRIORITY, 687
LDO15_INT_RT_STS, 683
LDO15_INT_SET_TYPE, 684
LDO15_MODE_CTL2, 687
LDO15_PD_CTL, 688
LDO15_PERPH_TYPE, 682
LDO15_SOFT_START_CTL, 689
LDO15_STATUS1, 682
LDO15_STATUS2, 683
LDO15_VOLTAGE_CTL2, 687
LDO16_CONFIG_CTL, 697
LDO16_EN_CTL, 696
LDO16_INT_EN_CLR, 693
LDO16_INT_EN_SET, 693
LDO16_INT_LATCHED_CLR, 693
LDO16_INT_LATCHED_STS, 694
LDO16_INT_MID_SEL, 694
LDO16_INT_PENDING_STS, 694
LDO16_INT_POLARITY_HIGH, 692
LDO16_INT_POLARITY_LOW, 692
LDO16_INT_PRIORITY, 695
LDO16_INT_RT_STS, 691
LDO16_INT_SET_TYPE, 692
LDO16_MODE_CTL2, 695
LDO16_PD_CTL, 696
LDO16_PERPH_TYPE, 690
LDO16_SOFT_START_CTL, 697
LDO16_STATUS1, 690
LDO16_STATUS2, 691
LDO16_VOLTAGE_CTL2, 695
LDO17_CONFIG_CTL, 705
LDO17_EN_CTL, 704
LDO17_INT_EN_CLR, 701
LDO17_INT_EN_SET, 701
LDO17_INT_LATCHED_CLR, 701
LDO17_INT_LATCHED_STS, 702
LDO17_INT_MID_SEL, 702
LDO17_INT_PENDING_STS, 702
LDO17_INT_POLARITY_HIGH, 700
LDO17_INT_POLARITY_LOW, 700
LDO17_INT_PRIORITY, 703
LDO17_INT_RT_STS, 699
LDO17_INT_SET_TYPE, 700
LDO17_MODE_CTL2, 703
LDO17_PD_CTL, 704
LDO17_PERPH_TYPE, 698
LDO17_SOFT_START_CTL, 705
LDO17_STATUS1, 698
LDO17_STATUS2, 699
LDO17_VOLTAGE_CTL2, 703
LDO18_CONFIG_CTL, 713
LDO18_EN_CTL, 712
LDO18_INT_EN_CLR, 709
LDO18_INT_EN_SET, 709
LDO18_INT_LATCHED_CLR, 709
LDO18_INT_LATCHED_STS, 710
LDO18_INT_MID_SEL, 710
LDO18_INT_PENDING_STS, 710
LDO18_INT_POLARITY_HIGH, 708
LDO18_INT_POLARITY_LOW, 708
LDO18_INT_PRIORITY, 711
LDO18_INT_RT_STS, 707
LDO18_INT_SET_TYPE, 708
LDO18_MODE_CTL2, 711
LDO18_PD_CTL, 712
LDO18_PERPH_TYPE, 706
LDO18_SOFT_START_CTL, 713
LDO18_STATUS1, 706
LDO18_STATUS2, 707
LDO18_VOLTAGE_CTL2, 711
LDO2_CONFIG_CTL, 582
LDO2_EN_CTL, 581
LDO2_INT_EN_CLR, 578
LDO2_INT_EN_SET, 578
LDO2_INT_LATCHED_CLR, 577
LDO2_INT_LATCHED_STS, 579
LDO2_INT_MID_SEL, 579
LDO2_INT_PENDING_STS, 579
LDO2_INT_POLARITY_HIGH, 577
LDO2_INT_POLARITY_LOW, 577
LDO2_INT_PRIORITY, 580
LDO2_INT_RT_STS, 576
LDO2_INT_SET_TYPE, 576
LDO2_MODE_CTL2, 580
LDO2_PD_CTL, 581
LDO2_SOFT_START_CTL, 581
LDO2_STATUS1, 575
LDO2_STATUS2, 576
LDO2_VS_CTL, 582
LDO3_CONFIG_CTL, 591
LDO3_EN_CTL, 590
LDO3_INT_EN_CLR, 587
LDO3_INT_EN_SET, 587
LDO3_INT_LATCHED_CLR, 586
LDO3_INT_LATCHED_STS, 588
LDO3_INT_MID_SEL, 588
LDO3_INT_PENDING_STS, 588
LDO3_INT_POLARITY_HIGH, 586
LDO3_INT_POLARITY_LOW, 586
LDO3_INT_PRIORITY, 589
LDO3_INT_RT_STS, 585
LDO3_INT_SET_TYPE, 585
LDO3_MODE_CTL2, 589
LDO3_PD_CTL, 590
LDO3_SOFT_START_CTL, 590
LDO3_STATUS1, 584
LDO3_STATUS2, 585
LDO3_VS_CTL, 591
LDO4_CONFIG_CTL, 600
LDO4_EN_CTL, 599
LDO4_INT_EN_CLR, 596
LDO4_INT_EN_SET, 596
LDO4_INT_LATCHED_CLR, 596
LDO4_INT_LATCHED_STS, 597

LDO4_INT_MID_SEL, 597
LDO4_INT_PENDING_STS, 597
LDO4_INT_POLARITY_HIGH, 595
LDO4_INT_POLARITY_LOW, 595
LDO4_INT_PRIORITY, 598
LDO4_INT_RT_STS, 594
LDO4_INT_SET_TYPE, 595
LDO4_MODE_CTL2, 598
LDO4_PD_CTL, 599
LDO4_PERPH_TYPE, 593
LDO4_SOFT_START_CTL, 600
LDO4_STATUS1, 593
LDO4_STATUS2, 594
LDO4_VOLTAGE_CTL2, 598
LDO5_CONFIG_CTL, 608
LDO5_EN_CTL, 607
LDO5_INT_EN_CLR, 604
LDO5_INT_EN_SET, 604
LDO5_INT_LATCHED_CLR, 604
LDO5_INT_LATCHED_STS, 605
LDO5_INT_MID_SEL, 605
LDO5_INT_PENDING_STS, 605
LDO5_INT_POLARITY_HIGH, 603
LDO5_INT_POLARITY_LOW, 603
LDO5_INT_PRIORITY, 606
LDO5_INT_RT_STS, 602
LDO5_INT_SET_TYPE, 603
LDO5_MODE_CTL2, 606
LDO5_PD_CTL, 607
LDO5_PERPH_TYPE, 601
LDO5_SOFT_START_CTL, 608
LDO5_STATUS1, 601
LDO5_STATUS2, 602
LDO5_VOLTAGE_CTL2, 606
LDO6_CONFIG_CTL, 616
LDO6_EN_CTL, 615
LDO6_INT_EN_CLR, 612
LDO6_INT_EN_SET, 612
LDO6_INT_LATCHED_CLR, 612
LDO6_INT_LATCHED_STS, 613
LDO6_INT_MID_SEL, 613
LDO6_INT_PENDING_STS, 613
LDO6_INT_POLARITY_HIGH, 611
LDO6_INT_POLARITY_LOW, 611
LDO6_INT_PRIORITY, 614
LDO6_INT_RT_STS, 610
LDO6_INT_SET_TYPE, 611
LDO6_MODE_CTL2, 614
LDO6_PD_CTL, 615
LDO6_PERPH_TYPE, 609
LDO6_SOFT_START_CTL, 616
LDO6_STATUS1, 609
LDO6_STATUS2, 610
LDO6_VOLTAGE_CTL2, 614
LDO7_CONFIG_CTL, 624
LDO7_EN_CTL, 623
LDO7_INT_EN_CLR, 620
LDO7_INT_EN_SET, 620
LDO7_INT_LATCHED_CLR, 620
LDO7_INT_LATCHED_STS, 621
LDO7_INT_MID_SEL, 621
LDO7_INT_PENDING_STS, 621
LDO7_INT_POLARITY_HIGH, 619
LDO7_INT_POLARITY_LOW, 619
LDO7_INT_PRIORITY, 622
LDO7_INT_RT_STS, 618
LDO7_INT_SET_TYPE, 619
LDO7_MODE_CTL2, 622
LDO7_PD_CTL, 623
LDO7_PERPH_TYPE, 617
LDO7_SOFT_START_CTL, 624
LDO7_STATUS1, 617
LDO7_STATUS2, 618
LDO7_VOLTAGE_CTL2, 622
LDO8_CONFIG_CTL, 632
LDO8_EN_CTL, 631
LDO8_INT_EN_CLR, 628
LDO8_INT_EN_SET, 628
LDO8_INT_LATCHED_CLR, 628
LDO8_INT_LATCHED_STS, 629
LDO8_INT_MID_SEL, 629
LDO8_INT_PENDING_STS, 629
LDO8_INT_POLARITY_HIGH, 627
LDO8_INT_POLARITY_LOW, 627
LDO8_INT_PRIORITY, 630
LDO8_INT_RT_STS, 626
LDO8_INT_SET_TYPE, 627
LDO8_MODE_CTL2, 630
LDO8_PD_CTL, 631
LDO8_PERPH_TYPE, 625
LDO8_SOFT_START_CTL, 632
LDO8_STATUS1, 625
LDO8_STATUS2, 626
LDO8_VOLTAGE_CTL2, 630
LDO9_CONFIG_CTL, 641
LDO9_EN_CTL, 640
LDO9_INT_EN_CLR, 637
LDO9_INT_EN_SET, 637
LDO9_INT_LATCHED_CLR, 636
LDO9_INT_LATCHED_STS, 638
LDO9_INT_MID_SEL, 638
LDO9_INT_PENDING_STS, 638
LDO9_INT_POLARITY_HIGH, 636
LDO9_INT_POLARITY_LOW, 636
LDO9_INT_PRIORITY, 639
LDO9_INT_RT_STS, 635
LDO9_INT_SET_TYPE, 635
LDO9_MODE_CTL2, 639
LDO9_PD_CTL, 640
LDO9_PERPH_TYPE, 634
LDO9_REVISION3, 633
LDO9_REVISION4, 633
LDO9_SOFT_START_CTL, 640
LDO9_STATUS1, 634
LDO9_STATUS2, 635
LDO9_VOLTAGE_CTL2, 639
MBG1_EN_CTL, 150
MBG1_MODE_CTRL, 149

MBG1_PERPH_TYPE, 148
MBG1_STATUS1, 148
MISC_TX_GTR_THRES_CTL, 73
MPP1_ANA_OUT_CTL, 415
MPP1_DIG_IN_CTL, 414
MPP1_DIG_VIN_CTL, 414
MPP1_EN_CTL, 415
MPP1_INT_EN_CLR, 409
MPP1_INT_EN_SET, 409
MPP1_INT_LATCHED_CLR, 409
MPP1_INT_LATCHED_STS, 410
MPP1_INT_MID_SEL, 411
MPP1_INT_PENDING_STS, 410
MPP1_INT_POLARITY_HIGH, 408
MPP1_INT_POLARITY_LOW, 408
MPP1_INT_PRIORITY, 411
MPP1_INT_RT_STS, 407
MPP1_INT_SET_TYPE, 408
MPP1_MODE_CTL, 411
MPP1_PERPH_SUBTYPE, 406
MPP1_PERPH_TYPE, 406
MPP1_SINK_CTL, 416
MPP1_STATUS1, 407
MPP2_ANA_IN_CTL, 427
MPP2_ANA_OUT_CTL, 426
MPP2_DIG_IN_CTL, 425
MPP2_DIG_VIN_CTL, 425
MPP2_EN_CTL, 426
MPP2_INT_EN_CLR, 420
MPP2_INT_EN_SET, 420
MPP2_INT_LATCHED_CLR, 420
MPP2_INT_LATCHED_STS, 421
MPP2_INT_MID_SEL, 422
MPP2_INT_PENDING_STS, 421
MPP2_INT_POLARITY_HIGH, 419
MPP2_INT_POLARITY_LOW, 419
MPP2_INT_PRIORITY, 422
MPP2_INT_RT_STS, 418
MPP2_INT_SET_TYPE, 419
MPP2_MODE_CTL, 422
MPP2_PERPH_SUBTYPE, 417
MPP2_PERPH_TYPE, 417
MPP2_SINK_CTL, 428
MPP2_STATUS1, 418
MPP3_ANA_OUT_CTL, 438
MPP3_DIG_IN_CTL, 437
MPP3_DIG_VIN_CTL, 437
MPP3_EN_CTL, 438
MPP3_INT_EN_CLR, 432
MPP3_INT_EN_SET, 432
MPP3_INT_LATCHED_CLR, 432
MPP3_INT_LATCHED_STS, 433
MPP3_INT_MID_SEL, 434
MPP3_INT_PENDING_STS, 433
MPP3_INT_POLARITY_HIGH, 431
MPP3_INT_POLARITY_LOW, 431
MPP3_INT_PRIORITY, 434
MPP3_INT_RT_STS, 430
MPP3_INT_SET_TYPE, 431
MPP3_MODE_CTL, 434
MPP3_PERPH_SUBTYPE, 429
MPP3_PERPH_TYPE, 429
MPP3_SINK_CTL, 439
MPP3_STATUS1, 430
MPP4_ANA_IN_CTL, 450
MPP4_ANA_OUT_CTL, 449
MPP4_DIG_IN_CTL, 448
MPP4_DIG_VIN_CTL, 448
MPP4_EN_CTL, 449
MPP4_INT_EN_CLR, 443
MPP4_INT_EN_SET, 443
MPP4_INT_LATCHED_CLR, 443
MPP4_INT_LATCHED_STS, 444
MPP4_INT_MID_SEL, 445
MPP4_INT_PENDING_STS, 444
MPP4_INT_POLARITY_HIGH, 442
MPP4_INT_POLARITY_LOW, 442
MPP4_INT_PRIORITY, 445
MPP4_INT_RT_STS, 441
MPP4_INT_SET_TYPE, 442
MPP4_MODE_CTL, 445
MPP4_PERPH_SUBTYPE, 440
MPP4_PERPH_TYPE, 440
MPP4_SINK_CTL, 451
MPP4_STATUS1, 441
PON_AVDD_VPH, 70
PON_DEBOUNCE_CTL, 66
PON_FSM_CTL, 72
PON_FSM_STATUS, 72
PON_INT_EN_CLR, 40
PON_INT_EN_SET, 39
PON_INT_LATCHED_CLR, 39
PON_INT_LATCHED_STS, 41
PON_INT_MID_SEL, 43
PON_INT_PENDING_STS, 42
PON_INT_POLARITY_HIGH, 37
PON_INT_POLARITY_LOW, 38
PON_INT_PRIORITY, 43
PON_INT_RT_STS, 36
PON_INT_SET_TYPE, 37
PON_KPDPWR_N_RESET_S1_TIMER, 43
PON_KPDPWR_N_RESET_S2_CTL, 45
PON_KPDPWR_N_RESET_S2_CTL2, 46
PON_KPDPWR_N_RESET_S2_TIMER, 44
PON_OVERTEMP_RESET_CTL, 64
PON_OVERTEMP_RESET_CTL2, 65
PON_PBS_INTERFACE, 71
PON_PERPH_SUBTYPE, 29
PON_PERPH_TYPE, 29
PON_PMIC_WD_RESET_PET, 62
PON_PMIC_WD_RESET_S1_TIMER, 52
PON_PMIC_WD_RESET_S2_CTL, 60
PON_PMIC_WD_RESET_S2_CTL2, 61
PON_PMIC_WD_RESET_S2_TIMER, 56
PON_POFF_REASON1, 33
PON_POFF_REASON2, 34
PON_PON_PBL_STATUS, 30
PON_PON_REASON1, 30

PON_PON_TRIGGER_EN, 68
PON_PON1_INTERFACE, 71
PON_PS_HOLD_RESET_CTL, 62
PON_PS_HOLD_RESET_CTL2, 63
PON_PULL_CTL, 66
PON_RESET_S3_SRC, 67
PON_RESET_S3_TIMER, 67
PON_RESIN_AND_KPDPWR_RESET_S1_TIMER, 49
PON_RESIN_AND_KPDPWR_RESET_S2_CTL, 51
PON_RESIN_AND_KPDPWR_RESET_S2_CTL2, 52
PON_RESIN_AND_KPDPWR_RESET_S2_TIMER, 50
PON_RESIN_N_RESET_S1_TIMER, 46
PON_RESIN_N_RESET_S2_CTL, 48
PON_RESIN_N_RESET_S2_CTL2, 49
PON_RESIN_N_RESET_S2_TIMER, 47
PON_SOFT_RESET_REASON1, 34
PON_SOFT_RESET_REASON2, 35
PON_SW_RESET_GO, 64
PON_SW_RESET_S2_CTL, 63
PON_SW_RESET_S2_CTL2, 64
PON_UVLO, 69
PON_WARM_RESET_REASON1, 31
PON_WARM_RESET_REASON2, 32
PON_WATCHDOG_LOCK, 69
PWM_ENABLE_CONTROL, 717
PWM_PERPH_SUBTYPE, 714
PWM_PERPH_TYPE, 714
PWM_PWM_FREQ_PREDIV_CLK, 715
PWM_PWM_SIZE_CLK, 715
PWM_PWM_SYNC, 717
PWM_PWM_TYPE_CONFIG, 716
PWM_PWM_VALUE_LSB, 716
PWM_PWM_VALUE_MSB, 717
RESERVED, 125
RESERVED, 138
RESERVED, 14
RESERVED, 145
RESERVED, 148
RESERVED, 151
RESERVED, 16
RESERVED, 175
RESERVED, 196
RESERVED, 21
RESERVED, 217
RESERVED, 261
RESERVED, 282
RESERVED, 29
RESERVED, 372
RESERVED, 375
RESERVED, 378
RESERVED, 381
RESERVED, 384
RESERVED, 387
RESERVED, 390
RESERVED, 393
RESERVED, 396
RESERVED, 399
RESERVED, 406
RESERVED, 417
RESERVED, 429
RESERVED, 440
RESERVED, 452
RESERVED, 461
RESERVED, 470
RESERVED, 479
RESERVED, 488
RESERVED, 490
RESERVED, 503
RESERVED, 511
RESERVED, 524
RESERVED, 532
RESERVED, 533
RESERVED, 545
RESERVED, 548
RESERVED, 549
RESERVED, 561
RESERVED, 565
RESERVED, 566
RESERVED, 575
RESERVED, 584
RESERVED, 593
RESERVED, 601
RESERVED, 609
RESERVED, 617
RESERVED, 625
RESERVED, 633
RESERVED, 642
RESERVED, 650
RESERVED, 658
RESERVED, 666
RESERVED, 674
RESERVED, 682
RESERVED, 690
RESERVED, 698
RESERVED, 706
RESERVED, 71
RESERVED, 71
RESERVED, 71
RESERVED, 71
RESERVED, 714
RESERVED, 719
RESERVED, 73
RESERVED, 739
RESERVED, 74
RESERVED, 750
RESERVED, 760
RESERVED, 760
RESERVED, 760
RESERVED, 781
RESERVED, 786
RESERVED, 786
RESERVED, 788
RESERVED, 792
REVID_PERPH_SUBTYPE, 14
REVID_PERPH_TYPE, 14
REVID_STATUS1, 15
RF_CLK1_DRV_CTL1, 379
RF_CLK1_EDGE_CTL1, 379

RF_CLK1_EN_CTL, 380
RF_CLK1_PERPH_SUBTYPE, 378
RF_CLK1_PERPH_TYPE, 378
RF_CLK1_STATUS1, 379
RF_CLK2_DRV_CTL1, 382
RF_CLK2_EDGE_CTL1, 382
RF_CLK2_EN_CTL, 383
RF_CLK2_PERPH_SUBTYPE, 381
RF_CLK2_PERPH_TYPE, 381
RF_CLK2_STATUS1, 382
RTC_ALARM_ALARM_CLR, 405
RTC_ALARM_ALARM_DATA0, 404
RTC_ALARM_ALARM_DATA1, 404
RTC_ALARM_ALARM_DATA2, 404
RTC_ALARM_ALARM_DATA3, 404
RTC_ALARM_EN_CTL1, 405
RTC_ALARM_INT_EN_CLR, 402
RTC_ALARM_INT_EN_SET, 402
RTC_ALARM_INT_LATCHED_CLR, 401
RTC_ALARM_INT_LATCHED_STS, 402
RTC_ALARM_INT_MID_SEL, 403
RTC_ALARM_INT_PENDING_STS, 403
RTC_ALARM_INT_POLARITY_HIGH, 401
RTC_ALARM_INT_POLARITY_LOW, 401
RTC_ALARM_INT_PRIORITY, 403
RTC_ALARM_INT_RT_STS, 400
RTC_ALARM_INT_SET_TYPE, 400
RTC_ALARM_PERPH_SUBTYPE, 399
RTC_ALARM_PERPH_TYPE, 399
RTC_ALARM_STATUS1, 400
RTC_RW_EN_CTL1, 397
RTC_RW_PERPH_SUBTYPE, 396
RTC_RW_PERPH_TYPE, 396
RTC_RW_RDATA0, 397
RTC_RW_RDATA1, 398
RTC_RW_RDATA2, 398
RTC_RW_RDATA3, 398
RTC_RW_STATUS1, 397
S1_CTRL_EN_CTL, 496
S1_CTRL_FT_CTL, 500
S1_CTRL_INT_EN_CLR, 493
S1_CTRL_INT_EN_SET, 492
S1_CTRL_INT_LATCHED_CLR, 492
S1_CTRL_INT_LATCHED_STS, 493
S1_CTRL_INT_MID_SEL, 494
S1_CTRL_INT_PENDING_STS, 494
S1_CTRL_INT_POLARITY_HIGH, 491
S1_CTRL_INT_POLARITY_LOW, 492
S1_CTRL_INT_PRIORITY, 494
S1_CTRL_INT_RT_STS, 491
S1_CTRL_INT_SET_TYPE, 491
S1_CTRL_MODE_CTL, 496
S1_CTRL_OCP, 501
S1_CTRL_PD_CTL, 497
S1_CTRL_PFM_CTL, 495
S1_CTRL_PULSE_SKIP_CTL, 497
S1_CTRL_PULSE_SKIP_THRES, 497
S1_CTRL_STATUS, 490
S1_CTRL_STEPPER_SS_CTL, 499
S1_CTRL_STEPPER_VS_CTL, 499
S1_CTRL_VOLTAGE_CTL2, 495
S1_PS_HCINT_CONTROL, 509
S1_PS_HCINT_EN, 509
S1_PS_INT_EN_CLR, 505
S1_PS_INT_EN_SET, 505
S1_PS_INT_LATCHED_CLR, 505
S1_PS_INT_LATCHED_STS, 506
S1_PS_INT_MID_SEL, 507
S1_PS_INT_PENDING_STS, 506
S1_PS_INT_POLARITY_HIGH, 504
S1_PS_INT_POLARITY_LOW, 504
S1_PS_INT_PRIORITY, 507
S1_PS_INT_RT_STS, 503
S1_PS_INT_SET_TYPE, 503
S1_PS_PFM_CURRENT_LIM_CTL, 508
S1_PS_PWM_CURRENT_LIM_CTL, 507
S2_CTRL_EN_CTL, 517
S2_CTRL_FT_CTL, 521
S2_CTRL_INT_EN_CLR, 514
S2_CTRL_INT_EN_SET, 513
S2_CTRL_INT_LATCHED_CLR, 513
S2_CTRL_INT_LATCHED_STS, 514
S2_CTRL_INT_MID_SEL, 515
S2_CTRL_INT_PENDING_STS, 515
S2_CTRL_INT_POLARITY_HIGH, 512
S2_CTRL_INT_POLARITY_LOW, 513
S2_CTRL_INT_PRIORITY, 515
S2_CTRL_INT_RT_STS, 512
S2_CTRL_INT_SET_TYPE, 512
S2_CTRL_MODE_CTL, 517
S2_CTRL_OCP, 522
S2_CTRL_PD_CTL, 518
S2_CTRL_PFM_CTL, 516
S2_CTRL_PULSE_SKIP_CTL, 518
S2_CTRL_PULSE_SKIP_THRES, 518
S2_CTRL_STATUS, 511
S2_CTRL_STEPPER_SS_CTL, 520
S2_CTRL_STEPPER_VS_CTL, 520
S2_CTRL_VOLTAGE_CTL2, 516
S2_FREQ_PERPH_SUBTYPE, 532
S2_FREQ_PERPH_TYPE, 532
S2_PS_HCINT_CONTROL, 530
S2_PS_HCINT_EN, 530
S2_PS_INT_EN_CLR, 526
S2_PS_INT_EN_SET, 526
S2_PS_INT_LATCHED_CLR, 526
S2_PS_INT_LATCHED_STS, 527
S2_PS_INT_MID_SEL, 528
S2_PS_INT_PENDING_STS, 527
S2_PS_INT_POLARITY_HIGH, 525
S2_PS_INT_POLARITY_LOW, 525
S2_PS_INT_PRIORITY, 528
S2_PS_INT_RT_STS, 524
S2_PS_INT_SET_TYPE, 524
S2_PS_PFM_CURRENT_LIM_CTL, 529
S2_PS_PWM_CURRENT_LIM_CTL, 528
S3_CTRL_EN_CTL, 539
S3_CTRL_FT_CTL, 543

S3_CTRL_INT_EN_CLR, 536
S3_CTRL_INT_EN_SET, 535
S3_CTRL_INT_LATCHED_CLR, 535
S3_CTRL_INT_LATCHED_STS, 536
S3_CTRL_INT_MID_SEL, 537
S3_CTRL_INT_PENDING_STS, 537
S3_CTRL_INT_POLARITY_HIGH, 534
S3_CTRL_INT_POLARITY_LOW, 535
S3_CTRL_INT_PRIORITY, 537
S3_CTRL_INT_RT_STS, 534
S3_CTRL_INT_SET_TYPE, 534
S3_CTRL_MODE_CTL, 539
S3_CTRL_PD_CTL, 540
S3_CTRL_PFM_CTL, 538
S3_CTRL_PULSE_SKIP_CTL, 540
S3_CTRL_PULSE_SKIP_THRES, 540
S3_CTRL_STATUS, 533
S3_CTRL_STEPPER_SS_CTL, 542
S3_CTRL_STEPPER_VS_CTL, 542
S3_CTRL_VOLTAGE_CTL2, 538
S3_FREQ_PERPH_SUBTYPE, 548
S3_FREQ_PERPH_TYPE, 548
S3_PS_PFM_CURRENT_LIM_CTL, 546
S3_PS_PWM_CURRENT_LIM_CTL, 545
S4_CTRL_EN_CTL, 555
S4_CTRL_FT_CTL, 559
S4_CTRL_INT_EN_CLR, 552
S4_CTRL_INT_EN_SET, 551
S4_CTRL_INT_LATCHED_CLR, 551
S4_CTRL_INT_LATCHED_STS, 552
S4_CTRL_INT_MID_SEL, 553
S4_CTRL_INT_PENDING_STS, 553
S4_CTRL_INT_POLARITY_HIGH, 550
S4_CTRL_INT_POLARITY_LOW, 551
S4_CTRL_INT_PRIORITY, 553
S4_CTRL_INT_RT_STS, 550
S4_CTRL_INT_SET_TYPE, 550
S4_CTRL_MODE_CTL, 555
S4_CTRL_PD_CTL, 556
S4_CTRL_PFM_CTL, 554
S4_CTRL_PULSE_SKIP_CTL, 556
S4_CTRL_PULSE_SKIP_THRES, 556
S4_CTRL_STATUS, 549
S4_CTRL_STEPPER_SS_CTL, 558
S4_CTRL_STEPPER_VS_CTL, 558
S4_CTRL_VOLTAGE_CTL2, 554
S4_FREQ_PERPH_SUBTYPE, 565
S4_FREQ_PERPH_TYPE, 565
S4_PS_PERPH_SUBTYPE, 561
S4_PS_PERPH_TYPE, 561
S4_PS_PFM_CURRENT_LIM_CTL, 563
S4_PS_PWM_CURRENT_LIM_CTL, 562
SLEEP_CLK1_CAL_RC3, 385
SLEEP_CLK1_CAL_RC4, 386
SLEEP_CLK1_EN_CTL, 385
SLEEP_CLK1_PERPH_SUBTYPE, 384
SLEEP_CLK1_PERPH_TYPE, 384
SLEEP_CLK1_SMPL_CTL1, 385
SPMI_ERROR_ADDR_HI, 23
SPMI_ERROR_ADDR_LO, 22
SPMI_ERROR_ADDR_MD, 23
SPMI_ERROR_DATA, 22
SPMI_ERROR_SYNDROME, 22
SPMI_INT_EN_CLR, 25
SPMI_INT_EN_SET, 25
SPMI_INT_LATCHED_CLR, 25
SPMI_INT_LATCHED_STS, 26
SPMI_INT_MID_SEL, 26
SPMI_INT_PENDING_STS, 26
SPMI_INT_POLARITY_HIGH, 24
SPMI_INT_POLARITY_LOW, 24
SPMI_INT_PRIORITY, 27
SPMI_INT_RT_STS, 23
SPMI_INT_SET_TYPE, 24
SPMI_PERPH_SUBTYPE, 21
SPMI_PERPH_TYPE, 21
SPMI_SPMI_BUF_CFG, 27
SPMI_SSC_DETECT_CFG, 27
TEMP_ALARM_EN_CTL1, 144
TEMP_ALARM_INT_EN_CLR, 141
TEMP_ALARM_INT_EN_SET, 141
TEMP_ALARM_INT_LATCHED_CLR, 141
TEMP_ALARM_INT_LATCHED_STS, 142
TEMP_ALARM_INT_MID_SEL, 142
TEMP_ALARM_INT_PENDING_STS, 142
TEMP_ALARM_INT_POLARITY_HIGH, 140
TEMP_ALARM_INT_POLARITY_LOW, 140
TEMP_ALARM_INT_PRIORITY, 143
TEMP_ALARM_INT_RT_STS, 139
TEMP_ALARM_INT_SET_TYPE, 140
TEMP_ALARM_PERPH_SUBTYPE, 138
TEMP_ALARM_PERPH_TYPE, 138
TEMP_ALARM_SHUTDOWN_CTL1, 143
TEMP_ALARM_SHUTDOWN_CTL2, 144
TEMP_ALARM_STATUS1, 139
VADC1_LC_USR_ADC_CH_SEL_CTL, 163
VADC1_LC_USR_ADC_DIG_PARAM, 165
VADC1_LC_USR_CONV_REQ, 166
VADC1_LC_USR_CONV_SEQ_CTL, 167
VADC1_LC_USR_CONV_SEQ_TRIG_CTL, 168
VADC1_LC_USR_DATA0, 172
VADC1_LC_USR_DATA1, 172
VADC1_LC_USR_EN_CTL1, 163
VADC1_LC_USR_FAST_AVG_CTL, 170
VADC1_LC_USR_FAST_AVG_EN, 170
VADC1_LC_USR_HIGH_THR0, 171
VADC1_LC_USR_HIGH_THR1, 171
VADC1_LC_USR_HW_SETTLE_DELAY, 166
VADC1_LC_USR_INT_EN_CLR, 159
VADC1_LC_USR_INT_EN_SET, 158
VADC1_LC_USR_INT_LATCHED_CLR, 157
VADC1_LC_USR_INT_LATCHED_STS, 159
VADC1_LC_USR_INT_MID_SEL, 161
VADC1_LC_USR_INT_PENDING_STS, 160
VADC1_LC_USR_INT_POLARITY_HIGH, 156
VADC1_LC_USR_INT_POLARITY_LOW, 157
VADC1_LC_USR_INT_PRIORITY, 161
VADC1_LC_USR_INT_RT_STS, 154

VADC1_LC_USR_INT_SET_TYPE, 155
VADC1_LC_USR_LOW_THR0, 170
VADC1_LC_USR_LOW_THR1, 171
VADC1_LC_USR_MEAS_INTERVAL_CTL, 169
VADC1_LC_USR_MEAS_INTERVAL_OP_CTL, 169
VADC1_LC_USR_MIN_DATA0, 173
VADC1_LC_USR_MIN_DATA1, 173
VADC1_LC_USR_MIN_LOW_THR0, 172
VADC1_LC_USR_MIN_LOW_THR1, 173
VADC1_LC_USR_MODE_CTL, 162
VADC1_LC_USR_PERPH_SUBTYPE, 151
VADC1_LC_USR_PERPH_TYPE, 151
VADC1_LC_USR_STATUS1, 152
VADC1_LC_USR_STATUS2, 152
VADC2_LC_BTM_2_ADC_DIG_PARAM, 232
VADC2_LC_BTM_2_CONV_REQ, 234
VADC2_LC_BTM_2_CONV_SEQ_CTL, 234
VADC2_LC_BTM_2_CONV_SEQ_TRIG_CTL, 236
VADC2_LC_BTM_2_EN_CTL1, 232
VADC2_LC_BTM_2_FAST_AVG_CTL, 239
VADC2_LC_BTM_2_FAST_AVG_EN, 239
VADC2_LC_BTM_2_HIGH_THR_INT_EN, 231
VADC2_LC_BTM_2_HW_SETTLE_DELAY, 233
VADC2_LC_BTM_2_INT_EN_CLR, 225
VADC2_LC_BTM_2_INT_EN_SET, 225
VADC2_LC_BTM_2_INT_LATCHED_CLR, 224
VADC2_LC_BTM_2_INT_LATCHED_STS, 226
VADC2_LC_BTM_2_INT_MID_SEL, 227
VADC2_LC_BTM_2_INT_PENDING_STS, 227
VADC2_LC_BTM_2_INT_POLARITY_HIGH, 223
VADC2_LC_BTM_2_INT_POLARITY_LOW, 223
VADC2_LC_BTM_2_INT_PRIORITY, 228
VADC2_LC_BTM_2_INT_RT_STS, 221
VADC2_LC_BTM_2_INT_SET_TYPE, 222
VADC2_LC_BTM_2_LOW_THR_INT_EN, 230
VADC2_LC_BTM_2_M0_ADC_CH_SEL_CTL, 232
VADC2_LC_BTM_2_M0_DATA0, 241
VADC2_LC_BTM_2_M0_DATA1, 241
VADC2_LC_BTM_2_M0_HIGH_THR0, 240
VADC2_LC_BTM_2_M0_HIGH_THR1, 241
VADC2_LC_BTM_2_M0_LOW_THR0, 240
VADC2_LC_BTM_2_M0_LOW_THR1, 240
VADC2_LC_BTM_2_M1_ADC_CH_SEL_CTL, 242
VADC2_LC_BTM_2_M1_DATA0, 256
VADC2_LC_BTM_2_M1_DATA1, 256
VADC2_LC_BTM_2_M1_HIGH_THR0, 243
VADC2_LC_BTM_2_M1_HIGH_THR1, 243
VADC2_LC_BTM_2_M1_LOW_THR0, 242
VADC2_LC_BTM_2_M1_LOW_THR1, 242
VADC2_LC_BTM_2_M1_MEAS_INTERVAL_CTL, 243
VADC2_LC_BTM_2_M2_ADC_CH_SEL_CTL, 244
VADC2_LC_BTM_2_M2_DATA0, 256
VADC2_LC_BTM_2_M2_DATA1, 257
VADC2_LC_BTM_2_M2_HIGH_THR0, 245
VADC2_LC_BTM_2_M2_HIGH_THR1, 245
VADC2_LC_BTM_2_M2_LOW_THR0, 244
VADC2_LC_BTM_2_M2_LOW_THR1, 244
VADC2_LC_BTM_2_M2_MEAS_INTERVAL_CTL, 245
VADC2_LC_BTM_2_M3_ADC_CH_SEL_CTL, 246
VADC2_LC_BTM_2_M3_DATA0, 257
VADC2_LC_BTM_2_M3_DATA1, 257
VADC2_LC_BTM_2_M3_HIGH_THR0, 247
VADC2_LC_BTM_2_M3_HIGH_THR1, 247
VADC2_LC_BTM_2_M3_LOW_THR0, 246
VADC2_LC_BTM_2_M3_LOW_THR1, 246
VADC2_LC_BTM_2_M3_MEAS_INTERVAL_CTL, 247
VADC2_LC_BTM_2_M4_ADC_CH_SEL_CTL, 248
VADC2_LC_BTM_2_M4_DATA0, 258
VADC2_LC_BTM_2_M4_DATA1, 258
VADC2_LC_BTM_2_M4_HIGH_THR0, 249
VADC2_LC_BTM_2_M4_HIGH_THR1, 249
VADC2_LC_BTM_2_M4_LOW_THR0, 248
VADC2_LC_BTM_2_M4_LOW_THR1, 248
VADC2_LC_BTM_2_M4_MEAS_INTERVAL_CTL, 249
VADC2_LC_BTM_2_M5_ADC_CH_SEL_CTL, 250
VADC2_LC_BTM_2_M5_DATA0, 258
VADC2_LC_BTM_2_M5_DATA1, 259
VADC2_LC_BTM_2_M5_HIGH_THR0, 251
VADC2_LC_BTM_2_M5_HIGH_THR1, 251
VADC2_LC_BTM_2_M5_LOW_THR0, 250
VADC2_LC_BTM_2_M5_LOW_THR1, 250
VADC2_LC_BTM_2_M5_MEAS_INTERVAL_CTL, 251
VADC2_LC_BTM_2_M6_ADC_CH_SEL_CTL, 252
VADC2_LC_BTM_2_M6_DATA0, 259
VADC2_LC_BTM_2_M6_DATA1, 259
VADC2_LC_BTM_2_M6_HIGH_THR0, 253
VADC2_LC_BTM_2_M6_HIGH_THR1, 253
VADC2_LC_BTM_2_M6_LOW_THR0, 252
VADC2_LC_BTM_2_M6_LOW_THR1, 252
VADC2_LC_BTM_2_M6_MEAS_INTERVAL_CTL, 253
VADC2_LC_BTM_2_M7_ADC_CH_SEL_CTL, 254
VADC2_LC_BTM_2_M7_DATA0, 260
VADC2_LC_BTM_2_M7_DATA1, 260
VADC2_LC_BTM_2_M7_HIGH_THR0, 255
VADC2_LC_BTM_2_M7_HIGH_THR1, 255
VADC2_LC_BTM_2_M7_LOW_THR0, 254
VADC2_LC_BTM_2_M7_LOW_THR1, 254
VADC2_LC_BTM_2_M7_MEAS_INTERVAL_CTL, 255
VADC2_LC_BTM_2_MEAS_INTERVAL_CTL, 236
VADC2_LC_BTM_2_MEAS_INTERVAL_CTL2, 237
VADC2_LC_BTM_2_MEAS_INTERVAL_OP_CTL, 238
VADC2_LC_BTM_2_MODE_CTL, 228
VADC2_LC_BTM_2_MULTI_MEAS_EN, 229
VADC2_LC_BTM_2_PERPH_SUBTYPE, 217
VADC2_LC_BTM_2_PERPH_TYPE, 217
VADC2_LC_BTM_2_STATUS_HIGH, 221
VADC2_LC_BTM_2_STATUS_LOW, 220
VADC2_LC_BTM_2_STATUS1, 218
VADC2_LC_BTM_2_STATUS2, 218
VADC3_LC_MDM_ADC_CH_SEL_CTL, 187
VADC3_LC_MDM_ADC_DIG_PARAM, 187
VADC3_LC_MDM_CONV_REQ, 188
VADC3_LC_MDM_CONV_SEQ_CTL, 188
VADC3_LC_MDM_CONV_SEQ_TRIG_CTL, 190
VADC3_LC_MDM_DATA0, 194
VADC3_LC_MDM_DATA1, 194
VADC3_LC_MDM_EN_CTL1, 186
VADC3_LC_MDM_FAST_AVG_CTL, 191

VADC3_LC_MDM_FAST_AVG_EN, 192
VADC3_LC_MDM_HIGH_THR0, 193
VADC3_LC_MDM_HIGH_THR1, 193
VADC3_LC_MDM_HW_SETTLE_DELAY, 187
VADC3_LC_MDM_INT_EN_CLR, 182
VADC3_LC_MDM_INT_EN_SET, 182
VADC3_LC_MDM_INT_LATCHED_CLR, 181
VADC3_LC_MDM_INT_LATCHED_STS, 183
VADC3_LC_MDM_INT_MID_SEL, 185
VADC3_LC_MDM_INT_PENDING_STS, 184
VADC3_LC_MDM_INT_POLARITY_HIGH, 180
VADC3_LC_MDM_INT_POLARITY_LOW, 180
VADC3_LC_MDM_INT_PRIORITY, 185
VADC3_LC_MDM_INT_RT_STS, 178
VADC3_LC_MDM_INT_SET_TYPE, 179
VADC3_LC_MDM_LOW_THR0, 192
VADC3_LC_MDM_LOW_THR1, 193
VADC3_LC_MDM_MEAS_INTERVAL_CTL, 190
VADC3_LC_MDM_MEAS_INTERVAL_OP_CTL, 191
VADC3_LC_MDM_MIN_DATA0, 195
VADC3_LC_MDM_MIN_DATA1, 195
VADC3_LC_MDM_MIN_LOW_THR0, 194
VADC3_LC_MDM_MIN_LOW_THR1, 195
VADC3_LC_MDM_MODE_CTL, 185
VADC3_LC_MDM_PERPH_SUBTYPE, 175
VADC3_LC_MDM_PERPH_TYPE, 175
VADC3_LC_MDM_STATUS1, 176
VADC3_LC_MDM_STATUS2, 176
VADC3_LC_VBMS_ADC_CH_SEL_CTL, 208
VADC3_LC_VBMS_ADC_DIG_PARAM, 208
VADC3_LC_VBMS_CONV_REQ, 209
VADC3_LC_VBMS_CONV_SEQ_CTL, 209
VADC3_LC_VBMS_CONV_SEQ_TRIG_CTL, 211
VADC3_LC_VBMS_DATA0, 215
VADC3_LC_VBMS_DATA1, 215
VADC3_LC_VBMS_EN_CTL1, 207
VADC3_LC_VBMS_FAST_AVG_CTL, 212
VADC3_LC_VBMS_FAST_AVG_EN, 213
VADC3_LC_VBMS_HIGH_THR0, 214
VADC3_LC_VBMS_HIGH_THR1, 214
VADC3_LC_VBMS_HW_SETTLE_DELAY, 208
VADC3_LC_VBMS_INT_EN_CLR, 203
VADC3_LC_VBMS_INT_EN_SET, 203
VADC3_LC_VBMS_INT_LATCHED_CLR, 202
VADC3_LC_VBMS_INT_LATCHED_STS, 204
VADC3_LC_VBMS_INT_MID_SEL, 206
VADC3_LC_VBMS_INT_PENDING_STS, 205
VADC3_LC_VBMS_INT_POLARITY_HIGH, 201
VADC3_LC_VBMS_INT_POLARITY_LOW, 201
VADC3_LC_VBMS_INT_PRIORITY, 206
VADC3_LC_VBMS_INT_RT_STS, 199
VADC3_LC_VBMS_INT_SET_TYPE, 200
VADC3_LC_VBMS_LOW_THR0, 213
VADC3_LC_VBMS_LOW_THR1, 214
VADC3_LC_VBMS_MEAS_INTERVAL_CTL, 211
VADC3_LC_VBMS_MEAS_INTERVAL_OP_CTL, 212
VADC3_LC_VBMS_MIN_DATA0, 216
VADC3_LC_VBMS_MIN_DATA1, 216
VADC3_LC_VBMS_MIN_LOW_THR0, 215
VADC3_LC_VBMS_MIN_LOW_THR1, 216
VADC3_LC_VBMS_MODE_CTL, 206
VADC3_LC_VBMS_PERPH_SUBTYPE, 196
VADC3_LC_VBMS_PERPH_TYPE, 196
VADC3_LC_VBMS_STATUS1, 197
VADC3_LC_VBMS_STATUS2, 197
VADC4_LC_VBAT_ADC_CH_SEL_CTL, 273
VADC4_LC_VBAT_ADC_DIG_PARAM, 273
VADC4_LC_VBAT_CONV_REQ, 274
VADC4_LC_VBAT_CONV_SEQ_CTL, 274
VADC4_LC_VBAT_CONV_SEQ_TRIG_CTL, 276
VADC4_LC_VBAT_DATA0, 280
VADC4_LC_VBAT_DATA1, 280
VADC4_LC_VBAT_EN_CTL1, 272
VADC4_LC_VBAT_FAST_AVG_CTL, 277
VADC4_LC_VBAT_FAST_AVG_EN, 278
VADC4_LC_VBAT_HIGH_THR0, 279
VADC4_LC_VBAT_HIGH_THR1, 279
VADC4_LC_VBAT_HW_SETTLE_DELAY, 273
VADC4_LC_VBAT_INT_EN_CLR, 268
VADC4_LC_VBAT_INT_EN_SET, 268
VADC4_LC_VBAT_INT_LATCHED_CLR, 267
VADC4_LC_VBAT_INT_LATCHED_STS, 269
VADC4_LC_VBAT_INT_MID_SEL, 271
VADC4_LC_VBAT_INT_PENDING_STS, 270
VADC4_LC_VBAT_INT_POLARITY_HIGH, 266
VADC4_LC_VBAT_INT_POLARITY_LOW, 266
VADC4_LC_VBAT_INT_PRIORITY, 271
VADC4_LC_VBAT_INT_RT_STS, 264
VADC4_LC_VBAT_INT_SET_TYPE, 265
VADC4_LC_VBAT_LOW_THR0, 278
VADC4_LC_VBAT_LOW_THR1, 279
VADC4_LC_VBAT_MEAS_INTERVAL_CTL, 276
VADC4_LC_VBAT_MEAS_INTERVAL_OP_CTL, 277
VADC4_LC_VBAT_MIN_DATA0, 281
VADC4_LC_VBAT_MIN_DATA1, 281
VADC4_LC_VBAT_MIN_LOW_THR0, 280
VADC4_LC_VBAT_MIN_LOW_THR1, 281
VADC4_LC_VBAT_MODE_CTL, 271
VADC4_LC_VBAT_PERPH_SUBTYPE, 261
VADC4_LC_VBAT_PERPH_TYPE, 261
VADC4_LC_VBAT_STATUS1, 262
VADC4_LC_VBAT_STATUS2, 262
VIB1_EN_CTL, 721
VIB1_PERPH_SUBTYPE, 719
VIB1_PERPH_TYPE, 719
VIB1_STATUS1, 720
VIB1_VOLTAGE_CTL2, 720
VREFLPDDR_EN_CTL1, 75
VREFLPDDR_STATUS1, 74
VREFLPDDR_VREF_LPDDR2_EN, 74

A Exhibit 1

PLEASE READ THIS LICENSE AGREEMENT (“AGREEMENT”) CAREFULLY. THIS AGREEMENT IS A BINDING LEGAL AGREEMENT ENTERED INTO BY AND BETWEEN YOU (OR IF YOU ARE ENTERING INTO THIS AGREEMENT ON BEHALF OF AN ENTITY, THEN THE ENTITY THAT YOU REPRESENT) AND QUALCOMM TECHNOLOGIES, INC. (“QTI” “WE” “OUR” OR “US”). THIS IS THE AGREEMENT THAT APPLIES TO YOUR USE OF THE DESIGNATED AND/OR ATTACHED DOCUMENTATION AND ANY UPDATES OR IMPROVEMENTS THEREOF (COLLECTIVELY, “MATERIALS”). BY USING OR COMPLETING THE INSTALLATION OF THE MATERIALS, YOU ARE ACCEPTING THIS AGREEMENT AND YOU AGREE TO BE BOUND BY ITS TERMS AND CONDITIONS. IF YOU DO NOT AGREE TO THESE TERMS, QTI IS UNWILLING TO AND DOES NOT LICENSE THE MATERIALS TO YOU. IF YOU DO NOT AGREE TO THESE TERMS YOU MUST DISCONTINUE AND YOU MAY NOT USE THE MATERIALS OR RETAIN ANY COPIES OF THE MATERIALS. ANY USE OR POSSESSION OF THE MATERIALS BY YOU IS SUBJECT TO THE TERMS AND CONDITIONS SET FORTH IN THIS AGREEMENT.

1.1 **License**. Subject to the terms and conditions of this Agreement, including, without limitation, the restrictions, conditions, limitations and exclusions set forth in this Agreement, Qualcomm Technologies, Inc. (“QTI”) hereby grants to you a nonexclusive, limited license under QTI’s copyrights to use the attached Materials; and to reproduce and redistribute a reasonable number of copies of the Materials. You may not use Qualcomm Technologies or its affiliates or subsidiaries name, logo or trademarks; and copyright, trademark, patent and any other notices that appear on the Materials may not be removed or obscured. QTI shall be free to use suggestions, feedback or other information received from You, without obligation of any kind to You. QTI may immediately terminate this Agreement upon your breach. Upon termination of this Agreement, Sections 1.2-4 shall survive.

1.2 **Indemnification**. You agree to indemnify and hold harmless QTI and its officers, directors, employees and successors and assigns against any and all third party claims, demands, causes of action, losses, liabilities, damages, costs and expenses, incurred by QTI (including but not limited to costs of defense, investigation and reasonable attorney’s fees) arising out of, resulting from or related to: (i) any breach of this Agreement by You; and (ii) your acts, omissions, products and services. If requested by QTI, You agree to defend QTI in connection with any third party claims, demands, or causes of action resulting from, arising out of or in connection with any of the foregoing.

1.3 **Ownership**. QTI (or its licensors) shall retain title and all ownership rights in and to the Materials and all copies thereof, and nothing herein shall be deemed to grant any right to You under any of QTI's or its affiliates’ patents. You shall not subject the Materials to any third party license terms (e.g., open source license terms). You shall not use the Materials for the purpose of identifying or providing evidence to support any potential patent infringement claim against QTI, its affiliates, or any of QTI’s or QTI’s affiliates’ suppliers and/or direct or indirect customers. QTI hereby reserves all rights not expressly granted herein.

1.4 **WARRANTY DISCLAIMER**. YOU EXPRESSLY ACKNOWLEDGE AND AGREE THAT THE USE OF THE MATERIALS IS AT YOUR SOLE RISK. THE MATERIALS AND TECHNICAL SUPPORT, IF ANY, ARE PROVIDED "AS IS" AND WITHOUT WARRANTY OF ANY KIND, WHETHER EXPRESS OR IMPLIED. QTI ITS LICENSORS AND AFFILIATES MAKE NO WARRANTIES, EXPRESS OR IMPLIED, WITH RESPECT TO THE MATERIALS OR ANY OTHER INFORMATION OR DOCUMENTATION PROVIDED UNDER THIS AGREEMENT, INCLUDING BUT NOT LIMITED TO ANY WARRANTY OF MERCHANTABILITY OR FITNESS FOR A PARTICULAR PURPOSE OR AGAINST INFRINGEMENT, OR ANY EXPRESS OR IMPLIED WARRANTY ARISING OUT OF TRADE USAGE OR OUT OF A COURSE OF DEALING OR COURSE OF PERFORMANCE. NOTHING CONTAINED IN THIS AGREEMENT SHALL BE CONSTRUED AS (I) A WARRANTY OR REPRESENTATION BY QTI, ITS LICENSORS OR AFFILIATES AS TO THE VALIDITY OR SCOPE OF ANY PATENT, COPYRIGHT OR OTHER INTELLECTUAL PROPERTY RIGHT OR (II) A WARRANTY OR REPRESENTATION BY QTI THAT ANY MANUFACTURE OR USE WILL BE FREE FROM INFRINGEMENT OF PATENTS, COPYRIGHTS OR OTHER INTELLECTUAL PROPERTY RIGHTS OF OTHERS, AND IT SHALL BE THE SOLE RESPONSIBILITY OF YOU TO MAKE SUCH DETERMINATION AS IS NECESSARY WITH RESPECT TO THE ACQUISITION OF LICENSES UNDER PATENTS AND OTHER INTELLECTUAL PROPERTY OF THIRD PARTIES.

1.5 **LIMITATION OF LIABILITY**. IN NO EVENT SHALL QTI, QTI’S AFFILIATES OR ITS LICENSORS BE LIABLE TO YOU FOR ANY INCIDENTAL, CONSEQUENTIAL OR SPECIAL DAMAGES, INCLUDING BUT NOT LIMITED TO ANY LOST PROFITS, LOST SAVINGS, OR OTHER INCIDENTAL DAMAGES, ARISING OUT OF THE USE OR INABILITY TO USE, OR THE DELIVERY OR FAILURE TO DELIVER, ANY OF THE MATERIALS, OR ANY BREACH OF ANY OBLIGATION UNDER THIS AGREEMENT, EVEN IF QTI HAS BEEN ADVISED OF THE POSSIBILITY OF SUCH DAMAGES. THE FOREGOING LIMITATION OF LIABILITY SHALL REMAIN IN FULL FORCE AND EFFECT REGARDLESS OF WHETHER YOUR REMEDIES HEREUNDER ARE DETERMINED TO HAVE FAILED OF THEIR ESSENTIAL PURPOSE. THE ENTIRE LIABILITY OF QTI, QTI’s AFFILIATES AND ITS LICENSORS, AND THE SOLE AND EXCLUSIVE REMEDY OF YOU, FOR ANY CLAIM OR CAUSE OF ACTION ARISING HEREUNDER (WHETHER IN CONTRACT, TORT, OR OTHERWISE) SHALL NOT EXCEED US$10.

2. **COMPLIANCE WITH LAWS; APPLICABLE LAW**. You agree to comply with all applicable local, international and national laws and regulations and with U.S. Export Administration Regulations, as they apply to the subject matter of this Agreement. This Agreement is governed by the laws of the State of California, excluding California's choice of law rules.

3. C**ONTRACTING PARTIES**. If the Materials are downloaded on any computer owned by a corporation or other legal entity, then this Agreement is formed by and between QTI and such entity. The individual accepting the terms of this Agreement represents and warrants to QTI that they have the authority to bind such entity to the terms and conditions of this Agreement.

4. **MISCELLANEOUS PROVISIONS**. This Agreement, together with all exhibits attached hereto, which are incorporated herein by this reference, constitutes the entire agreement between QTI and You and supersedes all prior negotiations, representations and agreements between the parties with respect to the subject matter hereof. No addition or modification of this Agreement shall be effective unless made in writing and signed by the respective representatives of QTI and You. The restrictions, limitations, exclusions and conditions set forth in this Agreement shall apply even if QTI or any of its affiliates becomes aware of or fails to act in a manner to address any violation or failure to comply therewith. You hereby acknowledge and agree that the restrictions, limitations, conditions and exclusions imposed in this Agreement on the rights granted in this Agreement are not a derogation of the benefits of such rights. You further acknowledges that, in the absence of such restrictions, limitations, conditions and exclusions, QTI would not have entered into this Agreement with You. Each party shall be responsible for and shall bear its own expenses in connection with this Agreement. If any of the provisions of this Agreement are determined to be invalid, illegal, or otherwise unenforceable, the remaining provisions shall remain in full force and effect. This Agreement is entered into solely in the English language, and if for any reason any other language version is prepared by any party, it shall be solely for convenience and the English version shall govern and control all aspects. If You are located in the province of Quebec, Canada, the following applies: The Parties hereby confirm they have requested this Agreement and all related documents be prepared in English.