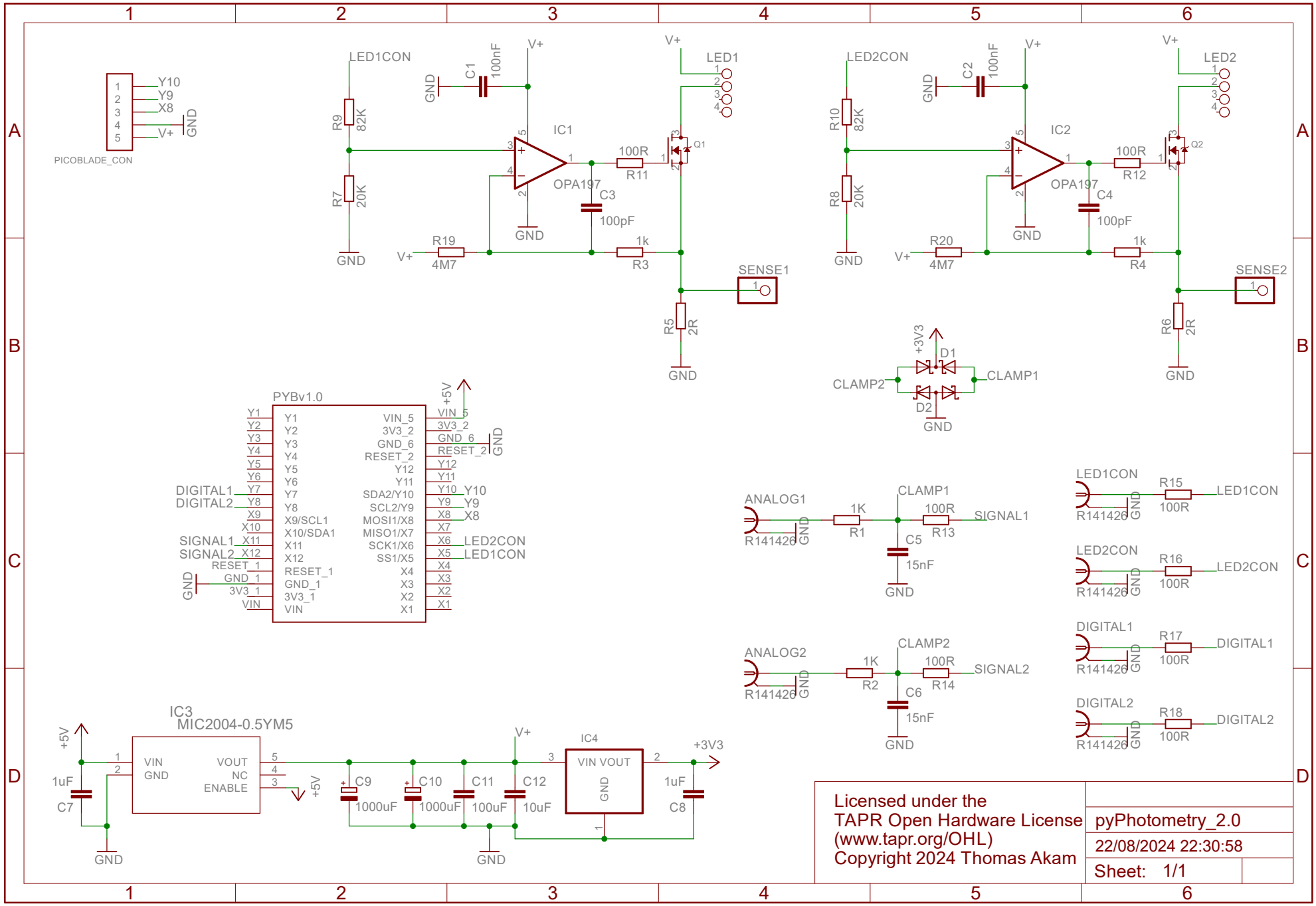

Licensed under the
TAPR Open Hardware License
(www.tapr.org/OHL)
Copyright 2024 Thomas Akam

pyPhotometry_2.0

22/08/2024 22:30:58

Sheet: 1/1