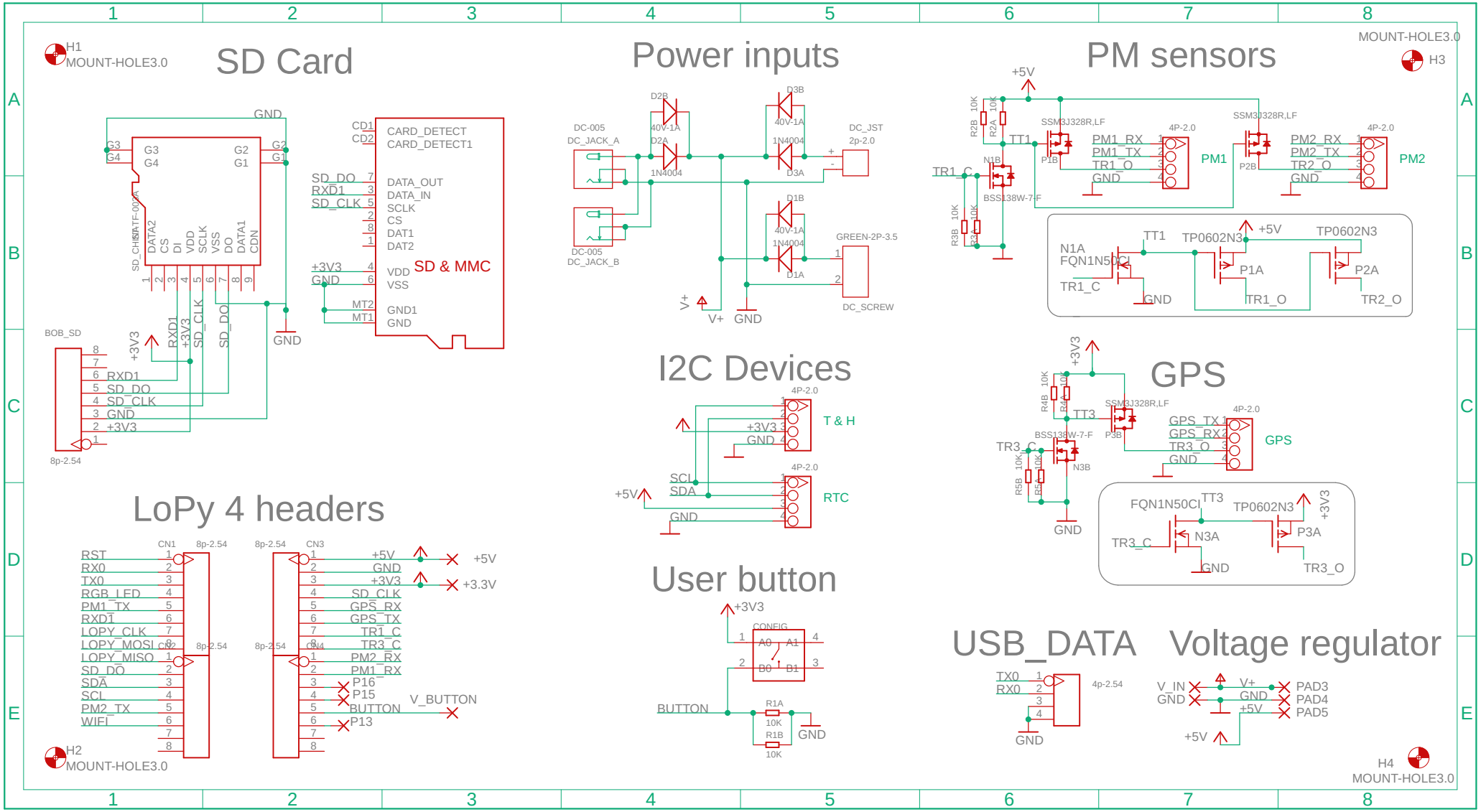

16/09/2019 11:12 f=0.93 C:\Users\Hazel\Documents\EAGLE\projects\Grove shim\Grove expansion v5.sch (Sheet: 1/2)