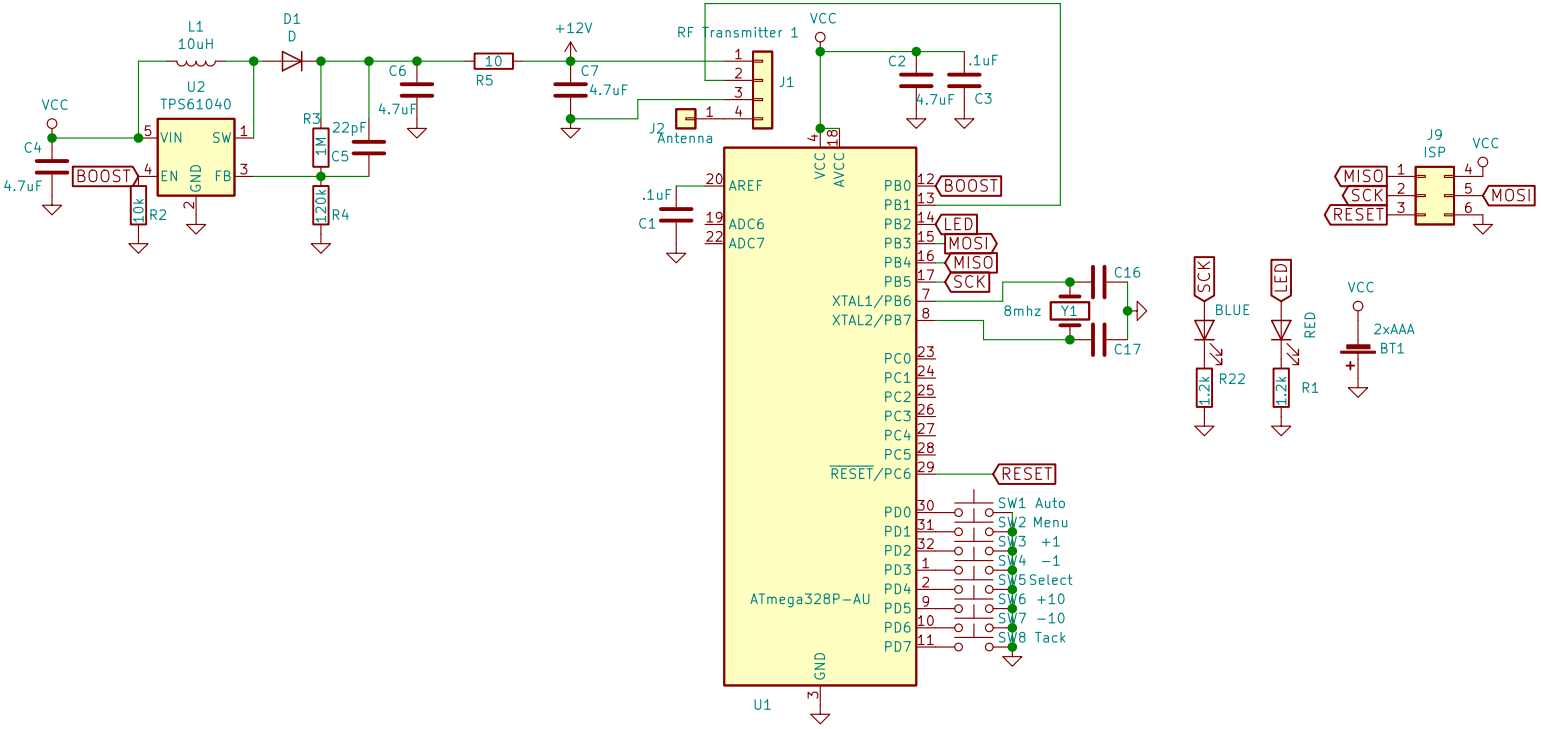

Sheet: /
File: pypilot_remote_rf.sch

Title:

Size: A4	Date: 16 nov 2017	**Rev:**
KiCad E.D.A. kicad 5.1.5+dfsg1-2build2		Id: 1/1