Local Cohomology: an algebraic introduction with geometric applications

M. P. Brodmann
Professor of Mathematics, Universität Zürich

R. Y. Sharp
Professor of Pure Mathematics, University of Sheffield

CAMBRIDGE
UNIVERSITY PRESS

PUBLISHED BY THE PRESS SYNDICATE OF THE UNIVERSITY OF CAMBRIDGE
The Pitt Building, Trumpington Street, Cambridge CB2 1RP, United Kingdom

CAMBRIDGE UNIVERSITY PRESS
The Edinburgh Building, Cambridge CB2 2RU, United Kingdom
40 West 20th Street, New York, NY 10011-4211, USA
10 Stamford Road, Oakleigh, Melbourne 3166, Australia

© Cambridge University Press 1998

This book is in copyright. Subject to statutory exception
and to the provisions of relevant collective licensing agreements,
no reproduction of any part may take place without
the written permission of Cambridge University Press.

First published 1998

Printed in the United Kingdom at the University Press, Cambridge

Typeset in Monotype Times New Roman 10/13pt

A catalogue record for this book is available from the British Library

Library of Congress Cataloguing in Publication data

Brodmann, M. P. (Markus P.), 1945–
Local cohomology: an algebraic introduction with geometric
applications / M. P. Brodmann, R. Y. Sharp.
p. cm.
Includes bibliographical references (p. –) and index.
ISBN 0 521 37286 0 (hardbound)
1. Algebra, Homological. 2. Sheaf theory. 3. Commutative algebra.
I. Sharp, R. Y. II. Title.
QA169.B745 1998
512′.55–dc21 97-29059 CIP

ISBN 0 521 37286 0 hardback

1771

11274

Contents

Preface		*page* ix
Notation and conventions		xiv
1	**The local cohomology functors**	1
1.1	Torsion functors	1
1.2	Local cohomology modules	3
1.3	Connected sequences of functors	10
2	**Torsion modules and ideal transforms**	17
2.1	Torsion modules	18
2.2	Ideal transforms	22
2.3	Geometrical significance	38
3	**The Mayer-Vietoris Sequence**	47
3.1	Comparison of systems of ideals	48
3.2	Construction of the sequence	51
3.3	Arithmetic rank	55
3.4	Direct limits	59
4	**Change of rings**	66
4.1	Some acyclic modules	67
4.2	The Independence Theorem	71
4.3	The Flat Base Change Theorem	75
5	**Other approaches**	82
5.1	Use of Čech complexes	83
5.2	Use of Koszul complexes	94
6	**Fundamental vanishing theorems**	102
6.1	Grothendieck's Vanishing Theorem	103
6.2	Connections with grade	107
6.3	Exactness of ideal transforms	112

6.4	An Affineness Criterion due to Serre	117
7	**Artinian local cohomology modules**	123
7.1	Artinian modules	123
7.2	Secondary representation	127
7.3	The Non-vanishing Theorem again	131
8	**The Lichtenbaum-Hartshorne Theorem**	136
8.1	Preparatory lemmas	137
8.2	The main theorem	144
9	**The Annihilator and Finiteness Theorems**	152
9.1	Finiteness dimensions	152
9.2	Adjusted depths	155
9.3	The first inequality	159
9.4	The second inequality	163
9.5	The main theorems	170
9.6	Extensions	175
10	**Matlis duality**	179
10.1	Indecomposable injective modules	179
10.2	Matlis duality	185
11	**Local duality**	197
11.1	Minimal injective resolutions	198
11.2	Local Duality Theorems	201
11.3	Some applications	207
12	**Foundations in the graded case**	216
12.1	*Injective modules	217
12.2	The *restriction property	221
12.3	The reconciliation	225
12.4	Some examples and applications	229
13	**Graded versions of basic theorems**	237
13.1	Fundamental theorems	237
13.2	*Indecomposable *injective modules	246
13.3	*Canonical modules	253
13.4	Graded local duality	258
14	**Links with projective varieties**	265
14.1	Affine algebraic cones	265
14.2	Projective varieties	269

15 Castelnuovo regularity 277
15.1 Finitely generated components 277
15.2 The basics of Castelnuovo regularity 281
15.3 Degrees of generators 289

16 Bounds of diagonal type 294
16.1 Some basic lemmas 295
16.2 The right bounding functions 299
16.3 Polynomial representations 305
16.4 Bounding systems for numerical invariants 309

17 Hilbert polynomials 312
17.1 The characteristic function 313
17.2 Bounds in terms of Hilbert coefficients 319

18 Applications to reductions of ideals 325
18.1 Reductions and integral closures 325
18.2 The analytic spread 330
18.3 Links with Castelnuovo regularity 333

19 Connectivity in algebraic varieties 342
19.1 The connectedness dimension 342
19.2 Complete local rings and connectivity 347
19.3 Some local dimensions 352
19.4 Connectivity of affine algebraic cones 359
19.5 Connectivity of projective varieties 360
19.6 Connectivity of intersections 363
19.7 The projective spectrum and connectedness 368

20 Links with sheaf cohomology 374
20.1 The Deligne Isomorphism 375
20.2 The graded Deligne Isomorphism 386
20.3 Links with sheaf theory 389
20.4 Applications to projective schemes 398
Bibliography 407
Index 410

To Alice
from the second author

Preface

One can take the view that local cohomology is an algebraic child of geometric parents. J.-P. Serre's fundamental paper 'Faisceaux algébriques cohérents' [56] represents a cornerstone of the development of cohomology as a tool in algebraic geometry: it foreshadowed many crucial ideas of modern sheaf cohomology. Serre's paper, published in 1955, also has many hints of themes which are central in local cohomology theory, and yet it was not until 1967 that the publication of R. Hartshorne's 'Local cohomology' Lecture Notes [18] (on A. Grothendieck's 1961 Harvard University seminar) confirmed the effectiveness of local cohomology as a tool in local algebra.

Since the appearance of the Grothendieck-Hartshorne notes, local cohomology has become indispensable for many mathematicians working in the theory of commutative Noetherian rings. But the Grothendieck-Hartshorne notes certainly take a geometric viewpoint at the outset: they begin with the cohomology groups of a topological space X with coefficients in an Abelian sheaf on X and supports in a locally closed subspace.

In the light of this, we feel that there is a need for an algebraic introduction to Grothendieck's local cohomology theory, and this book is intended to meet that need. Our book is designed primarily for graduate students who have some experience of basic commutative algebra and homological algebra; for definiteness, we have assumed that our readers are familiar with many of the basic sections of H. Matsumura's [35] and J. J. Rotman's [52]. Our approach is based on the fundamental 'δ-functor' techniques of homological algebra pioneered by Grothendieck, although we shall use the 'connected sequence' terminology of Rotman (see [52, pp. 212-214]).

However, we have not overlooked the geometric roots of the subject or the significance of the ideas for modern algebraic geometry. Indeed, the book presents several detailed examples designed to illustrate the geometrical significance of aspects of local cohomology; we have chosen examples which require

only basic ideas from algebraic geometry. In this spirit, there is one particula example, which we refer to as 'Hartshorne's Example', to which we retur several times in order to illustrate various points.

The geometric aspects are, in fact, nearer the surface of our treatment tha might initially be realised, because we make much use of ideal transforms an their universal properties, but it is only in the final chapter that we expos the fundamental links, expressed by means of the Deligne Correspondence between the ideal transform functors and their right derived functors on th one hand, and section functors of sheaves and sheaf cohomology on the other

We define the local cohomology functors to be the right derived functors of the appropriate torsion functor, although we establish in the first chapte that one can also construct local cohomology modules as direct limits of 'Ext' modules; we also present alternative constructions of local cohomology modules, one via cohomology of Čech complexes, and the other via direct limits of homology modules of Koszul complexes, in Chapter 5. (In fact, we do not use this Koszul complex approach very much at all in this book.)

Chapters 2, 3 and 4 include fundamental ideas concerning ideal transforms and their universal properties, the Mayer-Vietoris Sequence for local cohomology and the Independence and Flat Base Change Theorems: we regard all of these as technical cornerstones of the subject, and we certainly use them over and over again.

The main purpose of Chapters 6 and 7 is the presentation of some of Grothendieck's important vanishing theorems for local cohomology, which relate such vanishing to the concepts of dimension and grade. This work is mainly 'algebraic' in nature. In Chapter 8, we present another vanishing theorem for local cohomology modules, namely the local Lichtenbaum-Hartshorne Vanishing Theorem: this has an 'analytic' flavour, in the sense that it is intimately related with 'formal' methods and techniques, that is, with passage to completions of local rings and with the structure theory for complete local rings. The Lichtenbaum-Hartshorne Theorem has important geometric applications: for example, we show in Chapter 19 how it can be used to obtain major results about the connectivity of algebraic varieties.

Grothendieck's Finiteness Theorem and G. Faltings' Annihilator Theorem for local cohomology are the main subjects of Chapter 9. These two theorems also have major geometric applications, including, for example, in Macaulayfication of schemes. They also have significance for the theory of generalized Cohen-Macaulay modules and Buchsbaum modules, two concepts which feature briefly in the exercises in Chapter 9.

We have delayed the introduction of duality (until Chapters 10 and 11) because quite a lot can be achieved without it, and because, for our discussion

of duality, we have had to assume (on account of limitations of space) that the reader is familiar with the Matlis-Gabriel decomposition theory for injective modules over a commutative Noetherian ring (although we have reviewed that theory and provided some detailed proofs). We have not explicitly used dualizing complexes or derived categories, as it seems to us that such technicalities could daunt youthful readers and are not essential for a presentation of the main ideas. After the introduction of local duality in Chapter 11, we show how this duality can be used to derive some results established earlier in the book by different means.

The many recent research papers involving local cohomology of graded rings illustrate the importance of this aspect, and we have made some effort to develop the fundamentals of local cohomology in the graded case carefully in Chapters 12 and 13: various representations of local cohomology modules obtained in the earlier chapters inherit natural gradings when the ring, module and ideal concerned are all graded, and it seems to us that it is important to know that there is really only one sensible way of grading local cohomology modules in such circumstances. Our main aim in Chapter 12 has been to address this point. In Chapter 13, 'graded frills' are added to basic results proved earlier in the book.

The short Chapter 14 establishes some links between graded local cohomology and projective varieties; it has been included to provide a little geometric insight, and in order to motivate the work on Castelnuovo-Mumford regularity in Chapters 15-17, and the connections between ideal transforms and section functors of sheaves presented in Chapter 20.

In Chapter 15, we study the graded local cohomology of a homogeneous positively graded commutative Noetherian ring R with respect to the irrelevant ideal. One of the most important invariants in this context is Castelnuovo-Mumford regularity. This concept has, in addition to fundamental significance in projective algebraic geometry, connections with the degrees of generators of a finitely generated graded R-module M: it turns out that M can be generated by homogeneous elements of degrees not exceeding $\operatorname{reg}(M)$, the Castelnuovo-Mumford regularity of M. In turn, this leads on to connections with the theory of syzygies of finitely generated graded modules over polynomial rings over a field.

In certain circumstances, including when M is the vanishing ideal $I_{\mathbb{P}^r}(V)$ of a projective variety $V \subset \mathbb{P}^r$, the above-mentioned $\operatorname{reg}(M)$ coincides with $\operatorname{reg}^2(M)$, the Castelnuovo-Mumford regularity of M at and above level 2. In Chapters 16 and 17, we present bounds for the invariant $\operatorname{reg}^2(M)$. Chapter 16 contains *a priori* bounds which apply whenever the underlying homogeneous positively graded commutative Noetherian ring R has Artinian 0-th component. Chapter

17 is more specialized, and contains bounds expressed in terms of coefficien of Hilbert polynomials; our development of this theory includes a presentatio of basic ideas concerning cohomological Hilbert polynomials. The motivatio for our work in Chapter 17 comes from D. Mumford's classical work [38] Mumford established the existence of bounds of the type we present, but, i the spirit of this book, we have added some precision.

One could view Chapters 18 and 19 as propaganda for the effectiveness c local cohomology as a tool in algebra and geometry. Chapter 18 presents som applications of Castelnuovo-Mumford regularities to reductions of ideals. Thi is a fast developing area, and we have not attempted to give an encyclopaedi account; instead, we have tried to present the basic ideas and a few recen results to whet the reader's appetite. The highlight of Chapter 18 is a theoren of L. T. Hoa; the statement of this theorem is satisfyingly simple, and makes n mention of local cohomology, and yet Hoa's proof, which we present toward the end of the chapter, makes significant use of graded local cohomology.

Chapter 18 is a good advertisement for local cohomology as a 'hidden tool' and Chapter 19 continues this theme, although here the applications (to th connectivity of algebraic varieties) are more geometrical in nature. The onl appearances of local cohomology in Chapter 19 are in just two proofs, where a few central ideas (such as the Mayer-Vietoris Sequence and the Lichtenbaum-Hartshorne Vanishing Theorem) are used in crucial ways. No hypothesis o conclusion of any result in the chapter makes any mention of local cohomology and yet we are able to show how the two results whose proofs use loca cohomology can be developed into a theory which leads to proofs of majo results involving connectivity, such as Grothendieck's Connectedness Theorem, the Bertini-Gothendieck Connectivity Theorem, the Connectedness Theorem for Projective Varieties due to W. Barth, to W. Fulton and J. Hansen, and to G. Faltings, and a ring-theoretic version of Zariski's Main Theorem. This chapter is certainly a good advertisement for the power of local cohomology as a tool in algebraic geometry!

Finally, in Chapter 20, we bring the subject 'home to its roots', so to speak, by presenting links between local cohomology and the cohomology of quasi-coherent sheaves over certain Noetherian schemes. (Chapter 20 is the only one for which we have assumed that the reader has some basic knowledge about schemes and sheaves.)

Some parts of our presentation are fairly leisurely: this is deliberate, and has been done with graduate students in mind, because we found several preparatory topics where either we knew of no suitable text-book account, or we felt we had something to add to the existing accounts. Examples are the treatments of Matlis duality in Chapter 10, of *canonical modules in Chapter

13, of reductions of ideals in Chapter 18, and of connectedness dimensions in Chapter 19; also, our presentation in Chapter 5 of some links between Koszul complexes and local cohomology is deliberately slow.

Our philosophy throughout has been to try to give a careful and accessible presentation of basic ideas and some important results, illustrating the ideas with examples, to bring the reader to a level of expertise where he or she can approach with some confidence recent research papers in local cohomology. To help with this, the book contains a large number of exercises, and we have supplied hints for many of the more difficult ones.

We have tried out parts of the book, especially the earlier chapters, on some of our own graduate students, and their comments have influenced the final version. We are particularly grateful to Claudia Albertini, Carlo Matteotti, Francesco Mordasini, Henrike Petzl and Massoud Tousi for acting as 'guinea pigs', so to speak. We should also like to express our gratitude to Peter Gabriel, John Greenlees, Martin Holland and Josef Rung for continual interest and encouragement, and to the Schweizerischer Nationalfonds zur Förderung der wissenschaftlichen Forschung, the Forschungsrat des Instituts für Mathematik der Universität Zürich, and the University of Sheffield Research Fund, for financial support to enable several visits for intense collaboration on the book to take place. Both authors would like to thank Alice Sharp: Markus Brodmann thanks her for kind hospitality during pleasant visits to Sheffield for discussions on the book; and Rodney Sharp thanks her for much sympathetic support through the years during which this book was being written (as well as for many things which have nothing to do with local cohomology). Finally, we are very grateful to David Tranah and Roger Astley of Cambridge University Press for their continual encouragement and assistance over many years, and, not least, for their cooperation over our request that the blue stripe on the cover of the book should match the blue of the Zürich trams!

Markus Brodmann
Zürich

Rodney Sharp
Sheffield

April 1997

Notation and conventions

All rings considered in this book will have identity elements.

Throughout the book, R will always denote a non-trivial commutative Noetherian ring, and $\mathfrak{a}$ will denote an ideal of R. We shall only assume that R has additional properties (such as being local) when these are explicitly stated; however, the phrase '$(R, \mathfrak{m})$ is a local ring' will mean that R is a commutative Noetherian quasi-local ring with unique maximal ideal $\mathfrak{m}$.

For an ideal $\mathfrak{c}$ of R, we denote $\mathrm{Supp}(R/\mathfrak{c}) = \{\mathfrak{p} \in \mathrm{Spec}(R) : \mathfrak{p} \supseteq \mathfrak{c}\}$ by $\mathrm{Var}(\mathfrak{c})$, and refer to this as *the variety of* $\mathfrak{c}$.

By a *multiplicatively closed subset* of R, we shall mean a subset of R which is closed under multiplication and contains 1. It should be noted (and this comment is relevant for the final chapter) that if S is a non-empty subset of R which is closed under multiplication, then, even if S does not contain 1, we can form the commutative ring $S^{-1}R$ and, for an R-module M, the $S^{-1}R$-module $S^{-1}M$. In fact, $S^{-1}R \cong (S \cup \{1\})^{-1}R$, and, in $S^{-1}R$, the element sr/s, for $r \in R$ and $s \in S$, is independent of the choice of such s; similar comments apply to $S^{-1}M$.

The symbol $\mathbb{Z}$ will always denote the ring of integers; in addition, $\mathbb{N}$ (respectively $\mathbb{N}_0$) will always denote the set of positive (respectively non-negative) integers. The field of rational (respectively real, complex) numbers will be denoted by $\mathbb{Q}$ (respectively $\mathbb{R}$, $\mathbb{C}$).

The category of all modules and homomorphisms over a commutative ring R' will be denoted by $\mathscr{C}(R')$. When R' is $\mathbb{Z}$-graded, the category of all graded R'-modules and homogeneous R'-homomorphisms will be denoted by ${}^*\mathscr{C}(R')$.

The symbol $\subseteq$ will stand for 'is a subset of'; the symbol $\subset$ will be reserved to denote strict inclusion. Thus, for sets A, B, the expression $A \subset B$ means that $A \subseteq B$ and $A \neq B$.

The identity mapping on a set A will be denoted by Id_A. If $f : A \to C$ is a

mapping from the set A to the set C, and $S \subseteq A$, then $f\lceil_S : S \to C$ will denote the restriction of f to S. Thus $f\lceil_S(s) = f(s)$ for all $s \in S$.

Some of the exercises in the book are needed for the main development later in the book, and these exercises are marked with a '$\sharp$'; however, exercises which are used later in the book but only in other exercises have not been marked with a '$\sharp$'.

In some places in the book, we have used geometric diagrams to illustrate our ideas. Of course, proper visualization of affine varieties in dimensions greater than 3 is not possible, and, even for an affine variety in complex affine 3-space, only the real part can be illustrated in a diagram. We trust that the reader will view these diagrams with caution.

1

The local cohomology functors

The main objective of this chapter is to introduce the $\mathfrak{a}$-torsion functor $\Gamma_{\mathfrak{a}}$ (throughout the book, $\mathfrak{a}$ always denotes an ideal in a (non-trivial) commutative Noetherian ring R) and its right derived functors $H^i_{\mathfrak{a}}$ ($i \geq 0$), referred to as the local cohomology functors with respect to $\mathfrak{a}$. We shall see that $\Gamma_{\mathfrak{a}}$ is naturally equivalent to the functor $\varinjlim_{n\in\mathbb{N}} \mathrm{Hom}_R(R/\mathfrak{a}^n, \bullet)$ and, indeed, that $H^i_{\mathfrak{a}}$ is naturally equivalent to the functor $\varinjlim_{n\in\mathbb{N}} \mathrm{Ext}^i_R(R/\mathfrak{a}^n, \bullet)$ for each $i \geq 0$; moreover, as $\Gamma_{\mathfrak{a}}$ turns out to be left exact, the functors $\Gamma_{\mathfrak{a}}$ and $H^0_{\mathfrak{a}}$ are naturally equivalent.

This chapter also serves notice that our approach is based on fundamental techniques of homological commutative algebra, such as ones based on connected sequences of functors (see [52, pp. 212-214]): readers familiar with such ideas, and with the local cohomology functors, might like to just glance through this chapter and to move rapidly on to Chapter 2.

1.1 Torsion functors

1.1.1 Definition. For each R-module M, set $\Gamma_{\mathfrak{a}}(M) = \bigcup_{n\in\mathbb{N}}(0 :_M \mathfrak{a}^n)$, the set of elements of M which are annihilated by some power of $\mathfrak{a}$. Note that $\Gamma_{\mathfrak{a}}(M)$ is a submodule of M. For a homomorphism $f : M \longrightarrow N$ of R-modules, we have $f(\Gamma_{\mathfrak{a}}(M)) \subseteq \Gamma_{\mathfrak{a}}(N)$, and so there is a mapping $\Gamma_{\mathfrak{a}}(f) : \Gamma_{\mathfrak{a}}(M) \longrightarrow \Gamma_{\mathfrak{a}}(N)$ which agrees with f on each element of $\Gamma_{\mathfrak{a}}(M)$.

It is clear that, if $g : M \to N$ and $h : N \to L$ are further homomorphisms of R-modules and $r \in R$, then $\Gamma_{\mathfrak{a}}(h \circ f) = \Gamma_{\mathfrak{a}}(h) \circ \Gamma_{\mathfrak{a}}(f)$, $\Gamma_{\mathfrak{a}}(f + g) = \Gamma_{\mathfrak{a}}(f) + \Gamma_{\mathfrak{a}}(g)$, $\Gamma_{\mathfrak{a}}(rf) = r\Gamma_{\mathfrak{a}}(f)$ and $\Gamma_{\mathfrak{a}}(\mathrm{Id}_M) = \mathrm{Id}_{\Gamma_{\mathfrak{a}}(M)}$. Thus, with these assignments, $\Gamma_{\mathfrak{a}}$ becomes a covariant, R-linear functor from $\mathscr{C}(R)$ to itself. (We say that a functor $T : \mathscr{C}(R) \longrightarrow \mathscr{C}(R)$ is *R-linear* precisely when it is additive and $T(rf) = rT(f)$

for all $r \in R$ and all homomorphisms f of R-modules.) We call $\Gamma_{\mathfrak{a}}$ the $\mathfrak{a}$-*torsi functor*.

1.1.2 ♯Exercise. Let $\mathfrak{b}$ be a second ideal of R. Show that

$$\Gamma_{\mathfrak{a}}(\Gamma_{\mathfrak{b}}(M)) = \Gamma_{\mathfrak{a}+\mathfrak{b}}(M)$$

for each R-module M.

1.1.3 ♯Exercise. Let $\mathfrak{b}$ be a second ideal of R. Show that $\Gamma_{\mathfrak{a}} = \Gamma_{\mathfrak{b}}$ if and only $\sqrt{\mathfrak{a}} = \sqrt{\mathfrak{b}}$.

(The notation ♯, attached to some exercises, is explained in the section 'Notation and conventions' following the Preface.)

1.1.4 Exercise. Suppose that the ideal $\mathfrak{b}$ of R is a reduction of $\mathfrak{a}$, that is, $\mathfrak{b} \subseteq$ and there exists $s \in \mathbb{N}$ such that $\mathfrak{b}\mathfrak{a}^s = \mathfrak{a}^{s+1}$. Show that $\Gamma_{\mathfrak{a}} = \Gamma_{\mathfrak{b}}$.

1.1.5 Exercise. For a prime number p, find $\Gamma_{p\mathbb{Z}}(\mathbb{Q}/\mathbb{Z})$.

1.1.6 Lemma. *The $\mathfrak{a}$-torsion functor $\Gamma_{\mathfrak{a}} : \mathscr{C}(R) \longrightarrow \mathscr{C}(R)$ is left exact.*

Proof. Let $0 \longrightarrow L \xrightarrow{f} M \xrightarrow{g} N \longrightarrow 0$ be an exact sequence of R-module and R-homomorphisms. We must show that

$$0 \longrightarrow \Gamma_{\mathfrak{a}}(L) \xrightarrow{\Gamma_{\mathfrak{a}}(f)} \Gamma_{\mathfrak{a}}(M) \xrightarrow{\Gamma_{\mathfrak{a}}(g)} \Gamma_{\mathfrak{a}}(N)$$

is still exact. It is clear that $\Gamma_{\mathfrak{a}}(f)$ is a monomorphism and it follows immediately from 1.1.1 that $\Gamma_{\mathfrak{a}}(g) \circ \Gamma_{\mathfrak{a}}(f) = 0$, so that

$$\mathrm{Im}(\Gamma_{\mathfrak{a}}(f)) \subseteq \mathrm{Ker}(\Gamma_{\mathfrak{a}}(g)).$$

To prove the reverse inclusion, let $m \in \mathrm{Ker}(\Gamma_{\mathfrak{a}}(g))$. Thus $m \in \Gamma_{\mathfrak{a}}(M)$, so that there exists $n \in \mathbb{N}$ such that $\mathfrak{a}^n m = 0$, and $g(m) = 0$. Now there exists $l \in L$ such that $f(l) = m$, and our proof will be complete if we show that $l \in \Gamma_{\mathfrak{a}}(L)$. To achieve this, note that, for each $r \in \mathfrak{a}^n$, we have $f(rl) = rf(l) = rm = 0$, so that $rl = 0$ because f is a monomorphism. Hence $\mathfrak{a}^n l = 0$. □

The result of Lemma 1.1.6 will become transparent to many readers once we have covered a little more theory, and related the $\mathfrak{a}$-torsion functor $\Gamma_{\mathfrak{a}}$ to a functor defined in terms of direct limits of 'Hom' modules. However, before we proceed in that direction, we are going to introduce, at this early stage, the fundamental definition of the local cohomology modules of an R-module M with respect to $\mathfrak{a}$.

1.2 Local cohomology modules

1.2.1 Definitions. For $i \in \mathbb{N}_0$, the i-th right derived functor of $\Gamma_{\mathfrak{a}}$ is denoted by $H^i_{\mathfrak{a}}$ and will be referred to as the *i-th local cohomology functor with respect to* $\mathfrak{a}$.

For an R-module M, we shall refer to $H^i_{\mathfrak{a}}(M)$, that is, the result of applying the functor $H^i_{\mathfrak{a}}$ to M, as the *i-th local cohomology module of M with respect to* $\mathfrak{a}$, and to $\Gamma_{\mathfrak{a}}(M)$ as the *$\mathfrak{a}$-torsion submodule of M*. We shall say that M is *$\mathfrak{a}$-torsion-free* precisely when $\Gamma_{\mathfrak{a}}(M) = 0$, and that M is *$\mathfrak{a}$-torsion* precisely when $\Gamma_{\mathfrak{a}}(M) = M$, that is, if and only if each element of M is annihilated by some power of $\mathfrak{a}$.

It is probably appropriate for us to stress the implications of the above definition at this point, and list some basic properties of the local cohomology modules.

1.2.2 Properties of local cohomology modules. Let M be an arbitrary R-module.

(i) To calculate $H^i_{\mathfrak{a}}(M)$, one proceeds as follows. Take an injective resolution

$$I^\bullet : 0 \xrightarrow{d^{-1}} I^0 \xrightarrow{d^0} I^1 \longrightarrow \cdots \longrightarrow I^i \xrightarrow{d^i} I^{i+1} \longrightarrow \cdots$$

of M, so that there is an R-homomorphism $\alpha : M \longrightarrow I^0$ such that the sequence

$$0 \longrightarrow M \xrightarrow{\alpha} I^0 \xrightarrow{d^0} I^1 \longrightarrow \cdots \longrightarrow I^i \xrightarrow{d^i} I^{i+1} \longrightarrow \cdots$$

is exact. Apply the functor $\Gamma_{\mathfrak{a}}$ to the complex $I^\bullet$ to obtain

$$0 \xrightarrow{\Gamma_{\mathfrak{a}}(d^{-1})} \Gamma_{\mathfrak{a}}(I^0) \longrightarrow \cdots \longrightarrow \Gamma_{\mathfrak{a}}(I^i) \xrightarrow{\Gamma_{\mathfrak{a}}(d^i)} \Gamma_{\mathfrak{a}}(I^{i+1}) \longrightarrow \cdots$$

and take the i-th cohomology module of this complex; the result,

$$\operatorname{Ker}(\Gamma_{\mathfrak{a}}(d^i))/\operatorname{Im}(\Gamma_{\mathfrak{a}}(d^{i-1})),$$

which, by a standard fact of homological algebra, is independent (up to R-isomorphism) of the choice of injective resolution $I^\bullet$ of M, is $H^i_{\mathfrak{a}}(M)$.

(ii) Since $\Gamma_{\mathfrak{a}}$ is covariant and R-linear, it is automatic that each local cohomology functor $H^i_{\mathfrak{a}}$ ($i \in \mathbb{N}_0$) is again covariant and R-linear.

(iii) Since $\Gamma_{\mathfrak{a}}$ is left exact, $H^0_{\mathfrak{a}}$ is naturally equivalent to $\Gamma_{\mathfrak{a}}$. Thus, loosely, we can use this natural equivalence to identify these two functors.

(iv) The reader should be aware of the long exact sequence of local cohomology modules which results from a short exact sequence of R-modules and R-homomorphisms, and so we spell out the details here.

Let $0 \longrightarrow L \xrightarrow{f} M \xrightarrow{g} N \longrightarrow 0$ be an exact sequence of R-modules and R-homomorphisms. Then, for each $i \in \mathbb{N}_0$, there is a connecting homomorphism

$H^i_{\mathfrak{a}}(N) \to H^{i+1}_{\mathfrak{a}}(L)$, and these connecting homomorphisms make the resulting long sequence

$$\begin{tikzcd}
0 \arrow[r] & H^0_{\mathfrak{a}}(L) \arrow[r, "H^0_{\mathfrak{a}}(f)"] & H^0_{\mathfrak{a}}(M) \arrow[r, "H^0_{\mathfrak{a}}(g)"] & H^0_{\mathfrak{a}}(N) \\
\arrow[r] & H^1_{\mathfrak{a}}(L) \arrow[r, "H^1_{\mathfrak{a}}(f)"] & H^1_{\mathfrak{a}}(M) \arrow[r, "H^1_{\mathfrak{a}}(g)"] & H^1_{\mathfrak{a}}(N) \\
\arrow[r] & \cdots & & \cdots \\
\arrow[r] & H^i_{\mathfrak{a}}(L) \arrow[r, "H^i_{\mathfrak{a}}(f)"] & H^i_{\mathfrak{a}}(M) \arrow[r, "H^i_{\mathfrak{a}}(g)"] & H^i_{\mathfrak{a}}(N) \\
\arrow[r] & H^{i+1}_{\mathfrak{a}}(L) \arrow[r] & \cdots &
\end{tikzcd}$$

exact. The reader should also be aware of the 'natural' or 'functorial' properties of these long exact sequences: if

$$\begin{tikzcd}
0 \arrow[r] & L \arrow[r, "f"] \arrow[d, "\lambda"] & M \arrow[r, "g"] \arrow[d, "\mu"] & N \arrow[r] \arrow[d, "\nu"] & 0 \\
0 \arrow[r] & L' \arrow[r, "f'"] & M' \arrow[r, "g'"] & N' \arrow[r] & 0
\end{tikzcd}$$

is a commutative diagram of R-modules and R-homomorphisms with exact rows, then, for each $i \in \mathbb{N}_0$, we not only have a commutative diagram

$$\begin{tikzcd}
H^i_{\mathfrak{a}}(L) \arrow[r, "H^i_{\mathfrak{a}}(f)"] \arrow[d, "H^i_{\mathfrak{a}}(\lambda)"] & H^i_{\mathfrak{a}}(M) \arrow[r, "H^i_{\mathfrak{a}}(g)"] \arrow[d, "H^i_{\mathfrak{a}}(\mu)"] & H^i_{\mathfrak{a}}(N) \arrow[d, "H^i_{\mathfrak{a}}(\nu)"] \\
H^i_{\mathfrak{a}}(L') \arrow[r, "H^i_{\mathfrak{a}}(f')"] & H^i_{\mathfrak{a}}(M') \arrow[r, "H^i_{\mathfrak{a}}(g')"] & H^i_{\mathfrak{a}}(N')
\end{tikzcd}$$

(simply because $H^i_{\mathfrak{a}}$ is a functor!), but we also have a commutative diagram

$$\begin{tikzcd}
H^i_{\mathfrak{a}}(N) \arrow[r] \arrow[d, "H^i_{\mathfrak{a}}(\nu)"] & H^{i+1}_{\mathfrak{a}}(L) \arrow[d, "H^{i+1}_{\mathfrak{a}}(\lambda)"] \\
H^i_{\mathfrak{a}}(N') \arrow[r] & H^{i+1}_{\mathfrak{a}}(L')
\end{tikzcd}$$

in which the horizontal maps are the appropriate connecting homomorphisms.

The following remark will be used frequently in applications. It is an easy consequence of Exercise 1.1.3 and the definition of local cohomology functors in 1.2.1.

1.2.3 Remark. Let $\mathfrak{b}$ be a second ideal of R such that $\sqrt{\mathfrak{a}} = \sqrt{\mathfrak{b}}$. Then $H^i_{\mathfrak{a}} = H^i_{\mathfrak{b}}$ for all $i \in \mathbb{N}_0$, so that $H^i_{\mathfrak{a}}(M) = H^i_{\mathfrak{b}}(M)$ for each R-module M and all $i \in \mathbb{N}_0$.

The next four exercises might help the reader to consolidate the properties of local cohomology modules listed in 1.2.2. The first three of these exercises (for which non-trivial results from commutative algebra about injective dimension over the relevant rings are very helpful) give a tiny foretaste of results about the vanishing of local cohomology modules which are central to the subject, and which will feature prominently later in the book.

1.2.4 Exercise. Show that for every Abelian group (that is, $\mathbb{Z}$-module) G and for every $a \in \mathbb{Z}$, we have $H^i_{\mathbb{Z}a}(G) = 0$ for all $i \geq 2$.

1.2.5 Exercise. Suppose that $(R, \mathfrak{m})$ is a regular local ring of dimension d. Show that, for each R-module M, we have $H^i_{\mathfrak{a}}(M) = 0$ for all $i > d$.

1.2.6 Exercise. Suppose that $(R, \mathfrak{m})$ is a Gorenstein local ring (see [35, p. 142]) of dimension d. Show that, for each finitely generated R-module M of finite projective dimension, we have $H^i_{\mathfrak{a}}(M) = 0$ for all $i > d$. (Here is a hint: use the fact [35, Theorem 18.1] that the injective dimension of R as an R-module is d, and then use induction on the projective dimension of M.)

The next exercise investigates the behaviour of local cohomology modules under fraction formation: its results show that, speaking loosely, the local cohomology functors 'commute' with fraction formation. This is a fundamental fact in the subject; however, we shall actually derive it as an immediate consequence of a more general result in Chapter 4 concerning the behaviour of local cohomology under flat base change (and we shall not make use of it until it has been proved in Chapter 4). Nevertheless, even at this early stage, its proof should not present much difficulty for a reader familiar with the fact (proved in 10.1.13) that, if I is an injective R-module and S is a multiplicatively closed subset of R, then $S^{-1}I$ is an injective $S^{-1}R$-module.

1.2.7 Exercise. Let M be an R-module and let S be a multiplicatively closed subset of R. Show that $S^{-1}(\Gamma_{\mathfrak{a}}(M)) = \Gamma_{\mathfrak{a}S^{-1}R}(S^{-1}M)$, and that, for all $i \in \mathbb{N}_0$, there is an isomorphism of $S^{-1}R$-modules

$$S^{-1}(H^i_{\mathfrak{a}}(M)) \cong H^i_{\mathfrak{a}S^{-1}R}(S^{-1}M).$$

It is now time for us to relate the $\mathfrak{a}$-torsion functor $\Gamma_{\mathfrak{a}}$ to a functor defined in terms of direct limits of 'Hom' modules. Fundamental to the discussion is

the natural isomorphism, for an R-module M and $n \in \mathbb{N}$,

$$\phi := \phi_{\mathfrak{a}^n,M} : \mathrm{Hom}_R(R/\mathfrak{a}^n, M) \xrightarrow{\cong} (0 :_M \mathfrak{a}^n)$$

for which $\phi(f) = f(1 + \mathfrak{a}^n)$ for all $f \in \mathrm{Hom}_R(R/\mathfrak{a}^n, M)$. In fact, we are goin to put the various $\phi_{\mathfrak{a}^n,M}$ $(n \in \mathbb{N})$ together to obtain a natural isomorphisr $\varinjlim_{n\in\mathbb{N}} \mathrm{Hom}_R(R/\mathfrak{a}^n, M) \xrightarrow{\cong} \Gamma_{\mathfrak{a}}(M)$, but before we do this it might be helpful to th reader if we give some general considerations about functors and direct limit as the principles involved will be used numerous times in this book.

1.2.8 Remarks. Let $(\Lambda, \leq)$ be a (non-empty) directed partially ordered set, an suppose that we are given an inverse system of R-modules $(W_\alpha)_{\alpha\in\Lambda}$ over Λ with constituent R-homomorphisms $h^\alpha_\beta : W_\alpha \to W_\beta$ (for each $(\alpha, \beta) \in \Lambda \times \Lambda$ with $\alpha \geq \beta$). Let $T : \mathscr{C}(R) \times \mathscr{C}(R) \to \mathscr{C}(R)$ be an R-linear functor of tw variables which is contravariant in the first variable and covariant in th second. (A functor $U : \mathscr{C}(R) \times \mathscr{C}(R) \longrightarrow \mathscr{C}(R)$ is said to be *R-linear* precisel when it is additive and $U(rf, g) = rU(f, g) = U(f, rg)$ for all $r \in R$ and al homomorphisms f, g of R-modules.) We show now how these data give rise t a covariant, R-linear functor

$$\varinjlim_{\alpha\in\Lambda} T(W_\alpha, \bullet) : \mathscr{C}(R) \longrightarrow \mathscr{C}(R).$$

Let M, N be R-modules and let $f : M \longrightarrow N$ be an R-homomorphism. For $\alpha, \beta \in \Lambda$ with $\alpha \geq \beta$, the homomorphism $h^\alpha_\beta : W_\alpha \longrightarrow W_\beta$ induces an R-homomorphism

$$T(h^\alpha_\beta, M) : T(W_\beta, M) \longrightarrow T(W_\alpha, M),$$

and the fact that T is a functor ensures that the $T(h^\alpha_\beta, M)$ turn the family $(T(W_\alpha, M))_{\alpha\in\Lambda}$ into a direct system of R-modules and R-homomorphisms over Λ. We may therefore form $\varinjlim_{\alpha\in\Lambda} T(W_\alpha, M)$. Moreover, again for $\alpha, \beta \in \Lambda$ with $\alpha \geq \beta$, we have a commutative diagram

$$\begin{tikzcd}
T(W_\beta, M) \arrow[r, "T(h^\alpha_\beta, M)"] \arrow[d, "T(W_\beta, f)"] & T(W_\alpha, M) \arrow[d, "T(W_\alpha, f)"] \\
T(W_\beta, N) \arrow[r, "T(h^\alpha_\beta, N)"] & T(W_\alpha, N)
\end{tikzcd} ;$$

therefore the $T(W_\alpha, f)$ $(\alpha \in \Lambda)$ constitute a morphism of direct systems and so

induce an R-homomorphism

$$\varinjlim_{\alpha\in\Lambda} T(W_\alpha, f) : \varinjlim_{\alpha\in\Lambda} T(W_\alpha, M) \longrightarrow \varinjlim_{\alpha\in\Lambda} T(W_\alpha, N).$$

It is now straightforward to check that, in this way, $\varinjlim_{\alpha\in\Lambda} T(W_\alpha, \cdot)$ becomes a covariant, R-linear functor from $\mathscr{C}(R)$ to itself. Observe that, since passage to direct limits preserves exactness, if T is left exact, then so too is this new functor.

1.2.9 Examples. (i) Probably the most important examples for us of the ideas of 1.2.8 concern the case where we take for Λ the set $\mathbb{N}$ of positive integers with its usual ordering and the inverse system $(R/\mathfrak{a}^n)_{n\in\mathbb{N}}$ of R-modules under the natural homomorphisms $h^n_m : R/\mathfrak{a}^n \to R/\mathfrak{a}^m$ (for $n, m \in \mathbb{N}$ with $n \geq m$) (in such circumstances, $\mathfrak{a}^n \subseteq \mathfrak{a}^m$, of course). In this way, we obtain covariant, R-linear functors

$$\varinjlim_{n\in\mathbb{N}} \operatorname{Hom}_R(R/\mathfrak{a}^n, \cdot) \quad \text{and} \quad \varinjlim_{n\in\mathbb{N}} \operatorname{Ext}^i_R(R/\mathfrak{a}^n, \cdot) \ \ (i \in \mathbb{N}_0)$$

from $\mathscr{C}(R)$ to itself. Of course, the natural equivalence between the left exact functors Hom_R and Ext^0_R leads to a natural equivalence between the left exact functors

$$\varinjlim_{n\in\mathbb{N}} \operatorname{Hom}_R(R/\mathfrak{a}^n, \cdot) \quad \text{and} \quad \varinjlim_{n\in\mathbb{N}} \operatorname{Ext}^0_R(R/\mathfrak{a}^n, \cdot)$$

which we shall use without further comment.

(ii) Very similar considerations, this time based on the inclusion maps $\mathfrak{a}^n \to \mathfrak{a}^m$ (for $n, m \in \mathbb{N}$ with $n \geq m$), lead to functors (which are again covariant and R-linear)

$$\varinjlim_{n\in\mathbb{N}} \operatorname{Hom}_R(\mathfrak{a}^n, \cdot) \quad \text{and} \quad \varinjlim_{n\in\mathbb{N}} \operatorname{Ext}^i_R(\mathfrak{a}^n, \cdot) \ \ (i \in \mathbb{N}_0)$$

from $\mathscr{C}(R)$ to itself, and a natural equivalence between the left exact functors

$$\varinjlim_{n\in\mathbb{N}} \operatorname{Hom}_R(\mathfrak{a}^n, \cdot) \quad \text{and} \quad \varinjlim_{n\in\mathbb{N}} \operatorname{Ext}^0_R(\mathfrak{a}^n, \cdot).$$

These functors will be considered in detail in Chapter 2.

It will be convenient for us to consider situations slightly more general than that studied in 1.2.9(i) above.

1.2.10 Definition and Example. Let $(\Lambda, \leq)$ be a (non-empty) directed partially

ordered set. By an *inverse family of ideals (of R) over* Λ, we mean a fam $(\mathfrak{b}_\alpha)_{\alpha\in\Lambda}$ of ideals of R such that, whenever $(\alpha,\beta)\in\Lambda\times\Lambda$ with $\alpha\geq\beta$, we ha $\mathfrak{b}_\alpha\subseteq\mathfrak{b}_\beta$.

For example, if

$$\mathfrak{b}_1\supseteq\mathfrak{b}_2\supseteq\ldots\supseteq\mathfrak{b}_n\supseteq\mathfrak{b}_{n+1}\supseteq\ldots$$

is a descending chain of ideals of R, then $(\mathfrak{b}_n)_{n\in\mathbb{N}}$ is an inverse family of idea over $\mathbb{N}$ (with its usual ordering). In particular, the family $(\mathfrak{a}^n)_{n\in\mathbb{N}}$ is an inve family of ideals over $\mathbb{N}$.

Let $(\mathfrak{b}_\alpha)_{\alpha\in\Lambda}$ be an inverse family of ideals of R over Λ. Then the natu R-homomorphisms $h^\alpha_\beta : R/\mathfrak{b}_\alpha\to R/\mathfrak{b}_\beta$ (for $\alpha,\beta\in\Lambda$ with $\alpha\geq\beta$) turn $(R/\mathfrak{b}_\alpha)_\alpha$ into an inverse system over Λ, and so we can apply the ideas of 1.2.8 to produ covariant, R-linear functors

$$\varinjlim_{\alpha\in\Lambda}\operatorname{Hom}_R(R/\mathfrak{b}_\alpha,\,\bullet)\qquad\text{and}\qquad\varinjlim_{\alpha\in\Lambda}\operatorname{Ext}^i_R(R/\mathfrak{b}_\alpha,\,\bullet)\quad(i\in\mathbb{N}_0)$$

(from $\mathscr{C}(R)$ to itself), the first two of which are left exact and natural equivalent.

1.2.11 Theorem. *Let* $\mathfrak{B}=(\mathfrak{b}_\alpha)_{\alpha\in\Lambda}$ *be an inverse family of ideals of R over* Λ, *in* 1.2.10.

(i) *There is a covariant, R-linear functor* $\Gamma_{\mathfrak{B}}:\mathscr{C}(R)\to\mathscr{C}(R)$ *which is su that, for an R-module M,*

$$\Gamma_{\mathfrak{B}}(M)=\bigcup_{\alpha\in\Lambda}(0:_M\mathfrak{b}_\alpha),$$

and, for a homomorphism $f:M\longrightarrow N$ *of R-modules,* $\Gamma_{\mathfrak{B}}(f):\Gamma_{\mathfrak{B}}(M)\to$ $\Gamma_{\mathfrak{B}}(N)$ *is just the restriction of f to the submodule* $\Gamma_{\mathfrak{B}}(M)$ *of M.*

(ii) *There is a natural equivalence*

$$\phi'\ (=\phi'_{\mathfrak{B}}):\varinjlim_{\alpha\in\Lambda}\operatorname{Hom}_R(R/\mathfrak{b}_\alpha,\,\bullet)\xrightarrow{\cong}\Gamma_{\mathfrak{B}}$$

(of functors from $\mathscr{C}(R)$ *to itself) which is such that, for an R-modu M and* $\alpha\in\Lambda$, *the image under* ϕ'_M *of the natural image of an h* $\operatorname{Hom}_R(R/\mathfrak{b}_\alpha,M)$ *is* $h(1+\mathfrak{b}_\alpha)$. *Consequently,* $\Gamma_{\mathfrak{B}}$ *is left exact.*

(iii) *In particular, there is a natural equivalence*

$$\phi^0\ (=\phi^0_{\mathfrak{a}}):\varinjlim_{n\in\mathbb{N}}\operatorname{Hom}_R(R/\mathfrak{a}^n,\,\bullet)\xrightarrow{\cong}\Gamma_{\mathfrak{a}}$$

which is such that, for an R-module M and $n\in\mathbb{N}$, *the image under* ϕ^0_M *of the natural image of an* $h\in\operatorname{Hom}_R(R/\mathfrak{a}^n,M)$ *is* $h(1+\mathfrak{a}^n)$.

Proof. (i) This can be proved by straightforward modification of the ideas of 1.1.1, and so will be left to the reader.

(ii) Let $f : M \longrightarrow N$ be a homomorphism of R-modules. For each $\alpha \in \Lambda$, let $\phi_{\mathfrak{b}_\alpha,M} : \mathrm{Hom}_R(R/\mathfrak{b}_\alpha, M) \longrightarrow (0 :_M \mathfrak{b}_\alpha)$ be the R-isomorphism for which $\phi_{\mathfrak{b}_\alpha,M}(h) = h(1 + \mathfrak{b}_\alpha)$ for all $h \in \mathrm{Hom}_R(R/\mathfrak{b}_\alpha, M)$. Let $\alpha, \beta \in \Lambda$ with $\alpha \geq \beta$, and let $h^\alpha_\beta : R/\mathfrak{b}_\alpha \to R/\mathfrak{b}_\beta$ be as in 1.2.10. Since the diagram

$$\begin{tikzcd}
\mathrm{Hom}_R(R/\mathfrak{b}_\beta, M) \arrow[r, "\phi_{\mathfrak{b}_\beta,M}", "\cong"'] \arrow[d, "\mathrm{Hom}_R(h^\alpha_\beta,M)"'] & (0 :_M \mathfrak{b}_\beta) \arrow[d] \\
\mathrm{Hom}_R(R/\mathfrak{b}_\alpha, M) \arrow[r, "\phi_{\mathfrak{b}_\alpha,M}", "\cong"'] & (0 :_M \mathfrak{b}_\alpha)
\end{tikzcd}$$

(in which the right hand vertical map is inclusion) commutes, it follows that there is indeed an R-isomorphism

$$\phi'_M : \varinjlim_{\alpha\in\Lambda} \mathrm{Hom}_R(R/\mathfrak{b}_\alpha, M) \xrightarrow{\cong} \Gamma_{\mathfrak{B}}(M) = \bigcup_{\alpha\in\Lambda}(0 :_M \mathfrak{b}_\alpha)$$

as described in the statement of the theorem. It is easy to check that the diagram

$$\begin{tikzcd}
\varinjlim\limits_{\alpha\in\Lambda} \mathrm{Hom}_R(R/\mathfrak{b}_\alpha, M) \arrow[r, "\phi'_M", "\cong"'] \arrow[d, "\varinjlim\limits_{\alpha\in\Lambda} \mathrm{Hom}_R(R/\mathfrak{b}_\alpha,f)"'] & \Gamma_{\mathfrak{B}}(M) \arrow[d, "\Gamma_{\mathfrak{B}}(f)"] \\
\varinjlim\limits_{\alpha\in\Lambda} \mathrm{Hom}_R(R/\mathfrak{b}_\alpha, N) \arrow[r, "\phi'_N", "\cong"'] & \Gamma_{\mathfrak{B}}(N)
\end{tikzcd}$$

commutes, and the final claim is then immediate from 1.2.10.

(iii) This is now immediate from (ii), since when we apply (ii) to the family of ideals $\mathfrak{B} := (\mathfrak{a}^n)_{n\in\mathbb{N}}$, the functor $\Gamma_{\mathfrak{B}}$ of (i) is precisely the $\mathfrak{a}$-torsion functor $\Gamma_{\mathfrak{a}}$. □

We commented earlier that it would in time become transparent that $\Gamma_{\mathfrak{a}}$ is left exact: we had 1.2.11 in mind when we made that comment.

1.2.12 ♯Exercise. Provide a proof for part (i) of 1.2.11.

1.3 Connected sequences of functors

In this section, we are going to use the concepts of 'connected sequence functors' and 'strongly connected sequence of functors'. These are explain on p. 212 of Rotman's book [52]. For the reader's convenience, we recall he relevant definitions in the case of negative connected sequences, as we shall particularly concerned with this case.

1.3.1 Definition. Let R' be a commutative ring.

A sequence $(T^i)_{i\in\mathbb{N}_0}$ of covariant functors from $\mathscr{C}(R)$ to $\mathscr{C}(R')$ is said be a *negative connected sequence* (respectively, a *negative strongly connect sequence*) if the following conditions are satisfied.

(i) Whenever $0 \longrightarrow L \xrightarrow{f} M \xrightarrow{g} N \longrightarrow 0$ is an exact sequence in $\mathscr{C}(R$ there are defined connecting R'-homomorphisms

$$T^i(N) \longrightarrow T^{i+1}(L) \qquad \text{for all } i \in \mathbb{N}_0$$

such that the long sequence

$$\begin{array}{ccccccc}
0 & \longrightarrow & T^0(L) & \xrightarrow{T^0(f)} & T^0(M) & \xrightarrow{T^0(g)} & T^0(N) \\
 & \longrightarrow & T^1(L) & \xrightarrow{T^1(f)} & T^1(M) & \xrightarrow{T^1(g)} & T^1(N) \\
 & \longrightarrow & \cdots & & & & \cdots \\
 & \longrightarrow & T^i(L) & \xrightarrow{T^i(f)} & T^i(M) & \xrightarrow{T^i(g)} & T^i(N) \\
 & \longrightarrow & T^{i+1}(L) & \longrightarrow & \cdots & &
\end{array}$$

is a complex (respectively, is exact).

(ii) Whenever

$$\begin{array}{ccccccccc}
0 & \longrightarrow & L & \longrightarrow & M & \longrightarrow & N & \longrightarrow & 0 \\
 & & \downarrow{\scriptstyle\lambda} & & \downarrow{\scriptstyle\mu} & & \downarrow{\scriptstyle\nu} & & \\
0 & \longrightarrow & L' & \longrightarrow & M' & \longrightarrow & N' & \longrightarrow & 0
\end{array}$$

is a commutative diagram of R-modules and R-homomorphisms with exa rows, then there is induced, by λ, μ and ν, a chain map of the long complex (i) for the top row into the corresponding long complex for the bottom row.

It might help if we remind the reader of the convention regarding the raisin and lowering of indices in a situation such as that of 1.3.1, under which T would be written as T_{-i}: with this convention, $(T^i)_{i\geq 0}$ can be written as $(T_j)_{j\leq}$

We also point out that, if $T : \mathscr{C}(R) \to \mathscr{C}(R')$ is an additive covariant functor, such as $\Gamma_{\mathfrak{a}}$, then its sequence of right derived functors $(\mathscr{R}^i T)_{i \in \mathbb{N}_0}$ is a negative strongly connected sequence of covariant functors from $\mathscr{C}(R)$ to $\mathscr{C}(R')$; furthermore, if T is left exact, then $\mathscr{R}^0 T$ is naturally equivalent to T. We shall be concerned so often with left exact, additive, covariant functors that it will considerably simplify the exposition if we make now the following convention which will be in force for the rest of the book.

1.3.2 Convention. Whenever R' is a commutative ring and $T : \mathscr{C}(R) \longrightarrow \mathscr{C}(R')$ is a covariant, additive functor which is left exact, then we shall identify T with its 0-th right derived functor $\mathscr{R}^0 T$ in the natural way. Likewise, we shall identify Ext^0_R with Hom_R in the natural way.

1.3.3 Definition. Let R' be a commutative ring, and let $(T^i)_{i \in \mathbb{N}_0}$ and $(U^i)_{i \in \mathbb{N}_0}$ be two negative connected sequences of covariant functors from $\mathscr{C}(R)$ to $\mathscr{C}(R')$. A *homomorphism* $\Psi : (T^i)_{i \in \mathbb{N}_0} \longrightarrow (U^i)_{i \in \mathbb{N}_0}$ *of connected sequences* is a family $(\psi^i)_{i \in \mathbb{N}_0}$ where, for each $i \in \mathbb{N}_0$, $\psi^i : T^i \to U^i$ is a natural transformation of functors, and which is such that the following condition is satisfied: whenever $0 \longrightarrow L \longrightarrow M \longrightarrow N \longrightarrow 0$ is an exact sequence of R-modules and R-homomorphisms, then, for each $i \in \mathbb{N}_0$, the diagram

$$\begin{tikzcd} T^i(N) \arrow[r] \arrow[d, "\psi^i_N"] & T^{i+1}(L) \arrow[d, "\psi^{i+1}_L"] \\ U^i(N) \arrow[r] & U^{i+1}(L) \end{tikzcd}$$

(in which the horizontal maps are the appropriate connecting homomorphisms arising from the connected sequences) commutes.

A homomorphism $\Psi = (\psi^i)_{i \in \mathbb{N}_0} : (T^i)_{i \in \mathbb{N}_0} \longrightarrow (U^i)_{i \in \mathbb{N}_0}$ of connected sequences is said to be an *isomorphism (of connected sequences)* precisely when $\psi^i : T^i \to U^i$ is a natural equivalence of functors for each $i \in \mathbb{N}_0$.

We hope the reader is sufficiently adept at techniques similar to those on pp. 212–214 of [52] to find the following exercise straightforward; if not, he or she might like to study Theorem 10 (and its Corollary) of Section 6.5 of Northcott [43], which together provide a solution.

1.3.4 ♯Exercise. Let R' be a commutative ring, and let $(T^i)_{i \in \mathbb{N}_0}$ and $(U^i)_{i \in \mathbb{N}_0}$ be two negative connected sequences of covariant functors from $\mathscr{C}(R)$ to $\mathscr{C}(R')$.

(i) Let $\psi^0 : T^0 \to U^0$ be a natural transformation of functors. Assu that

(a) the sequence $(T^i)_{i\in\mathbb{N}_0}$ is strongly connected, and

(b) $T^i(I) = 0$ for all $i \in \mathbb{N}$ and all injective R-modules I.

Show that there exist uniquely determined natural transformations $\psi^i : T^i$ U^i $(i \in \mathbb{N})$ such that $(\psi^i)_{i\in\mathbb{N}_0} : (T^i)_{i\in\mathbb{N}_0} \longrightarrow (U^i)_{i\in\mathbb{N}_0}$ is a homomorphism connected sequences.

(ii) Let $\psi : T^0 \to U^0$ be a natural equivalence of functors. Assume that

(a) the sequence $(T^i)_{i\in\mathbb{N}_0}$ is strongly connected,

(b) the sequence $(U^i)_{i\in\mathbb{N}_0}$ is strongly connected, and

(c) $T^i(I) = U^i(I) = 0$ for all $i \in \mathbb{N}$ and all injective R-modules I.

By part (i), there is a unique homomorphism of connected sequences Ψ $(\psi^i)_{i\in\mathbb{N}_0} : (T^i)_{i\in\mathbb{N}_0} \longrightarrow (U^i)_{i\in\mathbb{N}_0}$ for which $\psi^0 = \psi$. Show that Ψ is actually isomorphism of connected sequences.

We shall not state explicitly the analogues of 1.3.1, 1.3.3 and 1.3.4 f positive connected sequences, but we warn the reader now that we shall u such analogues in Chapter 11.

The following consequence of 1.3.4(ii) essentially provides a characterizati of the right derived functors of a left exact, additive, covariant functor fro $\mathscr{C}(R)$ to $\mathscr{C}(R')$, where R' is a commutative ring.

1.3.5 Theorem. *Let R' be a commutative ring, and let T be a left exact, additi covariant functor from $\mathscr{C}(R)$ to $\mathscr{C}(R')$. Let $(T^i)_{i\in\mathbb{N}_0}$ be a negative strongly co nected sequence of covariant functors from $\mathscr{C}(R)$ to $\mathscr{C}(R')$ such that there exis a natural equivalence $\psi : T^0 \xrightarrow{\cong} T$ and such that $T^i(I) = 0$ for all $i \in \mathbb{N}$ a all injective R-modules I.*

Then there is a unique isomorphism of connected sequences

$$\Psi = (\psi^i)_{i\in\mathbb{N}_0} : (T^i)_{i\in\mathbb{N}_0} \xrightarrow{\cong} (\mathscr{R}^i T)_{i\in\mathbb{N}_0}$$

(of functors from $\mathscr{C}(R)$ to $\mathscr{C}(R')$) such that $\psi^0 = \psi$. (Of course, we are employi Convention 1.3.2.) □

The next exercise strengthens Exercise 1.2.7.

1.3.6 Exercise. Let S be a multiplicatively closed subset of R. Show that

$$\left(S^{-1}(H^i_{\mathfrak{a}}(\,\cdot\,))\right)_{i\in\mathbb{N}_0} \qquad \text{and} \qquad \left(H^i_{\mathfrak{a}S^{-1}R}(S^{-1}(\,\cdot\,))\right)_{i\in\mathbb{N}_0}$$

are isomorphic connected sequences of functors (from $\mathscr{C}(R)$ to $\mathscr{C}(S^{-1}R)$).

1.3.7 Remarks. Let $\mathfrak{B} = (\mathfrak{b}_\alpha)_{\alpha\in\Lambda}$ be an inverse family of ideals of R over Λ, as in 1.2.10.

Let us temporarily write $U^i := \varinjlim_{\alpha\in\Lambda} \operatorname{Ext}^i_R(R/\mathfrak{b}_\alpha, \cdot\,)$ for $i \in \mathbb{N}_0$. These functors were introduced in 1.2.10. We are going to show now how they fit together into a negative strongly connected sequence of functors (from $\mathscr{C}(R)$ to itself).

First of all, whenever $0 \longrightarrow L \longrightarrow M \longrightarrow N \longrightarrow 0$ is an exact sequence of R-modules and R-homomorphisms, there are induced, for each $\alpha \in \Lambda$, connecting homomorphisms

$$\operatorname{Ext}^i_R(R/\mathfrak{b}_\alpha, N) \longrightarrow \operatorname{Ext}^{i+1}_R(R/\mathfrak{b}_\alpha, L) \qquad (i \in \mathbb{N}_0)$$

which make the induced long sequence

$$\begin{array}{ccccccc}
0 & \longrightarrow & \operatorname{Hom}_R(R/\mathfrak{b}_\alpha, L) & \longrightarrow & \operatorname{Hom}_R(R/\mathfrak{b}_\alpha, M) & \longrightarrow & \operatorname{Hom}_R(R/\mathfrak{b}_\alpha, N) \\
 & \longrightarrow & \operatorname{Ext}^1_R(R/\mathfrak{b}_\alpha, L) & \longrightarrow & \operatorname{Ext}^1_R(R/\mathfrak{b}_\alpha, M) & \longrightarrow & \operatorname{Ext}^1_R(R/\mathfrak{b}_\alpha, N) \\
 & \longrightarrow & \cdots & & & & \cdots \\
 & \longrightarrow & \operatorname{Ext}^i_R(R/\mathfrak{b}_\alpha, L) & \longrightarrow & \operatorname{Ext}^i_R(R/\mathfrak{b}_\alpha, M) & \longrightarrow & \operatorname{Ext}^i_R(R/\mathfrak{b}_\alpha, N) \\
 & \longrightarrow & \operatorname{Ext}^{i+1}_R(R/\mathfrak{b}_\alpha, L) & \longrightarrow & \cdots & &
\end{array}$$

exact. Moreover, these connecting homomorphisms are such that, for $\alpha, \beta \in \Lambda$ with $\alpha \geq \beta$, the diagram

$$\begin{array}{ccc}
\operatorname{Ext}^i_R(R/\mathfrak{b}_\beta, N) & \longrightarrow & \operatorname{Ext}^{i+1}_R(R/\mathfrak{b}_\beta, L) \\
\Big\downarrow{\scriptstyle \operatorname{Ext}^i_R(h^\alpha_\beta, N)} & & \Big\downarrow{\scriptstyle \operatorname{Ext}^{i+1}_R(h^\alpha_\beta, L)} \\
\operatorname{Ext}^i_R(R/\mathfrak{b}_\alpha, N) & \longrightarrow & \operatorname{Ext}^{i+1}_R(R/\mathfrak{b}_\alpha, L)
\end{array}$$

(in which the horizontal maps are the appropriate connecting homomorphisms and $h^\alpha_\beta : R/\mathfrak{b}_\alpha \to R/\mathfrak{b}_\beta$ is the natural homomorphism) commutes for each $i \in \mathbb{N}_0$. It follows that these diagrams induce 'connecting' R-homomorphisms

$$U^i(N) = \varinjlim_{\alpha\in\Lambda} \operatorname{Ext}^i_R(R/\mathfrak{b}_\alpha, N) \longrightarrow U^{i+1}(L) = \varinjlim_{\alpha\in\Lambda} \operatorname{Ext}^{i+1}_R(R/\mathfrak{b}_\alpha, L)$$

(for $i \in \mathbb{N}_0$); moreover, the fact that passage to direct limits preserves exactne ensures that the resulting long sequence

$$\begin{array}{ccccccc}
0 & \longrightarrow & U^0(L) & \longrightarrow & U^0(M) & \longrightarrow & U^0(N) \\
 & \longrightarrow & U^1(L) & \longrightarrow & U^1(M) & \longrightarrow & U^1(N) \\
 & \longrightarrow & \cdots & & & & \cdots \\
 & \longrightarrow & U^i(L) & \longrightarrow & U^i(M) & \longrightarrow & U^i(N) \\
 & \longrightarrow & U^{i+1}(L) & \longrightarrow & \cdots & &
\end{array}$$

is exact. Next, standard properties of the extension functors ensure that, whe ever

$$\begin{tikzcd}
0 \arrow[r] & L \arrow[r] \arrow[d, "\lambda"] & M \arrow[r] \arrow[d, "\mu"] & N \arrow[r] \arrow[d, "\nu"] & 0 \\
0 \arrow[r] & L' \arrow[r] & M' \arrow[r] & N' \arrow[r] & 0
\end{tikzcd}$$

is a commutative diagram of R-modules and R-homomorphisms with exa rows, then, for all $\alpha \in \Lambda$, the diagram

$$\begin{tikzcd}
\mathrm{Ext}^i_R(R/\mathfrak{b}_\alpha, N) \arrow[r] \arrow[d, "\mathrm{Ext}^i_R(R/\mathfrak{b}_\alpha,\nu)"'] & \mathrm{Ext}^{i+1}_R(R/\mathfrak{b}_\alpha, L) \arrow[d, "\mathrm{Ext}^{i+1}_R(R/\mathfrak{b}_\alpha,\lambda)"] \\
\mathrm{Ext}^i_R(R/\mathfrak{b}_\alpha, N') \arrow[r] & \mathrm{Ext}^{i+1}_R(R/\mathfrak{b}_\alpha, L')
\end{tikzcd}$$

(in which the horizontal maps are the appropriate connecting homomorphism commutes for each $i \in \mathbb{N}_0$. It therefore follows that the diagram

$$\begin{tikzcd}
\varinjlim\limits_{\alpha\in\Lambda} \mathrm{Ext}^i_R(R/\mathfrak{b}_\alpha, N) \arrow[r] \arrow[d, "\varinjlim\limits_{\alpha\in\Lambda} \mathrm{Ext}^i_R(R/\mathfrak{b}_\alpha,\nu)"'] & \varinjlim\limits_{\alpha\in\Lambda} \mathrm{Ext}^{i+1}_R(R/\mathfrak{b}_\alpha, L) \arrow[d, "\varinjlim\limits_{\alpha\in\Lambda} \mathrm{Ext}^{i+1}_R(R/\mathfrak{b}_\alpha,\lambda)"] \\
\varinjlim\limits_{\alpha\in\Lambda} \mathrm{Ext}^i_R(R/\mathfrak{b}_\alpha, N') \arrow[r] & \varinjlim\limits_{\alpha\in\Lambda} \mathrm{Ext}^{i+1}_R(R/\mathfrak{b}_\alpha, L')
\end{tikzcd}$$

(in which the horizontal maps are again the appropriate connecting homomo phisms) commutes for all $i \in \mathbb{N}_0$.

We have thus made

$$\left(\varinjlim_{\alpha\in\Lambda} \operatorname{Ext}^i_R(R/\mathfrak{b}_\alpha, \,\cdot\,)\right)_{i\in\mathbb{N}_0}$$

into a negative strongly connected sequence of covariant functors from $\mathscr{C}(R)$ to $\mathscr{C}(R)$. Since $\varinjlim_{\alpha\in\Lambda} \operatorname{Ext}^i_R(R/\mathfrak{b}_\alpha, I) = 0$ for all $i \in \mathbb{N}$ whenever I is an injective R-module, it now follows from 1.3.5 that there is a unique isomorphism of connected sequences

$$\widetilde{\Psi} = \left(\widetilde{\psi}^i\right)_{i\in\mathbb{N}_0} : \left(\varinjlim_{\alpha\in\Lambda} \operatorname{Ext}^i_R(R/\mathfrak{b}_\alpha, \,\cdot\,)\right)_{i\in\mathbb{N}_0} \xrightarrow{\cong} \left(\mathscr{R}^i\Gamma_{\mathfrak{B}}\right)_{i\in\mathbb{N}_0}$$

for which $\widetilde{\psi}^0$ is the natural equivalence $\phi'_{\mathfrak{B}}$ of 1.2.11(ii); furthermore, both these connected sequences are isomorphic to the negative (strongly) connected sequence of functors formed by the right derived functors of

$$\varinjlim_{\alpha\in\Lambda} \operatorname{Hom}_R(R/\mathfrak{b}_\alpha, \,\cdot\,).$$

A special case of 1.3.7 describes local cohomology modules as direct limits of Ext modules. As this description is of crucial importance for our subject, we state it separately.

1.3.8 Theorem. *There is a unique isomorphism of connected sequences (of functors from $\mathscr{C}(R)$ to $\mathscr{C}(R)$)*

$$\Phi_{\mathfrak{a}} = \left(\phi^i_{\mathfrak{a}}\right)_{i\in\mathbb{N}_0} : \left(\varinjlim_{n\in\mathbb{N}} \operatorname{Ext}^i_R(R/\mathfrak{a}^n, \,\cdot\,)\right)_{i\in\mathbb{N}_0} \xrightarrow{\cong} \left(H^i_{\mathfrak{a}}\right)_{i\in\mathbb{N}_0}$$

which extends the natural equivalence $\phi^0_{\mathfrak{a}} : \varinjlim_{n\in\mathbb{N}} \operatorname{Hom}_R(R/\mathfrak{a}^n, \,\cdot\,) \xrightarrow{\cong} \Gamma_{\mathfrak{a}}$ *of* 1.2.11(iii). *Consequently, for each R-module M and each $i \in \mathbb{N}_0$,*

$$H^i_{\mathfrak{a}}(M) \cong \varinjlim_{n\in\mathbb{N}} \operatorname{Ext}^i_R(R/\mathfrak{a}^n, M). \ \square$$

1.3.9 ♯Exercise. Let M be an R-module, not necessarily finitely generated. Recall the definition of M-sequence from, for example, [35, p. 123].

(i) Show that, if $a_1, \ldots, a_n$ and $a'_1, a_2, \ldots, a_n$ are M-sequences (of elements of R), then so too is $a_1a'_1, a_2, \ldots, a_n$.

(ii) Show that, if $a_1, \ldots, a_n$ is an M-sequence (of elements of R) and $h_1, \ldots, h_n$ are positive integers, then $a_1^{h_1}, \ldots, a_n^{h_n}$ is also an M-sequence.

(iii) Show that, if $a_1, \ldots, a_n$ is an M-sequence of elements of $\mathfrak{a}$, then we h
$\mathrm{Ext}^i_R(R/\mathfrak{a}, M) = 0$ for all $i = 0, \ldots, n-1$.

(iv) Show that, if $\mathfrak{a}$ contains an M-sequence of length n, then $H^i_{\mathfrak{a}}(M)$
for each $i = 0, \ldots, n-1$.

We shall pursue the ideas of Exercise 1.3.9 later in the book, particularl
Chapter 6.

2

Torsion modules and ideal transforms

The first section of this chapter contains the essence of a useful reduction technique in the study of local cohomology modules of finitely generated modules. The main points are these: if M is a finitely generated R-module, then it turns out that the R-module $\overline{M} := M/\Gamma_{\mathfrak{a}}(M)$ is $\mathfrak{a}$-torsion-free, and that $\mathfrak{a}$ contains a non-zerodivisor r on $\overline{M}$; moreover, for $i > 0$, the local cohomology modules $H^i_{\mathfrak{a}}(M)$ and $H^i_{\mathfrak{a}}(\overline{M})$ are isomorphic, so that the study of these higher local cohomology modules of M with respect to $\mathfrak{a}$ can be reduced to the study of the corresponding local cohomology modules of $\overline{M}$; the advantage of this is that the exact sequence

$$0 \longrightarrow \overline{M} \xrightarrow{r} \overline{M} \longrightarrow \overline{M}/r\overline{M} \longrightarrow 0$$

provides a route to further progress. There are several places later in the book where this strategy is used.

In the second section of this chapter, we develop the basic theory of the functor $D_{\mathfrak{a}} := \varinjlim_{n \in \mathbb{N}} \operatorname{Hom}_R(\mathfrak{a}^n, \cdot)$ which was mentioned in 1.2.9(ii). For an R-module M, the module $D_{\mathfrak{a}}(M)$ is called the $\mathfrak{a}$-*transform of* M, and we plan to show that such transforms provide a powerful algebraic tool. The use of these ideal transforms is an important part of our approach to local cohomology; we show that they have a certain universal property, and that universal property will help us with many technical details later in the book.

Towards the end of the chapter, we show that, in certain cases, ideal transforms have geometrical significance: we describe the ring of regular functions on a non-empty open subset of an affine variety V over an algebraically closed field as an ideal transform of $\mathcal{O}(V)$, the ring of regular functions on V. Actually, this is only a brief foretaste of what is to come at the end of the book, in Chapter 20, where we explore the relationship between ideal transforms and sheaf cohomology.

2.1 Torsion modules

We begin with results concerning $\mathfrak{a}$-torsion-free modules and $\mathfrak{a}$-torsion modul
Part (i) of our first lemma is related to Exercise 1.3.9(iv).

2.1.1 Lemma. *Let M be an R-module.*

(i) *If $\mathfrak{a}$ contains a non-zerodivisor on M, then M is $\mathfrak{a}$-torsion-free, that* $\Gamma_{\mathfrak{a}}(M) = 0$.

(ii) *Assume now that M is finitely generated. Then M is $\mathfrak{a}$-torsion-free if a only if $\mathfrak{a}$ contains a non-zerodivisor on M.*

Proof. (i) Let $r \in \mathfrak{a}$ be a non-zerodivisor on M, and let $m \in \Gamma_{\mathfrak{a}}(M)$. Tl means that there exists $n \in \mathbb{N}$ with $\mathfrak{a}^n m = 0$. Thus $r^n m = 0$, from which deduce that $m = 0$.

(ii) One implication follows from (i), and so we assume that $\mathfrak{a}$ consi entirely of zerodivisors on M. Then $\mathfrak{a} \subseteq \bigcup_{\mathfrak{p} \in \mathrm{Ass}(M)} \mathfrak{p}$ by [60, Corollary 9.36], ar since M is finitely generated, $\mathrm{Ass}(M)$ is finite. Hence, by the Prime Avoidan Theorem [60, 3.61], $\mathfrak{a} \subseteq \mathfrak{p}$ for some $\mathfrak{p} \in \mathrm{Ass}(M)$. Since M has a submodu whose annihilator is exactly $\mathfrak{p}$, it follows that $(0 :_M \mathfrak{a}) \neq 0$, so that $\Gamma_{\mathfrak{a}}(M) \neq$ This completes the proof. □

2.1.2 Lemma. *For an R-module M, the module $M/\Gamma_{\mathfrak{a}}(M)$ is $\mathfrak{a}$-torsion-free.*

Proof. Let $m \in M$ be such that the element $m + \Gamma_{\mathfrak{a}}(M)$ of $M/\Gamma_{\mathfrak{a}}(M)$ annihilated by $\mathfrak{a}^n$, where $n \in \mathbb{N}$. Our aim is to show that $m + \Gamma_{\mathfrak{a}}(M) = 0$, th is, that $m \in \Gamma_{\mathfrak{a}}(M)$.

Now $\mathfrak{a}^n m \subseteq \Gamma_{\mathfrak{a}}(M)$. Since $\mathfrak{a}^n m$ is a finitely generated submodule of $\Gamma_{\mathfrak{a}}(M$ and each element of $\mathfrak{a}^n m$ is annihilated by some power of $\mathfrak{a}$, it follows that the exists $t \in \mathbb{N}$ such that $\mathfrak{a}^t \mathfrak{a}^n m = 0$. It follows that $m \in (0 :_M \mathfrak{a}^{n+t}) \subseteq \Gamma_{\mathfrak{a}}(M)$. □

2.1.3 Remarks. (i) If M is an $\mathfrak{a}$-torsion R-module, that is, if $M = \Gamma_{\mathfrak{a}}(M)$, the all submodules of M and all R-homomorphic images of M are also $\mathfrak{a}$-torsio

(ii) Consequently, for each R-module L and each $i \in \mathbb{N}_0$, the i-th loc cohomology module $H^i_{\mathfrak{a}}(L)$ is an $\mathfrak{a}$-torsion R-module. To see this, let

$$I^\bullet : 0 \longrightarrow I^0 \longrightarrow I^1 \longrightarrow \cdots \longrightarrow I^i \longrightarrow I^{i+1} \longrightarrow \cdots$$

be an injective resolution of L; use this in conjunction with 1.2.2(i) to see th $H^i_{\mathfrak{a}}(L)$ is a homomorphic image of a submodule of the $\mathfrak{a}$-torsion module $\Gamma_{\mathfrak{a}}(I^i$ and then appeal to (i).

Our next aim is to show that, if M is an $\mathfrak{a}$-torsion R-module, then $H^i_{\mathfrak{a}}(M) = 0$ for all $i \in \mathbb{N}$. We approach this by first considering the effect of $\Gamma_{\mathfrak{a}}$ on an injective R-module.

2.1.4 Proposition. *Let I be an injective R-module. Then $\Gamma_{\mathfrak{a}}(I)$ is also an injective R-module.*

Proof. Let $\mathfrak{b}$ be an ideal of R, and let $h : \mathfrak{b} \longrightarrow \Gamma_{\mathfrak{a}}(I)$ be an R-homomorphism. By [52, Theorem 3.20], it is enough for us to show that there exists $m \in \Gamma_{\mathfrak{a}}(I)$ such that $h(r) = rm$ for all $r \in \mathfrak{b}$.

Since I is injective, there exists $w \in I$ such that $h(r) = rw$ for all $r \in \mathfrak{b}$. Since R is Noetherian, $h(\mathfrak{b})$ is a finitely generated submodule of $\Gamma_{\mathfrak{a}}(I)$, and so there exists $t \in \mathbb{N}$ such that $\mathfrak{a}^t h(\mathfrak{b}) = 0$. Now $h(\mathfrak{b})$ is a submodule of the finitely generated R-module Rw, and so, by the Artin-Rees Lemma [35, Theorem 8.5], there exists $c \in \mathbb{N}$ such that, for all integers $n \geq c$,

$$\mathfrak{a}^n(Rw) \cap h(\mathfrak{b}) = \mathfrak{a}^{n-c}(\mathfrak{a}^c(Rw) \cap h(\mathfrak{b})).$$

Hence $\mathfrak{a}^{t+c}(Rw) \cap h(\mathfrak{b}) \subseteq \mathfrak{a}^t h(\mathfrak{b}) = 0$. Consequently, we can define an R-homomorphism $\tilde{h} : \mathfrak{a}^{t+c} + \mathfrak{b} \longrightarrow \Gamma_{\mathfrak{a}}(I)$ for which $\tilde{h}(s + r) = rw$ for all $s \in \mathfrak{a}^{t+c}$ and $r \in \mathfrak{b}$: this follows because, if $r_1, r_2 \in \mathfrak{b}$ are such that $r_1 - r_2 \in \mathfrak{a}^{t+c}$, then

$$r_1 w - r_2 w = (r_1 - r_2)w \in \mathfrak{a}^{t+c}(Rw) \cap h(\mathfrak{b}) = 0.$$

Now use again the fact that I is R-injective to see that there exists $m \in I$ such that $\tilde{h}(r) = rm$ for all $r \in \mathfrak{a}^{t+c} + \mathfrak{b}$. Since $\tilde{h}$ extends h, the proof will be complete if we show that $m \in \Gamma_{\mathfrak{a}}(I)$.

To achieve this, just note that, for all $s \in \mathfrak{a}^{t+c}$,

$$sm = \tilde{h}(s) = \tilde{h}(s + 0) = 0w = 0,$$

by definition of $\tilde{h}$. This completes the proof. □

2.1.5 Corollary. *Let I be an injective R-module. Then the canonical exact sequence $0 \longrightarrow \Gamma_{\mathfrak{a}}(I) \longrightarrow I \longrightarrow I/\Gamma_{\mathfrak{a}}(I) \longrightarrow 0$ splits.*

Proof. This is immediate from the fact, established in 2.1.4, that $\Gamma_{\mathfrak{a}}(I)$ is injective. □

2.1.6 Corollary. *Let M be an $\mathfrak{a}$-torsion R-module. Then there exists an injective resolution of M in which each term is an $\mathfrak{a}$-torsion R-module.*

Proof. First note that, if N is an arbitrary R-module, then there exist injective R-module I and an R-monomorphism $h : N \to I$. Application o left exact functor $\Gamma_{\mathfrak{a}}$ yields a monomorphism $\Gamma_{\mathfrak{a}}(h) : \Gamma_{\mathfrak{a}}(N) \to \Gamma_{\mathfrak{a}}(I)$, and I is injective by 2.1.4.

If we apply the above paragraph to the $\mathfrak{a}$-torsion R-module M, we see tha can be embedded in an $\mathfrak{a}$-torsion injective R-module I^0. Suppose, inducti that $n \in \mathbb{N}_0$ and we have constructed an exact sequence

$$0 \longrightarrow M \longrightarrow I^0 \longrightarrow \cdots \longrightarrow I^{n-1} \xrightarrow{d^{n-1}} I^n$$

of R-modules and R-homomorphisms in which $I^0, \ldots, I^{n-1}, I^n$ are all $\mathfrak{a}$-tor injective R-modules. Let $C := \operatorname{Coker} d^{n-1}$, and note that, by 2.1.3(i), C i $\mathfrak{a}$-torsion module because I^n is. Apply the first paragraph of this proc C to deduce that there is an $\mathfrak{a}$-torsion injective R-module I^{n+1} and a monomorphism $g : C \to I^{n+1}$. Let $d^n : I^n \to I^{n+1}$ be the composition o natural epimorphism from I^n to C and g.

This completes the inductive step, and the proof. □

2.1.7 Corollary.

(i) *Let M be an $\mathfrak{a}$-torsion R-module. Then $H^i_{\mathfrak{a}}(M) = 0$ for all $i > 0$.*

(ii) *For each R-module N, we have $H^i_{\mathfrak{a}}(\Gamma_{\mathfrak{a}}(N)) = 0$ for all $i > 0$.*

(iii) *For each R-module N, the natural epimorphism $\pi : N \to N/\Gamma_{\mathfrak{a}}(N)$ ind isomorphisms*

$$H^i_{\mathfrak{a}}(\pi) : H^i_{\mathfrak{a}}(N) \xrightarrow{\cong} H^i_{\mathfrak{a}}(N/\Gamma_{\mathfrak{a}}(N)) \qquad \textit{for all } i > 0.$$

Proof. (i) It was remarked in 1.2.2(i) that we can use any injective resolu of M to calculate (up to isomorphism) the $H^i_{\mathfrak{a}}(M)$: by 2.1.6, there is an injec resolution of M in which each term is an $\mathfrak{a}$-torsion R-module, and use of shows that $H^i_{\mathfrak{a}}(M) = 0$ for all $i > 0$.

(ii) This is immediate from (i) because $\Gamma_{\mathfrak{a}}(N)$ is an $\mathfrak{a}$-torsion R-module

(iii) This is immediate from (ii) on use of the long exact sequence of 1 cohomology modules induced by the short exact sequence

$$0 \longrightarrow \Gamma_{\mathfrak{a}}(N) \longrightarrow N \xrightarrow{\pi} N/\Gamma_{\mathfrak{a}}(N) \longrightarrow 0. \ \square$$

2.1.8 Exercise. Let M be an $\mathfrak{a}$-torsion R-module, and let

$$I^\bullet : 0 \xrightarrow{d^{-1}} I^0 \xrightarrow{d^0} I^1 \longrightarrow \cdots \longrightarrow I^i \xrightarrow{d^i} I^{i+1} \longrightarrow \cdots$$

be an injective resolution of M. Show that $\Gamma_{\mathfrak{a}}(I^{\bullet})$, that is, the complex

$$0 \xrightarrow{\Gamma_{\mathfrak{a}}(d^{-1})} \Gamma_{\mathfrak{a}}(I^0) \longrightarrow \cdots \longrightarrow \Gamma_{\mathfrak{a}}(I^i) \xrightarrow{\Gamma_{\mathfrak{a}}(d^i)} \Gamma_{\mathfrak{a}}(I^{i+1}) \longrightarrow \cdots,$$

is also an injective resolution of M.

2.1.9 ♯Exercise. Let $\mathfrak{b}$ be a second ideal of R, and let M be a $\mathfrak{b}$-torsion R-module. Prove that $H^i_{\mathfrak{a}+\mathfrak{b}}(M) \cong H^i_{\mathfrak{a}}(M)$ for all $i \in \mathbb{N}_0$.

In Chapter 1, we indicated that we shall, at times, find it convenient to consider an inverse family $\mathfrak{B} = (\mathfrak{b}_\alpha)_{\alpha\in\Lambda}$ of ideals of R over a (non-empty) directed partially ordered set Λ, as in 1.2.10. We were able to produce, for such a $\mathfrak{B}$, a functor $\Gamma_{\mathfrak{B}}$ in 1.2.11, and the right derived functors $\mathscr{R}^i\Gamma_{\mathfrak{B}}$ ($i \in \mathbb{N}_0$) of $\Gamma_{\mathfrak{B}}$ are generalizations of the local cohomology functors $H^i_{\mathfrak{a}}$ ($i \in \mathbb{N}_0$).

However, we cannot expect the theory of $\Gamma_{\mathfrak{B}}$ to imitate local cohomology theory completely unless we impose additional conditions on $\mathfrak{B}$. For example, the analogue for $\Gamma_{\mathfrak{B}}$ of 2.1.4 is not true in general. However, this difficulty does not occur for the concept introduced in the next definition.

2.1.10 Definition. Let $(\Lambda, \leq)$ be a (non-empty) directed partially ordered set. A *system of ideals (of R) over* Λ is an inverse family $\mathfrak{B} = (\mathfrak{b}_\alpha)_{\alpha\in\Lambda}$ of ideals of R over Λ in the sense of 1.2.10 with the additional property that, for all $\alpha, \gamma \in \Lambda$, there exists $\delta \in \Lambda$ such that $\mathfrak{b}_\delta \subseteq \mathfrak{b}_\alpha\mathfrak{b}_\gamma$. (It is clear that the δ in this condition can be chosen so that $\delta \geq \alpha$ and $\delta \geq \gamma$, since $(\Lambda, \leq)$ is a directed set and, by 1.2.10, whenever $(\mu, \nu) \in \Lambda \times \Lambda$ with $\mu \geq \nu$, we have $\mathfrak{b}_\mu \subseteq \mathfrak{b}_\nu$.)

For such a system of ideals $\mathfrak{B}$, we shall denote $\mathscr{R}^i\Gamma_{\mathfrak{B}}$ by $H^i_{\mathfrak{B}}$ (for all $i \in \mathbb{N}_0$).

2.1.11 Examples. (i) Let $\mathfrak{A}$ be a non-empty set of ideals of R. Then the set of all products of finite families of ideals taken from $\mathfrak{A}$ forms a system of ideals in an obvious way.

In particular, if $\mathfrak{A}$ is a non-empty multiplicatively closed set of ideals of R, then $\mathfrak{A}$ itself forms a system of ideals.

(ii) Let $n \in \mathbb{N}_0$. The height, $\operatorname{ht}\mathfrak{b}$, of a proper ideal $\mathfrak{b}$ of R is defined in [35, p. 31] and [60, 15.6]. Interpret the height of the improper ideal R of R as ∞. Then the set $\{\mathfrak{b} : \mathfrak{b} \text{ is an ideal of } R \text{ and } \operatorname{ht}\mathfrak{b} \geq n\}$ forms a system of ideals of R.

2.1.12 ♯Exercise. Let M be an R-module. Show that $\operatorname{Ass}(\Gamma_{\mathfrak{a}}(M))$ and $\operatorname{Ass}(M/\Gamma_{\mathfrak{a}}(M))$ are disjoint, and that

$$\operatorname{Ass} M = \operatorname{Ass}(\Gamma_{\mathfrak{a}}(M)) \cup \operatorname{Ass}(M/\Gamma_{\mathfrak{a}}(M)).$$

2.2 Ideal transforms

We now begin our study of the $\mathfrak{a}$-transform of an R-module M.

2.2.1 Definitions. In 1.2.9(ii), we constructed covariant, R-linear functors

$$D_{\mathfrak{a}} := \varinjlim_{n\in\mathbb{N}} \operatorname{Hom}_R(\mathfrak{a}^n, \bullet) \quad \text{and} \quad \varinjlim_{n\in\mathbb{N}} \operatorname{Ext}^i_R(\mathfrak{a}^n, \bullet) \ \ (i \in \mathbb{N}_0)$$

from $\mathscr{C}(R)$ to itself. We shall refer to $D_{\mathfrak{a}}$ as the *$\mathfrak{a}$-transform functor*; note tha by 1.2.8, this functor is left exact.

For an R-module M, we call $D_{\mathfrak{a}}(M) = \varinjlim_{n\in\mathbb{N}} \operatorname{Hom}_R(\mathfrak{a}^n, M)$ the *ideal transfor of M with respect to* $\mathfrak{a}$, or, alternatively, the *$\mathfrak{a}$-transform of M*.

2.2.2 ♯Exercise. For $i \in \mathbb{N}_0$, we use $\mathscr{R}^i D_{\mathfrak{a}}$ to denote the i-th right derived functo of $D_{\mathfrak{a}}$.

Modify the ideas of 1.3.7 to show that

$$\left(\varinjlim_{n\in\mathbb{N}} \operatorname{Ext}^i_R(\mathfrak{a}^n, \bullet)\right)_{i\in\mathbb{N}_0}$$

is a negative strongly connected sequence of functors from $\mathscr{C}(R)$ to itself. U 1.3.5 to show that there is a unique isomorphism of connected sequences (functors from $\mathscr{C}(R)$ to itself)

$$\Psi_{\mathfrak{a}} = \left(\psi^i_{\mathfrak{a}}\right)_{i\in\mathbb{N}_0} : \left(\mathscr{R}^i D_{\mathfrak{a}}\right)_{i\in\mathbb{N}_0} \xrightarrow{\cong} \left(\varinjlim_{n\in\mathbb{N}} \operatorname{Ext}^i_R(\mathfrak{a}^n, \bullet)\right)_{i\in\mathbb{N}_0}$$

which extends the identity natural equivalence from $D_{\mathfrak{a}}$ to itself.

2.2.3 ♯Exercise. Let M be an R-module. For each $n \in \mathbb{N}$, let $\pi^M_n : \operatorname{Hom}_R(\mathfrak{a}^n, M)$ $D_{\mathfrak{a}}(M)$ be the natural homomorphism.

(i) Let $n, m \in \mathbb{N}$, and let $f \in \operatorname{Hom}_R(\mathfrak{a}^n, R)$ and $g \in \operatorname{Hom}_R(\mathfrak{a}^m, R)$. Obser that $f\lceil_{\mathfrak{a}^{n+m}}$ maps $\mathfrak{a}^{n+m}$ into $\mathfrak{a}^m$. Show that $g \circ (f\lceil_{\mathfrak{a}^{n+m}}) = f \circ (g\lceil_{\mathfrak{a}^{n+m}})$.

(ii) Show that there is a binary operation $*$ on $D_{\mathfrak{a}}(R)$ which is such tha for $f \in \operatorname{Hom}_R(\mathfrak{a}^n, R)$ and $g \in \operatorname{Hom}_R(\mathfrak{a}^m, R)$,

$$\pi^R_n(f) * \pi^R_m(g) = \pi^R_{n+m}\left(g \circ (f\lceil_{\mathfrak{a}^{n+m}})\right);$$

show further that $D_{\mathfrak{a}}(R)$ is a commutative ring with identity with respect to i R-module addition and $*$ as multiplication.

(iii) Show that $D_{\mathfrak{a}}(M)$ has the structure of a $D_{\mathfrak{a}}(R)$-module such that, f $n, p \in \mathbb{N}$ and for $f \in \operatorname{Hom}_R(\mathfrak{a}^n, R)$ and $h \in \operatorname{Hom}_R(\mathfrak{a}^p, M)$,

$$\pi^R_n(f)\left(\pi^M_p(h)\right) = \pi^M_{n+p}\left(h \circ \left(f\lceil_{\mathfrak{a}^{n+p}}\right)\right).$$

(iv) Show that $D_{\mathfrak{a}}$ is an additive, left exact, covariant functor from $\mathscr{C}(R)$ to $\mathscr{C}(D_{\mathfrak{a}}(R))$. Thus all the $\mathscr{R}^i D_{\mathfrak{a}}$ ($i \in \mathbb{N}_0$) can be considered as additive functors from $\mathscr{C}(R)$ to $\mathscr{C}(D_{\mathfrak{a}}(R))$.

There are very important connections between the $\mathfrak{a}$-transform functor and the local cohomology functors, and we begin the study of these connections now. It will be seen that ideal transforms help in the development of local cohomology, and *vice versa*.

2.2.4 Theorem.

(i) *Denote the identity functor on the category* $\mathscr{C}(R)$ *by* Id.
There are natural transformations of functors (from $\mathscr{C}(R)$ *to itself)*

$$\xi\ (= \xi_{\mathfrak{a}}) : \Gamma_{\mathfrak{a}} \longrightarrow \mathrm{Id}, \qquad \eta\ (= \eta_{\mathfrak{a}}) : \mathrm{Id} \longrightarrow D_{\mathfrak{a}}, \qquad \zeta^0\ (= \zeta^0_{\mathfrak{a}}) : D_{\mathfrak{a}} \longrightarrow H^1_{\mathfrak{a}}$$

such that, for each R-module M,

(a) $\xi_M : \Gamma_{\mathfrak{a}}(M) \longrightarrow M$ *is the inclusion map,*

(b) *for each* $g \in M$, $\eta_M(g)$ *is the natural image in* $D_{\mathfrak{a}}(M)$ *of the homomorphism* $f_{n,g} \in \mathrm{Hom}_R(\mathfrak{a}^n, M)$ *given by* $f_{n,g}(r) = rg$ *for all* $r \in \mathfrak{a}^n$ *(for any* $n \in \mathbb{N}$*), and*

(c) *the sequence*

$$0 \longrightarrow \Gamma_{\mathfrak{a}}(M) \xrightarrow{\xi_M} M \xrightarrow{\eta_M} D_{\mathfrak{a}}(M) \xrightarrow{\zeta^0_M} H^1_{\mathfrak{a}}(M) \longrightarrow 0$$

is exact.

(ii) *Let* $i \in \mathbb{N}$, *and M be an R-module. For each* $n \in \mathbb{N}$, *the connecting homomorphism* $\beta^i_{n,M} : \mathrm{Ext}^i_R(\mathfrak{a}^n, M) \longrightarrow \mathrm{Ext}^{i+1}_R(R/\mathfrak{a}^n, M)$ *is an isomorphism, and passage to the direct limit yields an R-isomorphism*

$$\beta^i_M : \varinjlim_{n\in\mathbb{N}} \mathrm{Ext}^i_R(\mathfrak{a}^n, M) \xrightarrow{\cong} \varinjlim_{n\in\mathbb{N}} \mathrm{Ext}^{i+1}_R(R/\mathfrak{a}^n, M).$$

Define $\gamma^i_M : \mathscr{R}^i D_{\mathfrak{a}}(M) \xrightarrow{\cong} H^{i+1}_{\mathfrak{a}}(M)$ *by* $\gamma^i_M := \phi^{i+1}_{\mathfrak{a},M} \circ \beta^i_M \circ \psi^i_{\mathfrak{a},M}$, *where* $\phi^{i+1}_{\mathfrak{a}}$ *and* $\psi^i_{\mathfrak{a}}$ *are the natural equivalences of* 1.3.8 *and* 2.2.2 *respectively. Then, as M varies through the category* $\mathscr{C}(R)$, *the* γ^i_M *constitute a natural equivalence of functors*

$$\gamma^i : \mathscr{R}^i D_{\mathfrak{a}} \xrightarrow{\cong} H^{i+1}_{\mathfrak{a}}.$$

(iii) *For each* $i \in \mathbb{N}$, *set* $\zeta^i\ (= \zeta^i_{\mathfrak{a}}) := (-1)^i \gamma^i$. *Then*

$$\left(\zeta^j\right)_{j\in\mathbb{N}_0} : \left(\mathscr{R}^j D_{\mathfrak{a}}\right)_{j\in\mathbb{N}_0} \longrightarrow \left(H^{j+1}_{\mathfrak{a}}\right)_{j\in\mathbb{N}_0}$$

is the unique homomorphism of connected sequences which extends the natural transformation $\zeta^0 : D_{\mathfrak{a}} \longrightarrow H^1_{\mathfrak{a}}$ *of part* (i).

Proof. (i), (ii) Let $n, m \in \mathbb{N}$ with $n \geq m$; let $j_m^n : \mathfrak{a}^n \to \mathfrak{a}^m$ be the inclusic map; and let $h_m^n : R/\mathfrak{a}^n \to R/\mathfrak{a}^m$ be the natural epimorphism. Also, let M, N b R-modules and let $f : M \to N$ be an R-homomorphism.

The commutative diagram

$$\begin{tikzcd}
0 \arrow[r] & \mathfrak{a}^n \arrow[r] \arrow[d, "j_m^n"] & R \arrow[r] \arrow[d, equal] & R/\mathfrak{a}^n \arrow[r] \arrow[d, "h_m^n"] & 0 \\
0 \arrow[r] & \mathfrak{a}^m \arrow[r] & R \arrow[r] & R/\mathfrak{a}^m \arrow[r] & 0
\end{tikzcd}$$

(in which the rows are the canonical exact sequences) induces a chain ma of the long exact sequence of $\mathrm{Ext}_R^\bullet(\,\cdot\,, M)$ modules induced by the top row t that induced by the bottom row. Since R is a projective R-module, and sinc $\mathrm{Hom}_R(R, M)$ is naturally isomorphic to M, we therefore obtain a commutativ diagram

$$\begin{tikzcd}
0 \arrow[r] & \mathrm{Hom}_R(R/\mathfrak{a}^m, M) \arrow[r] \arrow[d] & M \arrow[r] \arrow[d, equal] & \mathrm{Hom}_R(\mathfrak{a}^m, M) \arrow[r] \arrow[d] & \mathrm{Ext}_R^1(R/\mathfrak{a}^m, M) \arrow[r] \arrow[d] & 0 \\
0 \arrow[r] & \mathrm{Hom}_R(R/\mathfrak{a}^n, M) \arrow[r] & M \arrow[r] & \mathrm{Hom}_R(\mathfrak{a}^n, M) \arrow[r] & \mathrm{Ext}_R^1(R/\mathfrak{a}^n, M) \arrow[r] & 0
\end{tikzcd}$$

(in which the rows are exact), and, for each $i \in \mathbb{N}$, a commutative diagram

$$\begin{tikzcd}
\mathrm{Ext}_R^i(\mathfrak{a}^m, M) \arrow[r, "\beta_{m,M}^i", "\cong"'] \arrow[d, "\mathrm{Ext}_R^i(j_m^n, M)"'] & \mathrm{Ext}_R^{i+1}(R/\mathfrak{a}^m, M) \arrow[d, "\mathrm{Ext}_R^{i+1}(h_m^n, M)"] \\
\mathrm{Ext}_R^i(\mathfrak{a}^n, M) \arrow[r, "\beta_{n,M}^i", "\cong"'] & \mathrm{Ext}_R^{i+1}(R/\mathfrak{a}^n, M) \;.
\end{tikzcd}$$

Now pass to the direct limits, bearing in mind the exactness-preserving proper ties of this process, and use the natural equivalences $\phi_{\mathfrak{a}}^0$, $\phi_{\mathfrak{a}}^1$ of 1.3.8 to obtai an exact sequence of R-modules and R-homomorphisms

$$0 \longrightarrow \Gamma_{\mathfrak{a}}(M) \xrightarrow{\xi_M} M \xrightarrow{\eta_M} D_{\mathfrak{a}}(M) \xrightarrow{\zeta_M^0} H_{\mathfrak{a}}^1(M) \longrightarrow 0$$

(where ξ_M and η_M are as described in (a) and (b) of the statement of th theorem) and, for each $i \in \mathbb{N}$, an isomorphism

$$\beta_M^i : \varinjlim_{n \in \mathbb{N}} \mathrm{Ext}_R^i(\mathfrak{a}^n, M) \xrightarrow{\cong} \varinjlim_{n \in \mathbb{N}} \mathrm{Ext}_R^{i+1}(R/\mathfrak{a}^n, M).$$

Moreover, since the diagram

$$\begin{tikzcd}
0 \arrow[r] & \mathrm{Hom}_R(R/\mathfrak{a}^n, M) \arrow[r] \arrow[d] & M \arrow[r] \arrow[d, "f"] & \mathrm{Hom}_R(\mathfrak{a}^n, M) \arrow[r] \arrow[d] & \mathrm{Ext}^1_R(R/\mathfrak{a}^n, M) \arrow[r] \arrow[d] & 0 \\
0 \arrow[r] & \mathrm{Hom}_R(R/\mathfrak{a}^n, N) \arrow[r] & N \arrow[r] & \mathrm{Hom}_R(\mathfrak{a}^n, N) \arrow[r] & \mathrm{Ext}^1_R(R/\mathfrak{a}^n, N) \arrow[r] & 0
\end{tikzcd}$$

and, for each $i \in \mathbb{N}$, the diagram

$$\begin{tikzcd}
\mathrm{Ext}^i_R(\mathfrak{a}^n, M) \arrow[r, "\beta^i_{n,M}", "\cong"'] \arrow[d] & \mathrm{Ext}^{i+1}_R(R/\mathfrak{a}^n, M) \arrow[d] \\
\mathrm{Ext}^i_R(\mathfrak{a}^n, N) \arrow[r, "\beta^i_{n,N}", "\cong"'] & \mathrm{Ext}^{i+1}_R(R/\mathfrak{a}^n, N)
\end{tikzcd}$$

(in all of which, all the unmarked vertical maps are induced by $f : M \to N$), are all commutative, it follows that, as M varies through $\mathscr{C}(R)$, the ξ_M, η_M, ζ^0_M and β^i_M constitute natural transformations of functors ξ, η, ζ^0 and β^i respectively. This completes the proof of parts (i) and (ii).

(iii) Of course $\left(\mathscr{R}^j D_{\mathfrak{a}}\right)_{j \in \mathbb{N}_0}$ is a negative strongly connected sequence of covariant functors from $\mathscr{C}(R)$ to itself; also, $\left(H^{j+1}_{\mathfrak{a}}\right)_{j \in \mathbb{N}_0}$ is a negative connected sequence of covariant functors from $\mathscr{C}(R)$ to itself. It is immediate from 1.3.4(i) that there is a unique homomorphism of the first of these connected sequences to the second which extends the natural transformation $\zeta^0 : D_{\mathfrak{a}} \longrightarrow H^1_{\mathfrak{a}}$ of part (i). The fact that this unique homomorphism is actually $\left((-1)^j \gamma^j\right)_{j \in \mathbb{N}_0}$ follows from Rotman [52, Theorem 11.24], which shows that, for each $j \in \mathbb{N}_0$, each $n \in \mathbb{N}$ and each exact sequence $0 \longrightarrow L \longrightarrow M \longrightarrow N \longrightarrow 0$ of R-modules and R-homomorphisms, the diagram

$$\begin{tikzcd}
\mathrm{Ext}^j_R(\mathfrak{a}^n, N) \arrow[r] \arrow[d] & \mathrm{Ext}^{j+1}_R(\mathfrak{a}^n, L) \arrow[d] \\
\mathrm{Ext}^{j+1}_R(R/\mathfrak{a}^n, N) \arrow[r] & \mathrm{Ext}^{j+2}_R(R/\mathfrak{a}^n, L),
\end{tikzcd}$$

in which all four homomorphisms are the obvious connecting homomorphisms, is anticommutative. □

2.2.5 Remark. Let the situation be as in 2.2.4. It is immediate from the exa sequence

$$0 \longrightarrow \Gamma_{\mathfrak{a}}(M) \xrightarrow{\xi_M} M \xrightarrow{\eta_M} D_{\mathfrak{a}}(M) \xrightarrow{\zeta_M^0} H_{\mathfrak{a}}^1(M) \longrightarrow 0$$

of 2.2.4(i)(c) that $\eta_M : M \longrightarrow D_{\mathfrak{a}}(M)$ is an isomorphism if and only if $\Gamma_{\mathfrak{a}}(M)$ $H_{\mathfrak{a}}^1(M) = 0$.

2.2.6 Corollary. *Let M be an R-module, not necessarily finitely generated. Assur that $\mathfrak{a}$ contains an M-sequence of length 2. Then*

$$\eta_M : M \longrightarrow D_{\mathfrak{a}}(M)$$

is an isomorphism.

Proof. By Exercise 1.3.9(iv), we have $\Gamma_{\mathfrak{a}}(M) = H_{\mathfrak{a}}^1(M) = 0$, and so the clai is immediate from 2.2.5. □

2.2.7 Remark. It follows from 2.2.4 that, for each R-module M, there is R-monomorphism $\theta_M : M/\Gamma_{\mathfrak{a}}(M) \longrightarrow D_{\mathfrak{a}}(M)$, induced by η_M, such that t sequence

$$0 \longrightarrow M/\Gamma_{\mathfrak{a}}(M) \xrightarrow{\theta_M} D_{\mathfrak{a}}(M) \xrightarrow{\zeta_M^0} H_{\mathfrak{a}}^1(M) \longrightarrow 0$$

is exact. As θ_M is induced by η_M, a precise formula for it can be extract from the statement of 2.2.4. Note also that, as M varies through $\mathscr{C}(R)$, the θ constitute a natural transformation of functors since, whenever $f : M \to N$ a homomorphism of R-modules, the diagram

$$\begin{tikzcd} M/\Gamma_{\mathfrak{a}}(M) \arrow[r, "\theta_M"] \arrow[d, "f^*"] & D_{\mathfrak{a}}(M) \arrow[d, "D_{\mathfrak{a}}(f)"] \\ N/\Gamma_{\mathfrak{a}}(N) \arrow[r, "\theta_N"] & D_{\mathfrak{a}}(N) \end{tikzcd}$$

(in which f^* denotes the homomorphism induced by f) commutes.

This remark can be particularly helpful when used in conjunction with t fact (see 2.1.7(iii)) that the canonical epimorphism $\pi : M \to M/\Gamma_{\mathfrak{a}}(M)$ indu isomorphisms $H_{\mathfrak{a}}^i(\pi) : H_{\mathfrak{a}}^i(M) \xrightarrow{\cong} H_{\mathfrak{a}}^i(M/\Gamma_{\mathfrak{a}}(M))$ for all $i > 0$. We use this i in the proof of 2.2.8 below.

The exact sequence $0 \longrightarrow \Gamma_{\mathfrak{a}}(M) \xrightarrow{\xi_M} M \xrightarrow{\eta_M} D_{\mathfrak{a}}(M) \xrightarrow{\zeta_M^0} H_{\mathfrak{a}}^1(M) \longrightarrow 0$ of Theorem 2.2.4(i)(c) is fundamental. In the next corollary, we present some important applications of it.

2.2.8 Corollary. *Let M be an R-module; we use the notation of* 2.2.4 *and* 2.2.7. *Let $\pi : M \longrightarrow M/\Gamma_{\mathfrak{a}}(M)$ be the canonical epimorphism. Then the following hold:*

(i) $D_{\mathfrak{a}}(\Gamma_{\mathfrak{a}}(M)) = 0$;
(ii) $D_{\mathfrak{a}}(\pi) : D_{\mathfrak{a}}(M) \longrightarrow D_{\mathfrak{a}}(M/\Gamma_{\mathfrak{a}}(M))$ *is an isomorphism;*
(iii) $D_{\mathfrak{a}}(\eta_M) = \eta_{D_{\mathfrak{a}}(M)} : D_{\mathfrak{a}}(M) \longrightarrow D_{\mathfrak{a}}(D_{\mathfrak{a}}(M))$ *is an isomorphism;*
(iv) $\Gamma_{\mathfrak{a}}(D_{\mathfrak{a}}(M)) = 0 = H_{\mathfrak{a}}^1(D_{\mathfrak{a}}(M))$;
(v) $H_{\mathfrak{a}}^i(\eta_M) : H_{\mathfrak{a}}^i(M) \longrightarrow H_{\mathfrak{a}}^i(D_{\mathfrak{a}}(M))$ *is an isomorphism for all* $i > 1$.

Proof. (i) Since $\Gamma_{\mathfrak{a}}(M)$ is an $\mathfrak{a}$-torsion R-module, it is enough, in order to prove this part, to show that if N is an $\mathfrak{a}$-torsion R-module, then $D_{\mathfrak{a}}(N) = 0$. Now, for such an N, we have $H_{\mathfrak{a}}^1(N) = 0$ by 2.1.7(i), and $\xi_N : \Gamma_{\mathfrak{a}}(N) \to N$ is the identity map. Hence the exact sequence of 2.2.4(i)(c) for N reduces to

$$0 \longrightarrow \Gamma_{\mathfrak{a}}(N) \xrightarrow{\cong} N \longrightarrow D_{\mathfrak{a}}(N) \longrightarrow 0,$$

and so $D_{\mathfrak{a}}(N) = 0$, as required.

(ii) By 2.2.1, the functor $D_{\mathfrak{a}}$ is left exact. Therefore the canonical exact sequence $0 \longrightarrow \Gamma_{\mathfrak{a}}(M) \longrightarrow M \xrightarrow{\pi} M/\Gamma_{\mathfrak{a}}(M) \longrightarrow 0$ induces an exact sequence

$$0 \longrightarrow D_{\mathfrak{a}}(\Gamma_{\mathfrak{a}}(M)) \longrightarrow D_{\mathfrak{a}}(M) \xrightarrow{D_{\mathfrak{a}}(\pi)} D_{\mathfrak{a}}(M/\Gamma_{\mathfrak{a}}(M)) \longrightarrow \mathscr{R}^1 D_{\mathfrak{a}}(\Gamma_{\mathfrak{a}}(M)).$$

Now $D_{\mathfrak{a}}(\Gamma_{\mathfrak{a}}(M)) = 0$ by (i), while $\mathscr{R}^1 D_{\mathfrak{a}}(\Gamma_{\mathfrak{a}}(M)) \cong H_{\mathfrak{a}}^2(\Gamma_{\mathfrak{a}}(M))$ by 2.2.4(ii). Since $H_{\mathfrak{a}}^2(\Gamma_{\mathfrak{a}}(M)) = 0$ by 2.1.7(ii), it follows that $D_{\mathfrak{a}}(\pi)$ is an isomorphism.

(iii) It is left as an interesting exercise on direct limits for the reader to show that $D_{\mathfrak{a}}(\eta_M) = \eta_{D_{\mathfrak{a}}(M)}$: he or she will need the definition of η provided in 2.2.4. We show that $D_{\mathfrak{a}}(\eta_M)$ is an isomorphism.

Since $\eta_M = \theta_M \circ \pi$ (where θ_M is as defined in 2.2.7) and we have already shown in (ii) that $D_{\mathfrak{a}}(\pi)$ is an isomorphism, it is enough for us to show that $D_{\mathfrak{a}}(\theta_M)$ is an isomorphism. Since $D_{\mathfrak{a}}$ is left exact (by 2.2.1), the exact sequence

$$0 \longrightarrow M/\Gamma_{\mathfrak{a}}(M) \xrightarrow{\theta_M} D_{\mathfrak{a}}(M) \xrightarrow{\zeta_M^0} H_{\mathfrak{a}}^1(M) \longrightarrow 0$$

of 2.2.7 yields a further exact sequence

$$0 \longrightarrow D_{\mathfrak{a}}(M/\Gamma_{\mathfrak{a}}(M)) \xrightarrow{D_{\mathfrak{a}}(\theta_M)} D_{\mathfrak{a}}(D_{\mathfrak{a}}(M)) \xrightarrow{D_{\mathfrak{a}}(\zeta_M^0)} D_{\mathfrak{a}}(H_{\mathfrak{a}}^1(M)).$$

But $H_{\mathfrak{a}}^1(M)$ is an $\mathfrak{a}$-torsion R-module, by 2.1.3(ii), and so $D_{\mathfrak{a}}(H_{\mathfrak{a}}^1(M)) = 0$ by (i). Hence $D_{\mathfrak{a}}(\theta_M)$ is an isomorphism, as required.

(iv) This is now immediate from (iii) and 2.2.5.

(v) We again use the fact that $\eta_M = \theta_M \circ \pi$. We already know, from 2.1.7(iii), that $H^i_{\mathfrak{a}}(\pi)$ is an isomorphism for all $i \in \mathbb{N}$. It is therefore enough, in order to complete the proof, to show that $H^i_{\mathfrak{a}}(\theta_M)$ is an isomorphism for all $i > 1$.

However, for each $i > 1$, the exact sequence

$$0 \longrightarrow M/\Gamma_{\mathfrak{a}}(M) \xrightarrow{\theta_M} D_{\mathfrak{a}}(M) \xrightarrow{\zeta^0_M} H^1_{\mathfrak{a}}(M) \longrightarrow 0$$

of 2.2.7 induces an exact sequence

$$\begin{array}{ccccc} & & \cdots & \longrightarrow & H^{i-1}_{\mathfrak{a}}(H^1_{\mathfrak{a}}(M)) \\ \longrightarrow & H^i_{\mathfrak{a}}(M/\Gamma_{\mathfrak{a}}(M)) & \xrightarrow{H^i_{\mathfrak{a}}(\theta_M)} & H^i_{\mathfrak{a}}(D_{\mathfrak{a}}(M)) & \xrightarrow{H^i_{\mathfrak{a}}(\zeta^0_M)} H^i_{\mathfrak{a}}(H^1_{\mathfrak{a}}(M)) \\ \longrightarrow & \cdots, & & & \end{array}$$

and since $H^1_{\mathfrak{a}}(M)$ is an $\mathfrak{a}$-torsion R-module (by 2.1.3(ii)), it follows from 2.1.7(i) that $H^{i-1}_{\mathfrak{a}}(H^1_{\mathfrak{a}}(M)) = H^i_{\mathfrak{a}}(H^1_{\mathfrak{a}}(M)) = 0$; hence $H^i_{\mathfrak{a}}(\theta_M)$ is an isomorphism, as required. □

2.2.9 ♯Exercise. Complete the proof of 2.2.8(iii). In other words, show that, in the notation of 2.2.8, $D_{\mathfrak{a}}(\eta_M) = \eta_{D_{\mathfrak{a}}(M)}$.

2.2.10 ♯Exercise. Recall that, by Exercise 2.2.3, the $\mathfrak{a}$-transform $D_{\mathfrak{a}}(R)$ of R has the structure of a commutative ring. Show that $\eta_R : R \longrightarrow D_{\mathfrak{a}}(R)$ is a ring homomorphism.

In order to make use of our results on the ideal transform $D_{\mathfrak{a}}(M)$ of an R-module M, we are going to obtain a description of $D_{\mathfrak{a}}(M)$ in terms of objects which are perhaps more familiar. Towards the end of the section, we shall obtain a particularly simple description in the case in which $\mathfrak{a}$ is principal. One approach to these results uses the fact that, for an R-module M, the homomorphism $\eta_M : M \longrightarrow D_{\mathfrak{a}}(M)$ can be viewed as the solution to a universal problem. Our next proposition, which uses ideas similar to ones used by K. Suominen in [64, §1], provides the key to this approach. The influence of the ideas of P. Gabriel [17] should also be acknowledged. A more general version of the proposition is published as [61, Lemma 1.3].

2.2.11 Proposition. *Let $e : M \longrightarrow M'$ be a homomorphism of R-modules such that* $\operatorname{Ker} e$ *and* $\operatorname{Coker} e$ *are both $\mathfrak{a}$-torsion. Let $\psi : M \longrightarrow K$ be a further homomorphism of R-modules.*

(i) *The map* $D_{\mathfrak{a}}(e) : D_{\mathfrak{a}}(M) \longrightarrow D_{\mathfrak{a}}(M')$ *is an isomorphism.*

(ii) *There is a unique R-homomorphism* $\psi' : M' \longrightarrow D_{\mathfrak{a}}(K)$ *such that the diagram*

$$\begin{tikzcd} M \arrow[r, "e"] \arrow[d, "\psi"'] & M' \arrow[d, "\psi'"] \\ K \arrow[r, "\eta_K"] & D_{\mathfrak{a}}(K) \end{tikzcd}$$

commutes. In fact, $\psi' = D_{\mathfrak{a}}(\psi) \circ D_{\mathfrak{a}}(e)^{-1} \circ \eta_{M'}$.

(iii) *If* ψ *and* $\eta_{M'} : M' \to D_{\mathfrak{a}}(M')$ *are both isomorphisms, then the homomorphism* ψ' *of part* (ii) *is also an isomorphism.*

Proof. (i) We shall use the exact sequences

$$0 \longrightarrow \operatorname{Ker} e \xrightarrow{\tau} M \xrightarrow{\lambda} \operatorname{Im} e \longrightarrow 0$$

and

$$0 \longrightarrow \operatorname{Im} e \xrightarrow{\rho} M' \xrightarrow{\sigma} \operatorname{Coker} e \longrightarrow 0,$$

in which the maps are the obvious homomorphisms. Now $e = \rho \circ \lambda$; it is therefore enough for us to show that $D_{\mathfrak{a}}(\rho)$ and $D_{\mathfrak{a}}(\lambda)$ are both isomorphisms.

The first of the above exact sequences induces an exact sequence

$$0 \longrightarrow D_{\mathfrak{a}}(\operatorname{Ker} e) \xrightarrow{D_{\mathfrak{a}}(\tau)} D_{\mathfrak{a}}(M) \xrightarrow{D_{\mathfrak{a}}(\lambda)} D_{\mathfrak{a}}(\operatorname{Im} e) \longrightarrow \mathscr{R}^1 D_{\mathfrak{a}}(\operatorname{Ker} e).$$

However, $\mathscr{R}^1 D_{\mathfrak{a}}(\operatorname{Ker} e) \cong H^2_{\mathfrak{a}}(\operatorname{Ker} e)$ by 2.2.4(ii). By hypothesis, $\operatorname{Ker} e$ is $\mathfrak{a}$-torsion. Hence $D_{\mathfrak{a}}(\operatorname{Ker} e) = H^2_{\mathfrak{a}}(\operatorname{Ker} e) = 0$, by 2.2.8(i) and 2.1.7(i). Therefore $D_{\mathfrak{a}}(\lambda)$ is an isomorphism.

Next, from the exact sequence $0 \longrightarrow \operatorname{Im} e \xrightarrow{\rho} M' \xrightarrow{\sigma} \operatorname{Coker} e \longrightarrow 0$ we obtain an induced exact sequence

$$0 \longrightarrow D_{\mathfrak{a}}(\operatorname{Im} e) \xrightarrow{D_{\mathfrak{a}}(\rho)} D_{\mathfrak{a}}(M') \xrightarrow{D_{\mathfrak{a}}(\sigma)} D_{\mathfrak{a}}(\operatorname{Coker} e).$$

However, by hypothesis, $\operatorname{Coker} e$ is $\mathfrak{a}$-torsion, and so $D_{\mathfrak{a}}(\operatorname{Coker} e) = 0$, by 2.2.8(i). Hence $D_{\mathfrak{a}}(\rho)$ is an isomorphism.

(ii) For this part of the proof, it will be convenient for us to write $K' := D_{\mathfrak{a}}(K)$ and $h := \eta_K : K \longrightarrow D_{\mathfrak{a}}(K) = K'$. Application of the natural transformation $\eta : \mathrm{Id} \longrightarrow D_{\mathfrak{a}}$ to the modules and homomorphisms in

the diagram

$$\begin{tikzcd} M \arrow[r, "e"] \arrow[d, "\psi"'] & M' \\ K \arrow[r, "h"] & K' \end{tikzcd}$$

yields a commutative diagram

$$\begin{tikzcd} M \arrow[r, "\eta_M"] \arrow[dr, "e"] \arrow[dd, "\psi"'] & D_{\mathfrak{a}}(M) \arrow[dr, "D_{\mathfrak{a}}(e)", "\cong"'] \arrow[dd, "D_{\mathfrak{a}}(\psi)"'] & \\ & M' \arrow[r, "\eta_{M'}"'] \arrow[d] & D_{\mathfrak{a}}(M') \\ K \arrow[r, "\eta_K"] \arrow[dr, "h"'] & D_{\mathfrak{a}}(K) \arrow[dr, "D_{\mathfrak{a}}(h)", "\cong"'] & \\ & K' \arrow[r, "\eta_{K'}", "\cong"'] & D_{\mathfrak{a}}(K'). \end{tikzcd}$$

It should be noted that $D_{\mathfrak{a}}(e)$ is an isomorphism, by part (i), that $D_{\mathfrak{a}}(K) = I$ and that, by 2.2.8(iii),

$$D_{\mathfrak{a}}(h) = D_{\mathfrak{a}}(\eta_K) = \eta_{D_{\mathfrak{a}}(K)} = \eta_{K'}$$

is also an isomorphism.

Thus, if there were an R-homomorphism $\psi' : M' \to K'$ such that $\psi' \circ e = h \circ$ then it would satisfy $D_{\mathfrak{a}}(\psi') \circ D_{\mathfrak{a}}(e) = D_{\mathfrak{a}}(h) \circ D_{\mathfrak{a}}(\psi)$ and we would have to ha (since $\eta : \mathrm{Id} \longrightarrow D_{\mathfrak{a}}$ is a natural transformation)

$$\begin{aligned} \psi' &= D_{\mathfrak{a}}(h)^{-1} \circ \eta_{K'} \circ \psi' = D_{\mathfrak{a}}(h)^{-1} \circ D_{\mathfrak{a}}(\psi') \circ \eta_{M'} \\ &= D_{\mathfrak{a}}(\psi) \circ D_{\mathfrak{a}}(e)^{-1} \circ \eta_{M'}. \end{aligned}$$

On the other hand, one can easily verify by means of an elementary diagr chase that $D_{\mathfrak{a}}(\psi) \circ D_{\mathfrak{a}}(e)^{-1} \circ \eta_{M'} \circ e = h \circ \psi$.

(iii) This is immediate from part (ii), since if ψ is an isomorphism, so to $D_{\mathfrak{a}}(\psi)$. □

2.2.12 Remark. Let $h : M \longrightarrow N$ be a homomorphism of R-modules. Re from 2.2.4(i) that $\eta_{\mathfrak{a}} : \mathrm{Id} \longrightarrow D_{\mathfrak{a}}$ is a natural transformation of functors therefore follows from 2.2.11 that $D_{\mathfrak{a}}(h) : D_{\mathfrak{a}}(M) \longrightarrow D_{\mathfrak{a}}(N)$ must be the uni

R-homomorphism from $D_{\mathfrak{a}}(M)$ to $D_{\mathfrak{a}}(N)$ which makes the diagram

$$\begin{tikzcd} M \arrow[r, "\eta_M"] \arrow[d, "h"'] & D_{\mathfrak{a}}(M) \arrow[d] \\ N \arrow[r, "\eta_N"] & D_{\mathfrak{a}}(N) \end{tikzcd}$$

commute.

2.2.13 Corollary. *Let $e : M \longrightarrow M'$ be a homomorphism of R-modules such that* $\operatorname{Ker} e$ *and* $\operatorname{Coker} e$ *are both $\mathfrak{a}$-torsion.*

(i) *The map $D_{\mathfrak{a}}(e) : D_{\mathfrak{a}}(M) \longrightarrow D_{\mathfrak{a}}(M')$ is an isomorphism.*

(ii) *There is a unique R-homomorphism $\psi' : M' \to D_{\mathfrak{a}}(M)$ such that the diagram*

$$\begin{tikzcd} M \arrow[r, "e"] \arrow[dr, "\eta_M"'] & M' \arrow[d, "\psi'"] \\ & D_{\mathfrak{a}}(M) \end{tikzcd}$$

commutes. In fact, $\psi' = D_{\mathfrak{a}}(e)^{-1} \circ \eta_{M'}$.

(iii) *The map ψ' of* (ii) *is an isomorphism if and only if $\eta_{M'}$ is an isomorphism, and, by* 2.2.4(i)(c), *this is the case if and only if $\Gamma_{\mathfrak{a}}(M') = H^1_{\mathfrak{a}}(M') = 0$.* □

We are now going to examine the special case of 2.2.13 in which $M = R$. Recall from 2.2.3 that $D_{\mathfrak{a}}(R)$ is a commutative ring, and from 2.2.10 that $\eta_R : R \longrightarrow D_{\mathfrak{a}}(R)$ is a ring homomorphism. We shall meet several examples of the situation of 2.2.13 in which $e : R \longrightarrow R'$ is a homomorphism of commutative rings such that, when R' is regarded as an R-module by means of e, both $\operatorname{Ker} e$ and $\operatorname{Coker} e$ are $\mathfrak{a}$-torsion: the next lemma shows that, in these circumstances, the R-homomorphism $\psi' : R' \longrightarrow D_{\mathfrak{a}}(R)$ given by 2.2.13 is actually a ring homomorphism too.

2.2.14 Lemma. *Let R' be a commutative ring, and let $e : R \longrightarrow R'$ be a ring homomorphism such that, when R' is regarded as an R-module by means of e, both* $\operatorname{Ker} e$ *and* $\operatorname{Coker} e$ *are $\mathfrak{a}$-torsion.*

Then the unique R-homomorphism $\psi' : R' \to D_{\mathfrak{a}}(R)$ such that the diagram

$$\begin{tikzcd} R \arrow[r, "e"] \arrow[dr, "\eta_R"'] & R' \arrow[d, "\psi'"] \\ & D_{\mathfrak{a}}(R) \end{tikzcd}$$

commutes (the existence of which follows from 2.2.13) is a ring homomorphism.

Proof. Recall from 2.2.10 that $\eta_R : R \longrightarrow D_{\mathfrak{a}}(R)$ is a ring homomorphism. Certainly $\psi'(1_{R'}) = \psi'(e(1_R)) = \eta_R(1_R) = 1_{D_{\mathfrak{a}}(R)}$.

Now let $r'_1, r'_2 \in R'$. Since $\operatorname{Coker} e$ is $\mathfrak{a}$-torsion, there exists $n \in \mathbb{N}$ such that $\mathfrak{a}^n$ annihilates the natural images in $\operatorname{Coker} e$ of both r'_1 and r'_2. Let $b_1, b_2 \in \mathfrak{a}^n$; then there exist $r_1, r_2 \in R$ such that $b_i r'_i = e(r_i)$ for $i = 1, 2$. Hence, in $D_{\mathfrak{a}}(R)$, we have

$$\begin{aligned} b_1 b_2 \psi'(r'_1)\psi'(r'_2) &= \psi'(b_1 r'_1)\psi'(b_2 r'_2) = \psi'(e(r_1))\psi'(e(r_2)) \\ &= \eta_R(r_1)\eta_R(r_2) = \eta_R(r_1 r_2) = \psi'(e(r_1 r_2)) \\ &= \psi'(e(r_1)e(r_2)) = \psi'(b_1 r'_1 b_2 r'_2) = b_1 b_2 \psi'(r'_1 r'_2), \end{aligned}$$

so that $b_1 b_2 \left(\psi'(r'_1)\psi'(r'_2) - \psi'(r'_1 r'_2)\right) = 0$. Hence the element

$$\psi'(r'_1)\psi'(r'_2) - \psi'(r'_1 r'_2) \in D_{\mathfrak{a}}(R)$$

is annihilated by $\mathfrak{a}^{2n}$, and since $D_{\mathfrak{a}}(R)$ is $\mathfrak{a}$-torsion-free by 2.2.8(iv), it follows that $\psi'(r'_1 r'_2) = \psi'(r'_1)\psi'(r'_2)$. □

2.2.15 Corollary. *Let M be an R-module, and let S be a multiplicatively closed subset of R which consists entirely of non-zerodivisors on M, and which is such that $S \cap \mathfrak{a} \neq \emptyset$.*

Then there is a unique R-isomorphism $\psi'_M : \bigcup_{n \in \mathbb{N}} (M :_{S^{-1}M} \mathfrak{a}^n) \longrightarrow D_{\mathfrak{a}}(M)$ for which the diagram

$$\begin{tikzcd} M \arrow[r, "\subseteq"] \arrow[dr, "\eta_M"'] & \bigcup_{n \in \mathbb{N}} (M :_{S^{-1}M} \mathfrak{a}^n) \arrow[d, "\psi'_M"] \\ & D_{\mathfrak{a}}(M) \end{tikzcd}$$

commutes. In the special case in which $M = R$ (and S consists of non-zerodivisors on R), the map ψ'_R is actually a ring isomorphism.

Note. Of course, since S consists entirely of non-zerodivisors on M, the canonical R-homomorphism $M \to S^{-1}M$ is injective; we are using this to identify M as an R-submodule of $S^{-1}M$.

Proof. Set $M' := \bigcup_{n\in\mathbb{N}}(M :_{S^{-1}M} \mathfrak{a}^n)$, and let $e : M \longrightarrow M'$ denote the inclusion homomorphism. Since $\operatorname{Coker} e = \Gamma_{\mathfrak{a}}(S^{-1}M/M)$ is $\mathfrak{a}$-torsion, it is immediate from 2.2.13 that there is a unique R-homomorphism $\psi'_M : M' \longrightarrow D_{\mathfrak{a}}(M)$ which makes the above diagram commute; it also follows that, in order to show that ψ'_M is an isomorphism, it is sufficient for us to show that $\Gamma_{\mathfrak{a}}(M') = H^1_{\mathfrak{a}}(M') = 0$. This we do.

Let $s \in S \cap \mathfrak{a}$. Since the functors $H^i_{\mathfrak{a}}$ $(i \in \mathbb{N}_0)$ are all R-linear, multiplication by s on an $H^i_{\mathfrak{a}}(S^{-1}M)$ must provide an automorphism; since each element of $H^i_{\mathfrak{a}}(S^{-1}M)$ is annihilated by a power of s, it follows that $H^i_{\mathfrak{a}}(S^{-1}M) = 0$ for all $i \in \mathbb{N}_0$. Hence $\Gamma_{\mathfrak{a}}(M') = 0$. It now follows from the exact sequence

$$0 \longrightarrow M' \longrightarrow S^{-1}M \longrightarrow S^{-1}M/M' \longrightarrow 0$$

that $H^1_{\mathfrak{a}}(M') \cong \Gamma_{\mathfrak{a}}(S^{-1}M/M')$. However,

$$S^{-1}M/M' \cong (S^{-1}M/M)/(M'/M) = (S^{-1}M/M)/\Gamma_{\mathfrak{a}}(S^{-1}M/M),$$

and this is $\mathfrak{a}$-torsion-free by 2.1.2. Hence $H^1_{\mathfrak{a}}(M') = 0$. The final claim follows from 2.2.14. □

In the case when $\mathfrak{a}$ is principal, there is a result similar to 2.2.15, but under weaker hypotheses, which has important consequences for our work in Chapter 3. We present this result next. Recall that, for an R-module M and $a \in R$, the notation M_a denotes the module of fractions of M with respect to the multiplicatively closed subset $\{a^i : i \in \mathbb{N}_0\}$.

2.2.16 Theorem. *Let $a \in R$. There is a natural equivalence of functors*

$$\omega' : D_{Ra} = \varinjlim_{n\in\mathbb{N}} \operatorname{Hom}_R(Ra^n, \,\cdot\,) \longrightarrow (\,\cdot\,)_a$$

(from $\mathscr{C}(R)$ to $\mathscr{C}(R)$) which is such that, for an R-module M, and $f \in D_{Ra}(M)$ represented by $f_t \in \operatorname{Hom}_R(Ra^t, M)$ (for some $t \in \mathbb{N}$), we have $\omega'_M(f) = f_t(a^t)/a^t$.

Proof. Let M be an R-module. It is immediate from 2.2.13 that there is a unique R-isomorphism $\nu_M : M_a \longrightarrow D_{Ra}(M)$ such that the diagram

$$\begin{tikzcd} M \arrow[r] \arrow[dr, "\eta_{Ra,M}"'] & M_a \arrow[d, "\nu_M", "\cong"'] \\ & D_{Ra}(M) \end{tikzcd}$$

(in which the horizontal homomorphism is the natural one) commutes: note that $H^i_{Ra}(M_a) = 0$ for all $i \in \mathbb{N}_0$ because multiplication by a provides an automorphism on all these local cohomology modules. Define $\omega'_M := \nu_M^{-1}$. It is straightforward to use the commutativity of the above diagram to show that ω'_M satisfies the formula given in the statement of the theorem. Furthermore, it is easy to use that formula to show that, as M varies through the category $\mathscr{C}(R)$, the ω'_M constitute a natural equivalence of functors. □

2.2.17 Remark. With the notation of 2.2.16, consider, for an R-module M, the fundamental exact sequence of 2.2.4(i)(c) in the particular case in which $\mathfrak{a} = Ra$: we have

$$0 \longrightarrow \Gamma_{Ra}(M) \xrightarrow{\xi_M} M \xrightarrow{\eta_M} D_{Ra}(M) \xrightarrow{\zeta^0_M} H^1_{Ra}(M) \longrightarrow 0.$$

Note that $\omega'_M \circ \eta_M : M \longrightarrow M_a$ is just the canonical R-homomorphism τ_M. Set $\sigma_M := \zeta^0_M \circ (\omega'_M)^{-1}$; then there is an exact sequence of R-modules and R-homomorphisms

$$0 \longrightarrow \Gamma_{Ra}(M) \xrightarrow{\xi_M} M \xrightarrow{\tau_M} M_a \xrightarrow{\sigma_M} H^1_{Ra}(M) \longrightarrow 0$$

such that, as M varies through $\mathscr{C}(R)$, the τ_M and σ_M constitute natural transformations of functors

$$\tau : \mathrm{Id} \longrightarrow (\,\cdot\,)_a, \qquad \sigma : (\,\cdot\,)_a \longrightarrow H^1_{Ra}.$$

2.2.18 Corollary. *Let M be an R-module and let $a \in R$.*

(i) *The kernel of the natural homomorphism $\tau_M : M \to M_a$ is precisely $\Gamma_{Ra}(M)$, and so, in view of 2.2.17, $M/\Gamma_{Ra}(M)$ can be identified as a submodule of M_a. With this identification,*

$$H^1_{Ra}(M) \cong M_a/(M/\Gamma_{Ra}(M)).$$

(ii) *For all $i \in \mathbb{N}$ with $i > 1$, we have $H^i_{Ra}(M) = 0$.*

Proof. (i) This is immediate from 2.2.17.

(ii) Let $i \in \mathbb{N}$ with $i > 1$. Now $H^i_{Ra}(M) \cong \mathscr{R}^{i-1}D_{Ra}(M)$ by 2.2.4(ii). However, by 2.2.16, the functor D_{Ra} is naturally equivalent to $(\,\cdot\,)_a$; as the latter functor is exact and $i - 1 > 0$, it follows that $\mathscr{R}^{i-1}D_{Ra}(N) = 0$ for all R-modules N. Hence $H^i_{Ra}(M) = 0$. □

The above corollary will prove useful in Chapter 3, as it provides a basis for an argument which uses induction on the number of generators of $\mathfrak{a}$, and which relies on the Mayer-Vietoris Sequence for local cohomology for the inductive argument. This Mayer-Vietoris Sequence forms a major part of the subject matter of Chapter 3.

2.2.19 Exercise. Use 2.2.15 to provide an alternative proof of Corollary 2.2.6.

More precisely, let M be an R-module, not necessarily finitely generated, and assume that $\mathfrak{a}$ contains an M-sequence (x, y) of length 2. Use 2.2.15 (with the choice $S := \{x^i : i \in \mathbb{N}_0\}$) and 1.3.9(ii) to show that the map $\eta_M : M \longrightarrow D_{\mathfrak{a}}(M)$ of 2.2.4(i) is an isomorphism.

2.2.20 ♯Exercise. Let $\mathfrak{b}$ be a second ideal of R.

(i) Suppose that $\mathfrak{a} \subseteq \sqrt{\mathfrak{b}}$. Show that there is a unique natural transformation of functors (from $\mathscr{C}(R)$ to itself) $\alpha_{\mathfrak{b},\mathfrak{a}} : D_{\mathfrak{b}} \longrightarrow D_{\mathfrak{a}}$ such that, for each R-module M, the diagram

$$\begin{tikzcd} M \arrow[r, "\eta_{\mathfrak{b},M}"] \arrow[dr, "\eta_{\mathfrak{a},M}"'] & D_{\mathfrak{b}}(M) \arrow[d, "\alpha_{\mathfrak{b},\mathfrak{a},M}"] \\ & D_{\mathfrak{a}}(M) \end{tikzcd}$$

commutes.

(ii) Deduce that, if $\sqrt{\mathfrak{a}} = \sqrt{\mathfrak{b}}$, then $D_{\mathfrak{a}}$ and $D_{\mathfrak{b}}$ are naturally equivalent.

It will be convenient, in our discussion of geometric examples in the next section, for us to have available a result which shows that, in a certain sense, the ideal transform is 'independent of the base ring'. To be more precise, consider a second commutative Noetherian ring R' and a ring homomorphism $f : R \longrightarrow R'$; let M' be an R'-module. At times when we wish to be absolutely precise, we shall use $M'\lceil_R$ to indicate that we are regarding M' as an R-module by means of f. Note that $\lceil_R$ can be regarded as a functor from $\mathscr{C}(R')$ to $\mathscr{C}(R)$. We can form the ideal transform $D_{\mathfrak{a}R'}(M')$ of M' with respect to the extension $\mathfrak{a}R'$ of $\mathfrak{a}$ to R' via f, and then regard this as an R-module by means of f:

this is, then, the R-module $D_{\mathfrak{a}R'}(M')\lceil_R$. Alternatively, we can regard M' as th R-module $M'\lceil_R$, and form $D_{\mathfrak{a}}(M'\lceil_R)$. Our next result will show, among othe things, that there is an R-isomorphism

$$D_{\mathfrak{a}R'}(M') = D_{\mathfrak{a}R'}(M')\lceil_R \xrightarrow{\cong} D_{\mathfrak{a}}(M'\lceil_R) =: D_{\mathfrak{a}}(M'),$$

so that, speaking loosely, it doesn't matter whether we calculate these idea transforms over R or R'. The advantage of this in practice is that there sometimes an obvious choice of an 'R' over which the calculations are easy.

2.2.21 Theorem. *Let R' be a second commutative Noetherian ring and let $f : R$ - R' be a ring homomorphism. We use the notation introduced above.*

There is a natural equivalence of functors

$$\varepsilon : D_{\mathfrak{a}R'}(\,\cdot\,)\lceil_R \longrightarrow D_{\mathfrak{a}}(\,\cdot\,\lceil_R)$$

(from $\mathscr{C}(R')$ to $\mathscr{C}(R)$) which is such that, for each R'-module M', the diagram

$$\begin{tikzcd} M' \arrow[r, "\eta_{\mathfrak{a}R',M'}"] \arrow[d, equal] & D_{\mathfrak{a}R'}(M') \arrow[d, "\varepsilon_{M'}"] \\ M' \arrow[r, "\eta_{\mathfrak{a},M'}"] & D_{\mathfrak{a}}(M') \end{tikzcd}$$

commutes.

Proof. Let M' be an R'-module. By 2.2.4(i)(c), the R'-homomorphism $\eta_{\mathfrak{a}R',M}$ $M' \longrightarrow D_{\mathfrak{a}R'}(M')$ has kernel and cokernel which are, respectively, isomorphic $\Gamma_{\mathfrak{a}R'}(M')$ and $H^1_{\mathfrak{a}R'}(M')$. Hence $\eta_{\mathfrak{a}R',M'}\lceil_R$ has kernel and cokernel which are torsion. It therefore follows from 2.2.13 that there is a unique R-homomorphis $\varepsilon_{M'} : D_{\mathfrak{a}R'}(M') \longrightarrow D_{\mathfrak{a}}(M')$ such that the diagram

$$\begin{tikzcd} M' \arrow[r, "\eta_{\mathfrak{a}R',M'}"] \arrow[d, equal] & D_{\mathfrak{a}R'}(M') \arrow[d, "\varepsilon_{M'}"] \\ M' \arrow[r, "\eta_{\mathfrak{a},M'}"] & D_{\mathfrak{a}}(M') \end{tikzcd}$$

commutes. In fact, it is easy to use the uniqueness aspect of Proposition 2.2 to show that, as M' varies through the category $\mathscr{C}(R')$, the $\varepsilon_{M'}$ constitut natural transformation of functors, and so it remains only to show that e $\varepsilon_{M'}$ is an isomorphism.

The fact that M' is an (R, R')-bimodule means that $D_{\mathfrak{a}}(M')$ inherits a natural structure as R'-module (such that $D_{\mathfrak{a}}(r' \operatorname{Id}_{M'})$, for $r' \in R'$, provides multiplication by r'). Furthermore, since ε is a natural transformation of functors, we have

$$D_{\mathfrak{a}}(r' \operatorname{Id}_{M'}) \circ \varepsilon_{M'} = \varepsilon_{M'} \circ D_{\mathfrak{a}R'}(r' \operatorname{Id}_{M'}) = \varepsilon_{M'} \circ (r' \operatorname{Id}_{D_{\mathfrak{a}R'}(M')})$$

for all $r' \in R'$, so that $\varepsilon_{M'}$ is an R'-homomorphism. Likewise, $\eta_{\mathfrak{a},M'}$ becomes an R'-homomorphism.

Another use of 2.2.4(i)(c) shows that $\eta_{\mathfrak{a},M'} : M' \longrightarrow D_{\mathfrak{a}}(M')$ has kernel and cokernel which are $\mathfrak{a}$-torsion, so that, when we consider $\eta_{\mathfrak{a},M'}$ as an R'-homomorphism, its kernel and cokernel are $\mathfrak{a}R'$-torsion. It therefore follows from 2.2.13 that there is a unique R'-homomorphism $\lambda_{M'} : D_{\mathfrak{a}}(M') \longrightarrow D_{\mathfrak{a}R'}(M')$ such that the diagram

$$\begin{tikzcd}
M' \arrow[r, "\eta_{\mathfrak{a},M'}"] \arrow[d, equal] & D_{\mathfrak{a}}(M') \arrow[d, "\lambda_{M'}"] \\
M' \arrow[r, "\eta_{\mathfrak{a}R',M'}"] & D_{\mathfrak{a}R'}(M')
\end{tikzcd}$$

commutes. The uniqueness aspect of 2.2.13, together with the facts that $\varepsilon_{M'}$ and $\lambda_{M'}$ are both R- and R'-homomorphisms, now yields that

$$\lambda_{M'} \circ \varepsilon_{M'} = \operatorname{Id}_{D_{\mathfrak{a}R'}(M')} \qquad \text{and} \qquad \varepsilon_{M'} \circ \lambda_{M'} = \operatorname{Id}_{D_{\mathfrak{a}}(M')},$$

so that $\varepsilon_{M'}$ is an isomorphism. □

2.2.22 ♯Exercise. Let the situation be as in 2.2.21, and consider the natural equivalence ε of that theorem. Show that $\varepsilon_{R'}^{-1} \circ D_{\mathfrak{a}}(f) : D_{\mathfrak{a}}(R) \longrightarrow D_{\mathfrak{a}R'}(R')$ is the unique ring homomorphism which makes the diagram

$$\begin{tikzcd}
R \arrow[r, "\eta_{\mathfrak{a},R}"] \arrow[d, "f"'] & D_{\mathfrak{a}}(R) \arrow[d] \\
R' \arrow[r, "\eta_{\mathfrak{a}R',R'}"] & D_{\mathfrak{a}R'}(R')
\end{tikzcd}$$

commute. (You might find it helpful to adapt the argument used in the proof of 2.2.14.)

2.2.23 Exercise. Let the situation be as in 2.2.21. Show that there is a natural equivalence of functors

$$H^1_{\mathfrak{a}R'}(\cdot)\lceil_R \longrightarrow H^1_{\mathfrak{a}}(\cdot\lceil_R)$$

(from $\mathscr{C}(R')$ to $\mathscr{C}(R)$).

The result of Exercise 2.2.23 is a particular case of a more general (and very important) result concerning 'independence of the base ring' which will be established in Chapter 4.

2.3 Geometrical significance

We are now going to show that the ideal transform $D_{\mathfrak{a}}(R)$ has an important geometrical significance in the case when R is the ring of regular functions on an (irreducible) affine algebraic variety over an algebraically closed field. Several examples in this book will be concerned with affine algebraic geometry over the field of complex numbers $\mathbb{C}$, and it is convenient for us to introduce some notation which will be consistently used in connection with such examples.

2.3.1 Notation. Let K be an algebraically closed field. For $n \in \mathbb{N}$, we shall use $\mathbb{A}^n(K)$ to denote affine n-space over K, that is, K^n endowed with the Zariski topology; we shall use $\mathbb{A}^n$ to denote complex affine n-space $\mathbb{A}^n(\mathbb{C})$. All unexplained mentions of topological notions, including 'open' and 'closed' subsets, in connection with affine spaces will refer to the Zariski topology.

By an *affine variety* over K we shall mean an irreducible closed subset of $\mathbb{A}^n(K)$ (with the induced topology), and by a *quasi-affine variety* over K we shall mean a non-empty open subset of an affine variety over K (again with the induced topology).

For a quasi-affine variety U over K, we shall use $\mathcal{O}(U)$ to denote the ring of regular functions on U and $K(U)$ to denote the function field of U. Thus, when U is affine, $\mathcal{O}(U)$ is just the coordinate ring of U; this is actually an integral domain (since U is irreducible), and its field of fractions is just $K(U)$.

We shall regard the polynomial ring $K[X_1,\ldots,X_n]$ as the coordinate ring $\mathcal{O}(\mathbb{A}^n(K))$ of $\mathbb{A}^n(K)$ in the obvious way (although we shall tend to use X, Y instead of X_1, X_2 in the case when $n = 2$).

For $f_1,\ldots,f_t \in K[X_1,\ldots,X_n]$, we shall use $V_{\mathbb{A}^n(K)}(f_1,\ldots,f_t)$ to denote the affine algebraic set

$$\{p \in \mathbb{A}^n(K) : f_1(p) = \ldots = f_t(p) = 0\}$$

corresponding to the ideal $(f_1, \ldots, f_t)$ of $K[X_1, \ldots, X_n]$. If V denotes this affine algebraic set, then, for $1 \leq i \leq n$, the restriction of the coordinate function X_i of $\mathbb{A}^n(K)$ to V will be denoted by $X_i\lceil_V$ or x_i.

For a quasi-affine variety W over K and a function $f \in \mathcal{O}(W)$, we shall use $U_W(f)$ to denote the open subset $\{p \in W : f(p) \neq 0\}$ of W.

We are now going to show that the ring of regular functions on a quasi-affine variety can be expressed in terms of an ideal transform. Before doing so, we remind the reader of the following point. For a non-empty open subset U of an affine variety V over the algebraically closed field K, the ring $\mathcal{O}(U)$ can be identified in a natural way as a subring of $K(V)$, and, when this identification is made, the restriction homomorphism

$$\lceil_U : \mathcal{O}(V) \longrightarrow \mathcal{O}(U)$$

is just the inclusion map.

2.3.2 Theorem. *Let V be an affine variety over the algebraically closed field K. Let $\mathfrak{b}$ be a non-zero ideal of $\mathcal{O}(V)$, let $V(\mathfrak{b})$ denote the closed subset of V determined by $\mathfrak{b}$, and let U be the open subset $V \setminus V(\mathfrak{b})$ of V.*

There is a unique $\mathcal{O}(V)$-isomorphism $\nu_{V,\mathfrak{b}} : \mathcal{O}(U) \xrightarrow{\cong} D_{\mathfrak{b}}(\mathcal{O}(V))$ for which the diagram

$$\begin{tikzcd}
\mathcal{O}(V) \arrow[r, "\lceil_U"] \arrow[dr, "\eta_{\mathcal{O}(V)}"'] & \mathcal{O}(U) \arrow[d, "\nu_{V,\mathfrak{b}}", "\cong"'] \\
& D_{\mathfrak{b}}(\mathcal{O}(V))
\end{tikzcd}$$

commutes. Furthermore, $\nu_{V,\mathfrak{b}}$ is a ring isomorphism.

Proof. In view of 2.2.15, it is enough for us to show that the submodules $\mathcal{O}(U)$ and $\bigcup_{n\in\mathbb{N}}(\mathcal{O}(V) :_{K(V)} \mathfrak{b}^n)$ of $K(V)$ are equal.

Since the ring $\mathcal{O}(V)$ is Noetherian, $\mathfrak{b}$ is finitely generated, by $h_1, \ldots, h_t$, say. We can, and do, assume that $h_1, \ldots, h_t$ are all non-zero. Note that $U = \bigcup_{i=1}^{t} U_V(h_i)$, and that $\mathcal{O}(U_V(h_i)) = \mathcal{O}(V)_{h_i}$ when these two rings are identified with subrings of $K(V)$ in the natural ways.

Let $f \in \mathcal{O}(U)$. Choose $i \in \mathbb{N}$ with $1 \leq i \leq t$. Since $f\lceil_{U_V(h_i)} \in \mathcal{O}(U_V(h_i)) = \mathcal{O}(V)_{h_i}$, it follows that there exists $n_i \in \mathbb{N}$ such that $h_i^{n_i} f \in \mathcal{O}(V)$. We deduce that there exists $n \in \mathbb{N}$ such that $\mathfrak{b}^n f \in \mathcal{O}(V)$. Hence

$$\mathcal{O}(U) \subseteq \bigcup_{n\in\mathbb{N}} (\mathcal{O}(V) :_{K(V)} \mathfrak{b}^n).$$

Now let $f \in \bigcup_{n\in\mathbb{N}}(\mathcal{O}(V) :_{K(V)} \mathfrak{b}^n)$. Thus there exists $n \in \mathbb{N}$ such that $g_i := h_i^n f \in \mathcal{O}(V)$ for all $i = 1, \ldots, t$. Let $p \in U$, and let $\mathfrak{m}(p)$ be the maximal ideal of $\mathcal{O}(V)$ corresponding to p. Now $p \in U_V(h_i)$ for some i with $1 \leq i \leq t$, and since $h_i(p) \neq 0$, we have $h_i \in \mathcal{O}(V) \setminus \mathfrak{m}(p)$ and

$$f = \frac{g_i}{h_i^n} \in \mathcal{O}(V)_{\mathfrak{m}(p)} = \mathcal{O}_{V,p},$$

the local ring of V at p. It follows that $f \in \bigcap_{p\in U} \mathcal{O}_{V,p} = \mathcal{O}(U)$. Hence

$$\mathcal{O}(U) \supseteq \bigcup_{n\in\mathbb{N}}(\mathcal{O}(V) :_{K(V)} \mathfrak{b}^n),$$

and the proof of the first claim is complete. The final claim follows from Lemma 2.2.14. □

2.3.3 Remark. It follows from 2.3.2 that, in the notation of that proposition, the map $\eta_{\mathcal{O}(V)} : \mathcal{O}(V) \longrightarrow D_{\mathfrak{b}}(\mathcal{O}(V))$ is an epimorphism if and only if the restriction map $\restriction_U : \mathcal{O}(V) \longrightarrow \mathcal{O}(U)$ is surjective, that is, if and only if every regular function on U can be extended to a regular function on V. However, by 2.2.4(i)(c), $\eta_{\mathcal{O}(V)}$ fails to be an epimorphism if and only if $H^1_{\mathfrak{b}}(\mathcal{O}(V)) \neq 0$. Thus we can, in a sense, regard non-zero elements of the local cohomology module $H^1_{\mathfrak{b}}(\mathcal{O}(V))$ as obstructions to the extension of regular functions on U to regular functions on V. We shall exploit this observation later in the chapter in our discussion of the geometric significance of ideal transforms and local cohomology modules in particular examples.

The next exercise establishes a certain 'naturality' property of the isomorphisms given by Theorem 2.3.2.

2.3.4 ♯Exercise. Let $\beta : W \longrightarrow V$ be a morphism of affine varieties over the algebraically closed field K. Let $\mathfrak{b}$ be a non-zero ideal of $\mathcal{O}(V)$, and assume that the extension $\mathfrak{b}\mathcal{O}(W)$ of $\mathfrak{b}$ under the induced K-algebra homomorphism $\beta^* : \mathcal{O}(V) \longrightarrow \mathcal{O}(W)$ is also non-zero.

We use the notation of Theorem 2.3.2. Since $\beta^{-1}(V(\mathfrak{b})) = V(\mathfrak{b}\mathcal{O}(W))$, the restriction of β provides a morphism $\beta\restriction : W \setminus V(\mathfrak{b}\mathcal{O}(W)) \longrightarrow V \setminus V(\mathfrak{b})$ of quasi-affine varieties.

Use Exercise 2.2.22 to show that, with the notation of that exercise, the diagram

$$\begin{tikzcd}
\mathcal{O}(V \setminus V(\mathfrak{b})) \arrow[r, "\beta\restriction^*"] \arrow[d, "\nu_{V,\mathfrak{b}}"', "\cong"] & \mathcal{O}(W \setminus V(\mathfrak{b}\mathcal{O}(W))) \arrow[d, "\cong"', "\nu_{W,\mathfrak{b}\mathcal{O}(W)}"] \\
D_{\mathfrak{b}}(\mathcal{O}(V)) \arrow[r, "\varepsilon_{\mathcal{O}(W)}^{-1} \circ D_{\mathfrak{b}}(\beta^*)"] & D_{\mathfrak{b}\mathcal{O}(W)}(\mathcal{O}(W))
\end{tikzcd}$$

of ring homomorphisms commutes.

2.3.5 ♯Exercise. Let $\iota : \mathbb{A}^2 \setminus \{(0,0)\} \to \mathbb{A}^2$ denote the inclusion morphism of varieties. Prove that the induced $\mathbb{C}$-algebra homomorphism

$$\iota^* : \mathcal{O}(\mathbb{A}^2) \to \mathcal{O}(\mathbb{A}^2 \setminus \{(0,0)\})$$

is an isomorphism, and deduce that the quasi-affine variety $\mathbb{A}^2 \setminus \{(0,0)\}$ is not affine.

2.3.6 ♯Exercise. Let K be a field, and let $\mathfrak{q}$ be a proper ideal of height 2 in the ring of polynomials $K[X,Y]$ in the indeterminates X, Y. Set $R := K + \mathfrak{q}$, a subring of $K[X,Y]$. Observe that $\mathfrak{q}$ is a maximal ideal of R, and that the simple R-module $R/\mathfrak{q}$ is isomorphic to K, where the R-module structure on K is such that $fa = 0$ for all $f \in \mathfrak{q}$ and all $a \in K$.

(i) Show that the vector space dimension $t := \dim_K(K[X,Y]/\mathfrak{q})$ is finite, and deduce that there is a monic polynomial in $K[X] \cap \mathfrak{q}$ of degree not exceeding t: let p_X be such a polynomial of smallest possible degree. Similarly, let p_Y be a monic polynomial in $K[Y] \cap \mathfrak{q}$ of smallest possible degree. Show that $K[X,Y]$ is a finitely generated R-module.

(ii) Let $c_1, \ldots, c_h$ generate $\mathfrak{q}$ (as an ideal of $K[X,Y]$), let $u := \deg p_X$ and $v := \deg p_Y$. Set

$$S := \{c_i X^j Y^l : 1 \le i \le h,\ 0 \le j < u,\ 0 \le l < v\} \cup \{p_X, p_Y\} \subset R.$$

Show that $R = K[S]$, so that R is a finitely generated K-algebra, and therefore Noetherian.

(iii) Show that there is a unique R-isomorphism $\psi' : K[X,Y] \longrightarrow D_{\mathfrak{q}}(R)$ such that the diagram

$$\begin{tikzcd} R \arrow[r, "\subseteq"] \arrow[dr, "\eta_R"'] & K[X,Y] \arrow[d, "\psi'"] \\ & D_{\mathfrak{q}}(R) \end{tikzcd}$$

commutes, and that ψ' is a ring isomorphism. Deduce that there is an exact sequence $0 \longrightarrow R \longrightarrow K[X,Y] \longrightarrow H^1_{\mathfrak{q}}(R) \longrightarrow 0$ in $\mathscr{C}(R)$, and that $\dim_K(H^1_{\mathfrak{q}}(R)) = t-1$.

(iv) In the special case in which $\mathfrak{q} := XK[X,Y] + Y(Y-1)K[X,Y]$, show that $R = K[X, XY, Y(Y-1), Y^2(Y-1)]$, that $\mathfrak{q}$ is the maximal ideal $(X, XY, Y(Y-1), Y^2(Y-1))$ of R, and that $H^1_{\mathfrak{q}}(R) \cong K$.

(v) In the special case in which $\mathfrak{q} := XK[X,Y] + Y^2K[X,Y]$, show that $R = K[X, Y^2, XY, Y^3]$, that $\mathfrak{q}$ is the maximal ideal (X, Y^2, XY, Y^3) of R, and that $H^1_{\mathfrak{q}}(R) \cong K$.

We are now in a position to present one of the geometric examples which was promised earlier. This is an example to which we shall return several times in this book, and as it was considered by Hartshorne in [20, 3.4.2], we shall refer to it as 'Hartshorne's Example'.

2.3.7 Hartshorne's Example. With the notation of 2.3.1, let V be the affine algebraic set in $\mathbb{A}^4$ given by

$$V := V_{\mathbb{A}^4}(X_1X_4 - X_2X_3,\ X_1^2X_3 + X_1X_2 - X_2^2,\ X_3^3 + X_3X_4 - X_4^2).$$

It is easy to check that the morphism of varieties $\alpha : \mathbb{A}^2 \to \mathbb{A}^4$ for which $\alpha((c,d)) = (c, cd, d(d-1), d^2(d-1))$ for all $(c,d) \in \mathbb{A}^2$ satisfies $\operatorname{Im}\alpha \subseteq V$. In fact, $\operatorname{Im}\alpha = V$, because the map $\beta : V \to \mathbb{A}^2$ defined by

$$\beta((c_1,c_2,c_3,c_4)) = \begin{cases} (c_1, c_2/c_1) & \text{if} \quad c_1 \neq 0, \\ (c_1, c_4/c_3) & \text{if} \quad c_3 \neq 0, \\ (0,0) & \text{if} \quad c_1 = c_3 = 0 \end{cases}$$

(for all $(c_1,c_2,c_3,c_4) \in V$) satisfies $\alpha \circ \beta = \mathrm{Id}_V$, the identity map on V.

Since $\mathbb{A}^2$ is irreducible, it follows that V is irreducible, too. We propose to study the coordinate ring, $R := \mathcal{O}(V)$, of this affine variety. Note that the $\mathbb{C}$-algebra homomorphism

$$\alpha^* : \mathcal{O}(V) \longrightarrow \mathcal{O}(\mathbb{A}^2) = \mathbb{C}[X,Y]$$

induced by α is injective (because α is surjective). Also, if $\iota : V \to \mathbb{A}^4$ denotes the inclusion morphism of varieties, then $\iota^* : \mathbb{C}[X_1, X_2, X_3, X_4] \to \mathcal{O}(V)$ is the natural surjective $\mathbb{C}$-algebra homomorphism given by restriction. Furthermore, $\operatorname{Im}\alpha^* = \mathbb{C}[X, XY, Y(Y-1), Y^2(Y-1)]$, since

$$\alpha^*(\iota^*(X_1)) = X, \qquad \alpha^*(\iota^*(X_2)) = XY,$$

$$\alpha^*(\iota^*(X_3)) = Y(Y-1), \qquad \alpha^*(\iota^*(X_4)) = Y^2(Y-1).$$

It follows from 2.3.6(iv) that, if we use $\mathfrak{m}$ to denote the maximal ideal of R corresponding to the point $(0,0,0,0)$ of V, then $H^1_{\mathfrak{m}}(R) \cong \mathbb{C}$. Note that the open subset $V \setminus V(\mathfrak{m})$ is just $V \setminus \{(0,0,0,0)\}$. By 2.3.2 and 2.3.3, there must be a regular function on $V \setminus \{(0,0,0,0)\}$ that cannot be extended to a regular function on V. The reader might find it interesting for us to find such a function.

Observe that

$$V \setminus \{(0,0,0,0)\} = U_V(x_1) \cup U_V(x_3)$$

and that, on $U_V(x_1) \cap U_V(x_3)$, the functions x_2/x_1 and x_4/x_3 are both defined and are equal. Thus $\beta_2 : V \setminus \{(0,0,0,0)\} \to \mathbb{C}$ defined by

$$\beta_2((c_1, c_2, c_3, c_4)) = \begin{cases} c_2/c_1 & \text{if} \quad c_1 \neq 0, \\ c_4/c_3 & \text{if} \quad c_3 \neq 0 \end{cases}$$

(for all $(c_1, c_2, c_3, c_4) \in V \setminus \{(0,0,0,0)\}$) is regular on the set $V \setminus \{(0,0,0,0)\}$. (In fact, the map from $V \setminus \{(0,0,0,0)\}$ to $\mathbb{A}^2 \setminus \{(0,0),(0,1)\}$ given by $(c_1, c_2, c_3, c_4) \mapsto (c_1, \beta_2((c_1, c_2, c_3, c_4)))$ is actually an isomorphism of (quasi-affine) varieties, because it is inverse to $\alpha\lceil : \mathbb{A}^2 \setminus \{(0,0),(0,1)\} \longrightarrow V \setminus \{(0,0,0,0)\}$.)

Suppose that β_2 can be extended to a regular function $\beta_2' : V \to \mathbb{C}$, and look for a contradiction. Now for $v \in U_V(x_3)$, we have $\beta_2'(v) = x_4(v)/x_3(v)$. Since $x_4(v)^2 = x_3(v)^3 + x_3(v)x_4(v)$, it follows that

$$\begin{aligned} \beta_2'(v)^2 - \beta_2'(v) &= \frac{x_4(v)^2}{x_3(v)^2} - \frac{x_4(v)}{x_3(v)} \\ &= \frac{x_3(v)^3 + x_3(v)x_4(v)}{x_3(v)^2} - \frac{x_4(v)}{x_3(v)} = x_3(v) \end{aligned}$$

for all $v \in U_V(x_3)$. Since $U_V(x_3)$ is a dense open subset of V, we deduce that $\beta_2'^2 - \beta_2' = x_3$. Hence $\beta_2'((0,0,0,0)) = \varepsilon$, where $\varepsilon = 0$ or 1. Now the map $\beta' : V \longrightarrow \mathbb{A}^2 \setminus \{(0, 1-\varepsilon)\}$ given by $(c_1, c_2, c_3, c_4) \longmapsto \big(c_1, \beta_2'((c_1, c_2, c_3, c_4))\big)$ is a morphism of varieties. In fact, it is an isomorphism of varieties, because $\alpha\lceil : \mathbb{A}^2 \setminus \{(0, 1-\varepsilon)\} \longrightarrow V$ is an inverse for it. This shows that the quasi-affine variety $\mathbb{A}^2 \setminus \{(0, 1-\varepsilon)\}$ is affine.

However, Exercise 2.3.5 shows that the quasi-affine variety $\mathbb{A}^2 \setminus \{(0,0)\}$ is not affine, and a similar argument will show that $\mathbb{A}^2 \setminus \{(0,1)\}$ is not affine. We have

therefore arrived at a contradiction, and this shows that $\beta_2 : V \setminus \{(0,0,0,0)\} \to \mathbb{C}$ is a regular function which cannot be extended to a regular function on V.

2.3.8 Exercise. With the notation of 2.3.1, let V be the affine algebraic set in $\mathbb{A}^4$ given by

$$V := V_{\mathbb{A}^4}(X_1^2X_2 - X_3^2,\ X_2^3 - X_4^2,\ X_2X_3 - X_1X_4,\ X_1X_2^2 - X_3X_4).$$

(i) Show that the morphism of varieties $\alpha : \mathbb{A}^2 \to \mathbb{A}^4$ for which $\alpha((c,d)) = (c, d^2, cd, d^3)$ for all $(c,d) \in \mathbb{A}^2$ is injective and that its image is equal to V. Deduce that V is irreducible, and so is an affine variety.

(ii) Show that

$$\alpha\lceil : \mathbb{A}^2 \setminus \{(0,0)\} \longrightarrow V \setminus \{(0,0,0,0)\}$$

is an isomorphism of (quasi-affine) varieties, with inverse

$$\beta : V \setminus \{(0,0,0,0)\} \longrightarrow \mathbb{A}^2 \setminus \{(0,0)\}$$

given by

$$\beta((c_1,c_2,c_3,c_4)) = \begin{cases} (c_1, c_3/c_1) & \text{if} \quad c_1 \neq 0, \\ (c_1, c_4/c_2) & \text{if} \quad c_2 \neq 0 \end{cases}$$

(for all $(c_1,c_2,c_3,c_4) \in V \setminus \{(0,0,0,0)\}$).

(iii) Let $\mathfrak{m}$ denote the maximal ideal of $\mathcal{O}(V)$ corresponding to the point $(0,0,0,0)$ of V. Show that $H^1_{\mathfrak{m}}(\mathcal{O}(V)) \cong \mathbb{C}$.

(iv) Show that the function $\beta_2 : V \setminus \{(0,0,0,0)\} \to \mathbb{C}$ defined by

$$\beta_2((c_1,c_2,c_3,c_4)) = \begin{cases} c_3/c_1 & \text{if} \quad c_1 \neq 0, \\ c_4/c_2 & \text{if} \quad c_2 \neq 0 \end{cases}$$

(for all $(c_1,c_2,c_3,c_4) \in V \setminus \{(0,0,0,0)\}$) is regular on the set $V \setminus \{(0,0,0,0)\}$ but cannot be extended to a regular function on V.

Although Example 2.3.7 and Exercise 2.3.8 look very similar from an algebraic point of view, there are substantial geometric differences between them. This is illustrated by the next two exercises. By the *metric topology* on an affine variety $V \subseteq \mathbb{A}^n$ we mean the (subspace) topology induced on V by the topology defined on $\mathbb{C}^n$ by the standard distance metric of analysis.

2.3.9 Exercise. Let the situation and notation be as in 2.3.7.

Prove that there does not exist a mapping $\beta_2' : V \longrightarrow \mathbb{C}$ which extends β_2 and which is continuous for the metric topology. (Here is a hint: consider points on the path $s : \{t \in \mathbb{R} : 0 \leq t \leq 1\} \to V$ given by $s(t) = \alpha((0,t)) =$

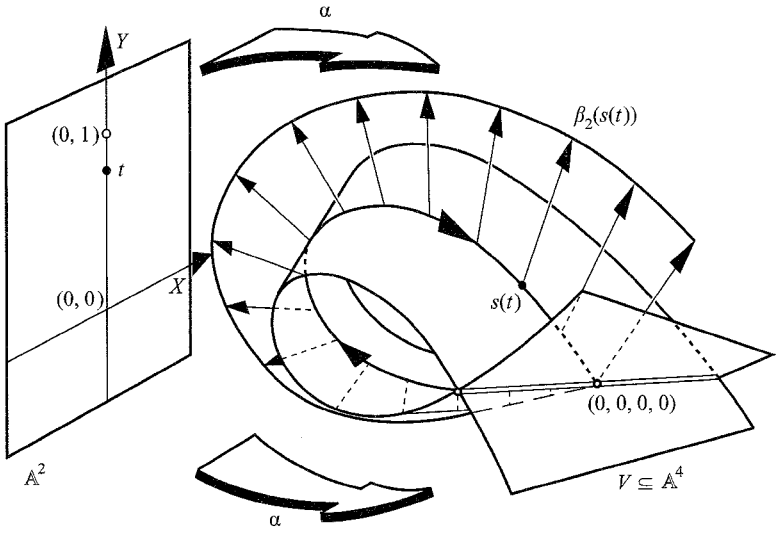

Fig. 2.1.

$(0, 0, t(t-1), t^2(t-1))$ (for $0 \leq t \leq 1$) to show that, in the metric topology, $\lim_{v \to (0,0,0,0)} \beta_2(v)$ does not exist.)

The diagram in Figure 2.1 illustrates the situation.

2.3.10 Exercise. Let the situation and notation be as in 2.3.8.

Let $\beta' : V \longrightarrow \mathbb{A}^2$ be the map which extends

$$\beta : V \setminus \{(0,0,0,0)\} \longrightarrow \mathbb{A}^2 \setminus \{(0,0)\}$$

and is such that $\beta'((0,0,0,0)) = (0,0)$. Show that β' is actually continuous for the metric topology, and deduce that $\alpha : \mathbb{A}^2 \longrightarrow V$ is a homeomorphism with respect to the metric topology. (Again we offer a hint: show that $\beta_2(v)^2 = x_2(v)$ for all $v \in U_V(x_1) \cup U_V(x_2) = V \setminus \{(0,0,0,0)\}$.)

The diagram in Figure 2.2 illustrates the effect of α on two lines L and L' in $\mathbb{A}^2$.

2.3.11 ♯Exercise. (i) Let $0 \neq g \in \mathbb{C}[X, Y] = \mathcal{O}(\mathbb{A}^2)$ (with the notation of 2.3.1). Let $U := U_{\mathbb{A}^2}(g)$, a quasi-affine variety over $\mathbb{C}$, and let $p \in U$. Show that each regular function $f : U \setminus \{p\} \to \mathbb{C}$ can be extended to a regular function on U. (Do not forget that U is affine!)

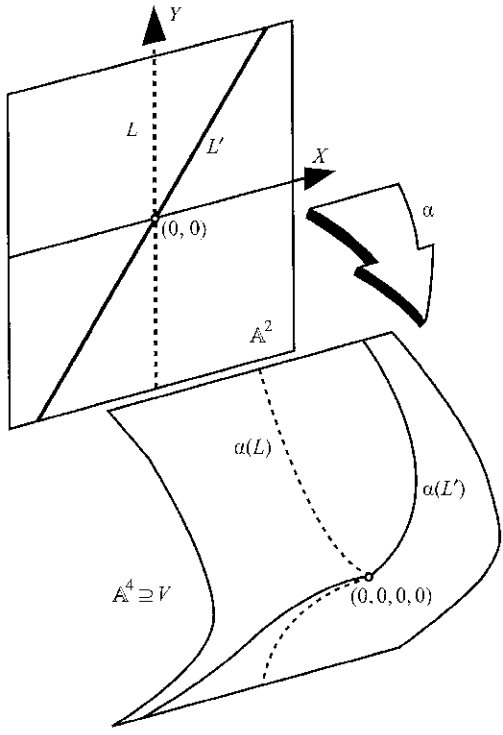

Fig. 2.2.

(ii) Let $f \in K(\mathbb{A}^2)$. There is a maximum open subset U' of $\mathbb{A}^2$ on which f is defined: the *poles of* f are precisely the points of $\mathbb{A}^2 \setminus U'$. Use (i) to show that there does not exist an *isolated* pole of f, that is, a pole q of f for which there exists an open subset U'' of $\mathbb{A}^2$ such that $q \in U''$ but q is the only pole of f in U''.

3

The Mayer-Vietoris Sequence

Any reader with a basic grounding in algebraic topology will recall the important rôle that the Mayer-Vietoris Sequence can play in that subject. There is an analogue of the Mayer-Vietoris Sequence in local cohomology theory, and it can play a foundational rôle in this subject. It is our intention in this chapter to present the basic theory of the Mayer-Vietoris Sequence in local cohomology, and to prepare for several uses of the idea during the subsequent development.

The Mayer-Vietoris Sequence involves two ideals, and so throughout this chapter, $\mathfrak{b}$ will denote a second ideal of R (in addition to $\mathfrak{a}$). Let M be an R-module. The Mayer-Vietoris Sequence provides, among other things, a long exact sequence

$$\begin{array}{ccccccc}
0 & \longrightarrow & H^0_{\mathfrak{a}+\mathfrak{b}}(M) & \longrightarrow & H^0_{\mathfrak{a}}(M) \oplus H^0_{\mathfrak{b}}(M) & \longrightarrow & H^0_{\mathfrak{a}\cap\mathfrak{b}}(M) \\
 & \longrightarrow & H^1_{\mathfrak{a}+\mathfrak{b}}(M) & \longrightarrow & H^1_{\mathfrak{a}}(M) \oplus H^1_{\mathfrak{b}}(M) & \longrightarrow & H^1_{\mathfrak{a}\cap\mathfrak{b}}(M) \\
 & \longrightarrow & \cdots & & & & \cdots \\
 & \longrightarrow & H^i_{\mathfrak{a}+\mathfrak{b}}(M) & \longrightarrow & H^i_{\mathfrak{a}}(M) \oplus H^i_{\mathfrak{b}}(M) & \longrightarrow & H^i_{\mathfrak{a}\cap\mathfrak{b}}(M) \\
 & \longrightarrow & H^{i+1}_{\mathfrak{a}+\mathfrak{b}}(M) & \longrightarrow & \cdots & &
\end{array}$$

of local cohomology modules. Its potential for use in arguments that employ induction on the number of elements in a generating set for an ideal $\mathfrak{c}$ of R can be explained as follows. Suppose that $\mathfrak{c}$ is generated by n elements $c_1, \ldots, c_n$, where $n > 1$. Set $\mathfrak{a} = Rc_1 + \cdots + Rc_{n-1}$ and $\mathfrak{b} = Rc_n$, so that $\mathfrak{c} = \mathfrak{a} + \mathfrak{b}$. Each of $\mathfrak{a}$ and $\mathfrak{b}$ can be generated by fewer than n elements, but at first sight it seems that the ideal $\mathfrak{a} \cap \mathfrak{b}$, which also appears in the Mayer-Vietoris Sequence, could present difficulties. However, $\sqrt{(\mathfrak{a} \cap \mathfrak{b})} = \sqrt{(\mathfrak{a}\mathfrak{b})}$, and so $\Gamma_{\mathfrak{a}\cap\mathfrak{b}} = \Gamma_{\mathfrak{a}\mathfrak{b}}$ by 1.1.3; hence $H^i_{\mathfrak{a}\cap\mathfrak{b}} = H^i_{\mathfrak{a}\mathfrak{b}}$ for all $i \in \mathbb{N}_0$ (see 1.2.3). Moreover, in our situation,

$$\mathfrak{a}\mathfrak{b} = (Rc_1 + \cdots + Rc_{n-1})Rc_n = Rc_1c_n + \cdots + Rc_{n-1}c_n$$

can be generated by $n-1$ elements. Thus $\mathfrak{a}, \mathfrak{b}$ and $\mathfrak{a}\mathfrak{b}$ can all be generated by fewer than n elements, and an appropriate inductive hypothesis would apply to all of them. In addition, we have already obtained (in 2.2.18) a certain amount of information about the local cohomology functors H^i_{Ra} ($i \in \mathbb{N}_0$) with respect to a principal ideal Ra of R: this can provide a basis for an inductive argument.

3.1 Comparison of systems of ideals

The result that $H^i_{\mathfrak{a}\cap\mathfrak{b}} = H^i_{\mathfrak{a}\mathfrak{b}}$ for all $i \in \mathbb{N}_0$ can be viewed as a particular example of a more general phenomenon which concerns a situation where two systems of ideals are 'comparable' in a sense made precise in the proposition below. This comparison result will not only be used to obtain the Mayer-Vietoris Sequence; it will also provide an important ingredient, which is the subject of Exercise 3.1.4, in our proof of the local Lichtenbaum-Hartshorne Vanishing Theorem in Chapter 8.

3.1.1 Proposition. *Let $(\Lambda, \leq)$ and $(\Pi, \leq)$ be (non-empty) directed partially ordered sets, and let $\mathfrak{B} = (\mathfrak{b}_\alpha)_{\alpha\in\Lambda}$ be an inverse family of ideals of R over Λ, as in 1.2.10; let $\mathfrak{C} = (\mathfrak{c}_\beta)_{\beta\in\Pi}$ be an inverse family of ideals of R over Π.*

Assume that, for all $\alpha \in \Lambda$, there exists $\beta \in \Pi$ such that $\mathfrak{c}_\beta \subseteq \mathfrak{b}_\alpha$, and, for all $\beta' \in \Pi$, there exists $\alpha' \in \Lambda$ such that $\mathfrak{b}_{\alpha'} \subseteq \mathfrak{c}_{\beta'}$. Then

(i) $\Gamma_{\mathfrak{B}} = \Gamma_{\mathfrak{C}}$;

(ii) *the negative strongly connected sequences of covariant functors*

$$\left(\varinjlim_{\alpha\in\Lambda} \operatorname{Ext}^i_R(R/\mathfrak{b}_\alpha, \cdot)\right)_{i\in\mathbb{N}_0} \quad \text{and} \quad \left(\varinjlim_{\beta\in\Pi} \operatorname{Ext}^i_R(R/\mathfrak{c}_\beta, \cdot)\right)_{i\in\mathbb{N}_0}$$

are isomorphic; and

(iii) *$\mathfrak{B}$ is a system of ideals of R over Λ (in the sense of 2.1.10) if and only if $\mathfrak{C}$ is a system of ideals of R over Π.*

Note. The functor $\Gamma_{\mathfrak{B}}$ was defined in 1.2.11, while in 1.3.7 it was explained that the negative strongly connected sequence $(\mathscr{R}^i\Gamma_{\mathfrak{B}})_{i\in\mathbb{N}_0}$ of its right derived functors is isomorphic to

$$\left(\varinjlim_{\alpha\in\Lambda} \operatorname{Ext}^i_R(R/\mathfrak{b}_\alpha, \cdot)\right)_{i\in\mathbb{N}_0};$$

of course, similar comments apply to $\Gamma_{\mathfrak{C}}$.

Proof. Part (i) is clear; hence $\mathscr{R}^i\Gamma_{\mathfrak{B}} = \mathscr{R}^i\Gamma_{\mathfrak{C}}$ for all $i \in \mathbb{N}_0$, and the claim in (ii) is an obvious consequence of the above note.

(iii) Suppose that $\mathfrak{B}$ is a system of ideals over Λ, and let $\beta_1, \beta_2 \in \Pi$. By assumption, there exist $\alpha_1, \alpha_2 \in \Lambda$ such that $\mathfrak{b}_{\alpha_1} \subseteq \mathfrak{c}_{\beta_1}$ and $\mathfrak{b}_{\alpha_2} \subseteq \mathfrak{c}_{\beta_2}$. Since $\mathfrak{B}$ is a system of ideals, there exists $\alpha_3 \in \Lambda$ such that $\mathfrak{b}_{\alpha_3} \subseteq \mathfrak{b}_{\alpha_1}\mathfrak{b}_{\alpha_2}$. By assumption, there exists $\beta_3 \in \Pi$ such that $\mathfrak{c}_{\beta_3} \subseteq \mathfrak{b}_{\alpha_3}$. Hence

$$\mathfrak{c}_{\beta_3} \subseteq \mathfrak{b}_{\alpha_3} \subseteq \mathfrak{b}_{\alpha_1}\mathfrak{b}_{\alpha_2} \subseteq \mathfrak{c}_{\beta_1}\mathfrak{c}_{\beta_2}.$$

Hence $\mathfrak{C}$ is a system of ideals over Π.

In view of the symmetry of our hypotheses on $\mathfrak{B}$ and $\mathfrak{C}$, the proof is complete. □

3.1.2 Example. Consider the descending chain $\mathfrak{B} = (\mathfrak{a}^n + \mathfrak{b}^n)_{n\in\mathbb{N}}$ of ideals of R. Since $(\mathfrak{a}+\mathfrak{b})^{2n-1} \subseteq \mathfrak{a}^n + \mathfrak{b}^n \subseteq (\mathfrak{a}+\mathfrak{b})^n$ for all $n \in \mathbb{N}$, it follows from 3.1.1 that $\mathfrak{B}$ is actually a system of ideals of R over $\mathbb{N}$; also, it follows from 1.3.7 and 3.1.1 that the (negative strongly) connected sequences of covariant functors (from $\mathscr{C}(R)$ to $\mathscr{C}(R)$)

$$\left(H^i_{\mathfrak{a}+\mathfrak{b}}\right)_{i\in\mathbb{N}_0}, \qquad \left(\varinjlim_{n\in\mathbb{N}} \operatorname{Ext}^i_R(R/(\mathfrak{a}^n+\mathfrak{b}^n), \bullet)\right)_{i\in\mathbb{N}_0} \qquad \text{and} \qquad \left(H^i_{\mathfrak{B}}\right)_{i\in\mathbb{N}_0}$$

are all isomorphic. In particular, for each $i \in \mathbb{N}_0$, the functors $H^i_{\mathfrak{a}+\mathfrak{b}}$ and $\varinjlim_{n\in\mathbb{N}} \operatorname{Ext}^i_R(R/(\mathfrak{a}^n+\mathfrak{b}^n), \bullet)$ are naturally equivalent.

3.1.3 Exercise. Let $(R, \mathfrak{m})$ be a complete local ring, and let $\mathfrak{B} = (\mathfrak{b}_n)_{n\in\mathbb{N}}$ be a descending chain of $\mathfrak{m}$-primary ideals of R such that $\bigcap_{n\in\mathbb{N}} \mathfrak{b}_n = 0$.

Show that $\mathfrak{B}$ is a system of ideals of R over $\mathbb{N}$, and that the (negative strongly) connected sequences of covariant functors (from $\mathscr{C}(R)$ to $\mathscr{C}(R)$)

$$\left(H^i_{\mathfrak{m}}\right)_{i\in\mathbb{N}_0}, \qquad \left(\varinjlim_{n\in\mathbb{N}} \operatorname{Ext}^i_R(R/\mathfrak{b}_n, \bullet)\right)_{i\in\mathbb{N}_0} \qquad \text{and} \qquad \left(H^i_{\mathfrak{B}}\right)_{i\in\mathbb{N}_0}$$

are all isomorphic. (If you have no idea where to start with this, we suggest that you look up Chevalley's Theorem in, for example, [42, §5.2, Theorem 1] or [67, Chapter VIII, §5, Theorem 13].)

3.1.4 ♯Exercise. Let $(R, \mathfrak{m})$ be a complete local domain, and let $\mathfrak{p}$ be a prime ideal of R of dimension 1, that is, such that $\dim R/\mathfrak{p} = 1$.

(i) Use Chevalley's Theorem ([42, §5.2, Theorem 1] or [67, Chapter VIII, §5, Theorem 13]) to prove that, for each $n \in \mathbb{N}$, there exists $t \in \mathbb{N}$ such that $\mathfrak{p}^{(t)} \subseteq \mathfrak{m}^n$.

(ii) Deduce that $(\mathfrak{p}^{(n)})_{n\in\mathbb{N}}$ is a system of ideals of R over $\mathbb{N}$, and that the (negative strongly) connected sequences of covariant functors (from $\mathscr{C}(R)$ to $\mathscr{C}(R)$)

$$\left(H^i_{\mathfrak{p}}\right)_{i\in\mathbb{N}_0} \quad \text{and} \quad \left(\varinjlim_{n\in\mathbb{N}} \operatorname{Ext}^i_R(R/\mathfrak{p}^{(n)}, \cdot)\right)_{i\in\mathbb{N}_0}$$

are isomorphic.

3.1.5 Corollary. *The descending chain $(\mathfrak{a}^n\cap\mathfrak{b}^n)_{n\in\mathbb{N}}$ is a system of ideals of R (over $\mathbb{N}$), and the (negative strongly) connected sequences of covariant functors (from $\mathscr{C}(R)$ to $\mathscr{C}(R)$)*

$$\left(\varinjlim_{n\in\mathbb{N}} \operatorname{Ext}^i_R(R/(\mathfrak{a}^n \cap \mathfrak{b}^n), \cdot)\right)_{i\in\mathbb{N}_0} \quad \textit{and} \quad \left(H^i_{\mathfrak{a}\cap\mathfrak{b}}\right)_{i\in\mathbb{N}_0}$$

are isomorphic. In particular, for each $i \in \mathbb{N}_0$, the functors $H^i_{\mathfrak{a}\cap\mathfrak{b}} = H^i_{\mathfrak{a}\mathfrak{b}}$ and $\varinjlim_{n\in\mathbb{N}} \operatorname{Ext}^i_R(R/(\mathfrak{a}^n \cap \mathfrak{b}^n), \cdot)$ are naturally equivalent.

Proof. As we mentioned at the beginning of this chapter, it follows from 1.2.3 that $H^i_{\mathfrak{a}\cap\mathfrak{b}} = H^i_{\mathfrak{a}\mathfrak{b}}$ for all $i \in \mathbb{N}_0$. Since $(\mathfrak{a}\cap\mathfrak{b})^n \subseteq \mathfrak{a}^n \cap \mathfrak{b}^n$ for all $n \in \mathbb{N}$, it is enough, in view of 3.1.1, for us to show that, for each $n \in \mathbb{N}$, there exists $q(n) \in \mathbb{N}$ such that $\mathfrak{a}^{q(n)} \cap \mathfrak{b}^{q(n)} \subseteq (\mathfrak{a}\cap\mathfrak{b})^n$. We use the Artin-Rees Lemma [35, Theorem 8.5] to achieve this.

Fix $n \in \mathbb{N}$. By the Artin-Rees Lemma, there exists $c \in \mathbb{N}$ such that $\mathfrak{a}^m \cap \mathfrak{b}^n = \mathfrak{a}^{m-c}(\mathfrak{a}^c \cap \mathfrak{b}^n)$ for all integers $m > c$. Hence

$$\mathfrak{a}^{n+c} \cap \mathfrak{b}^{n+c} \subseteq \mathfrak{a}^{n+c} \cap \mathfrak{b}^n = \mathfrak{a}^n(\mathfrak{a}^c \cap \mathfrak{b}^n) \subseteq \mathfrak{a}^n\mathfrak{b}^n \subseteq (\mathfrak{a}\cap\mathfrak{b})^n.$$

The proof is therefore complete. □

3.1.6 Exercise. For each $h \in \mathbb{N}$, let $\mathfrak{a}^{[h]}$ denote the ideal of R generated by all the h-th powers of elements of $\mathfrak{a}$. Show that, for each $i \in \mathbb{N}_0$, the functor $H^i_{\mathfrak{a}}$ is naturally equivalent to $\varinjlim_{h\in\mathbb{N}} \operatorname{Ext}^i_R(R/\mathfrak{a}^{[h]}, \cdot)$.

(A variation on this is the result that, if R contains a subfield of characteristic $p > 0$, then, for each $i \in \mathbb{N}_0$, the functor $H^i_{\mathfrak{a}}$ is naturally equivalent to $\varinjlim_{e\in\mathbb{N}} \operatorname{Ext}^i_R(R/\mathfrak{a}^{[p^e]}, \cdot)$. There are situations where this observation can be very useful: see, for example, C. Peskine and L. Szpiro [47, Chapitre III, Proposition 1.8(3)], and C. L. Huneke and R. Y. Sharp [28, p. 770].)

3.1.7 Exercise. Suppose that the t elements $a_1, \ldots, a_t$ generate $\mathfrak{a}$. Now $\mathbb{N}^t$ is a directed partially ordered set with respect to the ordering $\leq$ defined by, for $(u_1, \ldots, u_t), (v_1, \ldots, v_t) \in \mathbb{N}^t$,

$$(u_1, \ldots, u_t) \leq (v_1, \ldots, v_t) \quad \text{if and only if} \quad u_j \leq v_j \text{ for all } j = 1, \ldots, t.$$

Show that, for each $i \in \mathbb{N}_0$, the functor $H^i_{\mathfrak{a}}$ is naturally equivalent to

$$\varinjlim_{(u_1,\ldots,u_t)\in\mathbb{N}^t} \operatorname{Ext}^i_R(R/(a_1^{u_1}, \ldots, a_t^{u_t}), \bullet).$$

3.2 Construction of the sequence

Our first lemma in this section provides a fundamental tool for the construction of the Mayer-Vietoris Sequence.

3.2.1 Lemma. *Let N_1, N_2 be submodules of the R-module M. The sequence of R-modules and R-homomorphisms*

$$0 \longrightarrow M/(N_1 \cap N_2) \xrightarrow{\alpha} M/N_1 \oplus M/N_2 \xrightarrow{\beta} M/(N_1 + N_2) \longrightarrow 0,$$

in which $\alpha(m + N_1 \cap N_2) = (m + N_1, m + N_2)$ for all $m \in M$ and

$$\beta((x + N_1, y + N_2)) = x - y + (N_1 + N_2) \qquad \textit{for all } x, y \in M,$$

is exact.

Proof. It is clear that α is injective, that β is surjective and that $\beta \circ \alpha = 0$. Let $x, y \in M$ be such that $(x + N_1, y + N_2) \in \operatorname{Ker} \beta$. Then $x - y = n_1 + n_2$ for some $n_1 \in N_1, n_2 \in N_2$, so that $x - n_1 = y + n_2$ and

$$(x + N_1, y + N_2) = (x - n_1 + N_1, y + n_2 + N_2) \in \operatorname{Im} \alpha. \ \square$$

Briefly, the general strategy for our construction of the Mayer-Vietoris Sequence is to write down, for each $n \in \mathbb{N}$, the long exact sequence of 'Ext' modules which results from application of the functor $\operatorname{Hom}_R(\bullet, M)$ to the exact sequence

$$0 \longrightarrow R/(\mathfrak{a}^n \cap \mathfrak{b}^n) \longrightarrow R/\mathfrak{a}^n \oplus R/\mathfrak{b}^n \longrightarrow R/(\mathfrak{a}^n + \mathfrak{b}^n) \longrightarrow 0$$

resulting from 3.2.1, pass to direct limits, and then appeal to 3.1.2 and 3.1.5 to convert the result into information about local cohomology modules. There is,

however, one minor technical point that needs attention first, and that is the identification of $H^i_{\mathfrak{a}}(\,\cdot\,) \oplus H^i_{\mathfrak{b}}(\,\cdot\,)$ with the functor

$$\varinjlim_{n\in\mathbb{N}} \operatorname{Ext}^i_R(R/\mathfrak{a}^n \oplus R/\mathfrak{b}^n,\ \cdot\,)$$

(obtained using the ideas of 1.2.8 in an obvious way). Although perhaps a little tedious, this is not particularly difficult.

3.2.2 ♯Exercise. In this exercise, we use, for R-modules L and M, the symbolism

$$0 \rightleftarrows L \rightleftarrows L \oplus M \rightleftarrows M \rightleftarrows 0$$

to denote simultaneously the two split exact sequences associated with the direct sum: thus we consider just the arrows pointing to the right to obtain one of these split exact sequences, while the arrows pointing to the left provide the other.

Let $T : \mathscr{C}(R) \times \mathscr{C}(R) \to \mathscr{C}(R)$ be an R-linear functor of two variables which is contravariant in the first variable and covariant in the second. (For example, T could be Hom_R or Ext^i_R for $i \in \mathbb{N}_0$.)

For $n, m \in \mathbb{N}$ with $n \geq m$, let

$$h^n_m : R/\mathfrak{a}^n \longrightarrow R/\mathfrak{a}^m \qquad \text{and} \qquad k^n_m : R/\mathfrak{b}^n \longrightarrow R/\mathfrak{b}^m$$

denote the natural homomorphisms, and consider the commutative diagrams

$$\begin{tikzcd}
0 \arrow[r, shift left] & R/\mathfrak{a}^n \arrow[l, shift left] \arrow[r, shift left] \arrow[d, "h^n_m"] & R/\mathfrak{a}^n \oplus R/\mathfrak{b}^n \arrow[l, shift left] \arrow[r, shift left] \arrow[d, "h^n_m \oplus k^n_m"] & R/\mathfrak{b}^n \arrow[l, shift left] \arrow[r, shift left] \arrow[d, "k^n_m"] & 0 \arrow[l, shift left] \\
0 \arrow[r, shift left] & R/\mathfrak{a}^m \arrow[l, shift left] \arrow[r, shift left] & R/\mathfrak{a}^m \oplus R/\mathfrak{b}^m \arrow[l, shift left] \arrow[r, shift left] & R/\mathfrak{b}^m \arrow[l, shift left] \arrow[r, shift left] & 0 \arrow[l, shift left]
\end{tikzcd},$$

in which the rows represent the canonical split exact sequences. Apply the contravariant, additive functor $T(\,\cdot\,, M)$, and pass to direct limits to obtain split exact sequences

$$0 \rightleftarrows \varinjlim_{n\in\mathbb{N}} T(R/\mathfrak{b}^n, M) \rightleftarrows \varinjlim_{n\in\mathbb{N}} T(R/\mathfrak{a}^n \oplus R/\mathfrak{b}^n, M) \rightleftarrows \varinjlim_{n\in\mathbb{N}} T(R/\mathfrak{a}^n, M) \rightleftarrows 0.$$

Deduce that there is a natural equivalence between the functors

$$\varinjlim_{n\in\mathbb{N}} T(R/\mathfrak{a}^n \oplus R/\mathfrak{b}^n,\ \cdot\,) \qquad \text{and} \qquad \varinjlim_{n\in\mathbb{N}} T(R/\mathfrak{a}^n,\ \cdot\,) \oplus \varinjlim_{n\in\mathbb{N}} T(R/\mathfrak{b}^n,\ \cdot\,)$$

(from $\mathscr{C}(R)$ to itself).

Deduce from 1.3.8 that $\varinjlim_{n\in\mathbb{N}} \operatorname{Ext}^i_R(R/\mathfrak{a}^n \oplus R/\mathfrak{b}^n, \bullet)$ and $H^i_{\mathfrak{a}}(\bullet) \oplus H^i_{\mathfrak{b}}(\bullet)$ are naturally equivalent for each $i \in \mathbb{N}_0$.

3.2.3 The Mayer-Vietoris Sequence. *For each R-module M, there is a long exact sequence (called* the Mayer-Vietoris Sequence for M with respect to $\mathfrak{a}$ and $\mathfrak{b}$*)*

$$\begin{array}{ccccccc}
0 & \longrightarrow & H^0_{\mathfrak{a}+\mathfrak{b}}(M) & \longrightarrow & H^0_{\mathfrak{a}}(M) \oplus H^0_{\mathfrak{b}}(M) & \longrightarrow & H^0_{\mathfrak{a}\cap\mathfrak{b}}(M) \\
 & \longrightarrow & H^1_{\mathfrak{a}+\mathfrak{b}}(M) & \longrightarrow & H^1_{\mathfrak{a}}(M) \oplus H^1_{\mathfrak{b}}(M) & \longrightarrow & H^1_{\mathfrak{a}\cap\mathfrak{b}}(M) \\
 & \longrightarrow & \cdots & & & & \cdots \\
 & \longrightarrow & H^i_{\mathfrak{a}+\mathfrak{b}}(M) & \longrightarrow & H^i_{\mathfrak{a}}(M) \oplus H^i_{\mathfrak{b}}(M) & \longrightarrow & H^i_{\mathfrak{a}\cap\mathfrak{b}}(M) \\
 & \longrightarrow & H^{i+1}_{\mathfrak{a}+\mathfrak{b}}(M) & \longrightarrow & \cdots & &
\end{array}$$

such that, whenever $f : M \longrightarrow N$ is a homomorphism of R-modules, the diagram

$$\begin{tikzcd}
H^i_{\mathfrak{a}+\mathfrak{b}}(M) \arrow[r] \arrow[d, "H^i_{\mathfrak{a}+\mathfrak{b}}(f)"] & H^i_{\mathfrak{a}}(M) \oplus H^i_{\mathfrak{b}}(M) \arrow[r] \arrow[d, "H^i_{\mathfrak{a}}(f)\oplus H^i_{\mathfrak{b}}(f)"] & H^i_{\mathfrak{a}\cap\mathfrak{b}}(M) \arrow[r] \arrow[d, "H^i_{\mathfrak{a}\cap\mathfrak{b}}(f)"] & H^{i+1}_{\mathfrak{a}+\mathfrak{b}}(M) \arrow[d, "H^{i+1}_{\mathfrak{a}+\mathfrak{b}}(f)"'] \\
H^i_{\mathfrak{a}+\mathfrak{b}}(N) \arrow[r] & H^i_{\mathfrak{a}}(N) \oplus H^i_{\mathfrak{b}}(N) \arrow[r] & H^i_{\mathfrak{a}\cap\mathfrak{b}}(N) \arrow[r] & H^{i+1}_{\mathfrak{a}+\mathfrak{b}}(N)
\end{tikzcd}$$

commutes for all $i \in \mathbb{N}_0$.

Proof. Let $n, m \in \mathbb{N}$ with $n \geq m$, and let

$$h^n_m : R/\mathfrak{a}^n \longrightarrow R/\mathfrak{a}^m \qquad \text{and} \qquad k^n_m : R/\mathfrak{b}^n \longrightarrow R/\mathfrak{b}^m$$

denote the natural homomorphisms. The diagram

$$\begin{tikzcd}
0 \arrow[r] & R/(\mathfrak{a}^n \cap \mathfrak{b}^n) \arrow[r] \arrow[d] & R/\mathfrak{a}^n \oplus R/\mathfrak{b}^n \arrow[r] \arrow[d, "h^n_m \oplus k^n_m"] & R/(\mathfrak{a}^n + \mathfrak{b}^n) \arrow[r] \arrow[d] & 0 \\
0 \arrow[r] & R/(\mathfrak{a}^m \cap \mathfrak{b}^m) \arrow[r] & R/\mathfrak{a}^m \oplus R/\mathfrak{b}^m \arrow[r] & R/(\mathfrak{a}^m + \mathfrak{b}^m) \arrow[r] & 0,
\end{tikzcd}$$

in which the upper row is the exact sequence resulting from application of 3.2.1 to the submodules $\mathfrak{a}^n$ and $\mathfrak{b}^n$ of R, the lower row is the corresponding exact sequence for m instead of n, and the two outer vertical homomorphisms are the natural ones, commutes. Therefore, application of the functor $\operatorname{Hom}_R(\bullet, M)$ to this yields a long exact sequence

$$\begin{array}{lll}
0 \longrightarrow \operatorname{Hom}_R(R/(\mathfrak{a}^m+\mathfrak{b}^m), M) & \longrightarrow & \operatorname{Hom}_R(R/\mathfrak{a}^m \oplus R/\mathfrak{b}^m, M) \\
\longrightarrow \operatorname{Hom}_R(R/(\mathfrak{a}^m \cap \mathfrak{b}^m), M) & \longrightarrow & \operatorname{Ext}^1_R(R/(\mathfrak{a}^m+\mathfrak{b}^m), M) \\
\longrightarrow \qquad \cdots & & \\
\longrightarrow \operatorname{Ext}^i_R(R/(\mathfrak{a}^m+\mathfrak{b}^m), M) & \longrightarrow & \operatorname{Ext}^i_R(R/\mathfrak{a}^m \oplus R/\mathfrak{b}^m, M) \\
\longrightarrow \operatorname{Ext}^i_R(R/(\mathfrak{a}^m \cap \mathfrak{b}^m), M) & \longrightarrow & \operatorname{Ext}^{i+1}_R(R/(\mathfrak{a}^m+\mathfrak{b}^m), M) \\
\longrightarrow \qquad \cdots & &
\end{array}$$

and a chain map (induced by the vertical homomorphisms in the last commutative diagram) of this long exact sequence into the corresponding one with m replaced by n. Also, a homomorphism $f : M \to N$ of R-modules induces a chain map of the above displayed long exact sequence into the corresponding sequence with M replaced by N. Now pass to direct limits: it follows that there is a long exact sequence

$$\begin{array}{lll}
0 \longrightarrow \varinjlim\limits_{n\in\mathbb{N}} \operatorname{Hom}_R(R/(\mathfrak{a}^n+\mathfrak{b}^n), M) & \longrightarrow & \varinjlim\limits_{n\in\mathbb{N}} \operatorname{Hom}_R(R/\mathfrak{a}^n \oplus R/\mathfrak{b}^n, M) \\
\longrightarrow \varinjlim\limits_{n\in\mathbb{N}} \operatorname{Hom}_R(R/(\mathfrak{a}^n \cap \mathfrak{b}^n), M) & \longrightarrow & \varinjlim\limits_{n\in\mathbb{N}} \operatorname{Ext}^1_R(R/(\mathfrak{a}^n+\mathfrak{b}^n), M) \\
\longrightarrow \qquad \cdots & & \\
\longrightarrow \varinjlim\limits_{n\in\mathbb{N}} \operatorname{Ext}^i_R(R/(\mathfrak{a}^n+\mathfrak{b}^n), M) & \longrightarrow & \varinjlim\limits_{n\in\mathbb{N}} \operatorname{Ext}^i_R(R/\mathfrak{a}^n \oplus R/\mathfrak{b}^n, M) \\
\longrightarrow \varinjlim\limits_{n\in\mathbb{N}} \operatorname{Ext}^i_R(R/(\mathfrak{a}^n \cap \mathfrak{b}^n), M) & \longrightarrow & \varinjlim\limits_{n\in\mathbb{N}} \operatorname{Ext}^{i+1}_R(R/(\mathfrak{a}^n+\mathfrak{b}^n), M) \\
\longrightarrow \qquad \cdots & &
\end{array}$$

and that $f : M \to N$ induces a chain map of this long exact sequence into the corresponding sequence with M replaced by N. The result is now an immediate consequence of the natural equivalences of functors between

$$\varinjlim_{n\in\mathbb{N}} \operatorname{Ext}^i_R(R/(\mathfrak{a}^n+\mathfrak{b}^n), \,\cdot\,) \quad \text{and} \quad H^i_{\mathfrak{a}+\mathfrak{b}},$$

$$\varinjlim_{n\in\mathbb{N}} \operatorname{Ext}^i_R(R/\mathfrak{a}^n \oplus R/\mathfrak{b}^n, \,\cdot\,) \quad \text{and} \quad H^i_{\mathfrak{a}}(\,\cdot\,) \oplus H^i_{\mathfrak{b}}(\,\cdot\,)$$

and

$$\varinjlim_{n\in\mathbb{N}} \operatorname{Ext}^i_R(R/(\mathfrak{a}^n \cap \mathfrak{b}^n), \,\cdot\,) \quad \text{and} \quad H^i_{\mathfrak{a}\cap\mathfrak{b}}$$

(for $i \in \mathbb{N}_0$) established in 3.1.2, 3.2.2 and 3.1.5 respectively. □

3.2.4 Exercise. Let M be an R-module. Show that the sequence of R-modules and R-homomorphisms

$$0 \longrightarrow \mathrm{Hom}_R(\mathfrak{a}+\mathfrak{b}, M) \xrightarrow{\alpha} \mathrm{Hom}_R(\mathfrak{a}, M) \oplus \mathrm{Hom}_R(\mathfrak{b}, M) \xrightarrow{\beta} \mathrm{Hom}_R(\mathfrak{a}\cap\mathfrak{b}, M)$$

in which $\alpha(f) = (f\lceil_{\mathfrak{a}}, f\lceil_{\mathfrak{b}})$ for all $f \in \mathrm{Hom}_R(\mathfrak{a}+\mathfrak{b}, M)$, and $\beta((g,h)) = g\lceil_{\mathfrak{a}\cap\mathfrak{b}} - h\lceil_{\mathfrak{a}\cap\mathfrak{b}}$ for all $(g,h) \in \mathrm{Hom}_R(\mathfrak{a}, M) \oplus \mathrm{Hom}_R(\mathfrak{b}, M)$, is exact.

Show also that, if M is an injective R-module, then β is an epimorphism.

3.2.5 Exercise. Prove, perhaps with the aid of Exercise 3.2.4, that, for each R-module M, there is a long exact sequence

$$\begin{array}{ccccc}
0 \longrightarrow & D_{\mathfrak{a}+\mathfrak{b}}(M) & \longrightarrow & D_{\mathfrak{a}}(M) \oplus D_{\mathfrak{b}}(M) & \longrightarrow D_{\mathfrak{a}\cap\mathfrak{b}}(M) \\
\longrightarrow & H^2_{\mathfrak{a}+\mathfrak{b}}(M) & \longrightarrow & H^2_{\mathfrak{a}}(M) \oplus H^2_{\mathfrak{b}}(M) & \longrightarrow H^2_{\mathfrak{a}\cap\mathfrak{b}}(M) \\
\longrightarrow & \cdots & & & \cdots \\
\longrightarrow & H^i_{\mathfrak{a}+\mathfrak{b}}(M) & \longrightarrow & H^i_{\mathfrak{a}}(M) \oplus H^i_{\mathfrak{b}}(M) & \longrightarrow H^i_{\mathfrak{a}\cap\mathfrak{b}}(M) \\
\longrightarrow & H^{i+1}_{\mathfrak{a}+\mathfrak{b}}(M) & \longrightarrow & \cdots &
\end{array}$$

such that each homomorphism $f : M \to N$ of R-modules induces a chain map of the above long exact sequence into the corresponding long exact sequence for N.

As we have already mentioned, we shall make substantial use of the Mayer-Vietoris Sequence in this book. We present in the next two sections two illustrations of its use in order to give some idea of its potential to any reader who, wondering why so much effort has been expended in setting up the Mayer-Vietoris Sequence, is impatient to see some applications.

3.3 Arithmetic rank

Our first application of the Mayer-Vietoris Sequence will be in the proof of a result which relates the number of elements required to generate the ideal $\mathfrak{a}$ (and, more precisely, its so-called 'arithmetic rank') to the vanishing of the local cohomology functors $H^i_{\mathfrak{a}}$. This vanishing result provides a powerful tool for applications of local cohomology to algebraic geometry, and, in particular, will play a crucial rôle in our presentation of applications to connectivity in Chapter 19.

3.3.1 Theorem. *Suppose that $\mathfrak{a}$ can be generated by t elements. Then, for every R-module M, we have $H^i_{\mathfrak{a}}(M) = 0$ for all $i > t$.*

Proof. This proof is an example of the use of induction outlined in the introduction to this chapter.

When $t = 0$, we have $\mathfrak{a} = 0$ and $\Gamma_{\mathfrak{a}} = \Gamma_{0R}$ is the identity functor, so that $H^i_{0R}(M) = 0$ for all $i > 0$. The result is therefore true when $t = 0$, and it was proved in 2.2.18(ii) in the special case in which $t = 1$.

Now suppose, inductively, that $t > 1$ and the result has been proved for ideals that can be generated by fewer than t elements. Suppose that $\mathfrak{a}$ is generated by t elements $a_1, \ldots, a_t$. Set $\mathfrak{b} = Ra_1 + \cdots + Ra_{t-1}$ and $\mathfrak{c} = Ra_t$, so that $\mathfrak{a} = \mathfrak{b} + \mathfrak{c}$. By the inductive assumption, $H^i_{\mathfrak{b}}(M) = 0$ for all $i > t - 1$ and $H^i_{\mathfrak{c}}(M) = 0$ for all $i > 1$. By the Mayer-Vietoris Sequence 3.2.3, we have, for an arbitrary $i > t$, an exact sequence

$$H^{i-1}_{\mathfrak{b}\cap\mathfrak{c}}(M) \longrightarrow H^i_{\mathfrak{a}}(M) \longrightarrow H^i_{\mathfrak{b}}(M) \oplus H^i_{\mathfrak{c}}(M).$$

Now $H^{i-1}_{\mathfrak{b}\cap\mathfrak{c}}(M) = H^{i-1}_{\mathfrak{b}\mathfrak{c}}(M)$ by 3.1.5, and, since

$$\mathfrak{b}\mathfrak{c} = (Ra_1 + \cdots + Ra_{t-1})Ra_t = Ra_1a_t + \cdots + Ra_{t-1}a_t$$

can be generated by $t - 1$ elements, it follows from the inductive assumption that $H^{i-1}_{\mathfrak{b}\mathfrak{c}}(M) = 0$. Since $H^i_{\mathfrak{b}}(M) \oplus H^i_{\mathfrak{c}}(M) = 0$ also, we have $H^i_{\mathfrak{a}}(M) = 0$. This completes the inductive step. □

We now combine 3.3.1 with 1.2.3 to obtain a result which is often used in geometric applications. To formulate this result, let us recall the following definition from basic commutative algebra.

3.3.2 Definition. The *arithmetic rank of* $\mathfrak{a}$, denoted by $\operatorname{ara}(\mathfrak{a})$, is the least number of elements of R required to generate an ideal which has the same radical as $\mathfrak{a}$. Thus

$$\operatorname{ara}(\mathfrak{a}) = \min\{n \in \mathbb{N}_0 : \exists\, b_1, \ldots, b_n \in R \text{ with } \sqrt{(Rb_1 + \cdots + Rb_n)} = \sqrt{\mathfrak{a}}\}.$$

Note that $\operatorname{ara}(0R) = 0$.

The next corollary is now immediate from 3.3.1 and 1.2.3.

3.3.3 Corollary. *For every R-module M, we have $H^i_{\mathfrak{a}}(M) = 0$ for all $i > \operatorname{ara}(\mathfrak{a})$.* □

Theorem 3.3.1 can be used to obtain information about the number of elements required to generate a specified ideal; also, in geometric situations, Corollary 3.3.3 can be used to obtain information about the number of 'equations' needed to define an algebraic variety. The following example illustrates this.

3.3.4 Hartshorne's Example revisited. This example concerns the affine variety V in $\mathbb{A}^4$ studied in 2.3.7 and given by

$$V := V_{\mathbb{A}^4}(X_1X_4 - X_2X_3,\ X_1^2X_3 + X_1X_2 - X_2^2,\ X_3^3 + X_3X_4 - X_4^2).$$

By 2.3.7, $V = \{(c, cd, d(d-1), d^2(d-1)) \in \mathbb{A}^4 : c, d \in \mathbb{C}\}$. Thus the lines L, L' in $\mathbb{A}^4$ given by $L := V_{\mathbb{A}^4}(X_2,\ X_3,\ X_4) = \{(c, 0, 0, 0) \in \mathbb{A}^4 : c \in \mathbb{C}\}$ and $L' := V_{\mathbb{A}^4}(X_1 - X_2,\ X_3,\ X_4) = \{(c, c, 0, 0) \in \mathbb{A}^4 : c \in \mathbb{C}\}$ are both contained in V: our aim here is to use 3.3.3 to show that the subvariety L of V cannot be 'defined by one equation', that is, there does not exist a polynomial $f \in \mathbb{C}[X_1, X_2, X_3, X_4]$ such that

$$L = \{p \in V : f(x_1, x_2, x_3, x_4)(p) = 0\}.$$

Our argument uses the morphism of varieties $\alpha : \mathbb{A}^2 \to V$ of 2.3.7 for which $\alpha((c, d)) = (c, cd, d(d-1), d^2(d-1))$ for all $(c, d) \in \mathbb{A}^2$; recall that

$$\alpha\lceil : \mathbb{A}^2 \setminus \{(0,0), (0,1)\} \longrightarrow V \setminus \{(0,0,0,0)\}$$

is an isomorphism of (quasi-affine) varieties. Set $\overline{L} := \{(c, 0) \in \mathbb{A}^2 : c \in \mathbb{C}\}$ and $\overline{L'} := \{(c, 1) \in \mathbb{A}^2 : c \in \mathbb{C}\}$. Note that $\alpha(\overline{L}) = L$ and $\alpha(\overline{L'}) = L'$.

Write $\mathcal{O}(\mathbb{A}^2) = \mathbb{C}[X, Y]$; note that $\overline{L} = V_{\mathbb{A}^2}(Y)$ and that $(0, 1) \notin \overline{L}$. It therefore follows from 2.3.11 that the restriction map

$$\mathcal{O}(\mathbb{A}^2 \setminus \overline{L}) \longrightarrow \mathcal{O}(\mathbb{A}^2 \setminus (\{(0,1)\} \cup \overline{L}))$$

is surjective. Now $\overline{L'} \setminus \{(0,1)\} \subseteq \mathbb{A}^2 \setminus (\{(0,1)\} \cup \overline{L})$: our immediate aim is to show that the restriction map $\mathcal{O}(\mathbb{A}^2 \setminus (\{(0,1)\} \cup \overline{L})) \longrightarrow \mathcal{O}(\overline{L'} \setminus \{(0,1)\})$ is not surjective.

Set $x := X\lceil_{\overline{L'}}$ and consider the regular function $\gamma : \overline{L'} \setminus \{(0,1)\} \to \mathbb{C}$ defined by $\gamma(v) = x(v)^{-1}$ for all $v \in \overline{L'} \setminus \{(0,1)\} = U_{\overline{L'}}(x)$. If γ could be extended to a regular function on $\mathbb{A}^2 \setminus (\{(0,1)\} \cup \overline{L})$, then it would follow from the consequence of 2.3.11 noted in the previous paragraph that γ could be extended to a regular function $\gamma' : \mathbb{A}^2 \setminus \overline{L} \to \mathbb{C}$. Let γ'' be the restriction of γ' to $\overline{L'}$, a subset of $\mathbb{A}^2 \setminus \overline{L}$. It then follows that, for all $v \in U_{\overline{L'}}(x)$, we have $\gamma''(v)x(v) = 1$. However, $U_{\overline{L'}}(x)$ is a dense open subset of $\overline{L'}$, and so $\gamma''(v)x(v) = 1$ for all $v \in \overline{L'}$. As this implies that $0 = 1$, we have obtained a contradiction! Thus the restriction map

$$\mathcal{O}(\mathbb{A}^2 \setminus (\{(0,1)\} \cup \overline{L})) \longrightarrow \mathcal{O}(\overline{L'} \setminus \{(0,1)\})$$

is not surjective, as claimed.

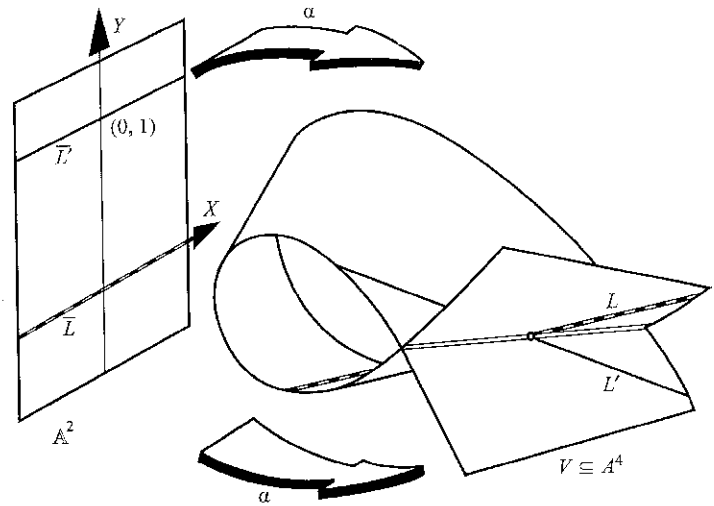

Next, $\alpha(\mathbb{A}^2 \setminus (\{(0,1)\} \cup \overline{L})) = V \setminus L$ and $\alpha(\overline{L'} \setminus \{(0,1)\}) = L' \setminus \{(0,0,0,0)\}$. There is therefore a commutative diagram

$$\begin{array}{ccc} \mathcal{O}(V \setminus L) & \longrightarrow & \mathcal{O}(L' \setminus \{(0,0,0,0)\}) \\ \cong \downarrow & & \downarrow \cong \\ \mathcal{O}(\mathbb{A}^2 \setminus (\{(0,1)\} \cup \overline{L})) & \longrightarrow & \mathcal{O}(\overline{L'} \setminus \{(0,1)\}) \end{array}$$

in which the vertical isomorphisms are induced by (the appropriate restrictions of) α. Therefore the map $\sigma : \mathcal{O}(V \setminus L) \longrightarrow \mathcal{O}(L' \setminus \{(0,0,0,0)\})$ given by restriction is not surjective.

Let $\iota : L' \longrightarrow V$ be the inclusion morphism of varieties, and let $\mathfrak{c}$ denote the vanishing ideal $\{f \in \mathcal{O}(V) : f(v) = 0 \text{ for all } v \in L\}$ of L in $\mathcal{O}(V)$. With the notation of 2.3.2 and 2.3.4, we have

$$V(\mathfrak{c}\mathcal{O}(L')) = \iota^{-1}(V(\mathfrak{c})) = \iota^{-1}(L) = L \cap L' = \{(0,0,0,0)\} \subset L',$$

and so $\mathfrak{c}\mathcal{O}(L') \neq 0$. Note also that the restriction map σ of the preceding paragraph is just $\iota\lceil^* : \mathcal{O}(V \setminus V(\mathfrak{c})) \longrightarrow \mathcal{O}(L' \setminus V(\mathfrak{c}\mathcal{O}(L')))$. Therefore $\iota\lceil^*$ is not surjective, and so it follows from 2.3.4 that $D_{\mathfrak{c}}(\iota^*) : D_{\mathfrak{c}}(\mathcal{O}(V)) \longrightarrow D_{\mathfrak{c}}(\mathcal{O}(L'))$ is not surjective. Hence, if $\mathfrak{b} := \mathrm{Ker}(\iota^*)$, we have $\mathcal{R}^1 D_{\mathfrak{c}}(\mathfrak{b}) \neq 0$, so that $H^2_{\mathfrak{c}}(\mathfrak{b}) \neq 0$ by 2.2.4(ii). It therefore follows from 3.3.3 that $\mathrm{ara}(\mathfrak{c}) \geq 2$. Thus the subvariety L of V cannot be 'defined by one equation'.

3.3.5 Exercise. Show that, over the ring $R[X_1, X_2, X_3, X_4, X_5, X_6]$ of polynomials in six indeterminates with coefficients in R,

$$H^4_{(X_1,X_2,X_3)(X_4,X_5,X_6)}(R[X_1, X_2, X_3, X_4, X_5, X_6]) = 0.$$

3.3.6 Exercise. Show that, over the polynomial ring $R[X_1, X_2, X_3]$,

$$H^3_{(X_1^2,X_1X_2+X_2^3,X_2^4)}(R[X_1, X_2, X_3]) = 0.$$

3.4 Direct limits

Our second illustration of the use of the Mayer-Vietoris Sequence is in our proof that the local cohomology functors 'commute with the formation of direct limits'. This is an important property of local cohomology, which plays a significant rôle in Grothendieck's development in [18]. It should be noted that our approach below avoids the use of an injective resolution of a direct system of R-modules and R-homomorphisms in the category formed by such direct systems. It is possible to approach this theory in a different way, based on the interchange of the order of direct limits; however, we have chosen the approach below because we consider it to be more illuminating.

3.4.1 Terminology. Let $(\Lambda, \leq)$ be a (non-empty) directed partially ordered set, and let $(W_\alpha)_{\alpha\in\Lambda}$ be a direct system of R-modules over Λ, with constituent R-homomorphisms $h^\alpha_\beta : W_\beta \to W_\alpha$ (for each $(\alpha, \beta) \in \Lambda \times \Lambda$ with $\alpha \geq \beta$). Set $W_\infty := \varinjlim_{\alpha\in\Lambda} W_\alpha$, and let $h_\alpha : W_\alpha \to W_\infty$ be the canonical map (for each $\alpha \in \Lambda$).

Let $T : \mathscr{C}(R) \to \mathscr{C}(R)$ be a covariant functor. It is immediate from the definition of functor that the $T(h^\alpha_\beta)$ turn the family $(T(W_\alpha))_{\alpha\in\Lambda}$ into a direct system of R-modules and R-homomorphisms over Λ. Also, whenever $\alpha, \beta \in \Lambda$ with $\alpha \geq \beta$, the commutative diagram

$$\begin{tikzcd} W_\beta \arrow[r, "h^\alpha_\beta"] \arrow[dr, "h_\beta"'] & W_\alpha \arrow[d, "h_\alpha"] \\ & W_\infty \end{tikzcd}$$

induces the commutative diagram

$$\begin{tikzcd} T(W_\beta) \arrow[r, "T(h_\beta^\alpha)"] \arrow[dr, "T(h_\beta)"'] & T(W_\alpha) \arrow[d, "T(h_\alpha)"] \\ & T(W_\infty)\,, \end{tikzcd}$$

and so there is induced an R-homomorphism

$$\omega_T : \varinjlim_{\alpha\in\Lambda} T(W_\alpha) \longrightarrow T\left(\varinjlim_{\alpha\in\Lambda} W_\alpha\right) = T(W_\infty).$$

If, for all choices of such a directed set Λ and such a direct system $(W_\alpha)_{\alpha\in\Lambda}$ over Λ, the map ω_T is an isomorphism, then we shall say that T *commutes with the formation of direct limits* or, more loosely, T *commutes with direct limits.*

In the next exercise, we again use the notation M_a, for an R-module M and $a \in R$, to denote the module of fractions of M with respect to the multiplicatively closed subset $\{a^i : i \in \mathbb{N}_0\}$. In fact, we consider the functor $(\,\cdot\,)_a : \mathscr{C}(R) \longrightarrow \mathscr{C}(R)$.

3.4.2 ♯Exercise. Let $a \in R$. Show that the functor $(\,\cdot\,)_a : \mathscr{C}(R) \longrightarrow \mathscr{C}(R)$ commutes with direct limits.

The next exercise gives another example, again needed later in the book, of a functor which commutes with direct limits.

3.4.3 ♯Exercise. Let $(\Lambda, \leq)$ be a (non-empty) directed partially ordered set, and let $(W_\alpha)_{\alpha\in\Lambda}$ be a direct system of R-modules over Λ, with constituent R-homomorphisms $h_\beta^\alpha : W_\beta \to W_\alpha$ (for each $\alpha, \beta \in \Lambda$ with $\alpha \geq \beta$). Set $W_\infty := \varinjlim_{\alpha\in\Lambda} W_\alpha$.

(i) Show that $\left(\varinjlim_{\alpha\in\Lambda} \operatorname{Ext}_R^i(\,\cdot\,, W_\alpha)\right)_{i\in\mathbb{N}_0}$ can be made into a negative strongly connected sequence of contravariant functors from $\mathscr{C}(R)$ to $\mathscr{C}(R)$ in such a way that the natural homomorphisms (of 3.4.1) give rise to a homomorphism

$$\Psi = (\psi^i)_{i\in\mathbb{N}_0} : \left(\varinjlim_{\alpha\in\Lambda} \operatorname{Ext}_R^i(\,\cdot\,, W_\alpha)\right)_{i\in\mathbb{N}_0} \longrightarrow \left(\operatorname{Ext}_R^i(\,\cdot\,, W_\infty)\right)_{i\in\mathbb{N}_0}$$

of connected sequences.

(ii) Prove that ψ_R^0 is an isomorphism, and deduce that ψ_F^0 is an isomorphism whenever F is a finitely generated free R-module.

(iii) Deduce that ψ_M^0 is an isomorphism whenever M is a finitely generated R-module.

(iv) Prove, by induction on i, that, for each $i \in \mathbb{N}_0$, the homomorphism ψ_M^i is an isomorphism whenever M is a finitely generated R-module.

(v) Deduce that, whenever M is a finitely generated R-module, the functor $\operatorname{Ext}_R^i(M, \cdot)$ commutes with direct limits, for each $i \in \mathbb{N}_0$.

Our main aim during the remainder of this chapter is to show that the local cohomology functors $H_{\mathfrak{a}}^i$ ($i \in \mathbb{N}_0$) commute with direct limits; we show first that the $\mathfrak{a}$-torsion functor commutes with direct limits.

3.4.4 Proposition. *The $\mathfrak{a}$-torsion functor $\Gamma_{\mathfrak{a}}$ commutes with direct limits.*

Proof. We use the notation of 3.4.1, so that $(\Lambda, \leq)$ is a (non-empty) directed partially ordered set, and $(W_\alpha)_{\alpha\in\Lambda}$ is a direct system of R-modules over Λ, with constituent R-homomorphisms $h_\beta^\alpha : W_\beta \to W_\alpha$ (for each $(\alpha, \beta) \in \Lambda \times \Lambda$ with $\alpha \geq \beta$). We must show that the R-homomorphism

$$\omega_{\Gamma_{\mathfrak{a}}} : \varinjlim_{\alpha\in\Lambda} \Gamma_{\mathfrak{a}}(W_\alpha) \longrightarrow \Gamma_{\mathfrak{a}}\left(\varinjlim_{\alpha\in\Lambda} W_\alpha\right)$$

is an isomorphism. We write $F_\infty := \varinjlim_{\alpha\in\Lambda} \Gamma_{\mathfrak{a}}(W_\alpha)$ and $W_\infty := \varinjlim_{\alpha\in\Lambda} W_\alpha$, and, for $\alpha \in \Lambda$, we use $f_\alpha : \Gamma_{\mathfrak{a}}(W_\alpha) \to F_\infty$ to denote the canonical map.

A typical element of $\operatorname{Ker} \omega_{\Gamma_{\mathfrak{a}}}$ can be expressed as $f_\alpha(w_\alpha)$ for some $\alpha \in \Lambda$ and $w_\alpha \in \Gamma_{\mathfrak{a}}(W_\alpha)$, where $\Gamma_{\mathfrak{a}}(h_\alpha)(w_\alpha) = 0$ in $\Gamma_{\mathfrak{a}}(W_\infty)$. Thus $h_\alpha(w_\alpha) = 0$ in W_∞, and so there exists $\gamma \in \Lambda$ with $\gamma \geq \alpha$ such that $h_\alpha^\gamma(w_\alpha) = 0$. Since $w_\alpha \in \Gamma_{\mathfrak{a}}(W_\alpha)$, this means that $\Gamma_{\mathfrak{a}}(h_\alpha^\gamma)(w_\alpha) = 0$ in $\Gamma_{\mathfrak{a}}(W_\gamma)$, and so $f_\alpha(w_\alpha) = f_\gamma\left(\Gamma_{\mathfrak{a}}(h_\alpha^\gamma)(w_\alpha)\right) = 0$. Hence $\omega_{\Gamma_{\mathfrak{a}}}$ is injective.

We now show that $\omega_{\Gamma_{\mathfrak{a}}}$ is surjective. Let $y \in \Gamma_{\mathfrak{a}}(W_\infty)$. There exists $\alpha \in \Lambda$ and $w_\alpha \in W_\alpha$ such that $y = h_\alpha(w_\alpha)$. We know that y is annihilated by a power of $\mathfrak{a}$: let $j \in \mathbb{N}$ be such that $\mathfrak{a}^j y = 0$. Let $\mathfrak{a}^j$ be generated by $r_1, \ldots, r_n$. For each $i = 1, \ldots, n$, we have $h_\alpha(r_i w_\alpha) = 0$, so that there exists $\beta_i \in \Lambda$ with $\beta_i \geq \alpha$ such that $h_\alpha^{\beta_i}(r_i w_\alpha) = 0$. Since Λ is directed, there exists $\gamma \in \Lambda$ such that $\gamma \geq \beta_i$ for all $i = 1, \ldots, n$. We now have

$$r_i h_\alpha^\gamma(w_\alpha) = r_i h_{\beta_i}^\gamma(h_\alpha^{\beta_i}(w_\alpha)) = h_{\beta_i}^\gamma(h_\alpha^{\beta_i}(r_i w_\alpha)) = 0$$

for all $i = 1, \ldots, n$, so that $\mathfrak{a}^j h_\alpha^\gamma(w_\alpha) = 0$ and $h_\alpha^\gamma(w_\alpha) \in \Gamma_{\mathfrak{a}}(W_\gamma)$. But

$$y = h_\alpha(w_\alpha) = h_\gamma(h_\alpha^\gamma(w_\alpha)) = \Gamma_{\mathfrak{a}}(h_\gamma)(h_\alpha^\gamma(w_\alpha)) \in \operatorname{Im}(\Gamma_{\mathfrak{a}}(h_\gamma)).$$

Set $z_\gamma := h_\alpha^\gamma(w_\alpha)$, an element of $\Gamma_\mathfrak{a}(W_\gamma)$. Now $f_\gamma(z_\gamma) \in F_\infty$, and

$$\omega_{\Gamma_\mathfrak{a}}(f_\gamma(z_\gamma)) = \Gamma_\mathfrak{a}(h_\gamma)(z_\gamma) = y.$$

Hence $\omega_{\Gamma_\mathfrak{a}}$ is surjective and the proof is complete. □

3.4.5 ♯Exercise. Let $T : \mathscr{C}(R) \to \mathscr{C}(R)$ be a covariant, additive functor which commutes with direct limits. Let $(L_\theta)_{\theta\in\Omega}$ be a non-empty family of R-modules; for each $\phi \in \Omega$, let $q_\phi : L_\phi \longrightarrow \bigoplus_{\theta\in\Omega} L_\theta$ be the canonical injection.

Prove that $T\left(\bigoplus_{\theta\in\Omega} L_\theta\right)$ is the direct sum of its family of submodules $(\operatorname{Im} T(q_\theta))_{\theta\in\Omega}$, so that

$$T\left(\bigoplus_{\theta\in\Omega} L_\theta\right) = \bigoplus_{\theta\in\Omega} \operatorname{Im} T(q_\theta) \cong \bigoplus_{\theta\in\Omega} T(L_\theta).$$

We shall describe this result by the statement that T *commutes with direct sums.*

To show that the i-th right derived functors of $\Gamma_\mathfrak{a}$ (for $i \in \mathbb{N}$) also commute with direct limits, we plan to argue by induction on the number of elements needed to generate $\mathfrak{a}$, and to use the Mayer-Vietoris Sequence to complete the inductive step. The following lemma will be helpful.

3.4.6 Lemma. *Let Q, S, T, U, V be covariant functors (from $\mathscr{C}(R)$ to $\mathscr{C}(R)$) and let $\sigma : Q \longrightarrow S$, $\tau : S \longrightarrow T$, $\mu : T \longrightarrow U$, $\nu : U \longrightarrow V$ be natural transformations of functors such that, for each R-module M, the sequence*

$$Q(M) \xrightarrow{\sigma_M} S(M) \xrightarrow{\tau_M} T(M) \xrightarrow{\mu_M} U(M) \xrightarrow{\nu_M} V(M)$$

is exact. Suppose that Q, S, U, V all commute with direct limits. Then T also commutes with direct limits.

Proof. We again use the notation of 3.4.1. For each $\alpha, \beta \in \Lambda$ with $\alpha \geq \beta$, there is a commutative diagram

$$\begin{tikzcd}
Q(W_\beta) \arrow[r, "\sigma_{W_\beta}"] \arrow[d, "Q(h_\beta^\alpha)"] & S(W_\beta) \arrow[r, "\tau_{W_\beta}"] \arrow[d, "S(h_\beta^\alpha)"] & T(W_\beta) \arrow[r, "\mu_{W_\beta}"] \arrow[d, "T(h_\beta^\alpha)"] & U(W_\beta) \arrow[r, "\nu_{W_\beta}"] \arrow[d, "U(h_\beta^\alpha)"] & V(W_\beta) \arrow[d, "V(h_\beta^\alpha)"] \\
Q(W_\alpha) \arrow[r, "\sigma_{W_\alpha}"'] & S(W_\alpha) \arrow[r, "\tau_{W_\alpha}"'] & T(W_\alpha) \arrow[r, "\mu_{W_\alpha}"'] & U(W_\alpha) \arrow[r, "\nu_{W_\alpha}"'] & V(W_\alpha)
\end{tikzcd}$$

with exact rows, and so there is induced an exact sequence

$$Q_\infty \xrightarrow{\sigma_\infty} S_\infty \xrightarrow{\tau_\infty} T_\infty \xrightarrow{\mu_\infty} U_\infty \xrightarrow{\nu_\infty} V_\infty,$$

where $Q_\infty := \varinjlim_{\alpha\in\Lambda} Q(W_\alpha)$, *etcetera*, and $\sigma_\infty := \varinjlim_{\alpha\in\Lambda} \sigma_{W_\alpha}$, *etcetera*. It is easy to see from the definition of $\omega_Q, \ldots, \omega_V$ in 3.4.1 that the diagram

$$\begin{tikzcd}
Q_\infty \arrow[r, "\sigma_\infty"] \arrow[d, "\omega_Q"] & S_\infty \arrow[r, "\tau_\infty"] \arrow[d, "\omega_S"] & T_\infty \arrow[r, "\mu_\infty"] \arrow[d, "\omega_T"] & U_\infty \arrow[r, "\nu_\infty"] \arrow[d, "\omega_U"] & V_\infty \arrow[d, "\omega_V"] \\
Q(W_\infty) \arrow[r, "\sigma_{W_\infty}"'] & S(W_\infty) \arrow[r, "\tau_{W_\infty}"'] & T(W_\infty) \arrow[r, "\mu_{W_\infty}"'] & U(W_\infty) \arrow[r, "\nu_{W_\infty}"'] & V(W_\infty)
\end{tikzcd}$$

commutes. Since this diagram has exact rows and $\omega_Q, \omega_S, \omega_U$ and ω_V are isomorphisms by hypothesis, it follows from the Five Lemma that ω_T is an isomorphism too. □

3.4.7 Remark. It is clear that the identity functor $\mathrm{Id} : \mathscr{C}(R) \to \mathscr{C}(R)$ and the zero functor $0 : \mathscr{C}(R) \to \mathscr{C}(R)$ (for which $0(M) = 0$ for all R-modules M) commute with direct limits.

3.4.8 Corollary. *Suppose that, for some $i \in \mathbb{N}_0$, the functors $H^i_{\mathfrak{a}}$ and $H^i_{\mathfrak{b}}$ commute with direct limits. Then $H^i_{\mathfrak{a}}(\,\cdot\,) \oplus H^i_{\mathfrak{b}}(\,\cdot\,)$ commutes with direct limits.*

Proof. This is an easy consequence of 3.4.6 and 3.4.7: for each R-module M, consider the canonical split exact sequences

$$0 \rightleftarrows H^i_{\mathfrak{a}}(M) \rightleftarrows H^i_{\mathfrak{a}}(M) \oplus H^i_{\mathfrak{b}}(M) \rightleftarrows H^i_{\mathfrak{b}}(M) \rightleftarrows 0. \ \square$$

3.4.9 Proposition. *Let $a \in R$. Then the local cohomology functor H^1_{Ra} commutes with direct limits.*

Proof. By 2.2.17, there are natural transformations of functors

$$\tau : \mathrm{Id} \longrightarrow (\,\cdot\,)_a \qquad \text{and} \qquad \sigma : (\,\cdot\,)_a \longrightarrow H^1_{Ra}$$

such that, for all R-modules M, the sequence

$$M \xrightarrow{\tau_M} M_a \xrightarrow{\sigma_M} H^1_{Ra}(M) \longrightarrow 0 \longrightarrow 0$$

is exact. We propose to use 3.4.6, and with this in mind we observe that, by 3.4.2, the functor $(\,\cdot\,)_a : \mathscr{C}(R) \longrightarrow \mathscr{C}(R)$ commutes with direct limits. (This will be obvious to any reader familiar with the facts that $(\cdot)_a$ is naturally equivalent to $(\cdot) \otimes_R R_a : \mathscr{C}(R) \longrightarrow \mathscr{C}(R)$ and that, for an arbitrary R-module N, the functor $(\,\cdot\,) \otimes_R N : \mathscr{C}(R) \longrightarrow \mathscr{C}(R)$ commutes with direct limits. Alternatively, it is easy to prove directly.)

The claim now follows immediately from 3.4.6 and 3.4.7. □

We are now in a position to prove that the local cohomology functors $H^i_{\mathfrak{a}}$ ($i \in \mathbb{N}_0$) all commute with direct limits.

3.4.10 Theorem. *For all $i \in \mathbb{N}_0$, the local cohomology functor $H^i_{\mathfrak{a}}$ commutes with direct limits.*

Proof. This proof is another example of the use of induction outlined in the introduction to this chapter.

We suppose that $\mathfrak{a}$ can be generated by t elements and proceed by induction on t. When $t = 0$, we have $\mathfrak{a} = 0$ and $\Gamma_{\mathfrak{a}}$ is the identity functor, so that $H^i_{\mathfrak{a}} = 0$ for all $i \in \mathbb{N}$. The result is therefore immediate from 3.4.7 in this case.

We proved in 3.4.4 that $\Gamma_{\mathfrak{a}}$ commutes with direct limits. When $t = 1$, it follows from 3.3.1 that $H^i_{\mathfrak{a}} = 0$ for all $i > 1$, and from 3.4.9 that $H^1_{\mathfrak{a}}$ commutes with direct limits. The result is therefore also proved in the case when $t = 1$.

Now suppose, inductively, that $t > 1$ and the result has been proved for ideals that can be generated by fewer than t elements. Suppose that $\mathfrak{a}$ is generated by t elements $a_1, \ldots, a_t$. Set $\mathfrak{b} = Ra_1 + \cdots + Ra_{t-1}$ and $\mathfrak{c} = Ra_t$, so that $\mathfrak{a} = \mathfrak{b} + \mathfrak{c}$. Note that

$$\mathfrak{b}\mathfrak{c} = (Ra_1 + \cdots + Ra_{t-1})Ra_t = Ra_1a_t + \cdots + Ra_{t-1}a_t$$

can be generated by $t - 1$ elements, and that $H^i_{\mathfrak{b}\cap\mathfrak{c}} = H^i_{\mathfrak{b}\mathfrak{c}}$ for all $i \in \mathbb{N}_0$ by 3.1.5.

It therefore follows from the inductive hypothesis and what we have already proved that the local cohomology functors $H^i_{\mathfrak{b}}$ ($i \in \mathbb{N}_0$), $H^i_{\mathfrak{c}}$ ($i \in \mathbb{N}_0$) and $H^i_{\mathfrak{b}\cap\mathfrak{c}}$ ($i \in \mathbb{N}_0$) all commute with direct limits. Hence, by 3.4.8, all the functors $H^i_{\mathfrak{a}}(\,\cdot\,) \oplus H^i_{\mathfrak{b}}(\,\cdot\,)$ ($i \in \mathbb{N}_0$) commute with direct limits.

It now follows from 3.4.6 and the Mayer-Vietoris Sequence (we use here the full statement of 3.2.3) that the functors $H^i_{\mathfrak{b}+\mathfrak{c}}$ ($i \in \mathbb{N}_0$) all commute with direct limits. Since $\mathfrak{a} = \mathfrak{b} + \mathfrak{c}$, the inductive step is complete. □

3.4.11 Corollary. *The $\mathfrak{a}$-transform functor $D_{\mathfrak{a}}$ commutes with direct limits.*

Consequently, by 3.4.5, *the functor $D_{\mathfrak{a}}$ commutes with direct sums (in the sense of Exercise* 3.4.5*).*

Proof. By 2.2.4(i), there are natural transformations of functors

$$\xi : \Gamma_{\mathfrak{a}} \longrightarrow \mathrm{Id}, \qquad \eta : \mathrm{Id} \longrightarrow D_{\mathfrak{a}}, \qquad \zeta^0 : D_{\mathfrak{a}} \longrightarrow H^1_{\mathfrak{a}}$$

such that, for each R-module M, the sequence

$$\Gamma_{\mathfrak{a}}(M) \xrightarrow{\xi_M} M \xrightarrow{\eta_M} D_{\mathfrak{a}}(M) \xrightarrow{\zeta^0_M} H^1_{\mathfrak{a}}(M) \longrightarrow 0$$

is exact. Since $\Gamma_{\mathfrak{a}}$ and $H^1_{\mathfrak{a}}$ commute with direct limits (by 3.4.4 and 3.4.10 respectively), the claim follows from 3.4.6. □

3.4.12 Exercise. Suppose that, for some $i \in \mathbb{N}_0$, we have $H^i_{\mathfrak{a}}(R) = 0$. Show that $H^i_{\mathfrak{a}}(P) = 0$ for every projective R-module P.

3.4.13 Exercise. Let K' denote the full ring of fractions of R, that is, $K' := S^{-1}R$, where S is the set of all non-zerodivisors of R. Show that, if, for some integer $i \in \mathbb{N}_0$, we have $H^i_{\mathfrak{a}}(R) = 0$, then $H^i_{\mathfrak{a}}(K') = 0$ too.

Thus, in particular, if R is an integral domain with field of fractions K and $H^i_{\mathfrak{a}}(R) = 0$ for some $i \in \mathbb{N}_0$, then $H^i_{\mathfrak{a}}(K) = 0$.

4

Change of rings

The main results of this chapter concern a homomorphism of commutative Noetherian rings $f : R \longrightarrow R'$. More precisely, we shall prove two fundamental comparison results for local cohomology modules in this context. The first of these, which we shall call the 'Independence Theorem', compares, for an R'-module M' and an $i \in \mathbb{N}_0$, the local cohomology modules $H^i_{\mathfrak{a}}(M')$ and $H^i_{\mathfrak{a}R'}(M')$: to form the first of these, we consider M' as an R-module by restriction of scalars using f; also, $\mathfrak{a}R'$ denotes the extension of $\mathfrak{a}$ to R' under f. Our second main result, which we shall refer to as the 'Flat Base Change Theorem', compares the local cohomology modules $H^i_{\mathfrak{a}}(M) \otimes_R R'$ and $H^i_{\mathfrak{a}R'}(M \otimes_R R')$ for $i \in \mathbb{N}_0$ and an arbitrary R-module M under the additional assumption that the ring homomorphism f is flat.

Our main results rely on the fact that certain modules are acyclic with respect to torsion functors. We say that an R-module A is $\Gamma_{\mathfrak{a}}$-*acyclic* precisely when $H^i_{\mathfrak{a}}(A) = 0$ for all $i > 0$. As was explained in 1.2.2, the most basic method for calculation, for an R-module M and an $i \in \mathbb{N}_0$, of $H^i_{\mathfrak{a}}(M)$ is to take an injective resolution $I^\bullet$ of M, apply $\Gamma_{\mathfrak{a}}$ to $I^\bullet$ to obtain the complex $\Gamma_{\mathfrak{a}}(I^\bullet)$, and take the i-th cohomology module of this complex: we have $H^i_{\mathfrak{a}}(M) = H^i(\Gamma_{\mathfrak{a}}(I^\bullet))$. However, it is an easy exercise in homological algebra to show that a resolution of M by $\Gamma_{\mathfrak{a}}$-acyclic R-modules will serve this purpose just as well.

Of course, injective R-modules are $\Gamma_{\mathfrak{a}}$-acyclic, but in general the class of $\Gamma_{\mathfrak{a}}$-acyclic R-modules is larger than the class of injective R-modules. Let $f : R \longrightarrow R'$ be a homomorphism of commutative Noetherian rings. We shall show that, if I' is an injective R'-module, then, when viewed as an R-module by restriction of scalars, I' is $\Gamma_{\mathfrak{a}}$-acyclic. We shall also show that, if the ring homomorphism f is flat, then, for each injective R-module I, the R'-module $I \otimes_R R'$ is $\Gamma_{\mathfrak{a}R'}$-acyclic. These results pave the way for the proofs later in the chapter of the Independence Theorem (4.2.1) and the Flat Base Change Theorem (4.3.2).

4.1 Some acyclic modules

For completeness, we begin with the formal definition.

4.1.1 Definition. We say that an R-module A is $\Gamma_{\mathfrak{a}}$-*acyclic* precisely when $H^i_{\mathfrak{a}}(A) = 0$ for all $i > 0$.

Our presentation does not depend on the following exercise, but the reader should be aware of the result it contains.

4.1.2 Exercise. Show that, given an R-module M, its local cohomology modules with respect to $\mathfrak{a}$ can be calculated by means of a resolution of M by $\Gamma_{\mathfrak{a}}$-acyclic modules as follows. Let

$$A^\bullet : 0 \xrightarrow{d^{-1}} A^0 \xrightarrow{d^0} A^1 \longrightarrow \cdots \longrightarrow A^i \xrightarrow{d^i} A^{i+1} \longrightarrow \cdots$$

be a $\Gamma_{\mathfrak{a}}$-acyclic resolution of M, so that $A^0, A^1, \ldots, A^i, \ldots$ are all $\Gamma_{\mathfrak{a}}$-acyclic R-modules and there is an R-homomorphism $\alpha : M \to A^0$ such that the sequence

$$0 \longrightarrow M \xrightarrow{\alpha} A^0 \xrightarrow{d^0} A^1 \longrightarrow \cdots \longrightarrow A^i \xrightarrow{d^i} A^{i+1} \longrightarrow \cdots$$

is exact. Show that $H^i_{\mathfrak{a}}(M) \cong \operatorname{Ker}(\Gamma_{\mathfrak{a}}(d^i))/\operatorname{Im}(\Gamma_{\mathfrak{a}}(d^{i-1}))$ for all $i \in \mathbb{N}_0$.

We shall have two applications of our first proposition in this section.

4.1.3 Proposition. *Let M be an R-module, and let $\mathfrak{C}$ be a set of ideals of R such that*

(*a*) *$\mathfrak{C}$ is closed under the formation of finite sums and products,*
(*b*) *$0R \in \mathfrak{C}$, and*
(*c*) *each ideal in $\mathfrak{C}$ is the sum of finitely many principal ideals which belong to $\mathfrak{C}$.*

Assume that $H^1_{\mathfrak{c}}(M) = 0$ for all $\mathfrak{c} \in \mathfrak{C}$. Then M is $\Gamma_{\mathfrak{c}}$-acyclic for all $\mathfrak{c} \in \mathfrak{C}$.

Remark. Of course, if M is $\Gamma_{\mathfrak{c}}$-acyclic for all $\mathfrak{c} \in \mathfrak{C}$, then it is automatic that $H^1_{\mathfrak{c}}(M) = 0$ for all $\mathfrak{c} \in \mathfrak{C}$. Thus this theorem could be phrased as an 'if and only if' result.

Proof. Since Γ_{0R} is the identity functor on $\mathscr{C}(R)$, it is clear that M is Γ_{0R}-acyclic. Also, it was proved in 2.2.18(ii) that, for $a \in R$, we have $H^i_{Ra}(M) = 0$ for all $i \in \mathbb{N}$ with $i > 1$; hence M is $\Gamma_{\mathfrak{c}}$-acyclic whenever $\mathfrak{c}$ is a principal ideal in $\mathfrak{C}$.

Now suppose, inductively, that $t > 1$ and we have proved that, whenever $\mathfrak{c}' \in \mathfrak{C}$ can be expressed as a sum of fewer than t principal ideals which all

belong to $\mathfrak{C}$, then M is $\Gamma_{\mathfrak{c}}$-acyclic. This is certainly the case when $t = 1$. Let $\mathfrak{c} = Rc_1 + \cdots + Rc_t$ where $c_1, \ldots, c_t \in R$ and $Rc_1, \ldots, Rc_t \in \mathfrak{C}$. We shall use the *Mayer-Vietoris Sequence to show that M is also $\Gamma_{\mathfrak{c}}$-acyclic.*

Set $\mathfrak{a} = Rc_1 + \cdots + Rc_{t-1}$ and $\mathfrak{b} = Rc_t$, so that $\mathfrak{c} = \mathfrak{a} + \mathfrak{b}$. Note that $\mathfrak{b} \in \mathfrak{C}$, and, by hypothesis (a) on $\mathfrak{C}$, each of $\mathfrak{a}, \mathfrak{ab}, Rc_1c_t, \ldots, Rc_{t-1}c_t$ belongs to $\mathfrak{C}$. Since $\mathfrak{b}$ is principal, and $\mathfrak{a}$ and

$$\mathfrak{ab} = (Rc_1 + \cdots + Rc_{t-1})Rc_t = Rc_1c_t + \cdots + Rc_{t-1}c_t$$

are both expressible as sums of $t-1$ principal ideals belonging to $\mathfrak{C}$, it follows from 2.2.18(ii) and the inductive hypothesis that M is $\Gamma_{\mathfrak{a}}$-acyclic, $\Gamma_{\mathfrak{b}}$-acyclic and $\Gamma_{\mathfrak{ab}}$-acyclic.

By the Mayer-Vietoris Sequence 3.2.3, we have, for an arbitrary $i > 1$, an exact sequence

$$H^{i-1}_{\mathfrak{a}\cap\mathfrak{b}}(M) \longrightarrow H^i_{\mathfrak{c}}(M) \longrightarrow H^i_{\mathfrak{a}}(M) \oplus H^i_{\mathfrak{b}}(M).$$

Now $H^{i-1}_{\mathfrak{a}\cap\mathfrak{b}}(M) = H^{i-1}_{\mathfrak{ab}}(M)$ by 3.1.5, and so, by what we have already established, $H^{i-1}_{\mathfrak{a}\cap\mathfrak{b}}(M) = H^i_{\mathfrak{a}}(M) = H^i_{\mathfrak{b}}(M) = 0$. Thus $H^i_{\mathfrak{c}}(M) = 0$ for all $i > 1$. Since $H^1_{\mathfrak{c}}(M) = 0$ by hypothesis (because $\mathfrak{c} \in \mathfrak{C}$), this completes the inductive step.

Since each ideal in $\mathfrak{C}$ can be expressed as the sum of finitely many principal ideals which belong to $\mathfrak{C}$, the proof is complete. □

The two important applications of Proposition 4.1.3 which we have in mind concern a homomorphism of commutative Noetherian rings, and it is appropriate for us to clarify notation at this point.

4.1.4 Notation. Throughout this chapter, R' will denote a second commutative Noetherian ring and $f : R \longrightarrow R'$ will denote a ring homomorphism. As in Chapter 2, for an ideal $\mathfrak{b}$ of R, we shall use $\mathfrak{b}R'$ to denote the extension of $\mathfrak{b}$ to R' under f.

For an R-module M, we shall use $\mathrm{Zdv}_R(M)$ (or $\mathrm{Zdv}(M)$ if there is no ambiguity about the underlying ring involved) to denote the set of elements of R which are zerodivisors on M. Thus, for example, if M' is an R'-module, then $R \setminus \mathrm{Zdv}_R(M')$ denotes the set of elements of R which are non-zerodivisors on M' when the latter is regarded as an R-module by means of f.

4.1.5 Lemma. *Let M' be a finitely generated R'-module which is $\mathfrak{a}R'$-torsion-free. Then $\mathfrak{a} \nsubseteq \mathrm{Zdv}_R(M')$; in other words, $\mathfrak{a}$ contains a non-zerodivisor on M' when the latter is regarded as an R-module by means of f.*

Proof. Suppose that $\mathfrak{a} \cap (R \setminus \mathrm{Zdv}_R(M')) = \emptyset$ and look for a contradiction. Then

$$f(\mathfrak{a}) \subseteq \mathrm{Zdv}_{R'}(M') = \bigcup_{\mathfrak{P} \in \mathrm{Ass}_{R'} M'} \mathfrak{P}.$$

Since M' is a finitely generated R'-module, it follows from the Prime Avoidance Theorem in the form given in [60, 3.61] that $f(\mathfrak{a}) \subseteq \mathfrak{P}$ for some $\mathfrak{P} \in \mathrm{Ass}_{R'} M'$. Since there exists $m' \in M'$ with $(0 :_{R'} m') = \mathfrak{P}$, we deduce that $m' \in (0 :_{M'} \mathfrak{a}R')$, and $m' \neq 0$ a contradiction. □

We are now ready for the proof of one of the main results of this section.

4.1.6 Theorem. *Let I' be an injective R'-module. Then I', when viewed as an R-module by means of f, is $\Gamma_{\mathfrak{a}}$-acyclic.*

Proof. The strategy of this proof is to show first that $H^1_{\mathfrak{a}}(I') = 0$, and then appeal to Proposition 4.1.3.

By 2.2.21, there is an R-isomorphism $\varepsilon_{I'} : D_{\mathfrak{a}R'}(I') \longrightarrow D_{\mathfrak{a}}(I')$ such that the diagram

$$\begin{tikzcd} I' \arrow[r, "\eta_{\mathfrak{a}R',I'}"] \arrow[d, equal] & D_{\mathfrak{a}R'}(I') \arrow[d, "\varepsilon_{I'}", "\cong"'] \\ I' \arrow[r, "\eta_{\mathfrak{a},I'}"] & D_{\mathfrak{a}}(I') \end{tikzcd}$$

commutes. Since $H^1_{\mathfrak{a}R'}(I') = 0$, it follows from 2.2.4(i)(c) that $\eta_{\mathfrak{a}R',I'}$ is surjective. Hence $\eta_{\mathfrak{a},I'}$ is surjective, and so $H^1_{\mathfrak{a}}(I') = 0$, again by 2.2.4(i)(c).

It follows that $H^1_{\mathfrak{a}}(I') = 0$ for an *arbitrary* ideal $\mathfrak{a}$ of R. We can now apply 4.1.3 (with the set of all ideals of R as the set $\mathfrak{C}$) to deduce that I' is $\Gamma_{\mathfrak{b}}$-acyclic for every ideal $\mathfrak{b}$ of R. □

We now move on to consider the situation in which the ring homomorphism $f : R \to R'$ is flat, that is, such that R', when viewed as an R-module via f, is flat. We need two preliminary results for this situation; for the first, we appeal to [35] for a proof.

4.1.7 Lemma. (See [35, Theorem 7.11].) *Assume that the ring homomorphism $f : R \to R'$ is flat. Let M be an R-module. Then there is a natural transformation of functors*

$$\mu : \mathrm{Hom}_R(\,\cdot\,, M) \otimes_R R' \longrightarrow \mathrm{Hom}_{R'}((\,\cdot\,) \otimes_R R', M \otimes_R R')$$

(from $\mathscr{C}(R)$ to $\mathscr{C}(R')$) which is such that

(i) $\mu_N(g \otimes r') = r'(g \otimes \mathrm{Id}_{R'})$ *for each R-module N, each $r' \in R'$ and each $g \in \mathrm{Hom}_R(N, M)$, and*

(ii) μ_N *is an isomorphism if N is a finitely generated R-module.* □

4.1.8 Proposition. *Assume that the ring homomorphism $f : R \to R'$ is flat; let I be an injective R-module. Then the natural R'-homomorphism*

$$\beta : I \otimes_R R' \longrightarrow \mathrm{Hom}_{R'}(\mathfrak{a}R', I \otimes_R R')$$

(for which $\beta(m')(r') = r'm'$ for all $r' \in \mathfrak{a}R'$ and all $m' \in I \otimes_R R'$) is surjective.

Proof. Since f is flat, the natural R'-epimorphism $\gamma : \mathfrak{a} \otimes_R R' \longrightarrow \mathfrak{a}R'$ (for which $\gamma(\sum_{i=1}^t a_i \otimes r'_i) = \sum_{i=1}^t f(a_i)r'_i$ for all $t \in \mathbb{N}$, $a_1, \ldots, a_t \in \mathfrak{a}$ and $r'_1, \ldots, r'_t \in R'$) is an isomorphism (see [35, Theorem 7.7]).

Since $\mathfrak{a}$ is a finitely generated R-module, the R'-homomorphism

$$\mu_{\mathfrak{a}} : \mathrm{Hom}_R(\mathfrak{a}, I) \otimes_R R' \longrightarrow \mathrm{Hom}_{R'}(\mathfrak{a} \otimes_R R', I \otimes_R R')$$

of 4.1.7 is an isomorphism. Since I is R-injective, the R-homomorphism $\sigma : I \to \mathrm{Hom}_R(\mathfrak{a}, I)$ (for which $\sigma(m)(a) = am$ for all $a \in \mathfrak{a}$ and all $m \in I$) is surjective, so that, since tensor product is right exact,

$$\sigma \otimes \mathrm{Id}_{R'} : I \otimes_R R' \longrightarrow \mathrm{Hom}_R(\mathfrak{a}, I) \otimes_R R'$$

is an R'-epimorphism. It follows that the composition

$$\mathrm{Hom}_{R'}(\gamma^{-1}, \mathrm{Id}_{I \otimes_R R'}) \circ \mu_{\mathfrak{a}} \circ (\sigma \otimes \mathrm{Id}_{R'}) : I \otimes_R R' \longrightarrow \mathrm{Hom}_{R'}(\mathfrak{a}R', I \otimes_R R')$$

is surjective. Since this composition is just β, the proof is complete. □

We are now in a position to prove a theorem which has some similarities to Theorem 4.1.6.

4.1.9 Theorem. *Assume that the ring homomorphism $f : R \to R'$ is flat, and let I be an injective R-module. Then $I \otimes_R R'$ is $\Gamma_{\mathfrak{a}R'}$-acyclic.*

Proof. We shall employ a strategy similar to that which we used in the proof of 4.1.6: we shall show first that $H^1_{\mathfrak{a}R'}(I \otimes_R R') = 0$, and then we shall appeal to Proposition 4.1.3.

For each $n \in \mathbb{N}$, the natural R'-homomorphism

$$I \otimes_R R' \longrightarrow \mathrm{Hom}_{R'}(\mathfrak{a}^n R', I \otimes_R R')$$

of 4.1.8 is surjective, so that, since $\mathfrak{a}^n R' = (\mathfrak{a}R')^n$, the R'-homomorphism

$$\eta_{I \otimes_R R'} : I \otimes_R R' \longrightarrow D_{\mathfrak{a}R'}(I \otimes_R R') = \varinjlim_{n \in \mathbb{N}} \operatorname{Hom}_{R'}((\mathfrak{a}R')^n, I \otimes_R R')$$

of 2.2.4(i) is surjective. Hence $H^1_{\mathfrak{a}R'}(I \otimes_R R') = 0$, by 2.2.4(i)(c).

We can now apply 4.1.3 (with the set $\mathfrak{C}$ taken as the set of all ideals of R' which are extended from ideals of R) to deduce that $I \otimes_R R'$ is $\Gamma_{\mathfrak{b}R'}$-acyclic for every ideal $\mathfrak{b}$ of R. □

Theorems 4.1.6 and 4.1.9 pave the way for us to present, in the next two sections, the two main results of this chapter.

4.2 The Independence Theorem

In this section, we prove the Independence Theorem, which shows, loosely speaking, that local cohomology is 'independent of the base ring'. We have already seen results of a similar type for ideal transforms in 2.2.21, and for first local cohomology modules in Exercise 2.2.23. Let us again use $\lceil_R : \mathscr{C}(R') \to \mathscr{C}(R)$ to denote the functor obtained from restriction of scalars (using f): thus, if M' is an R'-module and $i \in \mathbb{N}_0$, we can form the R-modules $H^i_{\mathfrak{a}R'}(M')\lceil_R$ and $H^i_{\mathfrak{a}}(M'\lceil_R)$. For the first, we form the i-th local cohomology module of M' with respect to $\mathfrak{a}R'$ and then regard the resulting R'-module as an R-module by means of f; for the second, we first consider M' as an R-module via f, and then take the i-th local cohomology module with respect to $\mathfrak{a}$. Theorem 4.2.1 below shows, among other things, that there is an R-isomorphism

$$H^i_{\mathfrak{a}R'}(M') = H^i_{\mathfrak{a}R'}(M')\lceil_R \xrightarrow{\cong} H^i_{\mathfrak{a}}(M'\lceil_R) =: H^i_{\mathfrak{a}}(M'),$$

so that, speaking loosely, it doesn't matter whether we calculate these local cohomology modules over R or R'.

4.2.1 Independence Theorem. *The functors $\Gamma_{\mathfrak{a}R'}(\,\cdot\,)\lceil_R$ and $\Gamma_{\mathfrak{a}}(\,\cdot\,\lceil_R)$ (from $\mathscr{C}(R')$ to $\mathscr{C}(R)$) are the same, and there is a unique isomorphism*

$$\Lambda = (\lambda^i)_{i \in \mathbb{N}_0} : \left(H^i_{\mathfrak{a}R'}(\,\cdot\,)\lceil_R\right)_{i \in \mathbb{N}_0} \xrightarrow{\cong} \left(H^i_{\mathfrak{a}}(\,\cdot\,\lceil_R)\right)_{i \in \mathbb{N}_0}$$

of negative (strongly) connected sequences of covariant functors (from $\mathscr{C}(R')$ to $\mathscr{C}(R)$) such that λ^0 is the identity natural equivalence. In particular, for each $i \in \mathbb{N}_0$, the functors $H^i_{\mathfrak{a}R'}(\,\cdot\,)\lceil_R$ and $H^i_{\mathfrak{a}}(\,\cdot\,\lceil_R)$ are naturally equivalent.

Proof. Since $\lceil_R : \mathscr{C}(R') \to \mathscr{C}(R)$ is covariant and exact, it is clear that

$$(H^i_{\mathfrak{a}R'}(\,\cdot\,)\lceil_R)_{i \in \mathbb{N}_0} \quad \text{and} \quad (H^i_{\mathfrak{a}}(\,\cdot\,\lceil_R))_{i \in \mathbb{N}_0}$$

are negative strongly connected sequences of covariant functors from $\mathscr{C}(R')$ to $\mathscr{C}(R)$.

Now $\mathfrak{a}^n R' = (\mathfrak{a}R')^n$ for all $n \in \mathbb{N}$, and so $\Gamma_{\mathfrak{a}R'}(\cdot)\lceil_R$ and $\Gamma_{\mathfrak{a}}(\cdot\lceil_R)$ are the same functor. Furthermore, whenever I' is an injective R'-module, it is, of course, automatic that $H^i_{\mathfrak{a}R'}(I') = 0$ for all $i \in \mathbb{N}$, while it follows from 4.1.6 that $H^i_{\mathfrak{a}}(I') = 0$ for all $i \in \mathbb{N}$. The result now follows immediately on application of 1.3.4(ii). □

Remark. Some readers might prefer to approach the final claim of 4.2.1 in the following way. Observe first that $\Gamma_{\mathfrak{a}R'}(\cdot)\lceil_R$ and $\Gamma_{\mathfrak{a}}(\cdot\lceil_R)$ are the same functor. Let M' be an R'-module, and let

$$I'^{\bullet} : 0 \longrightarrow I'^0 \longrightarrow I'^1 \longrightarrow \cdots \longrightarrow I'^i \longrightarrow I'^{i+1} \longrightarrow \cdots$$

be an injective resolution of M' over R'. By 1.2.2, the i-th cohomology module of the complex $\Gamma_{\mathfrak{a}R'}(I'^{\bullet})$ is isomorphic to $H^i_{\mathfrak{a}R'}(M')$ (for $i \in \mathbb{N}_0$).

By 4.1.6, the complex

$$I'^{\bullet}\lceil_R : 0 \longrightarrow I'^0\lceil_R \longrightarrow I'^1\lceil_R \longrightarrow \cdots \longrightarrow I'^i\lceil_R \longrightarrow I'^{i+1}\lceil_R \longrightarrow \cdots$$

is a resolution of $M'\lceil_R$ by $\Gamma_{\mathfrak{a}}$-acyclic R-modules, and so, by 4.1.2, the i-th cohomology module of the complex $\Gamma_{\mathfrak{a}}(I'^{\bullet}\lceil_R)$ is isomorphic to $H^i_{\mathfrak{a}}(M'\lceil_R)$ (for $i \in \mathbb{N}_0$). Since $\Gamma_{\mathfrak{a}R'}(\cdot)\lceil_R = \Gamma_{\mathfrak{a}}(\cdot\lceil_R)$, this gives a quick and relatively transparent proof that $H^i_{\mathfrak{a}R'}(M')\lceil_R \cong H^i_{\mathfrak{a}}(M'\lceil_R)$ for $i \in \mathbb{N}_0$. Note, however, that our use of 1.3.4 in the above proof of 4.2.1 led rather rapidly to additional information.

4.2.2 Example. Suppose that the R-module M is annihilated by the ideal $\mathfrak{b}$ of R. Then, since M is $\mathfrak{b}$-torsion, it is immediate from Exercise 2.1.9 that $H^i_{\mathfrak{a}}(M) \cong H^i_{\mathfrak{a}+\mathfrak{b}}(M)$ for all $i \in \mathbb{N}_0$. However, the reader might find the following alternative approach, which uses the Independence Theorem 4.2.1, illuminating.

Since M is annihilated by $\mathfrak{b}$, we can regard M as a module over $R/\mathfrak{b}$ in a natural way. Let $i \in \mathbb{N}_0$. By the Independence Theorem 4.2.1, there is an R-isomorphism $H^i_{\mathfrak{a}}(M) \cong H^i_{\mathfrak{a}(R/\mathfrak{b})}(M)$. But $\mathfrak{a}(R/\mathfrak{b}) = (\mathfrak{a} + \mathfrak{b})/\mathfrak{b}$, and another use of the Independence Theorem 4.2.1 provides us with an R-isomorphism $H^i_{(\mathfrak{a}+\mathfrak{b})/\mathfrak{b}}(M) \cong H^i_{\mathfrak{a}+\mathfrak{b}}(M)$, so that $H^i_{\mathfrak{a}}(M) \cong H^i_{\mathfrak{a}+\mathfrak{b}}(M)$, as claimed.

4.2.3 Exercise. Let $n \in \mathbb{N}$. This exercise is concerned with the ring $R[X_1, \ldots, X_n]$ of polynomials over R.

(i) Use 2.2.18 to show that the $R[X_1]$-module $H^1_{(X_1)}(R[X_1])$ is not finitely generated, and therefore non-zero.

(ii) Use 1.3.9(iv) to show that, when $n > 1$,

$$H^{n-1}_{(X_1,\ldots,X_n)}(R[X_1, \ldots, X_n]) = 0.$$

(iii) The ring homomorphism $\nu : R[X_1, \ldots, X_n] \to R[X_1, \ldots, X_{n-1}]$ (again for $n > 1$) obtained by evaluation at $X_1, \ldots, X_{n-1}, 0$ allows us to regard $R[X_1, \ldots, X_{n-1}]$ as an $R[X_1, \ldots, X_n]$-module. Show that, when this is done,

$$H^n_{(X_1,\ldots,X_n)}(R[X_1, \ldots, X_{n-1}]) = 0.$$

(iv) Assume again that $n > 1$. Deduce from the exact sequence

$$0 \longrightarrow R[X_1, \ldots, X_n] \xrightarrow{X_n} R[X_1, \ldots, X_n] \xrightarrow{\nu} R[X_1, \ldots, X_{n-1}] \longrightarrow 0$$

of $R[X_1, \ldots, X_n]$-modules that $H^n_{(X_1,\ldots,X_n)}(R[X_1, \ldots, X_n])$ has a submodule isomorphic to $H^{n-1}_{(X_1,\ldots,X_{n-1})}(R[X_1, \ldots, X_{n-1}])$ (the latter being regarded as an $R[X_1, \ldots, X_n]$-module by means of ν), and that

$$H^n_{(X_1,\ldots,X_n)}(R[X_1, \ldots, X_n]) = X_n H^n_{(X_1,\ldots,X_n)}(R[X_1, \ldots, X_n]).$$

(v) Prove by induction that, for all $n \in \mathbb{N}$, the $R[X_1, \ldots, X_n]$-module $H^n_{(X_1,\ldots,X_n)}(R[X_1, \ldots, X_n])$ is not finitely generated, and therefore non-zero.

4.2.4 Exercise. Use 4.2.3 to show that, over the ring $R[X_1, X_2, X_3, X_4]$ of polynomials in four indeterminates with coefficients in R,

$$H^3_{(X_1,X_2)\cap(X_3,X_4)}(R[X_1, X_2, X_3, X_4]) \neq 0.$$

Deduce that the affine algebraic set W in $\mathbb{A}^4$ defined by

$$W := V_{\mathbb{A}^4}(X_1,\ X_2) \cup V_{\mathbb{A}^4}(X_3,\ X_4)$$

cannot be 'defined by two equations', that is, there do not exist $f, g \in \mathbb{C}[X_1, X_2, X_3, X_4]$ such that $W = \{p \in \mathbb{A}^4 : f(p) = g(p) = 0\}$.

We are now going to use the Independence Theorem to prove a proposition which presents a non-vanishing result for certain local cohomology modules. We shall use this proposition in Chapter 6 to prove a more general non-vanishing result. The strategy of the proof of the proposition has some similarities with the strategy used in Exercise 4.2.3.

4.2.5 Proposition. *Suppose that $(R, \mathfrak{m})$ is a regular local ring of dimension $d > 0$. Then the R-module $H^d_{\mathfrak{m}}(R)$ is not finitely generated, and therefore non-zero.*

Proof. We argue by induction on d. When $d = 1$, the maximal ideal $\mathfrak{m}$ is generated by one element, π say. Let K denote the field of fractions of R. Apply 2.2.15 (in the case where $M = R$ and S is the set of non-zero elements of R), and note that $\bigcup_{n\in\mathbb{N}}(R :_K \pi^n) = K$: it follows from this and 2.2.4(i)(c) that there

is an exact sequence

$$0 \longrightarrow R \longrightarrow K \longrightarrow H^1_{R\pi}(R) \longrightarrow 0.$$

Since R is finitely generated as an R-module but K is not, we deduce that $H^1_{R\pi}(R)$ is not finitely generated.

Now suppose, inductively, that $d > 1$ and that the result has been proved for regular local rings of smaller (positive) dimensions. Let $u_1, \ldots, u_d$ be d elements of $\mathfrak{m}$ which generate this maximal ideal. Let $\overline{R} := R/u_dR$, a regular local ring of dimension $d-1$ with maximal ideal $\overline{\mathfrak{m}} := \mathfrak{m}/u_dR$. By the inductive hypothesis, the $\overline{R}$-module $H^{d-1}_{\overline{\mathfrak{m}}}(\overline{R})$ is not finitely generated. Hence, by the Independence Theorem 4.2.1, the R-module $H^{d-1}_{\mathfrak{m}}(R/u_dR)$ is not finitely generated. The exact sequence

$$0 \longrightarrow R \xrightarrow{u_d} R \longrightarrow R/u_dR \longrightarrow 0$$

induces an exact sequence $H^{d-1}_{\mathfrak{m}}(R) \longrightarrow H^{d-1}_{\mathfrak{m}}(R/u_dR) \longrightarrow H^d_{\mathfrak{m}}(R)$. But $H^{d-1}_{\mathfrak{m}}(R) = 0$ by 1.3.9(iv) since $u_1, \ldots, u_d$ is an R-sequence. Hence $H^d_{\mathfrak{m}}(R)$ has a submodule isomorphic to $H^{d-1}_{\mathfrak{m}}(R/u_dR)$; since the latter is not finitely generated, neither is $H^d_{\mathfrak{m}}(R)$. □

4.2.6 Exercise. Assume that R contains a field K as a subring. Suppose that $\mathfrak{a}$ can be generated by t elements $a_1, \ldots, a_t$. The ring homomorphism $f : K[X_1, \ldots, X_t] \longrightarrow R$ obtained by evaluation at $a_1, \ldots, a_t$ allows us to regard each R-module as a module over $K[X_1, \ldots, X_t]$.

Show that, for an R-module M, there is a $K[X_1, \ldots, X_t]$-isomorphism

$$H^i_{(X_1,\ldots,X_t)}(M) \cong H^i_{\mathfrak{a}}(M) \qquad \text{for each } i \in \mathbb{N}_0.$$

Use the fact that the ring $K[X_1, \ldots, X_t]$ has global dimension t to show that $H^i_{\mathfrak{a}}(M) = 0$ for all $i > t$. Compare this with Theorem 3.3.1.

4.2.7 Exercise. (In this exercise, there is no assumption about R beyond the standard ones.) Suppose that $\mathfrak{a}$ can be generated by t elements. Use an appropriate ring homomorphism $\mathbb{Z}[X_1, \ldots, X_t] \longrightarrow R$ in conjunction with the Independence Theorem 4.2.1 and the fact that the global dimension of $\mathbb{Z}[X_1, \ldots, X_t]$ is $t+1$ to show that $H^i_{\mathfrak{a}}(M) = 0$ for all $i > t+1$. Compare this with Theorem 3.3.1.

The following refinement of the Independence Theorem 4.2.1 is occasionally useful.

4.2.8 Exercise. Let the situation be as in the Independence Theorem 4.2.1. Let M' be an R'-module. Show that, for each $i \in \mathbb{N}_0$, the R-module $H^i_{\mathfrak{a}}(M')$ actually

has a natural structure as an R'-module under which $r'x = H^i_{\mathfrak{a}}(r' \operatorname{Id}_{M'})(x)$ for all $r' \in R'$ and $x \in H^i_{\mathfrak{a}}(M')$. Show further that, if $f' : M' \longrightarrow N'$ is a homomorphism of R'-modules, then $H^i_{\mathfrak{a}}(f') : H^i_{\mathfrak{a}}(M') \longrightarrow H^i_{\mathfrak{a}}(N')$ is an R'-homomorphism.

Deduce that $(H^i_{\mathfrak{a}}(\,\cdot\, \lceil_R))_{i\in\mathbb{N}_0}$ is a negative strongly connected sequence of covariant functors from $\mathscr{C}(R')$ to *itself*, and, as such, is isomorphic to $(H^i_{\mathfrak{a}R'})_{i\in\mathbb{N}_0}$.

4.3 The Flat Base Change Theorem

The second fundamental result about local cohomology that we propose to derive from the work in Section 4.1 is the Flat Base Change Theorem. This result is a consequence of Theorem 4.1.9 and concerns the situation in which $f : R \to R'$ is flat: we are going to show that, in this situation, speaking loosely, the formation of local cohomology 'commutes' with 'extension of the base ring from R to R''. To be more precise, we shall show that, for each R-module M and each $i \in \mathbb{N}_0$, there is an R'-isomorphism $H^i_{\mathfrak{a}R'}(M \otimes_R R') \xrightarrow{\cong} H^i_{\mathfrak{a}}(M) \otimes_R R'$. Although our proof of this result has some similarities with our proof of 4.2.1 above, a preparatory lemma will be helpful in this case.

4.3.1 Lemma. *Assume that the ring homomorphism $f : R \to R'$ is flat. There is a natural equivalence of functors*

$$\rho^0 : \Gamma_{\mathfrak{a}}(\,\cdot\,) \otimes_R R' \longrightarrow \Gamma_{\mathfrak{a}R'}((\,\cdot\,) \otimes_R R')$$

from $\mathscr{C}(R)$ to $\mathscr{C}(R')$ which is such that, for each R-module M, we have $\rho^0_M(m \otimes r') = m \otimes r'$ for all $m \in \Gamma_{\mathfrak{a}}(M)$ and all $r' \in R'$.

Proof. Let M be an R-module. Since f is flat, the inclusion map induces an R'-monomorphism $\Gamma_{\mathfrak{a}}(M) \otimes_R R' \to M \otimes_R R'$ whose image is contained in $\Gamma_{\mathfrak{a}R'}(M \otimes_R R')$. It follows easily that there is a natural transformation of functors $\rho^0 : \Gamma_{\mathfrak{a}}(\,\cdot\,) \otimes_R R' \longrightarrow \Gamma_{\mathfrak{a}R'}((\,\cdot\,) \otimes_R R')$ which is such that, for each R-module M, ρ^0_M is monomorphic and satisfies

$$\rho^0_M\left(\textstyle\sum_{i=1}^t m_i \otimes r'_i\right) = \textstyle\sum_{i=1}^t m_i \otimes r'_i$$

for all $t \in \mathbb{N}$, $m_1, \ldots, m_t \in \Gamma_{\mathfrak{a}}(M)$ and $r'_1, \ldots, r'_t \in R'$. It remains to show that ρ^0_M is surjective for each R-module M.

We can deduce this from Lemma 4.1.7 as follows. Let $n \in \mathbb{N}$. Since $R/\mathfrak{a}^n$ is a finitely generated R-module, Lemma 4.1.7 provides us with an R'-isomorphism

$$\mu_{R/\mathfrak{a}^n} : \operatorname{Hom}_R(R/\mathfrak{a}^n, M) \otimes_R R' \xrightarrow{\cong} \operatorname{Hom}_{R'}((R/\mathfrak{a}^n) \otimes_R R', M \otimes_R R')$$

such that $\mu_{R/\mathfrak{a}^n}(h \otimes r') = r'(h \otimes \mathrm{Id}_{R'})$ for all $h \in \mathrm{Hom}_R(R/\mathfrak{a}^n, M)$ and all $r' \in R'$. We can incorporate $\mu_{R/\mathfrak{a}^n}$ into the composition

$$\begin{aligned}(0 :_M \mathfrak{a}^n) \otimes_R R' &\xrightarrow{\cong} \mathrm{Hom}_R(R/\mathfrak{a}^n, M) \otimes_R R' \\ &\xrightarrow{\mu_{R/\mathfrak{a}^n}} \mathrm{Hom}_{R'}((R/\mathfrak{a}^n) \otimes_R R', M \otimes_R R') \\ &\xrightarrow{\cong} \mathrm{Hom}_{R'}(R'/\mathfrak{a}^n R', M \otimes_R R') \xrightarrow{\cong} (0 :_{M \otimes_R R'} (\mathfrak{a}R')^n)\end{aligned}$$

of R'-isomorphisms, in which the other three isomorphisms are the obvious natural ones. The reader can easily check that this composition ε is such that $\varepsilon(\sum_{i=1}^t m_i \otimes r'_i) = \sum_{i=1}^t m_i \otimes r'_i$ (for $t \in \mathbb{N}$, $m_1, \ldots, m_t \in (0 :_M \mathfrak{a}^n)$ and $r'_1, \ldots, r'_t \in R'$). It is now an immediate consequence that ρ^0_M is surjective. □

4.3.2 Flat Base Change Theorem. *Assume that the ring homomorphism $f : R \longrightarrow R'$ is flat. There is a unique isomorphism*

$$(\rho^i)_{i \in \mathbb{N}_0} : (H^i_{\mathfrak{a}}(\,\cdot\,) \otimes_R R')_{i \in \mathbb{N}_0} \xrightarrow{\cong} (H^i_{\mathfrak{a}R'}((\,\cdot\,) \otimes_R R'))_{i \in \mathbb{N}_0}$$

of negative (strongly) connected sequences of covariant functors (from $\mathscr{C}(R)$ to $\mathscr{C}(R')$) which extends the natural equivalence ρ^0 of 4.3.1. *In particular, for each $i \in \mathbb{N}_0$, the functors $H^i_{\mathfrak{a}}(\,\cdot\,) \otimes_R R'$ and $H^i_{\mathfrak{a}R'}((\,\cdot\,) \otimes_R R')$ are naturally equivalent.*

Proof. As in the proof of 4.2.1, we use 1.3.4. Since $(\,\cdot\,) \otimes_R R' : \mathscr{C}(R) \longrightarrow \mathscr{C}(R')$ is exact, it is clear that the two sequences given in the statement of 4.3.2 are indeed negative strongly connected sequences of covariant functors from $\mathscr{C}(R)$ to $\mathscr{C}(R')$. Furthermore, whenever I is an injective R-module, it is, of course, automatic that $H^i_{\mathfrak{a}}(I) = 0$ for all $i \in \mathbb{N}$, while it follows from 4.1.9 that $H^i_{\mathfrak{a}R'}(I \otimes_R R') = 0$ for all $i \in \mathbb{N}$. The result is now an immediate consequence of 4.3.1 and 1.3.4(ii). □

Remark. Again, some readers might prefer the following direct approach to the final claim of 4.3.2. Let M be an R-module, and let

$$I^\bullet : 0 \longrightarrow I^0 \longrightarrow I^1 \longrightarrow \cdots \longrightarrow I^i \longrightarrow I^{i+1} \longrightarrow \cdots$$

be an injective resolution of M over R. For $i \in \mathbb{N}_0$, the i-th cohomology module of the complex $\Gamma_{\mathfrak{a}}(I^\bullet)$ is, of course, $H^i_{\mathfrak{a}}(M)$. Since $(\,\cdot\,) \otimes_R R' : \mathscr{C}(R) \longrightarrow \mathscr{C}(R')$ is additive and exact, we have an R'-isomorphism

$$H^i_{\mathfrak{a}}(M) \otimes_R R' = H^i(\Gamma_{\mathfrak{a}}(I^\bullet)) \otimes_R R' \cong H^i(\Gamma_{\mathfrak{a}}(I^\bullet) \otimes_R R').$$

In view of the natural equivalence of 4.3.1, there is an R'-isomorphism

$$H^i(\Gamma_{\mathfrak{a}}(I^\bullet) \otimes_R R') \cong H^i(\Gamma_{\mathfrak{a}R'}(I^\bullet \otimes_R R')).$$

But, by 4.1.9, the complex $I^\bullet \otimes_R R'$ is a $\Gamma_{\mathfrak{a}R'}$-acyclic resolution of the R'-module $M \otimes_R R'$, and so, by 4.1.2, there is an R'-isomorphism

$$H^i(\Gamma_{\mathfrak{a}R'}(I^\bullet \otimes_R R')) \cong H^i_{\mathfrak{a}R'}(M \otimes_R R').$$

This gives us, fairly directly, an R'-isomorphism

$$H^i_{\mathfrak{a}}(M) \otimes_R R' \cong H^i_{\mathfrak{a}R'}(M \otimes_R R').$$

Note again, however, that our use of 1.3.4 in the above proof of 4.3.2 led very quickly to additional information.

If S is a multiplicatively closed subset of R, then, as is very well known, the natural ring homomorphism $R \to S^{-1}R$ is flat. Thus we can obtain the result of Exercise 1.3.6 as a special case of the Flat Base Change Theorem 4.3.2.

4.3.3 Corollary. *Let S be a multiplicatively closed subset of R. The sequences*

$$\left(S^{-1}(H^i_{\mathfrak{a}}(\,\cdot\,))\right)_{i\in\mathbb{N}_0} \quad \textit{and} \quad \left(H^i_{\mathfrak{a}S^{-1}R}(S^{-1}(\,\cdot\,))\right)_{i\in\mathbb{N}_0}$$

are isomorphic connected sequences of functors (from $\mathscr{C}(R)$ to $\mathscr{C}(S^{-1}R)$). In particular, for each $i \in \mathbb{N}_0$ and each R-module M, there is an $S^{-1}R$-isomorphism

$$S^{-1}(H^i_{\mathfrak{a}}(M)) \cong H^i_{\mathfrak{a}S^{-1}R}(S^{-1}M). \ \square$$

4.3.4 Exercise. Suppose that R is regular, that is, $R_{\mathfrak{p}}$ is a regular local ring for every $\mathfrak{p} \in \operatorname{Spec}(R)$.

Suppose that $\mathfrak{a}$ is proper and has height t, where $t > 0$. Show that the R-module $H^t_{\mathfrak{a}}(R)$ is not finitely generated, and therefore non-zero.

The first part of the next exercise is for those readers who have reached this point without needing the fact that, for an arbitrary R-module N, the functor $(\,\cdot\,) \otimes_R N : \mathscr{C}(R) \longrightarrow \mathscr{C}(R)$ commutes with direct limits!

4.3.5 ♯Exercise. Let N be an R-module.

(i) Show that the functor $(\,\cdot\,) \otimes_R N : \mathscr{C}(R) \longrightarrow \mathscr{C}(R)$ commutes with direct limits (see 3.4.1).

(ii) Assume that the ring homomorphism $f : R \to R'$ is flat. Show that there is a natural equivalence of functors

$$\varepsilon' : D_{\mathfrak{a}}(\,\cdot\,) \otimes_R R' \longrightarrow D_{\mathfrak{a}R'}((\,\cdot\,) \otimes_R R')$$

(from $\mathscr{C}(R)$ to $\mathscr{C}(R')$) which is such that, for each R-module M, the diagram

$$\begin{tikzcd} M \otimes_R R' \arrow[r, "\eta_{\mathfrak{a},M}\otimes_R R'"] \arrow[d, equal] & D_{\mathfrak{a}}(M) \otimes_R R' \arrow[d, "\varepsilon'_M"] \\ M \otimes_R R' \arrow[r, "\eta_{\mathfrak{a}R',M\otimes_R R'}"] & D_{\mathfrak{a}R'}(M \otimes_R R') \end{tikzcd}$$

commutes. (The notations $\eta_{\mathfrak{a},M}$ and $\eta_{\mathfrak{a}R',M\otimes_R R'}$ are explained in 2.2.4(i).)

(iii) Deduce that, for a multiplicatively closed subset S of R, the functors

$$S^{-1}(D_{\mathfrak{a}}(\,\cdot\,)) \qquad \text{and} \qquad D_{\mathfrak{a}S^{-1}R}(S^{-1}(\,\cdot\,))$$

(from $\mathscr{C}(R)$ to $\mathscr{C}(S^{-1}R)$) are naturally equivalent.

We shall end this chapter with a geometric example and exercise; the following remark will be useful.

4.3.6 Remark. Let $r_1, r_2 \in R$. Then

$$\begin{aligned} &\{\mathfrak{p} \in \operatorname{Spec}(R) \ : \ \mathfrak{p} \supseteq r_1 r_2 R + \mathfrak{a}\} \\ &\qquad = \left\{\mathfrak{p} \in \operatorname{Spec}(R) : \mathfrak{p} \supseteq \sqrt{(r_1 R + \mathfrak{a})} \cap \sqrt{(r_2 R + \mathfrak{a})}\right\}, \end{aligned}$$

and so $\sqrt{(r_1 r_2 R + \mathfrak{a})} = \sqrt{(r_1 R + \mathfrak{a})} \cap \sqrt{(r_2 R + \mathfrak{a})}$.

4.3.7 Hartshorne's Example revisited. This example concerns the affine variety V in $\mathbb{A}^4$ studied in 2.3.7 and 3.3.4 and given by

$$V := V_{\mathbb{A}^4}(X_1X_4 - X_2X_3,\ X_1^2X_3 + X_1X_2 - X_2^2,\ X_3^3 + X_3X_4 - X_4^2).$$

In 3.3.4 we showed that the subvariety

$$L := V_{\mathbb{A}^4}(X_2, X_3, X_4) = \{(c, 0, 0, 0) \in \mathbb{A}^4 : c \in \mathbb{C}\}$$

of V (a line) cannot be 'defined by one equation'; here, we shall show that V itself cannot be 'defined by two equations'.

Write, for convenience, $R := \mathbb{C}[X_1, X_2, X_3, X_4]$, and let $\mathfrak{c}$ be the ideal of R given by

$$\mathfrak{c} = (X_1X_4 - X_2X_3,\ X_1^2X_3 + X_1X_2 - X_2^2,\ X_3^3 + X_3X_4 - X_4^2).$$

We wish to show that $\operatorname{ara}(\mathfrak{c}) > 2$, and we shall achieve this by showing that $H^3_{\mathfrak{c}}(R) \neq 0$ and then appealing to 3.3.3. Let $\widehat{R} := \mathbb{C}[[X_1, X_2, X_3, X_4]]$; since the natural ring homomorphism $R \to \widehat{R}$ is flat, it follows from the Flat Base Change Theorem 4.3.2 that $H^3_{\mathfrak{c}}(R) \otimes_R \widehat{R} \cong H^3_{\mathfrak{c}\widehat{R}}(\widehat{R})$, and so it will be enough, in

order to achieve our aim, for us to show that $H^3_{\mathfrak{c}\widehat{R}}(\widehat{R}) \neq 0$. This is what we shall do.

Let $u \in \widehat{R}$ be given by

$$u := 1 + 2X_3 - 2X_3^2 + 4X_3^3 - 10X_3^4 + \cdots + \frac{(-1)^{n-1}2(2n-2)!}{n!(n-1)!}X_3^n + \cdots.$$

In fact, $u^2 = 1 + 4X_3$; note that, since the latter is a unit in $\widehat{R}$ (by [60, 1.43]), so too is u. Write

$$f_1 := X_1X_4 - X_2X_3, \qquad f_2 := X_1^2X_3 + X_1X_2 - X_2^2, \qquad f_3 := X_3^3 + X_3X_4 - X_4^2,$$

so that $\mathfrak{c}\widehat{R} = (f_1, f_2, f_3)\widehat{R}$. Now

$$\begin{aligned} 4f_2 &= 4X_1^2X_3 + X_1^2 - (4X_2^2 - 4X_1X_2 + X_1^2) \\ &= X_1^2u^2 - (2X_2 - X_1)^2 \\ &= (X_1u + 2X_2 - X_1)(X_1u - 2X_2 + X_1) \\ &= (X_1(u-1) + 2X_2)(X_1(u+1) - 2X_2). \end{aligned}$$

A similar calculation shows that

$$\begin{aligned} 4f_3 &= 4X_3^3 + X_3^2 - (4X_4^2 - 4X_3X_4 + X_3^2) \\ &= (X_3(u-1) + 2X_4)(X_3(u+1) - 2X_4). \end{aligned}$$

Set

$$g_1 := X_1(u-1) + 2X_2, \qquad g_2 := X_1(u+1) - 2X_2,$$

$$h_1 := X_3(u-1) + 2X_4, \qquad h_2 := X_3(u+1) - 2X_4.$$

Note that

$$\begin{aligned} h_1g_2 - h_2g_1 &= X_1(u+1)2X_4 - X_3(u-1)2X_2 \\ &\qquad - 2X_2X_3(u+1) + 2X_4X_1(u-1) \\ &= 4u(X_1X_4 - X_2X_3) = 4uf_1, \end{aligned}$$

so that $f_1 = u^{-1}(h_1g_2 - h_2g_1)/4$.

Therefore, on use of 4.3.6, we have

$$\begin{aligned} \sqrt{\mathfrak{c}\widehat{R}} &= \sqrt{(f_1, f_2, f_3)\widehat{R}} = \sqrt{(f_1, g_1g_2, h_1h_2)\widehat{R}} \\ &= \sqrt{(f_1, g_1, h_1h_2)\widehat{R}} \cap \sqrt{(f_1, g_2, h_1h_2)\widehat{R}} \\ &= \sqrt{(f_1, g_1, h_1)\widehat{R}} \cap \sqrt{(f_1, g_1, h_2)\widehat{R}} \cap \sqrt{(f_1, g_2, h_1)\widehat{R}} \cap \sqrt{(f_1, g_2, h_2)\widehat{R}}. \end{aligned}$$

We now use the equation $f_1 = u^{-1}(h_1g_2 - h_2g_1)/4$ to see that $(f_1, g_1, h_1)\widehat{R} = (g_1, h_1)\widehat{R}$ and $(f_1, g_2, h_2)\widehat{R} = (g_2, h_2)\widehat{R}$; the same equation and 4.3.6 show that

$$\sqrt{(f_1, g_1, h_2)\widehat{R}} = \sqrt{(h_1g_2, g_1, h_2)\widehat{R}} = \sqrt{(h_1, g_1, h_2)\widehat{R}} \cap \sqrt{(g_2, g_1, h_2)\widehat{R}}$$

and

$$\sqrt{(f_1, g_2, h_1)\widehat{R}} = \sqrt{(h_2, g_2, h_1)\widehat{R}} \cap \sqrt{(g_1, g_2, h_1)\widehat{R}}.$$

Now put all this information together to see that

$$\sqrt{\mathfrak{c}\widehat{R}} = \sqrt{(g_1, h_1)\widehat{R}} \cap \sqrt{(g_2, h_2)\widehat{R}}.$$

Next, note that, since u is a unit of $\widehat{R}$, the four elements g_1, g_2, h_1, h_2 generate the maximal ideal $(X_1, X_2, X_3, X_4)\widehat{R}$ of the 4-dimensional regular local ring $\widehat{R}$, and so, by [60, 15.38] for example, $\mathfrak{p} := (g_1, h_1)\widehat{R}$ and $\mathfrak{q} := (g_2, h_2)\widehat{R}$ are prime ideals of $\widehat{R}$. Thus we have the interesting situation where, although $\sqrt{\mathfrak{c}}$ is, by 2.3.7, a prime ideal of R, the ideal $\sqrt{\mathfrak{c}\widehat{R}}$ of $\widehat{R}$ is the intersection of two distinct prime ideals of height 2.

Note that $\mathfrak{p} + \mathfrak{q} = \widehat{\mathfrak{m}} := (X_1, X_2, X_3, X_4)\widehat{R}$, the maximal ideal of $\widehat{R}$. Since X_1, X_2, X_3, X_4 is an $\widehat{R}$-sequence in $\widehat{\mathfrak{m}}$, it follows from 1.3.9(iv) that $H^3_{\mathfrak{p}+\mathfrak{q}}(\widehat{R}) = 0$. However, Proposition 4.2.5 shows that $H^4_{\mathfrak{p}+\mathfrak{q}}(\widehat{R}) \neq 0$. By 3.3.1, we have $H^i_{\mathfrak{p}}(\widehat{R}) \oplus H^i_{\mathfrak{q}}(\widehat{R}) = 0$ for all $i > 2$. It therefore follows from 4.3.2, 1.2.3 and the Mayer-Vietoris Sequence 3.2.3 that

$$H^3_{\mathfrak{c}}(R) \otimes_R \widehat{R} \cong H^3_{\mathfrak{c}\widehat{R}}(\widehat{R}) = H^3_{\mathfrak{p}\cap\mathfrak{q}}(\widehat{R}) \cong H^4_{\widehat{\mathfrak{m}}}(\widehat{R}) \neq 0.$$

Hence $H^3_{\mathfrak{c}}(R) \neq 0$, and so $\operatorname{ara}(\mathfrak{c}) > 2$ by 3.3.3. Therefore V cannot be 'defined by two equations'.

4.3.8 Exercise. Let K be a field of characteristic 0, and let R denote the ring $K[X_1, X_2, X_3, X_4]$; let $\mathfrak{c}$ be the ideal of R given by

$$\mathfrak{c} = (X_1^2 + X_1^3 - X_2^2,\ X_3^2 + X_1X_3^2 - X_4^2,\ X_2X_3 - X_1X_4).$$

Let $\widehat{R} := K[[X_1, X_2, X_3, X_4]]$ and let $u \in \widehat{R}$ be given by

$$u := 1 + \frac{1}{2}X_1 - \frac{1}{8}X_1^2 + \frac{1}{16}X_1^3 - \frac{5}{128}X_1^4 + \cdots + \frac{(-1)^{n-1}2(2n-2)!}{4^n n!(n-1)!}X_1^n + \cdots,$$

so that $u^2 = 1 + X_1$. Let $z_1 := X_1u - X_2$, $z_2 := X_3u - X_4$, $z_3 := X_1u + X_2$ and $z_4 := X_3u + X_4$.

(i) Show that z_1, z_2, z_3, z_4 generate the maximal ideal of $\widehat{R}$.

(ii) Show that, in $\widehat{R}$,

$$X_2X_3 - X_1X_4 = X_1z_2 - X_3z_1 = X_3z_3 - X_1z_4$$

and $2u(X_2X_3 - X_1X_4) = z_2z_3 - z_1z_4$. Deduce that

$$\sqrt{\mathfrak{c}\widehat{R}} = (z_1, z_2)\widehat{R} \cap (z_3, z_4)\widehat{R}.$$

(iii) Prove that $H^3_{\mathfrak{c}}(R) \neq 0$.

4.3.9 Exercise. With the notation of 2.3.1, let V be the affine algebraic set in $\mathbb{A}^4$ given by

$$V := V_{\mathbb{A}^4}(X_1^2 + X_1^3 - X_2^2,\ X_3^2 + X_1X_3^2 - X_4^2,\ X_2X_3 - X_1X_4).$$

(i) By considering the morphism of varieties $\alpha : \mathbb{A}^2 \to \mathbb{A}^4$ for which $\alpha((c,d)) = (c^2 - 1, c^3 - c, d, cd)$ for all $(c,d) \in \mathbb{A}^2$ and the mapping

$$\beta : V \setminus \{(0,0,0,0)\} \longrightarrow \mathbb{A}^2 \setminus \{(1,0),(-1,0)\}$$

given by

$$\beta((c_1,c_2,c_3,c_4)) = \begin{cases} (c_2/c_1, c_3) & \text{if} \quad c_1 \neq 0, \\ (c_4/c_3, c_3) & \text{if} \quad c_3 \neq 0 \end{cases}$$

(for all $(c_1,c_2,c_3,c_4) \in V \setminus \{(0,0,0,0)\}$), show that V is irreducible, and so is an affine variety.

(ii) Deduce from Exercise 4.3.8 above that V cannot be 'defined by two equations'.

5

Other approaches

Although we have now developed enough of the basic algebraic theory of local cohomology so that we could, if we wished, start right away with serious calculations with local cohomology modules, there are two other approaches to the construction of local cohomology modules which are popular with some workers in the subject. One approach uses cohomology of Čech complexes, and the other uses direct limits of homology modules of Koszul complexes. We shall have occasion later in the book to use the Čech complex approach to local cohomology, and we present the basic ideas of this approach in this chapter. This work leads naturally to the connection between local cohomology and direct limits of homology modules of Koszul complexes, and so some aspects of this are included in this chapter.

However, we do not use Koszul complexes as a tool anywhere in this book: in fact, the only references in later chapters to results from Section 5.2 are in Exercise 12.4.4, which shows that the main Theorem 5.2.9 of Section 5.2 can also be used in graded situations to calculate gradings on graded local cohomology modules. We have included Section 5.2 because it would be remiss of us to write a book on local cohomology without mentioning the links with Koszul complexes.

Links between local cohomology and Koszul complexes and Čech cohomology are described in A. Grothendieck's foundational lecture notes [18, §2]; related ideas are present in J.-P. Serre's fundamental paper [56, §61]. Among other texts which discuss links between local cohomology and the Čech complex or Koszul complexes are those by W. Bruns and J. Herzog [6, §3.5], M. Herrmann, S. Ikeda and U. Orbanz [23, §35], P. Roberts [51, Chapter 3, §2], J. R. Strooker [62, §4.3] and J. Stückrad and W. Vogel [63, Chapter 0, §1.3].

5.1 Use of Čech complexes

Throughout this chapter, $a_1, \ldots, a_n$ (where $n > 0$) will denote n elements which generate $\mathfrak{a}$, and M will denote an arbitrary R-module. Our first task is to define the (extended) Čech complex $C(M)^\bullet$ of M with respect to the sequence $a_1, \ldots, a_n$. This has the form

$$0 \longrightarrow C(M)^0 \xrightarrow{d^0} C(M)^1 \longrightarrow \cdots \longrightarrow C(M)^{n-1} \xrightarrow{d^{n-1}} C(M)^n \longrightarrow 0.$$

The following lemma will be helpful. Recall again that, for $a \in R$, the notations R_a and M_a denote, respectively, the ring and module of fractions of R and M with respect to the multiplicatively closed subset $\{a^i : i \in \mathbb{N}_0\}$ of R.

5.1.1 Lemma. *Let $a, b \in R$. There is an isomorphism of R-modules*

$$\mu : M_{ab} \longrightarrow (M_a)_b$$

for which $\mu(m/(ab)^i) = (m/a^i)/b^i$ for all $m \in M$ and all $i \in \mathbb{N}_0$.

Proof. Suppose that $m, y \in M$ and $i, j \in \mathbb{N}_0$ are such that $m/(ab)^i = y/(ab)^j$ in M_{ab}. Then there exists $k \in \mathbb{N}_0$ such that

$$(ab)^k\big((ab)^j m - (ab)^i y\big) = 0.$$

Thus, in M_a, we have $b^{k+j}m/a^i = b^{k+i}y/a^j$, so that $(m/a^i)/b^i = (y/a^j)/b^j$ in $(M_a)_b$. Therefore there is indeed a mapping $\mu : M_{ab} \longrightarrow (M_a)_b$ given by the formula in the statement of the lemma. It is now a very easy exercise to check that μ is an R-isomorphism. □

5.1.2 ♯Exercise. Complete the proof of Lemma 5.1.1.

5.1.3 Remark. In situations such as that of 5.1.1, we shall use μ to identify the R-modules M_{ab} and $(M_a)_b$ without further comment. Thus, when we speak of the natural R-homomorphism $\omega : M_a \longrightarrow M_{ab}$, we shall be referring to the natural R-homomorphism from M_a to $(M_a)_b$ and employing the above identification, so that $\omega(m/a^i) = b^i m/(ab)^i$ for all $m \in M$ and $i \in \mathbb{N}_0$. These ideas are employed in the construction of the Čech complex of M with respect to $a_1, \ldots, a_n$ in 5.1.5 below.

5.1.4 Notation. For $k \in \mathbb{N}$ with $1 \leq k \leq n$, we shall write

$$\mathscr{I}(k, n) := \big\{(i(1), \ldots, i(k)) \in \mathbb{N}^k : 1 \leq i(1) < i(2) < \ldots < i(k) \leq n\big\},$$

the set of all strictly increasing sequences of length k of positive integers taken from the set $\{1, \ldots, n\}$. For $i \in \mathscr{I}(k, n)$, we shall, for $1 \leq j \leq k$, denote the j-th component of i by $i(j)$, so that $i = (i(1), \ldots, i(k))$.

Now suppose that $k < n$, and $s \in \mathbb{N}$ with $1 \leq s \leq k+1$. Let $j \in \mathscr{I}(k+1, n)$. Then by

$$j^{\hat{s}} \qquad \text{or} \qquad (j(1), \ldots, \widehat{j(s)}, \ldots, j(k+1))$$

we mean the sequence $(j(1), \ldots, j(s-1), j(s+1), \ldots, j(k+1))$ of $\mathscr{I}(k, n)$ obtained by omitting the s-th component of j.

It is perhaps worth pointing out here that, if $t \in \mathbb{N}$ with $1 \leq t < s$, then $(j^{\hat{s}})^{\hat{t}} = (j^{\hat{t}})^{\widehat{s-1}}$.

Again under the assumption that $k < n$, let $i \in \mathscr{I}(k, n)$. By the *n-complement of* i we mean the sequence $j \in \mathscr{I}(n-k, n)$ such that

$$\{1, \ldots, n\} = \{i(1), \ldots, i(k), j(1), \ldots, j(n-k)\}.$$

5.1.5 Proposition and Definition. *Define a sequence $C(M)^\bullet$ of R-modules and R-homomorphisms*

$$0 \longrightarrow C(M)^0 \xrightarrow{d^0} C(M)^1 \longrightarrow \cdots \longrightarrow C(M)^{n-1} \xrightarrow{d^{n-1}} C(M)^n \longrightarrow 0$$

as follows:

(*a*) $C(M)^0 := M$;

(*b*) *for* $k = 1, \ldots, n$, *and with the notation of* 5.1.4,

$$C(M)^k = \bigoplus_{i \in \mathscr{I}(k,n)} M_{a_{i(1)} \cdots a_{i(k)}};$$

(*c*) $d^0 : C(M)^0 \longrightarrow C(M)^1$ *is to be such that, for each* $h = 1, \ldots, n$, *the composition of* d^0 *followed by the canonical projection from* $C(M)^1$ *to* M_{a_h} *is just the natural map from* M *to* M_{a_h}; *and*

(*d*) *for* $k = 1, \ldots, n-1$, $i \in \mathscr{I}(k, n)$ *and* $j \in \mathscr{I}(k+1, n)$, *the composition*

$$M_{a_{i(1)} \cdots a_{i(k)}} \longrightarrow C(M)^k \xrightarrow{d^k} C(M)^{k+1} \longrightarrow M_{a_{j(1)} \cdots a_{j(k+1)}}$$

(in which the first and third maps are the canonical injection and canonical projection respectively) is to be the natural map from $M_{a_{i(1)} \cdots a_{i(k)}}$ *to* $M_{a_{i(1)} \cdots a_{i(k)} a_{j(s)}}$ *multiplied by* $(-1)^{s-1}$ *if* $i = j^{\hat{s}}$ *for an* s *with* $1 \leq s \leq k+1$, *and is to be* 0 *otherwise.*

Then $C(M)^\bullet$ *is a complex, called* the (extended) Čech complex of M with respect to $a_1, \ldots, a_n$. *(Henceforth, we shall omit the word 'extended'.)*

We denote $C(R)^\bullet$ *by*

$$C^\bullet : 0 \longrightarrow C^0 \xrightarrow{d^0} C^1 \longrightarrow \cdots \longrightarrow C^i \xrightarrow{d^i} C^{i+1} \longrightarrow \cdots \longrightarrow C^n \longrightarrow 0.$$

Proof. We have only to prove that $d^{k+1} \circ d^k = 0$ for all $k = 0, \ldots, n-2$.

Let $m \in M$. To show that $d^1 \circ d^0 = 0$, it is enough to show that, for each $i \in \mathscr{I}(2,n)$, the component of $d^1 \circ d^0(m)$ in the direct summand $M_{a_{i(1)}a_{i(2)}}$ of $C(M)^2$ is 0. The only contributions to this component that could conceivably be non-zero must come 'through' the direct summands $M_{a_{i(1)}}$ and $M_{a_{i(2)}}$ of $C(M)^1$. It follows that the component of $d^1 \circ d^0(m)$ in the direct summand $M_{a_{i(1)}a_{i(2)}}$ of $C(M)^2$ is $(-1)(m/1) + (m/1) = 0$. Hence $d^1 \circ d^0 = 0$.

Now consider the case where $1 \leq k \leq n-2$. In order to show that $d^{k+1} \circ d^k = 0$, it is enough to show that, for each $i \in \mathscr{I}(k,n)$, the restriction of $d^{k+1} \circ d^k$ to the direct summand $M_{a_{i(1)} \ldots a_{i(k)}}$ of $C(M)^k$ is zero, and this is what we shall do. So let $m \in M, v \in \mathbb{N}_0$ and $j \in \mathscr{I}(k+2,n)$: we calculate the component of

$$d^{k+1} \circ d^k \left(\frac{m}{(a_{i(1)} \ldots a_{i(k)})^v} \right)$$

in the direct summand $M_{a_{j(1)} \ldots a_{j(k+2)}}$ of $C(M)^{k+2}$. This component will be (conceivably) non-zero only if $i = (\hat{j^s})^{\hat{t}}$ for some integers s, t with $1 \leq t < s \leq k+2$, and, when this is so, will (in view of the penultimate paragraph of 5.1.4) be

$$\frac{(-1)^{t-1}(-1)^{s-2} a^v_{j(t)} a^v_{j(s)} m}{(a_{j(1)} \ldots a_{j(k+2)})^v} + \frac{(-1)^{s-1}(-1)^{t-1} a^v_{j(s)} a^v_{j(t)} m}{(a_{j(1)} \ldots a_{j(k+2)})^v},$$

which is zero. Hence $d^{k+1} \circ d^k = 0$, and the proof is complete. □

5.1.6 Example. The reader might find it helpful if we write down explicitly the Čech complex $C^\bullet = C(R)^\bullet$ of R with respect to $a_1, \ldots, a_n$ when n has a fairly small value: when $n = 3$, the complex is

$$0 \longrightarrow R \xrightarrow{d^0} R_{a_1} \oplus R_{a_2} \oplus R_{a_3} \xrightarrow{d^1} R_{a_2a_3} \oplus R_{a_1a_3} \oplus R_{a_1a_2} \xrightarrow{d^2} R_{a_1a_2a_3} \longrightarrow 0,$$

where the d^i $(i = 0, 1, 2)$ are described as follows. For $r, r_1, r_2, r_3 \in R$ and $v_1, v_2, v_3 \in \mathbb{N}_0$,

$$d^0(r) = \left(\frac{r}{1}, \frac{r}{1}, \frac{r}{1} \right),$$

$$d^1\left(\left(\frac{r_1}{a_1^{v_1}}, \frac{r_2}{a_2^{v_2}}, \frac{r_3}{a_3^{v_3}} \right) \right)$$
$$= \left(\frac{a_2^{v_3} r_3}{(a_2a_3)^{v_3}} - \frac{a_3^{v_2} r_2}{(a_2a_3)^{v_2}}, \frac{a_1^{v_3} r_3}{(a_1a_3)^{v_3}} - \frac{a_3^{v_1} r_1}{(a_1a_3)^{v_1}}, \frac{a_1^{v_2} r_2}{(a_1a_2)^{v_2}} - \frac{a_2^{v_1} r_1}{(a_1a_2)^{v_1}} \right)$$

and

$$d^2\left(\left(\frac{r_1}{(a_2a_3)^{v_1}}, \frac{r_2}{(a_1a_3)^{v_2}}, \frac{r_3}{(a_1a_2)^{v_3}} \right) \right)$$
$$= \frac{a_1^{v_1} r_1}{(a_1a_2a_3)^{v_1}} - \frac{a_2^{v_2} r_2}{(a_1a_2a_3)^{v_2}} + \frac{a_3^{v_3} r_3}{(a_1a_2a_3)^{v_3}}.$$

5.1.7 ♯Exercise. Suppose that $n > 1$ and M is Ra_n-torsion. Show that the Čech complex of M with respect to $a_1, \ldots, a_n$ is the Čech complex of M with respect to $a_1, \ldots, a_{n-1}$.

5.1.8 ♯Exercise. Show that a homomorphism $f : M \to N$ of R-modules induces a chain map of complexes $C(f)^\bullet : C(M)^\bullet \longrightarrow C(N)^\bullet$ such that $C(f)^0 : C(M)^0 \to C(N)^0$ is just $f : M \to N$.

Show further that, with these assignments, $C(\,\cdot\,)^\bullet$ becomes a functor from the category $\mathscr{C}(R)$ to the category of complexes of R-modules (and R-homomorphisms) and chain maps of such complexes.

5.1.9 ♯Exercise. Use the natural isomorphisms

$$M \otimes_R R_{a_{i(1)} \ldots a_{i(k)}} \xrightarrow{\cong} M_{a_{i(1)} \ldots a_{i(k)}} \qquad (\text{for } i \in \mathscr{I}(k, n))$$

(where $1 \leq k \leq n$) to produce an isomorphism of complexes

$$\omega_M^\bullet : M \otimes_R C^\bullet \xrightarrow{\cong} C(M)^\bullet.$$

Show further that, as M varies through $\mathscr{C}(R)$, the $\omega_M^\bullet$ constitute a natural equivalence of functors $\omega^\bullet : (\,\cdot\,) \otimes_R C^\bullet \longrightarrow C(\,\cdot\,)^\bullet$ (from $\mathscr{C}(R)$ to the category of all complexes of R-modules (and R-homomorphisms) and chain maps of such complexes).

5.1.10 ♯Exercise. In this and the next few exercises, we shall be concerned with relationships between Čech complexes of M with respect to different sequences of elements of R, and, for such discussions, it will help if we use a slightly more complicated notation. Thus, in this and a few subsequent situations, we shall use $C(a_1, \ldots, a_n; M)^\bullet$ to denote the Čech complex of M with respect to $a_1, \ldots, a_n$.

(i) Suppose that $n \geq 2$, and let $m \in \mathbb{N}$ be such that $1 \leq m < n$. Let $b_1, \ldots, b_n$ denote the sequence $a_1, \ldots, a_{m-1}, a_{m+1}, a_m, a_{m+2}, \ldots, a_n$ obtained from the sequence $a_1, \ldots, a_n$ by interchange of the m-th and $(m+1)$-th terms.

Let $k \in \mathbb{N}$ with $1 \leq k \leq n$. Let $i \in \mathscr{I}(k, n)$.

If neither m nor $m+1$ appears as a term in i, then

$$M_{a_{i(1)} \ldots a_{i(k)}} = M_{b_{i(1)} \ldots b_{i(k)}} :$$

define $\psi(i) : M_{a_{i(1)} \ldots a_{i(k)}} \longrightarrow M_{b_{i(1)} \ldots b_{i(k)}}$ to be the identity mapping in this case.

If $m+1$ does not appear as a term in i but $m = i(s)$, then

$$M_{a_{i(1)} \ldots a_{i(k)}} = M_{b_{i(1)} \ldots b_{i(s-1)} b_{i(s)+1} b_{i(s+1)} \ldots b_{i(k)}} :$$

define $\psi(i) : M_{a_{i(1)}\dots a_{i(k)}} \longrightarrow M_{b_{i(1)}\dots b_{i(s-1)}b_{i(s)-1}b_{i(s+1)}\dots b_{i(k)}}$ to be the identity mapping in this case.

If m does not appear as a term in i but $m+1 = i(s)$, then

$$M_{a_{i(1)}\dots a_{i(k)}} = M_{b_{i(1)}\dots b_{i(s-1)}b_{i(s)}\cdot(b_{i(s+1)}\dots b_{i(k)}}:$$

define $\psi(i) : M_{a_{i(1)}\dots a_{i(k)}} \longrightarrow M_{b_{i(1)}\dots b_{i(s-1)}b_{i(s)-1}b_{i(s+1)}\dots b_{i(k)}}$ to be the identity mapping in this case.

If m and $m+1$ both appear in i, with, say, $m = i(s)$ (so that $m+1 = i(s)+1 = i(s+1)$), then

$$M_{a_{i(1)}\dots a_{i(k)}} = M_{b_{i(1)}\dots b_{i(k)}}:$$

in this case, define $\psi(i) : M_{a_{i(1)}\dots a_{i(k)}} \longrightarrow M_{b_{i(1)}\dots b_{i(k)}}$ to be the identity mapping multiplied by -1.

Let $\psi^k = \bigoplus_{i\in\mathcal{I}(k,n)} \psi(i) : C(a_1,\dots,a_n;M)^k \longrightarrow C(b_1,\dots,b_n;M)^k$. Also, let $\psi^0 : M \longrightarrow M$ be the identity mapping. Show that

$$\Psi = \left(\psi^k\right)_{0\le k\le n} : C(a_1,\dots,a_n;M)^\bullet \longrightarrow C(b_1,\dots,b_n;M)^\bullet$$

is an isomorphism of complexes.

(ii) Let σ be a permutation of the set $\{1,\dots,n\}$. Show that there is an isomorphism of complexes

$$C(a_1,\dots,a_n;M)^\bullet \xrightarrow{\cong} C(a_{\sigma(1)},\dots,a_{\sigma(n)};M)^\bullet.$$

5.1.11 Definition. Let $m \in \mathbb{Z}$, and let

$$Q^\bullet : \quad \cdots \longrightarrow Q^k \xrightarrow{d^k_{Q^\bullet}} Q^{k+1} \xrightarrow{d^{k+1}_{Q^\bullet}} Q^{k+2} \longrightarrow \cdots$$

be a complex of R-modules and R-homomorphisms. We define $\{m\}Q^\bullet$, the result of *shifting* $Q^\bullet$ *by* m *places*, as follows: $(\{m\}Q^\bullet)^k = Q^{m+k}$ for all $k \in \mathbb{Z}$, and the k-th 'differentiation' homomorphism $d^k_{\{m\}Q^\bullet}$ in $\{m\}Q^\bullet$ is given by $d^k_{\{m\}Q^\bullet} = d^{m+k}_{Q^\bullet} : Q^{m+k} \longrightarrow Q^{m+k+1}$. Thus changing $Q^\bullet$ into $\{1\}Q^\bullet$ (respectively $\{-1\}Q^\bullet$) amounts to shifting it one place to the left (respectively right).

5.1.12 ♯Exercise. In this exercise, we use the extended notation for Čech complexes introduced in Exercise 5.1.10.

Let $b \in R$. Show that there is a sequence of complexes (of R-modules and R-homomorphisms) and chain maps

$$\begin{aligned} 0 \longrightarrow \{-1\}C(a_1,\dots,a_n;M_b)^\bullet &\longrightarrow C(a_1,\dots,a_n,b;M)^\bullet \\ &\longrightarrow C(a_1,\dots,a_n;M)^\bullet \longrightarrow 0 \end{aligned}$$

which is such that, for each $i \in \mathbb{N}_0$, the sequence

$$0 \longrightarrow (\{-1\}C(a_1, \ldots, a_n; M_b)^\bullet)^i \longrightarrow C(a_1, \ldots, a_n, b; M)^i$$
$$\longrightarrow C(a_1, \ldots, a_n; M)^i \longrightarrow 0$$

is exact.

5.1.13 Exercise. In this exercise, we use the extended notation for Čech complexes introduced in Exercise 5.1.10.

Let $a \in R$. Show that $H^i(C(a; M)^\bullet) \cong H^i_{Ra}(M)$ for all $i \in \mathbb{N}_0$.

5.1.14 ♯Exercise. Show that all the cohomology modules of the Čech complex $C(M)^\bullet$ are $\mathfrak{a}$-torsion. (Here are some hints: try induction on the number of elements needed to generate $\mathfrak{a}$, in conjunction with 5.1.12 and 5.1.10.)

5.1.15 Exercise. In this exercise, we again use the extended notation for Čech complexes introduced in Exercise 5.1.10.

Suppose that $b_1, \ldots, b_m$ also generate $\mathfrak{a}$. Prove that

$$H^i(C(a_1, \ldots, a_n; M)^\bullet) \cong H^i(C(b_1, \ldots, b_m; M)^\bullet) \qquad \text{for all } i \in \mathbb{N}_0,$$

that is, the cohomology modules of the Čech complex $C(M)^\bullet$ are, up to R-isomorphism, independent of the choice of sequence of generators for $\mathfrak{a}$. (Again, we provide some hints: use 5.1.12 to compare $C(a_1, \ldots, a_n, b_1; M)^\bullet$ and $C(a_1, \ldots, a_n; M)^\bullet$; and you may find 5.1.14 and 5.1.10 helpful.)

Our first major aim in this chapter is to show that, for each $i \in \mathbb{N}_0$, the local cohomology module $H^i_{\mathfrak{a}}(M)$ is isomorphic to $H^i(C(M)^\bullet)$, the i-th cohomology module of the Čech complex $C(M)^\bullet$. The next remark is a first step.

5.1.16 Remark. In the Čech complex

$$C(M)^\bullet : 0 \longrightarrow M \xrightarrow{d^0} M_{a_1} \oplus M_{a_2} \oplus \cdots \oplus M_{a_n} \longrightarrow \ldots,$$

we have

$$\begin{aligned} H^0(C(M)^\bullet) &= \operatorname{Ker} d^0 \\ &= \{m \in M : \text{ for each } i = 1, \ldots, n, \text{ there exists} \\ &\qquad\qquad h_i \in \mathbb{N} \text{ with } a_i^{h_i} m = 0\} \\ &= \Gamma_{\mathfrak{a}}(M). \end{aligned}$$

It will probably come as no surprise to the reader to learn that we intend to exploit the above Remark 5.1.16 by use of negative strongly connected sequences of functors and 1.3.5.

In the next lemma, we use the notation

$$C^\bullet : 0 \longrightarrow C^0 \xrightarrow{d^0} C^1 \longrightarrow \cdots \longrightarrow C^i \xrightarrow{d^i} C^{i+1} \longrightarrow \cdots \longrightarrow C^n \longrightarrow 0$$

for the Čech complex of R itself with respect to $a_1, \ldots, a_n$. We interpret C^i as 0 for $i \in \mathbb{Z} \setminus \{0, 1, \ldots, n\}$, of course.

It should be clear to the reader that $H^i((\,\cdot\,) \otimes_R C^\bullet)$ is, for each $i \in \mathbb{N}_0$, a covariant R-linear functor from $\mathscr{C}(R)$ to itself.

5.1.17 Lemma. *The sequence $(H^i((\,\cdot\,) \otimes_R C^\bullet))_{i \in \mathbb{N}_0}$ is a negative strongly connected sequence of covariant functors from $\mathscr{C}(R)$ to itself.*

Proof. Let

$$\begin{tikzcd}
0 \arrow[r] & L \arrow[r, "\alpha"] \arrow[d, "\lambda"] & M \arrow[r, "\beta"] \arrow[d, "\mu"] & N \arrow[r] \arrow[d, "\nu"] & 0 \\
0 \arrow[r] & L' \arrow[r, "\alpha'"] & M' \arrow[r, "\beta'"] & N' \arrow[r] & 0
\end{tikzcd}$$

be a commutative diagram of R-modules and R-homomorphisms with exact rows. Now for each $i \in \mathbb{N}$, the R-module C^i is flat, since it is a direct sum of finitely many modules of fractions of the form $S^{-1}R$ for suitable choices of the multiplicatively closed subset S of R. It follows that there is a commutative diagram

$$\begin{tikzcd}
0 \arrow[r] & L \otimes_R C^\bullet \arrow[r, "\alpha \otimes C^\bullet"] \arrow[d, "\lambda \otimes C^\bullet"] & M \otimes_R C^\bullet \arrow[r, "\beta \otimes C^\bullet"] \arrow[d, "\mu \otimes C^\bullet"] & N \otimes_R C^\bullet \arrow[r] \arrow[d, "\nu \otimes C^\bullet"] & 0 \\
0 \arrow[r] & L' \otimes_R C^\bullet \arrow[r, "\alpha' \otimes C^\bullet"] & M' \otimes_R C^\bullet \arrow[r, "\beta' \otimes C^\bullet"] & N' \otimes_R C^\bullet \arrow[r] & 0
\end{tikzcd}$$

of complexes of R-modules and chain maps of such complexes such that, for each $i \in \mathbb{N}_0$, the sequence

$$0 \longrightarrow L \otimes_R C^i \xrightarrow{\alpha \otimes C^i} M \otimes_R C^i \xrightarrow{\beta \otimes C^i} N \otimes_R C^i \longrightarrow 0$$

is exact, and a similar property holds for the lower row. Thus the above commutative diagram of complexes gives rise to a long exact sequence of

cohomology modules of the complexes in the top row, a similar long exact sequence for the bottom row, and a chain map of the first long exact sequence into the second. The claim follows from this. □

5.1.18 Remark. It is immediate from 5.1.16 and 5.1.9 that there is an R-isomorphism $\gamma_M^0 : \Gamma_{\mathfrak{a}}(M) \xrightarrow{\cong} H^0(M \otimes_R C^\bullet)$ for which $\gamma_M^0(m) = m \otimes 1$ for all $m \in \Gamma_{\mathfrak{a}}(M)$, and it is then clear that, as M varies through $\mathscr{C}(R)$, the γ_M^0 constitute a natural equivalence of functors $\gamma^0 : \Gamma_{\mathfrak{a}} \longrightarrow H^0((\,\cdot\,) \otimes_R C^\bullet)$ from $\mathscr{C}(R)$ to itself.

5.1.19 Theorem. *(Recall that $a_1, \ldots, a_n$ (where $n > 0$) denote n elements which generate $\mathfrak{a}$, and $C^\bullet$ denotes the Čech complex of R with respect to $a_1, \ldots, a_n$.) There is a unique isomorphism*

$$(\gamma^i)_{i \in \mathbb{N}_0} : (H^i((\,\cdot\,) \otimes_R C^\bullet))_{i \in \mathbb{N}_0} \xrightarrow{\cong} (H^i_{\mathfrak{a}})_{i \in \mathbb{N}_0}$$

of negative (strongly) connected sequences of covariant functors (from $\mathscr{C}(R)$ to $\mathscr{C}(R)$) which extends the natural equivalence γ^0 of 5.1.18. *Consequently, $H^i(C(M)^\bullet) \cong H^i(M \otimes_R C^\bullet) \cong H^i_{\mathfrak{a}}(M)$ for each $i \in \mathbb{N}_0$.*

Proof. In view of Lemma 5.1.17, we shall be able to use Theorem 1.3.5 to prove the first part provided we can show that $H^i(I \otimes_R C^\bullet) = 0$ for all $i \in \mathbb{N}$ whenever I is an injective R-module. By 5.1.9, it is enough for us to show that $H^i(C(I)^\bullet) = 0$ for all $i \in \mathbb{N}$ whenever I is an injective R-module. We shall achieve this by induction on n, and we shall use the extended notation for Čech complexes introduced in Exercise 5.1.10.

When $n = 1$, the Čech complex $C(a_1; I)^\bullet$ is just $0 \longrightarrow I \xrightarrow{\tau_I} I_{a_1} \longrightarrow 0$, where τ_I is the natural map. But, by 2.2.17, $\operatorname{Coker} \tau_I \cong H^1_{Ra_1}(I)$, and the latter is zero because I is injective. Thus $H^i(C(I)^\bullet) = 0$ for all $i \in \mathbb{N}$. We note also that $\operatorname{Ker} \tau_I = \Gamma_{Ra_1}(I)$, which is injective by 2.1.4. Hence the exact sequence $0 \longrightarrow \Gamma_{Ra_1}(I) \longrightarrow I \xrightarrow{\tau_I} I_{a_1} \longrightarrow 0$ of 2.2.17 splits, and I_{a_1} is an injective R-module.

Now suppose, inductively, that $n > 1$ and the result has been proved for smaller values of n. By 5.1.12, there is a sequence of complexes (of R-modules and R-homomorphisms) and chain maps

$$\begin{aligned} 0 \longrightarrow \{-1\}C(a_1, \ldots, a_{n-1}; I_{a_n})^\bullet &\longrightarrow C(a_1, \ldots, a_n; I)^\bullet \\ &\longrightarrow C(a_1, \ldots, a_{n-1}; I)^\bullet \longrightarrow 0 \end{aligned}$$

which is such that, for each $i \in \mathbb{N}_0$, the sequence

$$\begin{aligned} 0 \longrightarrow (\{-1\}C(a_1, \ldots, a_{n-1}; I_{a_n})^\bullet)^i &\longrightarrow C(a_1, \ldots, a_n; I)^i \\ &\longrightarrow C(a_1, \ldots, a_{n-1}; I)^i \longrightarrow 0 \end{aligned}$$

is exact. This sequence of complexes therefore induces a long exact sequence of cohomology modules. Since I_{a_n} is an injective R-module (by the immediately preceding paragraph of this proof), we can deduce from our inductive hypothesis that

$$H^i(\{-1\}C(a_1,\ldots,a_{n-1};I_{a_n})^\bullet) = 0 \qquad \text{for all } i \geq 2$$

and

$$H^i(C(a_1,\ldots,a_{n-1};I)^\bullet) = 0 \qquad \text{for all } i \geq 1.$$

Furthermore, an easy check shows that the connecting homomorphism

$$H^0(C(a_1,\ldots,a_{n-1};I)^\bullet) \longrightarrow H^1(\{-1\}C(a_1,\ldots,a_{n-1};I_{a_n})^\bullet)$$

induced by the above sequence of complexes is just the map

$$\Gamma_{Ra_1+\cdots+Ra_{n-1}}(I) \longrightarrow \Gamma_{Ra_1+\cdots+Ra_{n-1}}(I_{a_n})$$

induced by the natural homomorphism $I \to I_{a_n}$, and this is surjective since the canonical exact sequence

$$0 \longrightarrow \Gamma_{Ra_n}(I) \longrightarrow I \longrightarrow I_{a_n} \longrightarrow 0$$

of 2.2.17 splits. It follows from the long exact sequence of cohomology modules that $H^i(C(a_1,\ldots,a_n;I)^\bullet) = 0$ for all $i \geq 1$. This completes the inductive step.

We can now use Theorem 1.3.5 to complete the proof of the first part. The second part follows immediately from the first part and 5.1.9. □

5.1.20 Remark. The reader should note that it is immediate from Theorem 5.1.19 that, when $\mathfrak{a}$ can be generated by n elements, $H^i_{\mathfrak{a}}(N) = 0$ for all R-modules N whenever $i > n$: we proved this result by means of the Mayer-Vietoris Sequence in Theorem 3.3.1. This is one example of a situation where the use of a different approach to the calculation of local cohomology modules can provide a simpler proof and additional insight. The next exercise provides another example.

5.1.21 Exercise. Prove that $H^n_{\mathfrak{a}}(R) \neq 0$ if and only if there exists $k \in \mathbb{N}$ such that, for every $t \in \mathbb{N}$, it is the case that

$$(a_1 \ldots a_n)^t \notin Ra_1^{t+k} + \cdots + Ra_n^{t+k}.$$

Deduce that, for $h \in \mathbb{N}$, in the ring $R[X_1,\ldots,X_h]$ of polynomials over R, we have $H^h_{(X_1,\ldots,X_h)}(R[X_1,\ldots,X_h]) \neq 0$.

Compare this approach with that of Exercise 4.2.3.

5.1.22 Exercise. Let $b \in R$. Deduce from Exercise 5.1.12 that there is a long exact sequence of R-modules and R-homomorphisms

$$\begin{array}{ccccccc}
0 & \longrightarrow & H^0_{\mathfrak{a}+Rb}(M) & \longrightarrow & H^0_{\mathfrak{a}}(M) & \longrightarrow & H^0_{\mathfrak{a}}(M_b) \\
 & \longrightarrow & H^1_{\mathfrak{a}+Rb}(M) & \longrightarrow & H^1_{\mathfrak{a}}(M) & \longrightarrow & H^1_{\mathfrak{a}}(M_b) \\
 & \longrightarrow & \cdots & & & & \cdots \\
 & \longrightarrow & H^i_{\mathfrak{a}+Rb}(M) & \longrightarrow & H^i_{\mathfrak{a}}(M) & \longrightarrow & H^i_{\mathfrak{a}}(M_b) \\
 & \longrightarrow & H^{i+1}_{\mathfrak{a}+Rb}(M) & \longrightarrow & \cdots & &
\end{array}$$

such that, whenever $f : M \to N$ is a homomorphism of R-modules, the diagram

$$\begin{tikzcd}
H^i_{\mathfrak{a}+Rb}(M) \arrow[r] \arrow[d, "H^i_{\mathfrak{a}+Rb}(f)"] & H^i_{\mathfrak{a}}(M) \arrow[r] \arrow[d, "H^i_{\mathfrak{a}}(f)"] & H^i_{\mathfrak{a}}(M_b) \arrow[r] \arrow[d, "H^i_{\mathfrak{a}}(f_b)"'] & H^{i+1}_{\mathfrak{a}+Rb}(M) \arrow[d, "H^{i+1}_{\mathfrak{a}+Rb}(f)"'] \\
H^i_{\mathfrak{a}+Rb}(N) \arrow[r] & H^i_{\mathfrak{a}}(N) \arrow[r] & H^i_{\mathfrak{a}}(N_b) \arrow[r] & H^{i+1}_{\mathfrak{a}+Rb}(N)
\end{tikzcd}$$

commutes for all $i \in \mathbb{N}_0$.

5.1.23 Proposition. *Let $K^1(M) := \operatorname{Ker} d^1$, where $d^1 : C(M)^1 \longrightarrow C(M)^2$ is the first 'differentiation' map in the Čech complex $C(M)^\bullet$ of M with respect to the sequence $a_1, \ldots, a_n$. (It is clear from 5.1.8 that $K^1(\,\cdot\,)$ can easily be made into a functor from $\mathscr{C}(R)$ to itself.)*

There is a natural equivalence of functors $\tilde{\varepsilon} : K^1(\,\cdot\,) \longrightarrow D_{\mathfrak{a}}$ which is such that, for each R-module M, the diagram

$$\begin{tikzcd}
M \arrow[r, "d^0"] \arrow[d, equal] & K^1(M) \arrow[d, "\tilde{\varepsilon}_M"] \\
M \arrow[r, "\eta_{\mathfrak{a},M}"] & D_{\mathfrak{a}}(M)
\end{tikzcd}$$

commutes.

Proof. By 5.1.14, the cohomology modules $H^i(C(M)^\bullet)$ are all $\mathfrak{a}$-torsion, and so both the kernel and cokernel of $d^0 : M \longrightarrow K^1(M)$ are $\mathfrak{a}$-torsion. It therefore follows from 2.2.13 that there is a unique R-homomorphism $\tilde{\varepsilon}_M : K^1(M) \longrightarrow$

$D_{\mathfrak{a}}(M)$ such that the diagram

$$\begin{tikzcd} M \arrow[r, "d^0"] \arrow[d, equal] & K^1(M) \arrow[d, "\tilde{\varepsilon}_M"] \\ M \arrow[r, "\eta_{\mathfrak{a},M}"] & D_{\mathfrak{a}}(M) \end{tikzcd}$$

commutes, and that $\tilde{\varepsilon}_M = D_{\mathfrak{a}}(d^0)^{-1} \circ \eta_{\mathfrak{a},K^1(M)}$. This formula and 2.2.4(i)(c) show that $\tilde{\varepsilon}_M$ is injective, since $\Gamma_{\mathfrak{a}}(K^1(M)) \subseteq \Gamma_{\mathfrak{a}}(C^1(M)) = 0$. Furthermore, it is easy to use the uniquness aspect of 2.2.11 to deduce that, as M varies through the category $\mathscr{C}(R)$, the $\tilde{\varepsilon}_M$ constitute a natural transformation of functors.

Let $t \in \mathbb{N}$, and let $h \in \operatorname{Hom}_R(\mathfrak{a}^t, M)$. It is straightforward to check that the element

$$\left(\frac{h(a_1^t)}{a_1^t}, \frac{h(a_2^t)}{a_2^t}, \ldots, \frac{h(a_n^t)}{a_n^t}\right) \in C(M)^1$$

actually belongs to $K^1(M)$. (Note that $a_i^t h(a_j^t) = h(a_i^t a_j^t) = a_j^t h(a_i^t)$ for integers i, j with $1 \leq i, j \leq n$.) Hence there is an R-homomorphism $\gamma_{t,M} : \operatorname{Hom}_R(\mathfrak{a}^t, M) \to K^1(M)$ for which

$$\gamma_{t,M}(h) = \left(\frac{h(a_1^t)}{a_1^t}, \ldots, \frac{h(a_n^t)}{a_n^t}\right) \qquad \text{for all } h \in \operatorname{Hom}_R(\mathfrak{a}^t, M).$$

Also, it is straightforward to check that, for $t, u \in \mathbb{N}$ with $u \geq t$, the diagram

$$\begin{tikzcd} \operatorname{Hom}_R(\mathfrak{a}^t, M) \arrow[d, "\operatorname{Hom}_R(j_t^u, M)"'] \arrow[dr, "\gamma_{t,M}"] & \\ \operatorname{Hom}_R(\mathfrak{a}^u, M) \arrow[r, "\gamma_{u,M}"'] & K^1(M) \end{tikzcd}$$

(in which $j_t^u : \mathfrak{a}^u \to \mathfrak{a}^t$ denotes the inclusion map) commutes, and so the $\gamma_{t,M}$ ($t \in \mathbb{N}$) induce an R-homomorphism $\gamma_M : D_{\mathfrak{a}}(M) \longrightarrow K^1(M)$ for which $\gamma_M \circ \eta_{\mathfrak{a},M} = d^0$. Note that $\tilde{\varepsilon}_M \circ \gamma_M = \operatorname{Id}_{D_{\mathfrak{a}}(M)}$ by the uniqueness aspect of 2.2.13. Hence $\tilde{\varepsilon}_M$ is surjective, and so is an isomorphism. □

5.1.24 Exercise. Consider the special case of 5.1.23 in which $M = R$. Note that $C^1 = C(R)^1 = \prod_{i=1}^n R_{a_i}$ has a natural structure as a (commutative Noetherian) ring (with identity), and that $d^0 : R \to C^1$ is a ring homomorphism. Recall also from 2.2.3 that $D_{\mathfrak{a}}(R)$ has a structure as a commutative ring with identity.

Show that $K^1(R)$ is a subring of C^1, and deduce from 2.2.14 that $\tilde{\varepsilon}_R : K^1(R) \longrightarrow D_{\mathfrak{a}}(R)$ (where $\tilde{\varepsilon}_R$ is as in 5.1.23) is actually a ring isomorphism.

The next exercise concerns the ring $K^1(R)$ in a geometrical situation.

5.1.25 Exercise. Let V be an affine variety over the algebraically closed field K. Consider C^1 and $K^1(R)$ (of 5.1.24) in the special case in which $R = \mathcal{O}(V)$, and assume that the ideal $\mathfrak{a}$ of $\mathcal{O}(V)$ is non-zero (and generated by $a_1, \ldots, a_n$, all of which are assumed to be non-zero). Let U be the open subset $V \setminus \{p \in V : a_1(p) = \ldots = a_n(p) = 0\}$ of V.

For each $j = 1, \ldots, n$, let U_j denote the open subset $\{p \in V : a_j(p) \neq 0\}$ of U, identify the subring $\mathcal{O}(V)_{a_j}$ of $K(V)$ with the ring $\mathcal{O}(U_j)$ of regular functions on U_j in the natural way, and let $\iota_j : \mathcal{O}(U) \longrightarrow \mathcal{O}(U_j)$ be the restriction homomorphism.

Show that the map $\lambda : \mathcal{O}(U) \longrightarrow \prod_{j=1}^{n} \mathcal{O}(U_j)$ for which

$$\lambda(g) = (\iota_1(g), \ldots, \iota_n(g)) \qquad \text{for all } g \in \mathcal{O}(U)$$

is an injective ring homomorphism with image $K^1(\mathcal{O}(V))$. In this way, we obtain a ring isomorphism $\lambda' : \mathcal{O}(U) \xrightarrow{\cong} K^1(\mathcal{O}(V))$. Show that, with the notation of 5.1.24, the diagram

$$\begin{tikzcd}
\mathcal{O}(V) \arrow[r, "\Gamma_U"] \arrow[dr, "\eta_{\mathfrak{a},\mathcal{O}(V)}"'] & \mathcal{O}(U) \arrow[d, "\cong", "\tilde{\varepsilon}_{\mathcal{O}(V)} \circ \lambda'"'] \\
& D_{\mathfrak{a}}(\mathcal{O}(V))
\end{tikzcd}$$

commutes, and deduce from 2.3.2 that $\tilde{\varepsilon}_{\mathcal{O}(V)} \circ \lambda'$ is the $\nu_{V,\mathfrak{a}}$ of that theorem.

5.2 Use of Koszul complexes

We revert to the general situation and remind the reader that, throughout this chapter, $a_1, \ldots, a_n$ (where $n > 0$) denote n elements which generate $\mathfrak{a}$, and M denotes an arbitrary R-module.

There is yet another method of calculation of local cohomology modules: this describes them as direct limits of homology modules of Koszul complexes. We present this description here, because it can be derived quickly from our work so far in this chapter on the Čech complex. We need to specify our notation for the Koszul complexes which we shall use.

5.2.1 Notation. For all $u \in \mathbb{N}$, we denote by $K(a^u)_\bullet$ (or $K(a_1^u, \ldots, a_n^u)_\bullet$) the usual Koszul complex of R with respect to $a_1^u, \ldots, a_n^u$. Thus, if F denotes the free R-module R^n and, for each $i = 1, \ldots, n$, the element $(0, \ldots, 0, 1, 0, \ldots, 0) \in R^n$ which has i-th component 1 and all its other components 0 is denoted by e_i, then $K(a^u)_\bullet$ has the form

$$\begin{aligned} 0 \longrightarrow K(a^u)_n \longrightarrow \cdots \longrightarrow K(a^u)_k \xrightarrow{d(a^u)_k} K(a^u)_{k-1} \longrightarrow \\ \cdots \longrightarrow K(a^u)_0 \longrightarrow 0, \end{aligned}$$

where

$$K(a^u)_k = \bigwedge^k F = \bigwedge^k (R^n) \qquad \text{for } k = 0, \ldots, n$$

(so that $K(a^u)_0 = R$) and, for $k = 1, \ldots, n$ and $i \in \mathscr{I}(k, n)$ (with the notation of 5.1.4),

$$d(a^u)_k(e_{i(1)} \wedge \ldots \wedge e_{i(k)}) = \sum_{h=1}^{k} (-1)^{h-1} a_{i(h)}^u e_{i(1)} \wedge \ldots \wedge \widehat{e_{i(h)}} \wedge \ldots \wedge e_{i(k)},$$

where the '$\widehat{e_{i(h)}}$' indicates that $e_{i(h)}$ is omitted.

Of course, we set $K(a^u)_k = 0$ for all $k \in \mathbb{Z} \setminus \{0, 1, \ldots, n\}$.

5.2.2 Lemma. *Let $u, v \in \mathbb{N}$ with $u \leq v$. There is a chain map*

$$(\psi_u^v)_\bullet = ((\psi_u^v)_k)_{k \in \mathbb{Z}} : K(a^u)_\bullet \longrightarrow K(a^v)_\bullet$$

of complexes of R-modules and R-homomorphisms such that $(\psi_u^v)_n$ is the identity mapping of $\bigwedge^n F$, such that $(\psi_u^v)_0$ is the endomorphism of R given by multiplication by $(a_1 \ldots a_n)^{v-u}$, and such that, for $k = 1, \ldots, n-1$ and $i \in \mathscr{I}(k, n)$,

$$(\psi_u^v)_k(e_{i(1)} \wedge \ldots \wedge e_{i(k)}) = (a_{j(1)} \ldots a_{j(n-k)})^{v-u} e_{i(1)} \wedge \ldots \wedge e_{i(k)},$$

where $j \in \mathscr{I}(n-k, n)$ is the n-complement of i (see 5.1.4).

Proof. We must check that $d(a^v)_k \circ (\psi_u^v)_k = (\psi_u^v)_{k-1} \circ d(a^u)_k$ for each $k = 1, \ldots, n$. We leave this to the reader in the case in which $k = n$. For $1 \leq k < n$ and $i \in \mathscr{I}(k, n)$, $j \in \mathscr{I}(n-k, n)$ as in the statement of the lemma, we have

$$\begin{aligned} &(d(a^v)_k \circ (\psi_u^v)_k)(e_{i(1)} \wedge \ldots \wedge e_{i(k)}) \\ &\qquad = \sum_{h=1}^{k} (-1)^{h-1} a_{i(h)}^v (a_{j(1)} \ldots a_{j(n-k)})^{v-u} e_{i(1)} \wedge \ldots \wedge \widehat{e_{i(h)}} \wedge \ldots \wedge e_{i(k)}, \end{aligned}$$

and

$$\begin{aligned}
&((\psi_u^v)_{k-1} \circ d(a^u)_k)(e_{i(1)} \wedge \ldots \wedge e_{i(k)}) \\
&\quad = (\psi_u^v)_{k-1}\left(\sum_{h=1}^{k}(-1)^{h-1}a_{i(h)}^u e_{i(1)} \wedge \ldots \wedge \widehat{e_{i(h)}} \wedge \ldots \wedge e_{i(k)}\right) \\
&\quad = \sum_{h=1}^{k}(-1)^{h-1}(a_{j(1)}\ldots a_{j(n-k)})^{v-u}a_{i(h)}^v e_{i(1)} \wedge \ldots \wedge \widehat{e_{i(h)}} \wedge \ldots \wedge e_{i(k)} \\
&\quad = (d(a^v)_k \circ (\psi_u^v)_k)(e_{i(1)} \wedge \ldots \wedge e_{i(k)}). \ \square
\end{aligned}$$

5.2.3 ♯Exercise. Complete the proof of 5.2.2. In other words, show that, with the notation of the lemma, $d(a^v)_n \circ (\psi_u^v)_n = (\psi_u^v)_{n-1} \circ d(a^u)_n$.

5.2.4 Remark. It is clear that, in the notation of 5.2.2, for $u, v, w \in \mathbb{N}$ with $u \leq v \leq w$, we have $(\psi_v^w)_\bullet \circ (\psi_u^v)_\bullet = (\psi_u^w)_\bullet$, and that $(\psi_u^u)_\bullet$ is the identity chain map of the complex $K(a^u)_\bullet$ to itself. Thus the $(\psi_u^v)_\bullet$ turn the family $(K(a^u)_\bullet)_{u\in\mathbb{N}}$ into a direct system of complexes of R-modules and chain maps. Our immediate aim is to show that the direct limit complex, which we denote by $K(a^\infty)_\bullet$, is isomorphic to a shift of the Čech complex $C^\bullet$ of 5.1.5.

5.2.5 Theorem. *There is an isomorphism of complexes*

$$K(a^\infty)_\bullet = \varinjlim_{u\in\mathbb{N}} K(a^u)_\bullet \xrightarrow{\cong} \{n\}C^\bullet$$

between the direct limit complex of Koszul complexes described in 5.2.4 *and the shift* $\{n\}C^\bullet$ *of the Čech complex of* R *with respect to* $a_1, \ldots, a_n$.

Proof. Let $u \in \mathbb{N}$. We first define a chain map of complexes

$$(g_u)_\bullet : K(a^u)_\bullet \longrightarrow \{n\}C^\bullet.$$

Define $(g_u)_n : K(a^u)_n \longrightarrow (\{n\}C^\bullet)_n = C^{-n+n} = C^0 = R$ by requiring that

$$(g_u)_n(re_1 \wedge \ldots \wedge e_n) = (-1)^{1+2+\cdots+(n-1)}r \qquad \text{for all } r \in R.$$

(We point out now, to help the reader discern a pattern in what follows, that $\sum_{i=1}^{n-1} i = -n + \sum_{i=1}^{n} i$.) Now let $k \in \{1, \ldots, n-1\}$ and let i be a typical element of $\mathscr{I}(k,n)$ (with the notation of 5.1.4). Define an R-homomorphism

$$(g_u)_k : K(a^u)_k \longrightarrow (\{n\}C^\bullet)_k = C^{n-k}$$

by requiring that, for $i \in \mathscr{I}(k,n)$ as above,

$$(g_u)_k(e_{i(1)} \wedge \ldots \wedge e_{i(k)}) = \frac{(-1)^{i(1)+\cdots+i(k)-k}}{(a_{j(1)}\ldots a_{j(n-k)})^u}$$

in the direct summand $R_{a_{j(1)}\dots a_{j(n-k)}}$ of C^{n-k}, where $j \in \mathscr{I}(n-k,n)$ is the n-complement of i. Lastly, define an R-homomorphism $(g_u)_0 : K(a^u)_0 = R \longrightarrow (\{n\}C^\bullet)_0 = C^n = R_{a_1\dots a_n}$ by

$$(g_u)_0(r) = \frac{r}{(a_1 \dots a_n)^u} \qquad \text{for all } r \in R.$$

In order to show that $((g_u)_k)_{0\le k\le n}$ gives rise to a chain map of complexes $(g_u)_\bullet$, we must show that (with the notation of 5.1.5 concerning the complex $C^\bullet$)

$$(g_u)_{k-1} \circ d(a^u)_k = d^{n-k} \circ (g_u)_k \qquad \text{for all } k = 1,\dots,n.$$

We leave this to the reader in the case when $k = n$, and deal here with the case when $1 \le k < n$. Let $i \in \mathscr{I}(k,n)$, and let $j \in \mathscr{I}(n-k,n)$ be the n-complement of i. Then

$$\begin{aligned}
&((g_u)_{k-1} \circ d(a^u)_k)(e_{i(1)} \wedge \dots \wedge e_{i(k)}) \\
&\quad = (g_u)_{k-1}\left(\sum_{h=1}^{k}(-1)^{h-1}a^u_{i(h)}e_{i(1)} \wedge \dots \wedge \widehat{e_{i(h)}} \wedge \dots \wedge e_{i(k)}\right) \\
&\quad = \sum_{h=1}^{k}(-1)^{h-1}a^u_{i(h)}\frac{(-1)^{i(1)+\dots+i(h)+\dots+i(k)-(k-1)}(-1)^{i(h)}}{(a_{j(1)}\dots a_{j(n-k)}a_{i(h)})^u} \\
&\quad = \sum_{h=1}^{k}(-1)^{i(h)+h}\frac{(-1)^{i(1)+\dots+i(k)-k}a^u_{i(h)}}{(a_{j(1)}\dots a_{j(n-k)}a_{i(h)})^u}.
\end{aligned}$$

On the other hand,

$$(d^{n-k} \circ (g_u)_k)(e_{i(1)} \wedge \dots \wedge e_{i(k)}) = d^{n-k}\left(\frac{(-1)^{i(1)+\dots+i(k)-k}}{(a_{j(1)}\dots a_{j(n-k)})^u}\right).$$

We now refer back to 5.1.5: in order to evaluate the right hand side of the above equation, we need to know, for each $h = 1,\dots,k$, at which point $i(h)$ should be inserted in the sequence $(j(1),\dots,j(n-k))$ in order to make an increasing sequence: if it should occupy the s_h-th position in the new sequence, then

$$\{1,2,\dots,i(h)-1\} = \{i(1),\dots,i(h-1),j(1),\dots,j(s_h-1)\},$$

so that $i(h) - 1 = h - 1 + s_h - 1$. We thus see that

$$\begin{aligned}
&(d^{n-k} \circ (g_u)_k)(e_{i(1)} \wedge \ldots \wedge e_{i(k)}) \\
&= \sum_{h=1}^{k} (-1)^{i(h)-h} \frac{(-1)^{i(1)+\cdots+i(k)-k} a^u_{i(h)}}{(a_{j(1)} \ldots a_{j(n-k)} a_{i(h)})^u} \\
&= ((g_u)_{k-1} \circ d(a^u)_k)(e_{i(1)} \wedge \ldots \wedge e_{i(k)}).
\end{aligned}$$

It follows that we do indeed obtain a chain map of complexes

$$(g_u)_\bullet : K(a^u)_\bullet \longrightarrow \{n\}C^\bullet.$$

Next note that, for $u, v \in \mathbb{N}$ with $u \leq v$ and the chain map

$$(\psi^v_u)_\bullet = ((\psi^v_u)_k)_{k \in \mathbb{Z}} : K(a^u)_\bullet \longrightarrow K(a^v)_\bullet$$

of complexes of 5.2.2, we have a commutative diagram

$$\begin{tikzcd}
K(a^u)_\bullet \arrow[r, "(\psi^v_u)_\bullet"] \arrow[dr, "(g_u)_\bullet"'] & K(a^v)_\bullet \arrow[d, "(g_v)_\bullet"] \\
& \{n\}C^\bullet \ .
\end{tikzcd}$$

It follows that there is induced a chain map of complexes

$$(g_\infty)_\bullet = ((g_\infty)_k)_{k \in \mathbb{Z}} : K(a^\infty)_\bullet = \varinjlim_{u \in \mathbb{N}} K(a^u)_\bullet \longrightarrow \{n\}C^\bullet$$

which is clearly such that $(g_\infty)_k$ is surjective for all $k \in \mathbb{Z}$. In order to show that $(g_\infty)_\bullet$ is an isomorphism, it is enough to show that, for $u \in \mathbb{N}, k \in \mathbb{N}_0$ with $0 \leq k \leq n$ and $\beta \in \operatorname{Ker}(g_u)_k$, there exists $v \in \mathbb{N}$ with $u \leq v$ such that $\beta \in \operatorname{Ker}(\psi^v_u)_k$. This is very easy (and left to the reader) in the cases when $k = 0$ and $k = n$, and so we suppose that $1 \leq k < n$. Let $i \in \mathscr{I}(k, n)$. Now $(g_u)_k$ maps the direct summand $Re_{i(1)} \wedge \ldots \wedge e_{i(k)}$ of $K(a^u)_k$ into the direct summand $R_{a_{j(1)} \ldots a_{j(n-k)}}$ of $C^{n-k} = (\{n\}C^\bullet)_k$, where $j \in \mathscr{I}(n-k, n)$ is the n-complement of i. In view of this and the fact that $\mathscr{I}(k, n)$ is a finite set, we can assume that β has the form $re_{i(1)} \wedge \ldots \wedge e_{i(k)}$ for some $r \in R$. In this case, the fact that $\beta \in \operatorname{Ker}(g_u)_k$ means that there exists $w \in \mathbb{N}_0$ such that $(a_{j(1)} \ldots a_{j(n-k)})^w r = 0$, and then $(\psi^{u+w}_u)_k(re_{i(1)} \wedge \ldots \wedge e_{i(k)}) = 0$.

It follows that $(g_\infty)_\bullet$ is an isomorphism of complexes. □

5.2.6 ♯Exercise. Complete the proof of Theorem 5.2.5.

Because the Čech complex $C^\bullet$ can, by 5.1.19, be used to calculate the local cohomology modules $H^i_{\mathfrak{a}}(M)$ ($i \in \mathbb{N}_0$), it is a consequence of Theorem 5.2.5 that these local cohomology modules can also be computed in terms of Koszul complexes.

The result of the following exercise will be used in the proof of Theorem 5.2.9.

5.2.7 ♯Exercise. Let N be an R-module. Let $(\Lambda, \leq)$ be a (non-empty) directed partially ordered set, and let $((W_\alpha)^\bullet)_{\alpha\in\Lambda}$ be a direct system of complexes of R-modules and chain maps over Λ, with constituent chain maps $(h^\alpha_\beta)^\bullet : (W_\beta)^\bullet \to (W_\alpha)^\bullet$ (for each $(\alpha, \beta) \in \Lambda \times \Lambda$ with $\alpha \geq \beta$). Set

$$(W_\infty)^\bullet := \varinjlim_{\alpha\in\Lambda} (W_\alpha)^\bullet.$$

Show that the chain maps $N \otimes_R (h^\alpha_\beta)^\bullet$ (for $\alpha, \beta \in \Lambda$ with $\alpha \geq \beta$) turn the family $(N \otimes_R (W_\alpha)^\bullet)_{\alpha\in\Lambda}$ into a direct system of complexes of R-modules and R-homomorphisms and chain maps over Λ, and show that there is an isomorphism of complexes

$$\varinjlim_{\alpha\in\Lambda} (N \otimes_R (W_\alpha)^\bullet) \cong N \otimes_R (W_\infty)^\bullet = N \otimes_R \left(\varinjlim_{\alpha\in\Lambda} (W_\alpha)^\bullet \right).$$

5.2.8 ♯Exercise. For each $u \in \mathbb{N}$, let $K(a^u, M)_\bullet$ denote $M \otimes_R K(a^u)_\bullet$, the Koszul complex of M with respect to $a^u_1, \ldots, a^u_n$. Let $\alpha : M \longrightarrow N$ be a homomorphism of R-modules. For $v, w \in \mathbb{N}$ with $v \leq w$, there is a commutative diagram

$$\begin{tikzcd}
M \otimes_R K(a^v)_\bullet \arrow[r, "\alpha\otimes K(a^v)_\bullet"] \arrow[d, "M\otimes(\psi^w_v)_\bullet"] & N \otimes_R K(a^v)_\bullet \arrow[d, "N\otimes(\psi^w_v)_\bullet"] \\
M \otimes_R K(a^w)_\bullet \arrow[r, "\alpha\otimes K(a^w)_\bullet"] & N \otimes_R K(a^w)_\bullet
\end{tikzcd}$$

of complexes and chain maps; use this to show that, for each $j \in \mathbb{Z}$, the family $(H_j(K(a^u, M)_\bullet))_{u\in\mathbb{N}}$ is a direct system, and that $\varinjlim_{u\in\mathbb{N}} H_j(K(a^u, \cdot)_\bullet)$ is a covariant R-linear functor from $\mathscr{C}(R)$ to itself.

Show further that

$$\left(\varinjlim_{u\in\mathbb{N}} H_{n-i}(K(a^u, \cdot)_\bullet) \right)_{i\in\mathbb{N}_0}$$

is a negative strongly connected sequence of functors from $\mathscr{C}(R)$ to itself.

5.2.9 Theorem. *In the situation and with the notation of* 5.2.8, *there is a natural equivalence of functors* $\delta^0 : \varinjlim_{u\in\mathbb{N}} H_n(K(a^u, \bullet)_\bullet) \xrightarrow{\cong} \Gamma_{\mathfrak{a}}$ *from* $\mathscr{C}(R)$ *to itself; furthermore, there is a unique isomorphism*

$$(\delta^i)_{i\in\mathbb{N}_0} : \left(\varinjlim_{u\in\mathbb{N}} H_{n-i}(K(a^u, \bullet)_\bullet)\right)_{i\in\mathbb{N}_0} \xrightarrow{\cong} \left(H^i_{\mathfrak{a}}\right)_{i\in\mathbb{N}_0}$$

of negative (strongly) connected sequences of covariant functors (from $\mathscr{C}(R)$ *to* $\mathscr{C}(R)$*) which extends* δ^0.

Consequently, for each $i \in \mathbb{N}_0$ *and each* R*-module* M,

$$H^i_{\mathfrak{a}}(M) \cong \varinjlim_{u\in\mathbb{N}} H_{n-i}(K(a^u, M)_\bullet).$$

Proof. We shall use Theorem 1.3.5 again.

Let $u \in \mathbb{N}$. Note that (with the notation of 5.2.1) the homomorphism

$$\mathrm{Id}_M \otimes d(a^u)_n : M \otimes_R K(a^u)_n \longrightarrow M \otimes_R K(a^u)_{n-1}$$

has kernel $\{m \otimes (e_1 \wedge \ldots \wedge e_n) : m \in (0 :_M (a^u_1, \ldots, a^u_n))\}$, and that

$$\Gamma_{\mathfrak{a}}(M) = \bigcup_{n\in\mathbb{N}} (0 :_M (a^u_1, \ldots, a^u_n)).$$

Hence, for each $u \in \mathbb{N}$, there is a monomorphism

$$\delta_{u,M} : \mathrm{Ker}(\mathrm{Id}_M \otimes d(a^u)_n) \longrightarrow \Gamma_{\mathfrak{a}}(M)$$

with image $(0 :_M (a^u_1, \ldots, a^u_n))$; furthermore, for $u, v \in \mathbb{N}$ with $u \leq v$, the diagram

$$\begin{tikzcd}
\mathrm{Ker}(\mathrm{Id}_M \otimes d(a^u)_n) \arrow[d, "\subseteq"'] \arrow[dr, "\delta_{u,M}"] & \\
\mathrm{Ker}(\mathrm{Id}_M \otimes d(a^v)_n) \arrow[r, "\delta_{v,M}"'] & \Gamma_{\mathfrak{a}}(M)
\end{tikzcd}$$

commutes. It follows that there is induced an isomorphism

$$\delta^0_M : \varinjlim_{u\in\mathbb{N}} H_n(K(a^u, M)_\bullet) \xrightarrow{\cong} \Gamma_{\mathfrak{a}}(M),$$

and it is easy to check that, as M varies through $\mathscr{C}(R)$, the δ^0_M constitute a natural equivalence of functors $\delta^0 : \varinjlim_{u\in\mathbb{N}} H_n(K(a^u, \bullet)_\bullet) \xrightarrow{\cong} \Gamma_{\mathfrak{a}}$ from $\mathscr{C}(R)$ to itself.

Let I be an injective R-module. The fact that passage to direct limits preserves exactness ensures that

$$\varinjlim_{u\in\mathbb{N}} H_j(K(a^u,I)_\bullet) \cong H_j\left(\varinjlim_{u\in\mathbb{N}}(K(a^u,I)_\bullet)\right) \qquad \text{for all } j \in \mathbb{Z}.$$

It now follows from Exercise 5.2.7 that there is an isomorphism of complexes

$$\varinjlim_{u\in\mathbb{N}}(K(a^u,I)_\bullet) = \varinjlim_{u\in\mathbb{N}}(I \otimes_R K(a^u)_\bullet) \cong I \otimes_R K(a^\infty)_\bullet.$$

But 5.2.5 shows that $K(a^\infty)_\bullet \cong \{n\}C^\bullet$, and 5.1.19 shows that

$$H^i(I \otimes_R C^\bullet) \cong H^i_{\mathfrak{a}}(I) \qquad \text{for all } i \in \mathbb{N}_0.$$

Hence $\varinjlim_{u\in\mathbb{N}} H_{n-i}(K(a^u,I)_\bullet) = 0$ for all $i \in \mathbb{N}$.

We can now use Theorem 1.3.5 to complete the proof. □

6

Fundamental vanishing theorems

There are many important results concerning the vanishing of local cohomology modules. A few results of this type have already been presented earlier in the book: for example, Exercise 1.3.9(iv) is concerned with the fact that, if an R-module M is such that $\mathfrak{a}$ contains an M-sequence of length n, then $H^i_{\mathfrak{a}}(M) = 0$ for all $i < n$; also, Theorem 3.3.1 shows that, if $\mathfrak{a}$ can be generated by t elements, then, for every R-module M, we have $H^i_{\mathfrak{a}}(M) = 0$ for all $i > t$; and we strengthened the latter result in Corollary 3.3.3, where we showed that, for every R-module M, we have $H^i_{\mathfrak{a}}(M) = 0$ for all $i > \operatorname{ara}(\mathfrak{a})$.

In this chapter, we shall provide a further result of this type: we shall prove Grothendieck's Vanishing Theorem, which states that, if the non-zero R-module L has (Krull) dimension n, then $H^i_{\mathfrak{a}}(L) = 0$ for all $i > n$. We shall also prove that, when $(R, \mathfrak{m})$ is a local ring and the non-zero, finitely generated R-module M has dimension n, then $H^n_{\mathfrak{m}}(M) \neq 0$, so that, in view of Grothendieck's Vanishing Theorem, $n = \dim M$ is the greatest integer i for which $H^i_{\mathfrak{m}}(M) \neq 0$. Also in this chapter, we shall explore in greater detail the ideas of Exercise 1.3.9, and this investigation will lead to the result that $\operatorname{depth} M$ is the least integer i for which $H^i_{\mathfrak{m}}(M) \neq 0$. (Recall that $\operatorname{depth} M$ is the common length of all maximal M-sequences.) It will thus follow that, for such an M over such a local ring $(R, \mathfrak{m})$, it is only for integers i satisfying $\operatorname{depth} M \leq i \leq \dim M$ that it is possible that $H^i_{\mathfrak{m}}(M)$ could be non-zero, while this local cohomology module is definitely non-zero if i is at either extremity of this range.

Towards the end of the chapter, we shall exploit our earlier work to obtain a geometrical application: we shall establish a special case of Serre's Affineness Criterion (see [56, §46, Corollaire 1]), concerning the following situation. Let V be an affine variety over the algebraically closed field K. Let $\mathfrak{b}$ be a non-zero ideal of $\mathcal{O}(V)$, let $V(\mathfrak{b})$ denote the closed subset of V determined by $\mathfrak{b}$, and let U be the open subset $V \setminus V(\mathfrak{b})$ of V. Thus U is a quasi-affine variety. It is of fundamental importance in algebraic geometry to be able to determine whether

such a quasi-affine variety is itself affine. We shall show that U is affine if and only if $H^i_{\mathfrak{b}}(\mathcal{O}(V)) = 0$ for all $i \geq 2$. Thus this work is well suited to a chapter on 'vanishing theorems'!

6.1 Grothendieck's Vanishing Theorem

Our first main aim in this chapter is to present a proof of Grothendieck's Vanishing Theorem. We preface this with a reminder about the dimension of an R-module.

6.1.1 Reminder. Let M be a non-zero R-module. The (Krull) *dimension*, $\dim M$ or $\dim_R M$, *of* M is the supremum of lengths of chains of prime ideals in the support of M if this supremum exists, and ∞ otherwise. In the case when M is finitely generated, this is equal to $\dim R/(0 : M)$, the dimension of the ring $R/(0 : M)$, but this need not be the case if M is not finitely generated.

Also, we adopt the convention that the dimension of the zero R-module is -1.

6.1.2 Grothendieck's Vanishing Theorem. *Let M be an R-module. Then $H^i_{\mathfrak{a}}(M) = 0$ for all $i > \dim M$.*

Proof. Since, for each $\mathfrak{p} \in \operatorname{Spec}(R)$,

$$\operatorname{Supp}_{R_{\mathfrak{p}}}(M_{\mathfrak{p}}) = \{\mathfrak{q}R_{\mathfrak{p}} : \mathfrak{q} \in \operatorname{Supp}(M) \text{ and } \mathfrak{q} \subseteq \mathfrak{p}\},$$

it follows from 4.3.3 that it is sufficient for us to prove this result under the additional hypothesis that $(R, \mathfrak{m})$ is local. This is what we shall do.

When $\dim M = -1$, there is nothing to prove, as then $M = 0$. The result is also clear if $\mathfrak{a} = R$, as then $\Gamma_{\mathfrak{a}}$ is the zero functor of 3.4.7. We therefore suppose henceforth in this proof that $M \neq 0$ and $\mathfrak{a} \subseteq \mathfrak{m}$.

We argue by induction on $\dim M$. When $\dim M = 0$, each non-zero element $g \in M$ is annihilated by a power of $\mathfrak{m}$ (and therefore by a power of $\mathfrak{a}$), because the ring $R/(0 : g)$ is of dimension 0 and is therefore Artinian. Thus, in this case, M is $\mathfrak{a}$-torsion, and so it follows from 2.1.7(i) that $H^i_{\mathfrak{a}}(M) = 0$ for all $i > 0 = \dim M$.

Now suppose, inductively, that $\dim M = n > 0$, and the result has been proved for all R-modules of dimensions smaller than n. Since, by 3.4.10, for each $i \in \mathbb{N}_0$, the local cohomology functor $H^i_{\mathfrak{a}}$ commutes with direct limits, and M can be viewed as the direct limit of its finitely generated submodules, it is sufficient for us to prove that $H^i_{\mathfrak{a}}(M') = 0$ for all $i > n$ whenever M' is a finitely generated submodule of M. Since such an M' must have dimension

not exceeding n, we can therefore assume, in this inductive step, that M itself is finitely generated. This we do.

By 2.1.7(iii), we have $H^i_{\mathfrak{a}}(M) \cong H^i_{\mathfrak{a}}(M/\Gamma_{\mathfrak{a}}(M))$ for all $i > 0$. Also, $M/\Gamma_{\mathfrak{a}}(M)$ has dimension not exceeding n, and is an $\mathfrak{a}$-torsion-free R-module, by 2.1.2. In view of the inductive hypothesis, we can (and do) assume that M is a (non-zero, finitely generated) $\mathfrak{a}$-torsion-free R-module.

We now use 2.1.1(ii) to deduce that $\mathfrak{a}$ contains an element r which is a non-zerodivisor on M. Let $t, i \in \mathbb{N}$ with $i > n$. The exact sequence

$$0 \longrightarrow M \xrightarrow{r^t} M \longrightarrow M/r^tM \longrightarrow 0$$

(in which the second homomorphism is provided by multiplication by r^t) induces an exact sequence $H^{i-1}_{\mathfrak{a}}(M/r^tM) \longrightarrow H^i_{\mathfrak{a}}(M) \xrightarrow{r^t} H^i_{\mathfrak{a}}(M)$ of local cohomology modules. (The fact that the second homomorphism is again provided by multiplication by r^t follows from the fact that the functor $H^i_{\mathfrak{a}}$ is R-linear.)

Now $\dim(M/r^tM) < n$ since $r^t \notin \bigcup_{\mathfrak{p}\in \mathrm{Ass}(M)} \mathfrak{p}$ and every minimal member of $\mathrm{Supp}(M)$ belongs to $\mathrm{Ass}(M)$ (see [60, Theorem 9.39]). Hence, by the inductive hypothesis, $H^{i-1}_{\mathfrak{a}}(M/r^tM) = 0$. Thus, for each $t \in \mathbb{N}$, multiplication by r^t provides a monomorphism of $H^i_{\mathfrak{a}}(M)$ into itself. But $r \in \mathfrak{a}$ and $H^i_{\mathfrak{a}}(M)$ is an $\mathfrak{a}$-torsion R-module, so that each element of it is annihilated by some power of r. Therefore $H^i_{\mathfrak{a}}(M) = 0$. This completes the inductive step, and the proof. □

The next theorem can be regarded as a companion to Grothendieck's Vanishing Theorem, because it shows that, in some circumstances, this Vanishing Theorem is best possible. The method of proof employed here uses the powerful technique of reduction to the case where the local ring concerned is a complete local domain. The argument is fairly sophisticated, as it relies on ideas related to the structure theorems for complete local rings. Some readers might like to be informed now that a different proof of the following theorem is provided in Chapter 7. We preface the theorem with an elementary remark.

6.1.3 Remark. Let R' be a second commutative Noetherian ring and let $f : R \to R'$ be a flat ring homomorphism. Let M be a non-zero, finitely generated R-module, generated by $m_1, \ldots, m_t$, say; set $\mathfrak{c} = (0 :_R M)$.

There is an exact sequence

$$0 \longrightarrow \mathfrak{c} \xrightarrow{\subseteq} R \xrightarrow{h} Rm_1 \oplus \cdots \oplus Rm_t$$

of R-modules and R-homomorphisms, where $h(r) = (rm_1, \ldots, rm_t)$ for all $r \in R$. Since R' is a flat R-module, the induced sequence

$$0 \longrightarrow \mathfrak{c} \otimes_R R' \longrightarrow R \otimes_R R' \xrightarrow{h\otimes_R R'} (Rm_1 \oplus \cdots \oplus Rm_t) \otimes_R R'$$

is again exact, and so it follows easily from the additivity of the tensor product functor that the sequence

$$0 \longrightarrow \mathfrak{c}R' \xrightarrow{\subseteq} R' \xrightarrow{h'} (Rm_1 \otimes_R R') \oplus \cdots \oplus (Rm_t \otimes_R R'),$$

where $h'(r') = (m_1 \otimes r', \ldots, m_t \otimes r')$ for all $r' \in R'$, is exact. We thus deduce that $\mathfrak{c}R' = (0 :_{R'} (M \otimes_R R'))$.

It follows that, in particular, if $(R, \mathfrak{m})$ is local with ($\mathfrak{m}$-adic) completion $\widehat{R}$, and M is a non-zero, finitely generated R-module, then

$$\dim_R M = \dim R/\mathfrak{c} = \dim \widehat{R}/\mathfrak{c}\widehat{R} = \dim_{\widehat{R}}(M \otimes_R \widehat{R}).$$

6.1.4 The Non-vanishing Theorem. *Assume that $(R, \mathfrak{m})$ is local, and let M be a non-zero, finitely generated R-module of dimension n. Then $H^n_{\mathfrak{m}}(M) \neq 0$.*

Proof. Let $\widehat{R}$ denote the ($\mathfrak{m}$-adic) completion of R. Since the natural ring homomorphism $R \to \widehat{R}$ is (faithfully) flat, it follows from the Flat Base Change Theorem 4.3.2 that there is an $\widehat{R}$-isomorphism

$$H^n_{\mathfrak{m}}(M) \otimes_R \widehat{R} \cong H^n_{\mathfrak{m}\widehat{R}}(M \otimes_R \widehat{R}),$$

and so it is enough for us to show that $H^n_{\mathfrak{m}\widehat{R}}(M \otimes_R \widehat{R}) \neq 0$. Of course, $\mathfrak{m}\widehat{R}$ is the maximal ideal of the local ring $\widehat{R}$, and $M \otimes_R \widehat{R}$ is a non-zero, finitely generated $\widehat{R}$-module; also 6.1.3 shows that this $\widehat{R}$-module has dimension n. Consequently, we can, and do, assume henceforth in this proof that R is complete.

Let $\mathfrak{p}$ be a minimal member of $\operatorname{Supp}(M)$ for which $\dim R/\mathfrak{p} = n$. Since $\dim(\mathfrak{p}M) < n+1$, it follows from Grothendieck's Vanishing Theorem 6.1.2 that the natural epimorphism $M \to M/\mathfrak{p}M$ induces an epimorphism

$$H^n_{\mathfrak{m}}(M) \to H^n_{\mathfrak{m}}(M/\mathfrak{p}M),$$

and so it is sufficient for us to show that $H^n_{\mathfrak{m}}(M/\mathfrak{p}M) \neq 0$.

Now, since

$$\sqrt{(0 :_R M/\mathfrak{p}M)} = \sqrt{\mathfrak{p} + (0 :_R M)} = \mathfrak{p}$$

(by [60, 9.23], for example), we can deduce that $(0 :_R M/\mathfrak{p}M) = \mathfrak{p}$. Hence $\dim_R(M/\mathfrak{p}M) = n$, and so, when we regard $M/\mathfrak{p}M$ as an $R/\mathfrak{p}$-module in the natural way, it is faithful, finitely generated, and of dimension n. Also, by the Independence Theorem 4.2.1,

$$H^n_{\mathfrak{m}}(M/\mathfrak{p}M) \cong H^n_{\mathfrak{m}/\mathfrak{p}}(M/\mathfrak{p}M)$$

as R-modules. Since $R/\mathfrak{p}$ is a complete local domain, it follows that it is enough for us to prove the result under the additional assumptions that R is a complete local domain and that M is a faithful R-module.

At this point, we appeal to the structure theory of complete local rings: by [35, Theorem 29.4], there exists a complete regular local subring $(R', \mathfrak{m}')$ of R which is such that R is finitely generated as an R'-module. Since R is integral over R', it follows that $\mathfrak{m}$ is the one and only prime ideal of R which has contraction to R' equal to $\mathfrak{m}'$. Hence $\sqrt{(\mathfrak{m}'R)} = \mathfrak{m}$, and so it follows from 1.1.3 and the Independence Theorem 4.2.1 that

$$H^n_{\mathfrak{m}}(M) = H^n_{\mathfrak{m}'R}(M) \cong H^n_{\mathfrak{m}'}(M)$$

as R'-modules. It is thus sufficient for us to show that $H^n_{\mathfrak{m}'}(M) \neq 0$. Obviously, M is faithful and finitely generated as R'-module. Moreover, $\dim R' = \dim R = n$ (since R is integral over R'). We can therefore replace R by R' and thus assume that R is a complete regular local ring during the remainder of this proof.

Next, let, for each R-module G,

$$\tau(G) := \{g \in G : \text{ there exists } r \in R \setminus \{0\} \text{ such that } rg = 0\},$$

a submodule of G. Note that $(0 : \tau(M)) \neq 0$, and so $\tau(M)$ has dimension less than n. Another use of Grothendieck's Vanishing Theorem 6.1.2 shows that the natural epimorphism $M \to M/\tau(M)$ induces an isomorphism

$$H^n_{\mathfrak{m}}(M) \to H^n_{\mathfrak{m}}(M/\tau(M)),$$

and so it is sufficient for us to show that $H^n_{\mathfrak{m}}(M/\tau(M)) \neq 0$. Note that $\tau(M/\tau(M)) = 0$ and that $M/\tau(M)$ still has dimension n (as its annihilator is 0). Therefore we can, and do, assume that $\tau(M) = 0$.

Let K be the field of fractions of R, and note that, since $\tau(M) = 0$, the natural R-homomorphism $M \to M \otimes_R K$ is injective. Let t denote the (torsion-free) rank of M as an R-module, that is, the vector space dimension $\dim_K(M \otimes_R K)$. There exists $r \in R \setminus \{0\}$ such that M, as R-module, can be embedded in the submodule

$$R\frac{1}{r} \oplus \cdots \oplus R\frac{1}{r} \ (t \text{ copies}) \qquad \text{of} \qquad K \oplus \cdots \oplus K \ (t \text{ copies}).$$

But $R\frac{1}{r} \cong R$, and so there is a free R-module F of rank t and an R-monomorphism $h : M \to F$; also, since $h \otimes_R K : M \otimes_R K \to F \otimes_R K$ must be a K-monomorphism between t-dimensional vector spaces over K, and therefore an isomorphism, it follows that $\dim(\operatorname{Coker} h) < n$. It therefore follows from Grothendieck's Vanishing Theorem 6.1.2 that h induces an exact sequence $H^n_{\mathfrak{m}}(M) \longrightarrow H^n_{\mathfrak{m}}(F) \longrightarrow 0$. Now since R is a regular local ring, it follows from 4.2.5 that $H^n_{\mathfrak{m}}(R) \neq 0$; finally, we deduce from the additivity of the functor $H^n_{\mathfrak{m}}$ that $H^n_{\mathfrak{m}}(F) \neq 0$. Hence $H^n_{\mathfrak{m}}(M) \neq 0$ and this completes the proof. □

6.1.5 Exercise. Suppose that M is a finitely generated R-module for which $M \neq \mathfrak{a}M$. Show that there exists $i \in \mathbb{N}_0$ for which $H^i_{\mathfrak{a}}(M) \neq 0$.

6.1.6 ♯Exercise. Assume that $(R, \mathfrak{m})$ is local, and let M be a non-zero, finitely generated R-module of dimension $n > 0$. Show that $H^n_{\mathfrak{m}}(M)$ is not finitely generated. (Here are some hints: use $M/\Gamma_{\mathfrak{m}}(M)$ to see that one can make the additional assumption that M is an $\mathfrak{m}$-torsion-free R-module; use 2.1.1(ii) to see that, then, $\mathfrak{m}$ contains an element r which is a non-zerodivisor on M; note that, if $H^n_{\mathfrak{m}}(M)$ were finitely generated, then there would exist $t \in \mathbb{N}$ such that $r^t H^n_{\mathfrak{m}}(M) = 0$; and consider the long exact sequence of local cohomology modules induced by the exact sequence $0 \longrightarrow M \xrightarrow{r^t} M \longrightarrow M/r^tM \longrightarrow 0$ in order to obtain a contradiction.)

6.1.7 Exercise. Provide an example to show that the result of Theorem 6.1.4 is not always true if the hypothesis that M be finitely generated is omitted.

6.1.8 ♯Exercise. Let $T : \mathscr{C}(R) \longrightarrow \mathscr{C}(R)$ be an R-linear covariant functor. For each R-module M, and each $g \in M$, let $\mu_{g,M} : R \to M$ be the R-homomorphism for which $\mu_{g,M}(r) = rg$ for all $r \in R$.

Show that there is a natural transformation of functors

$$\theta : (\,\cdot\,) \otimes_R T(R) \longrightarrow T$$

(from $\mathscr{C}(R)$ to $\mathscr{C}(R)$) which is such that, for each R-module M,

$$\theta_M(g \otimes z) = T(\mu_{g,M})(z) \qquad \text{for all } g \in M \text{ and } z \in T(R).$$

Show also that θ_F is an isomorphism whenever F is a finitely generated free R-module, and deduce that, if T is right exact, then θ_M is an isomorphism whenever M is a finitely generated R-module.

6.1.9 ♯Exercise. Assume that $\dim R = n$. Use Exercise 6.1.8 to prove that $H^n_{\mathfrak{a}}$ is naturally equivalent to $(\,\cdot\,) \otimes_R H^n_{\mathfrak{a}}(R)$.

6.2 Connections with grade

It is now time for us to explore in detail connections, already hinted at in Exercise 1.3.9, between regular sequences and local cohomology. To set the scene, and clarify precisely what background information the reader will require for this work, we begin by recalling the definition of 'M-sequence' and quoting, without proof, two results from Matsumura [35]; however, we shall use terminology different from his.

6.2.1 Definition. (See [35, p. 123].) Let M be an R-module and let $a_1, \ldots, a_n \in R$. We say that the sequence $a_1, \ldots, a_n$ is a *poor M-sequence* precisely when

(i) a_1 is a non-zerodivisor on M and, for each $i = 2, \ldots, n$, the element a_i is a non-zerodivisor on $M / \sum_{j=1}^{i-1} a_j M$.

Furthermore, $a_1, \ldots, a_n$ is said to be an *M-sequence*, or an *M-regular sequence*, precisely when it is a poor M-sequence, that is, it satisfies condition (i) above, and, in addition,

(ii) $\sum_{j=1}^{n} a_j M \neq M$.

6.2.2 Theorem. (See [35, Theorem 16.6].) *Let M be a finitely generated R-module such that $\mathfrak{a}M \neq M$; let $n \in \mathbb{N}$. Then the following statements are equivalent:*

(i) $\mathrm{Ext}_R^i(G, M) = 0$ *for all $i < n$ and each finitely generated R-module G for which* $\mathrm{Supp}(G) \subseteq \mathrm{Var}(\mathfrak{a})$;

(ii) $\mathrm{Ext}_R^i(R/\mathfrak{a}, M) = 0$ *for all $i < n$;*

(iii) *there is a finitely generated R-module G with* $\mathrm{Supp}(G) = \mathrm{Var}(\mathfrak{a})$ *for which* $\mathrm{Ext}_R^i(G, M) = 0$ *for all $i < n$; and*

(iv) *there exists an M-sequence of length n contained in $\mathfrak{a}$.* □

Ideas involved in Theorem 6.2.2 can be adapted to prove the result in the following exercise, which is often useful.

6.2.3 ♯Exercise. Let N be an R-module (note that it is not assumed that N is finitely generated) such that there exists a poor N-sequence of length n contained in $\mathfrak{a}$. Show that $\mathrm{Ext}_R^i(G, N) = 0$ for all $i < n$ and each finitely generated R-module G for which $\mathrm{Supp}(G) \subseteq \mathrm{Var}(\mathfrak{a})$.

Observe that, with the notation of 6.2.2, every M-sequence contained in $\mathfrak{a}$ (even the empty one!) can be extended to a maximal one, since otherwise, as $\mathfrak{a}M \neq M$, there would exist an infinite sequence $(b_i)_{i \in \mathbb{N}}$ of elements of $\mathfrak{a}$ such that $b_1, \ldots, b_n$ is an M-sequence for all $n \in \mathbb{N}$, and this would lead to an infinite strictly ascending chain

$$(b_1) \subset (b_1, b_2) \subset \ldots \subset (b_1, \ldots, b_n) \subset \ldots$$

of ideals of R. We incorporate this observation into the next theorem, which is otherwise taken from Matsumura [35].

6.2.4 Theorem and Definition. (See [35, Theorem 16.7].) *Let M be a finitely generated R-module such that $\mathfrak{a}M \neq M$.*

(i) *There exists an M-sequence contained in $\mathfrak{a}$ which cannot be extended to a longer one by the addition of an extra term (such a sequence will henceforth be referred to as a* maximal M-sequence contained in $\mathfrak{a}$*).*

(ii) *Every M-sequence contained in $\mathfrak{a}$ can be extended to a maximal one.*

(iii) *All maximal M-sequences contained in $\mathfrak{a}$ have the same length, namely the least integer i such that* $\operatorname{Ext}^i_R(R/\mathfrak{a}, M) \neq 0$.

*We shall refer to the common length of all maximal M-sequences contained in $\mathfrak{a}$ as the M-*grade of $\mathfrak{a}$, *and we shall denote this non-negative integer by* $\operatorname{grade}_M \mathfrak{a}$. □

6.2.5 Notes. (i) If the ideal $\mathfrak{a}$ is proper, then the R-grade of $\mathfrak{a}$ is defined: we shall follow Rees's original terminology [49] and refer to this simply as the *grade of* $\mathfrak{a}$, and we shall denote it by $\operatorname{grade} \mathfrak{a}$.

(ii) Suppose that $(R, \mathfrak{m})$ is local, and that M is a non-zero finitely generated R-module. Then it follows from Nakayama's Lemma that $\mathfrak{m}M \neq M$, and so $\operatorname{grade}_M \mathfrak{m}$ is defined: this is referred to as the *depth of* M, and denoted by $\operatorname{depth} M$ or $\operatorname{depth}_R M$. Since every M-sequence must be contained in $\mathfrak{m}$, we see that $\operatorname{depth} M$ is equal to the common length of all maximal M-sequences.

6.2.6 Exercise. Let M be an R-module and let $i \in \mathbb{N}_0$. Show that

$$\operatorname{Supp}\left(H^i_{\mathfrak{a}}(M)\right) \subseteq \operatorname{Supp}(M) \cap \operatorname{Var}(\mathfrak{a}).$$

Deduce that, if M is finitely generated and $\mathfrak{a}M = M$, then $H^j_{\mathfrak{a}}(M) = 0$ for all $j \in \mathbb{N}_0$.

6.2.7 Theorem. *Let M be a finitely generated R-module such that $\mathfrak{a}M \neq M$. Then* $\operatorname{grade}_M \mathfrak{a}$ *is the least integer i such that $H^i_{\mathfrak{a}}(M) \neq 0$.*

Proof. Let $g := \operatorname{grade}_M \mathfrak{a}$. We use induction on g. When $g = 0$, every element of $\mathfrak{a}$ must be a zerodivisor on M, and so $\Gamma_{\mathfrak{a}}(M) \neq 0$ by 2.1.1(ii). Now suppose that $g > 0$ and that the result has been proved for each finitely generated R-module N with $\mathfrak{a}N \neq N$ and $\operatorname{grade}_N \mathfrak{a} < g$.

There exists $a_1 \in \mathfrak{a}$ such that a_1 is a non-zerodivisor on M. Set $M_1 := M/a_1M$, and observe that ($\mathfrak{a}M_1 \neq M_1$ and) $\operatorname{grade}_{M_1} \mathfrak{a} = g-1$. Therefore, by the inductive hypothesis, $H^i_{\mathfrak{a}}(M_1) = 0$ for all $i < g-1$, while $H^{g-1}_{\mathfrak{a}}(M_1) \neq 0$. The exact sequence $0 \longrightarrow M \xrightarrow{a_1} M \longrightarrow M_1 \longrightarrow 0$ induces, for each $i \in \mathbb{N}$, an exact sequence

$$H^{i-1}_{\mathfrak{a}}(M) \longrightarrow H^{i-1}_{\mathfrak{a}}(M_1) \longrightarrow H^i_{\mathfrak{a}}(M) \xrightarrow{a_1} H^i_{\mathfrak{a}}(M).$$

This shows that, for $i < g$, the element a_1 is a non-zerodivisor on $H^i_{\mathfrak{a}}(M)$, so that, since this module is $\mathfrak{a}$-torsion, it must be zero. We therefore have an exact sequence $0 \longrightarrow H^{g-1}_{\mathfrak{a}}(M_1) \longrightarrow H^g_{\mathfrak{a}}(M)$, and since $H^{g-1}_{\mathfrak{a}}(M_1) \neq 0$, it follows that $H^g_{\mathfrak{a}}(M) \neq 0$. □

6.2.8 Corollary. *Assume that $(R, \mathfrak{m})$ is local, and let M be a non-zero, finitely generated R-module. Then any integer i for which $H^i_{\mathfrak{m}}(M) \neq 0$ must satisfy*

$$\operatorname{depth} M \leq i \leq \dim M,$$

while for i at either extremity of this range we do have $H^i_{\mathfrak{m}}(M) \neq 0$.

Proof. This is now immediate from Grothendieck's Vanishing Theorem 6.1.2, the Non-vanishing Theorem 6.1.4 and the above 6.2.7, because $M \neq \mathfrak{m}M$ by Nakayama's Lemma, and $\operatorname{depth} M = \operatorname{grade}_M \mathfrak{m}$. □

6.2.9 Corollary. *Assume that $(R, \mathfrak{m})$ is local, and let M be a non-zero, finitely generated R-module. Then there is exactly one integer i for which $H^i_{\mathfrak{m}}(M) \neq 0$ if and only if* $\operatorname{depth} M = \dim M$, *that is, if and only if M is a Cohen-Macaulay R-module (see* [35, p. 134]*).*

In particular, if $(R, \mathfrak{m})$ is a regular local ring of dimension n, then n is the unique integer i for which $H^i_{\mathfrak{m}}(R) \neq 0$. □

6.2.10 Remark. Let M be a finitely generated R-module such that $\mathfrak{a}M \neq M$. It is immediate from Theorems 2.2.4(i)(c) and 6.2.7 that $\eta_M : M \to D_{\mathfrak{a}}(M)$ is an isomorphism if and only if $\operatorname{grade}_M \mathfrak{a} \geq 2$.

6.2.11 Exercise. Let $T : \mathscr{C}(R) \longrightarrow \mathscr{C}(R)$ be an R-linear covariant functor with the property that $T(M)$ is $\mathfrak{a}$-torsion for every R-module M.

(i) Show that, for each R-module M, the result $\mathscr{R}^i T(M)$ of applying the i-th right derived functor of T to M is again $\mathfrak{a}$-torsion.

(ii) Assume, in addition, that T is left exact and such that, for each finitely generated R-module M, the ideal $\mathfrak{a}$ contains a non-zerodivisor on M if and only if $T(M) = 0$. Let $r \in \mathbb{N}_0$, and let M be a finitely generated R-module such that $\mathfrak{a}M \neq M$. Prove that $\mathscr{R}^i T(M) = 0$ for all integers $i < r$ if and only if $\mathfrak{a}$ contains an M-sequence of length r.

(iii) Use part (ii) applied to the functor $\operatorname{Hom}_R(R/\mathfrak{a}, \cdot\,)$ to reprove the equivalence of statements (ii) and (iv) in Theorem 6.2.2.

(iv) Use part (ii) applied to the functor $\Gamma_{\mathfrak{a}}$ to prove the result of 6.2.7.

Corollary 6.2.8 raises the following question: if J is any prescribed finite non-empty set of non-negative integers, does there exist a local ring $(R', \mathfrak{m}')$ having the property that $H^i_{\mathfrak{m}'}(R') \neq 0$ if and only if $i \in J$? An affirmative answer to this question was provided by I. G. Macdonald [31], and the next two exercises sketch the essence of his argument.

6.2.12 Exercise. Assume that $(R, \mathfrak{m})$ is local, and let M be a finitely generated R-module.

(i) Show that the Abelian group $R \oplus M$ has the structure of a commutative ring (with identity) with respect to multiplication defined by

$$(r_1, m_1)(r_2, m_2) = (r_1 r_2, r_1 m_2 + r_2 m_1) \qquad \text{for all } (r_1, m_1), (r_2, m_2) \in R \oplus M.$$

(This ring is sometimes called the *trivial extension of* R *by* M.)

(ii) Show that the ring $R \oplus M$ is Noetherian, and that its nilradical contains $0 \oplus M$ $(= M)$.

(iii) Show that the ring $R \oplus M$ is local with maximal ideal $\mathfrak{m} \oplus M$, and that $\dim(R \oplus M) = \dim R$.

6.2.13 Exercise. Let h, n be integers such that $0 \leq h \leq n$, and let J be an arbitrary set of integers such that $\{h, n\} \subseteq J \subseteq \{i \in \mathbb{N}_0 : h \leq i \leq n\}$. Let $(R, \mathfrak{m})$ be a regular local ring of dimension n, and let $u_1, \ldots, u_n$ be n elements which generate the maximal ideal $\mathfrak{m}$. For each $j = 0, \ldots, n-1$, let $\mathfrak{p}_j = Ru_{j+1} + \cdots + Ru_n$. Set

$$M := \bigoplus_{j \in J \setminus \{n\}} R/\mathfrak{p}_j.$$

(i) Show that, for $i \in \mathbb{N}_0$, we have $H^i_{\mathfrak{m}}(M) \neq 0$ if and only if $i \in J \setminus \{n\}$.

(ii) Let $R' := R \oplus M$, the trivial extension of R by M of Exercise 6.2.12 above. By that exercise, R' is a local ring, with maximal ideal $\mathfrak{m}' := \mathfrak{m} \oplus M$. The ring homomorphism $\psi : R \oplus M \to R$ for which $\psi((r, m)) = r$ for all $(r, m) \in R \oplus M$ enables us to regard both R and M as R'-modules. Use the exact sequence $0 \longrightarrow M \xrightarrow{q} R \oplus M \xrightarrow{\psi} R \longrightarrow 0$ of R'-modules (in which q is the canonical injection) to show that, for $i \in \mathbb{N}_0$, we have $H^i_{\mathfrak{m}'}(R') \neq 0$ if and only if $i \in J$.

6.2.14 Exercise. Let M be an R-module, and let $a_1, \ldots, a_n \in R$ be such that $M \neq (a_1, \ldots, a_n)M$. Prove that $a_1, \ldots, a_n$ is an M-sequence if and only if

$$H^{i-1}_{(a_1, \ldots, a_i)}(M) = 0 \qquad \text{for all } i = 1, \ldots, n.$$

(Here are some hints for the implication '$\Leftarrow$'. Use induction on n: for the inductive step, on the assumption that $n > 1$ and the result has been proved for smaller values of n, use Exercise 1.3.9(iv) (in conjunction with the hypotheses) to help you prove that

$$H^{i-2}_{(a_1, \ldots, a_i)}(M/a_1 M) = 0 \qquad \text{for all } i = 2, \ldots, n;$$

then use the Independence Theorem 4.2.1 to deduce that

$$H^{i-2}_{(a_2,\dots,a_i)}(M/a_1M) = 0 \qquad \text{for all } i = 2,\dots,n.)$$

6.2.15 Exercise. Let $(R, \mathfrak{m})$ be a regular local ring of dimension $d \geq 2$, and let $u_1,\dots,u_d$ be d elements which generate $\mathfrak{m}$. Let $t \in \mathbb{N}_0$ with $t < d-1$, and let $\mathfrak{p} = Ru_1 + \cdots + Ru_t$, a prime ideal of R. Let M denote the R-module $R_{\mathfrak{p}}/R$.

(i) Show that $\mathfrak{p}M \neq M$.

(ii) Show that $u_1,\dots,u_t$ is a maximal M-sequence contained in $\mathfrak{m}$.

(iii) Show that the least integer i such that $H^i_{\mathfrak{m}}(M) \neq 0$ is $d-1$.

Contrast this with the situation for finitely generated R-modules!

6.2.16 Exercise. Let $(R, \mathfrak{m})$ be a regular local ring of dimension $d > 2$, let K denote the quotient field of R, and let $N := R \oplus K/R$.

Show that $\mathfrak{m}N \neq N$, that $\mathfrak{m}$ consists entirely of zerodivisors on N, and that $\eta_N : N \to D_{\mathfrak{m}}(N)$ is an isomorphism. Compare this with the situation for finitely generated R-modules described in 6.2.10.

6.3 Exactness of ideal transforms

This section prepares the ground for our presentation, in the next section, of the promised special case of Serre's Affineness Criterion. Central to this preparation are various necessary and sufficient conditions for the exactness of the $\mathfrak{a}$-transform functor $D_{\mathfrak{a}}$; some of these were presented by P. Schenzel in [54].

6.3.1 Lemma. *The following statements are equivalent:*

(i) *the $\mathfrak{a}$-transform functor $D_{\mathfrak{a}}$ is exact;*

(ii) $H^i_{\mathfrak{a}}(R) = 0$ *for all* $i \geq 2$;

(iii) $H^2_{\mathfrak{a}}(M) = 0$ *for each finitely generated R-module M;*

(iv) $H^2_{\mathfrak{a}}(M) = 0$ *for each R-module M.*

Proof. (i) $\Rightarrow$ (ii) By 2.2.4(ii), for each $i \in \mathbb{N}$, the i-th right derived functor $\mathscr{R}^iD_{\mathfrak{a}}$ of $D_{\mathfrak{a}}$ is naturally equivalent to $H^{i+1}_{\mathfrak{a}}$. Now exactness of $D_{\mathfrak{a}}$ implies that $\mathscr{R}^iD_{\mathfrak{a}}(R) = 0$ for all $i \in \mathbb{N}$; therefore $H^i_{\mathfrak{a}}(R) = 0$ for all $i \geq 2$.

(ii) $\Rightarrow$ (iii) Let $\operatorname{ara}(\mathfrak{a}) = t$. By 3.3.3, for every R-module M, we have $H^i_{\mathfrak{a}}(M) = 0$ for all $i > t$. We now argue by descending induction on i. Suppose that $i \in \mathbb{N}$ with $i > 2$, and we have proved that $H^i_{\mathfrak{a}}(M') = 0$ for each finitely generated R-module M'; let M be an arbitrary finitely generated R-module. There exists an exact sequence

$$0 \longrightarrow N \longrightarrow F \longrightarrow M \longrightarrow 0$$

of finitely generated R-modules and R-homomorphisms in which F is free. This induces an exact sequence $H_{\mathfrak{a}}^{i-1}(F) \longrightarrow H_{\mathfrak{a}}^{i-1}(M) \longrightarrow H_{\mathfrak{a}}^{i}(N)$. Since $i-1 \geq 2$, it follows from the additivity of the $(i-1)$-th local cohomology functor and condition (ii) that $H_{\mathfrak{a}}^{i-1}(F) = 0$; since $H_{\mathfrak{a}}^{i}(N) = 0$ by our inductive assumption, we can deduce that $H_{\mathfrak{a}}^{i-1}(M) = 0$. This completes the inductive step. Hence statement (iii) is proved by descending induction.

(iii) $\Rightarrow$ (iv) This is immediate from the fact (3.4.10) that $H_{\mathfrak{a}}^{2}$ commutes with direct limits, because each R-module can be viewed as the direct limit of its finitely generated submodules.

(iv) $\Rightarrow$ (i) By 2.2.4(ii), the first right derived functor $\mathscr{R}^1 D_{\mathfrak{a}}$ of $D_{\mathfrak{a}}$ is naturally equivalent to $H_{\mathfrak{a}}^{2}$. It therefore follows from statement (iv) (and the left exactness of $D_{\mathfrak{a}}$) that $D_{\mathfrak{a}}$ is exact. □

6.3.2 Exercise. Assume that $\operatorname{ht} \mathfrak{p} = 1$ for every minimal prime ideal $\mathfrak{p}$ of $\mathfrak{a}$, and that $R_{\mathfrak{q}}$ is a UFD for each prime ideal $\mathfrak{q}$ of R which contains $\mathfrak{a}$. Prove that $D_{\mathfrak{a}} : \mathscr{C}(R) \to \mathscr{C}(R)$ is exact.

6.3.3 Remark. Let R' be a second commutative Noetherian ring and let $f : R \to R'$ be a ring homomorphism. Suppose that the $\mathfrak{a}$-transform functor $D_{\mathfrak{a}}$ is exact. Then since the restriction functor $\lceil_R : \mathscr{C}(R') \to \mathscr{C}(R)$ is exact and, by 2.2.21, there is a natural equivalence of functors

$$\varepsilon : D_{\mathfrak{a}R'}(\,\cdot\,)\lceil_R \longrightarrow D_{\mathfrak{a}}(\,\cdot\,\lceil_R),$$

it follows that the $\mathfrak{a}R'$-transform functor $D_{\mathfrak{a}R'} : \mathscr{C}(R') \to \mathscr{C}(R')$ is also exact.

Recall from Exercise 2.2.3 that $D_{\mathfrak{a}}(R)$ has a natural structure as a commutative ring with identity, and from Exercise 2.2.10 that $\eta_R : R \to D_{\mathfrak{a}}(R)$ is a ring homomorphism. Thus we can regard $D_{\mathfrak{a}}(R)$ as an R-algebra by means of η_R. Our next proposition is concerned with this R-algebra structure.

6.3.4 Proposition. *Suppose that $\mathfrak{a}D_{\mathfrak{a}}(R) = D_{\mathfrak{a}}(R)$. Then $D_{\mathfrak{a}}(R)$ is a finitely generated R-algebra.*

Proof. Note that $\Gamma_{\mathfrak{a}}(R) = R$ if and only if $\mathfrak{a}$ is nilpotent, and that in this case $\Gamma_{\mathfrak{a}}$ is the identity functor, so that $D_{\mathfrak{a}}(R) = 0$ by 2.2.4(i)(c) and the claim is clear in this case. We therefore suppose henceforth in this proof that $\Gamma_{\mathfrak{a}}(R) \neq R$.

Set $\overline{R} := R/\Gamma_{\mathfrak{a}}(R)$. We mentioned just before the statement of the proposition that $\eta_R : R \longrightarrow D_{\mathfrak{a}}(R)$ is a ring homomorphism. By 2.2.4(i)(c), we have $\operatorname{Ker}(\eta_R) = \Gamma_{\mathfrak{a}}(R)$, and so η_R induces an injective ring homomorphism $\theta_R : \overline{R} \longrightarrow D_{\mathfrak{a}}(R)$. Moreover, as $\operatorname{Coker}(\eta_R) \cong H_{\mathfrak{a}}^{1}(R)$ by 2.2.4(i)(c), the $\overline{R}$-module $\operatorname{Coker}(\theta_R)$ is $\overline{\mathfrak{a}}$-torsion, where $\overline{\mathfrak{a}} := \mathfrak{a}\overline{R}$, the extension of $\mathfrak{a}$ to $\overline{R}$.

Therefore, by 2.2.14, the unique $\overline{R}$-homomorphism $\psi : D_{\mathfrak{a}}(R) \longrightarrow D_{\overline{\mathfrak{a}}}(\overline{R})$ such that the diagram

$$\begin{tikzcd} \overline{R} \arrow[r, "\theta_R"] \arrow[dr, "\eta_{\overline{\mathfrak{a}},\overline{R}}"'] & D_{\mathfrak{a}}(R) \arrow[d, "\psi"] \\ & D_{\overline{\mathfrak{a}}}(\overline{R}) \end{tikzcd}$$

commutes is a ring homomorphism. Furthermore, by the Independence Theorem 4.2.1, we have $\mathrm{H}^i_{\overline{\mathfrak{a}}}(\mathrm{D}_{\mathfrak{a}}(\mathrm{R})) \cong \mathrm{H}^i_{\mathfrak{a}}(\mathrm{D}_{\mathfrak{a}}(\mathrm{R}))$ for all $i \in \mathbb{N}_0$, and so $\mathrm{H}^i_{\overline{\mathfrak{a}}}(\mathrm{D}_{\mathfrak{a}}(\mathrm{R})) = 0$ for $i = 0, 1$ by 2.2.8(iv). Hence, in view of 2.2.13(iii), the map ψ is a ring isomorphism. Therefore $\overline{\mathfrak{a}}D_{\overline{\mathfrak{a}}}(\overline{R}) = D_{\overline{\mathfrak{a}}}(\overline{R})$, and, if we can show that $D_{\overline{\mathfrak{a}}}(\overline{R})$ is a finitely generated $\overline{R}$-algebra, then it will follow that $D_{\mathfrak{a}}(R)$ is a finitely generated R-algebra. Since $\Gamma_{\overline{\mathfrak{a}}}(\overline{R}) = 0$ (by 2.1.2), we therefore assume henceforth in this proof that $\Gamma_{\mathfrak{a}}(R) = 0$.

By 2.1.1(ii), this means that $\mathfrak{a}$ contains a non-zerodivisor s on R. Note that $\eta_R : R \to D_{\mathfrak{a}}(R)$ is injective, by 2.2.4(i)(c). We again use R_s to denote the ring of fractions of R with respect to the multiplicatively closed subset $\{s^i : i \in \mathbb{N}_0\}$. By 2.2.15, the subring $D := \bigcup_{n\in\mathbb{N}}(R :_{R_s} \mathfrak{a}^n)$ of R_s satisfies $\mathfrak{a}D = D$, and it will be sufficient for us to show that D is a finitely generated R-algebra.

Let $a_1, \ldots, a_t$ be t elements which generate $\mathfrak{a}$. Since $\mathfrak{a}D = D$, there exist $y_1, \ldots, y_t \in D$ such that $1 = \sum_{i=1}^t a_i y_i$. We aim to show that $D = R[y_1, \ldots, y_t]$. We achieve this by showing, by induction on n, that

$$(R :_{R_s} \mathfrak{a}^n) \subseteq R[y_1, \ldots, y_t] \qquad \text{for every } n \in \mathbb{N}_0.$$

This claim is clear for $n = 0$, and so we suppose that $n > 0$ and the claim has been proved for smaller values of n. Let $z \in (R :_{R_s} \mathfrak{a}^n)$. Note that

$$a_i z \in (R :_{R_s} \mathfrak{a}^{n-1}) \subseteq R[y_1, \ldots, y_t] \qquad \text{for all } i = 1, \ldots, t.$$

Thus $z = 1z = \sum_{i=1}^t a_i y_i z = \sum_{i=1}^t (a_i z) y_i \in R[y_1, \ldots, y_t]$, and the inductive step is complete.

Therefore $D = R[y_1, \ldots, y_t]$, as claimed, and $D_{\mathfrak{a}}(R)$ is a finitely generated R-algebra. □

In Lemma 6.3.1, we established several criteria for the exactness of the $\mathfrak{a}$-transform functor $D_{\mathfrak{a}}$. We are now in a position to prove a further such criterion.

6.3.5 Proposition. *The* $\mathfrak{a}$*-transform functor* $D_{\mathfrak{a}}$ *is exact if and only if* $\mathfrak{a}D_{\mathfrak{a}}(R) = D_{\mathfrak{a}}(R)$.

Proof. ($\Rightarrow$) Assume first that $D_{\mathfrak{a}}$ is exact. By 6.1.8, we have

$$D_{\mathfrak{a}}(R/\mathfrak{a}) \cong (R/\mathfrak{a}) \otimes_R D_{\mathfrak{a}}(R) \cong D_{\mathfrak{a}}(R)/\mathfrak{a}D_{\mathfrak{a}}(R).$$

Since $D_{\mathfrak{a}}(R/\mathfrak{a}) = 0$ by 2.2.8(i), we deduce that $\mathfrak{a}D_{\mathfrak{a}}(R) = D_{\mathfrak{a}}(R)$.

($\Leftarrow$) Assume now that $\mathfrak{a}D_{\mathfrak{a}}(R) = D_{\mathfrak{a}}(R)$. By Lemma 6.3.1, it is enough for us to show that $H^i_{\mathfrak{a}}(R) = 0$ for all $i \geq 2$; by Corollary 2.2.8(v), we have $H^i_{\mathfrak{a}}(R) \cong H^i_{\mathfrak{a}}(D_{\mathfrak{a}}(R))$ for all $i \geq 2$, and therefore it is enough for us to show that $H^i_{\mathfrak{a}}(D_{\mathfrak{a}}(R)) = 0$ for all $i \geq 2$.

By Proposition 6.3.4, the commutative R-algebra $D_{\mathfrak{a}}(R)$ is finitely generated, and therefore a Noetherian ring. Therefore, by the Independence Theorem 4.2.1,

$$H^i_{\mathfrak{a}}(D_{\mathfrak{a}}(R)) \cong H^i_{\mathfrak{a}D_{\mathfrak{a}}(R)}(D_{\mathfrak{a}}(R)) \qquad \text{for all } i \in \mathbb{N}_0.$$

However, the assumption that $\mathfrak{a}D_{\mathfrak{a}}(R) = D_{\mathfrak{a}}(R)$ means that $\Gamma_{\mathfrak{a}D_{\mathfrak{a}}(R)}$ is the zero functor, and so $H^i_{\mathfrak{a}D_{\mathfrak{a}}(R)}(D_{\mathfrak{a}}(R)) = 0$ for all $i \in \mathbb{N}_0$. This completes the proof. □

6.3.6 Corollary. *Assume that the* $\mathfrak{a}$*-transform functor* $D_{\mathfrak{a}}$ *is exact. Then* $\operatorname{ht}\mathfrak{p} \leq 1$ *for every minimal prime ideal* $\mathfrak{p}$ *of* $\mathfrak{a}$.

Proof. Suppose that $\mathfrak{p}$ is a minimal prime ideal of $\mathfrak{a}$ with $\operatorname{ht}\mathfrak{p} =: t \geq 2$, and look for a contradiction. Since $D_{\mathfrak{a}}$ is exact, it follows from Lemma 6.3.1 that $H^t_{\mathfrak{a}}(R) = 0$. Therefore, by 1.1.3 and 4.3.3,

$$H^t_{\mathfrak{p}R_{\mathfrak{p}}}(R_{\mathfrak{p}}) = H^t_{\mathfrak{a}R_{\mathfrak{p}}}(R_{\mathfrak{p}}) \cong (H^t_{\mathfrak{a}}(R))_{\mathfrak{p}} = 0.$$

However, this contradicts Theorem 6.1.4, since $\dim R_{\mathfrak{p}} = t$. □

6.3.7 ♯Exercise. Let $\mathfrak{c}$ be a second ideal of R, and suppose that $\mathfrak{c} \subseteq \mathfrak{a}$. Show that $D_{\mathfrak{c}}(\eta_{\mathfrak{a},(\,\bullet\,)}) : D_{\mathfrak{c}}(\,\bullet\,) \longrightarrow D_{\mathfrak{c}}(D_{\mathfrak{a}}(\,\bullet\,))$ is a natural equivalence of functors. (Here is a hint: you might find the argument used in the proof of 2.2.8(iii) helpful.)

6.3.8 Lemma. *Let* $\mathfrak{b}$ *be a second ideal of* R *and let* M *be an* R*-module. Then the* R*-homomorphism*

$$\alpha_{\mathfrak{a},\mathfrak{a}\mathfrak{b},D_{\mathfrak{b}}(M)} : D_{\mathfrak{a}}(D_{\mathfrak{b}}(M)) \longrightarrow D_{\mathfrak{a}\mathfrak{b}}(D_{\mathfrak{b}}(M))$$

(that is, the result of application of the natural transformation $\alpha_{\mathfrak{a},\mathfrak{a}\mathfrak{b}}$ *of* 2.2.20(i) *to the* R*-module* $D_{\mathfrak{b}}(M)$*) is an isomorphism.*

Proof. The diagram

$$\begin{tikzcd} D_{\mathfrak{b}}(M) \arrow[r, "\eta_{\mathfrak{a},D_{\mathfrak{b}}(M)}"] \arrow[d, equal] & D_{\mathfrak{a}}(D_{\mathfrak{b}}(M)) \arrow[d, "\alpha_{\mathfrak{a},\mathfrak{ab},D_{\mathfrak{b}}(M)}"] \\ D_{\mathfrak{b}}(M) \arrow[r, "\eta_{\mathfrak{ab},D_{\mathfrak{b}}(M)}"] & D_{\mathfrak{ab}}(D_{\mathfrak{b}}(M)) \end{tikzcd}$$

commutes. By 2.2.8(iv), we have $H^i_{\mathfrak{b}}(D_{\mathfrak{b}}(M)) = 0$ for $i = 0, 1$. Hence, by the Mayer-Vietoris Sequence 3.2.3, for $i = 0, 1$, there is an exact sequence

$$H^i_{\mathfrak{a}}(D_{\mathfrak{b}}(M)) \longrightarrow H^i_{\mathfrak{ab}}(D_{\mathfrak{b}}(M)) \longrightarrow H^{i+1}_{\mathfrak{a}+\mathfrak{b}}(D_{\mathfrak{b}}(M)),$$

so that $H^i_{\mathfrak{ab}}(D_{\mathfrak{b}}(M))$ is $\mathfrak{a}$-torsion. Hence, by 2.2.4(i)(c) and 2.2.13, there is a unique homomorphism $\theta : D_{\mathfrak{ab}}(D_{\mathfrak{b}}(M)) \longrightarrow D_{\mathfrak{a}}(D_{\mathfrak{b}}(M))$ such that the diagram

$$\begin{tikzcd} D_{\mathfrak{b}}(M) \arrow[r, "\eta_{\mathfrak{ab},D_{\mathfrak{b}}(M)}"] \arrow[d, equal] & D_{\mathfrak{ab}}(D_{\mathfrak{b}}(M)) \arrow[d, "\theta"] \\ D_{\mathfrak{b}}(M) \arrow[r, "\eta_{\mathfrak{a},D_{\mathfrak{b}}(M)}"] & D_{\mathfrak{a}}(D_{\mathfrak{b}}(M)) \end{tikzcd}$$

commutes. In fact, it is immediate from the uniqueness aspects of 2.2.13 that

$$\theta \circ \alpha_{\mathfrak{a},\mathfrak{ab},D_{\mathfrak{b}}(M)} = \mathrm{Id}_{D_{\mathfrak{a}}(D_{\mathfrak{b}}(M))} \qquad \text{and} \qquad \alpha_{\mathfrak{a},\mathfrak{ab},D_{\mathfrak{b}}(M)} \circ \theta = \mathrm{Id}_{D_{\mathfrak{ab}}(D_{\mathfrak{b}}(M))},$$

and so $\alpha_{\mathfrak{a},\mathfrak{ab},D_{\mathfrak{b}}(M)}$ is an isomorphism. □

6.3.9 Exercise. Let $\mathfrak{b}$ be a second ideal of R. Suppose that the functors $D_{\mathfrak{a}}$ and $D_{\mathfrak{b}}$ are both exact. Let $L \xrightarrow{g} M \xrightarrow{h} N$ be an exact sequence of R-modules and R-homomorphisms.

(i) Use 6.3.8 to show that the induced sequence

$$D_{\mathfrak{ab}}(D_{\mathfrak{b}}(L)) \xrightarrow{D_{\mathfrak{ab}}(D_{\mathfrak{b}}(g))} D_{\mathfrak{ab}}(D_{\mathfrak{b}}(M)) \xrightarrow{D_{\mathfrak{ab}}(D_{\mathfrak{b}}(h))} D_{\mathfrak{ab}}(D_{\mathfrak{b}}(N))$$

is exact.

(ii) Use 6.3.7(ii) to show that the induced sequence

$$D_{\mathfrak{ab}}(L) \xrightarrow{D_{\mathfrak{ab}}(g)} D_{\mathfrak{ab}}(M) \xrightarrow{D_{\mathfrak{ab}}(h)} D_{\mathfrak{ab}}(N)$$

is exact, and conclude that the functor $D_{\mathfrak{ab}}$ is exact.

6.4 An Affineness Criterion due to Serre

Although the main result of this section, 6.4.4, is, strictly speaking, only a special case of Serre's Affineness Criterion (see [56, §46, Corollaire 1]), we shall nevertheless refer to it as 'Serre's Affineness Criterion'.

6.4.1 Notation. In our discussion of Serre's Affineness Criterion, we shall use the following notation. We shall use V to denote an affine variety over the algebraically closed field K, and $\mathfrak{b}$ will denote a non-zero ideal of $\mathcal{O}(V)$; we shall use U to denote the quasi-affine variety $V \setminus V(\mathfrak{b})$, where $V(\mathfrak{b})$ is the closed subset of V determined by $\mathfrak{b}$.

Also, for an affine or quasi-affine variety W over K and a point $q \in W$, we shall frequently denote the maximal ideal $\{f \in \mathcal{O}(W) : f(q) = 0\}$ of $\mathcal{O}(W)$ by $I_W(q)$. The local ring of W at q will be denoted by $\mathcal{O}_{W,q}$.

6.4.2 Reminders. Let the notation be as in 6.4.1.

(i) The quasi-affine variety U is said to be *affine* precisely when there exists an affine variety W over K and an isomorphism of varieties $U \xrightarrow{\cong} W$.

(ii) Let W be an affine variety over K. If $\alpha : U \to W$ is a morphism of varieties, we shall denote by $\alpha^* : \mathcal{O}(W) \to \mathcal{O}(U)$ the homomorphism of K-algebras induced by α. Recall, from [22, Chapter I, Proposition 3.5] for example, that the correspondence $\alpha \mapsto \alpha^*$ provides a bijective map from the set of all morphisms of varieties $U \to W$ to the set of all K-algebra homomorphisms $\mathcal{O}(W) \to \mathcal{O}(U)$.

(iii) Let T be a closed subvariety of V, so that T is a closed, irreducible (and so necessarily non-empty) subset of V and the ideal

$$\mathfrak{p} := \{f \in \mathcal{O}(V) : f(t) = 0 \text{ for all } t \in T\}$$

of $\mathcal{O}(V)$ is prime. Recall that the *codimension of T in V*, denoted by $\operatorname{codim}_V T$, is given by

$$\operatorname{codim}_V T = \dim V - \dim T = \dim \mathcal{O}(V) - \dim \mathcal{O}(T) = \operatorname{ht}_{\mathcal{O}(V)} \mathfrak{p}.$$

(iv) Recall that a non-empty closed subset C of V is said to be *of pure codimension r in V* precisely when every irreducible component of C has codimension r in V.

(v) Let $u \in U$. With the natural identifications, we have

$$\mathcal{O}(V) \subseteq \mathcal{O}(U) \subseteq \mathcal{O}_{U,u} = \mathcal{O}(U)_{I_U(u)} \subseteq K(U) = K(V).$$

(vi) Finally, we recall that points on the quasi-affine variety U can be 'separated by regular functions'. More precisely, let $u_1, \ldots, u_r$ be r distinct

points of U and let $c_1, \ldots, c_r \in K$. Then there is a function $f \in \mathcal{O}(U)$ such that $f(u_i) = c_i$ for all $i = 1, \ldots, r$. In particular, if $u, u' \in U$ are such that $I_U(u) = I_U(u')$, then $u = u'$.

6.4.3 Lemma. *Let the notation be as in* 6.4.1, *and let W be an affine variety over K. Let $\alpha : U \to W$ be a surjective morphism of varieties for which $\alpha^* : \mathcal{O}(W) \to \mathcal{O}(U)$ is an isomorphism of K-algebras. Then α is an isomorphism of varieties.*

Proof. Let $w \in W$. Since α is surjective, there exists $u \in U$ with $\alpha(u) = w$. Now, for $f \in \mathcal{O}(W)$, we have $f(w) = f(\alpha(u)) = 0$ if and only if $(\alpha^*(f))(u) = 0$. It follows that $\alpha^*(I_W(w)) = I_U(u)$. This shows that $I_U(u)$ is uniquely determined by w. By 6.4.2(vi), it follows that there is exactly one $u \in U$ for which $\alpha(u) = w$. Hence α is bijective. It thus remains only for us to show that its inverse $\alpha^{-1} : W \to U$ is a morphism of varieties. For this, let U' be a non-empty open subset of U, and let $f \in \mathcal{O}(U')$: it is enough for us to show that $(\alpha^{-1})^{-1}(U') = \alpha(U')$ is an open subset of W and that $f \circ (\alpha^{-1}\restriction_{\alpha(U')}) : \alpha(U') \longrightarrow K$ is regular.

Before establishing these two points, we make one preparatory observation. For each $h \in \mathcal{O}(U)$, the regular function $(\alpha^*)^{-1}(h) \in \mathcal{O}(W)$ has the property that, for each $w \in W$,

$$\begin{aligned}\big((\alpha^*)^{-1}(h)\big)(w) &= \big((\alpha^*)^{-1}(h)\big)\big(\alpha(\alpha^{-1}(w))\big)\\ &= \alpha^*((\alpha^*)^{-1}(h))(\alpha^{-1}(w)) = h(\alpha^{-1}(w)).\end{aligned}$$

We now turn our attention to U'. There is a non-zero ideal $\mathfrak{c}$ of $\mathcal{O}(V)$ such that $U' = V \setminus V(\mathfrak{c})$. Thus, with the notation of 2.3.1, we have $U' = \bigcup_{g \in \mathfrak{c}} U_V(g)$. However, for each $g \in \mathfrak{c}$, we have

$$\begin{aligned}\alpha(U_V(g)) &= \alpha\big(\{v \in V : g(v) \neq 0\}\big)\\ &= \alpha\big(\{u \in U : (g\restriction_U)(u) \neq 0\}\big)\\ &= \{w \in W : (g\restriction_U)(\alpha^{-1}(w)) \neq 0\}\\ &= \{w \in W : \big((\alpha^*)^{-1}(g\restriction_U)\big)(w) \neq 0\}\end{aligned}$$

by the preceding paragraph; since $(\alpha^*)^{-1}(g\restriction_U)$ is a regular function on W, it follows that $\alpha(U_V(g))$ is an open subset of W. Hence $\alpha(U') = \bigcup_{g \in \mathfrak{c}} \alpha(U_V(g))$ is open too.

Next, let $w \in \alpha(U')$. Since $f \in \mathcal{O}(U')$, there exists an open subset U'' of U' with $\alpha^{-1}(w) \in U''$ and regular functions $h, k \in \mathcal{O}(U)$ such that k does not vanish on U'' and $f(p) = h(p)/k(p)$ for all $p \in U''$. It follows from the immediately preceding paragraph that $\alpha(U'')$ is an open subset of W that contains w, and from the paragraph before that that, for all $q \in \alpha(U'')$, we have

$\left((\alpha^*)^{-1}(k)\right)(q) = k(\alpha^{-1}(q)) \neq 0$ and

$$\left(f \circ (\alpha^{-1}\lceil_{\alpha(U')})\right)(q) = f(\alpha^{-1}(q)) = \frac{h(\alpha^{-1}(q))}{k(\alpha^{-1}(q))} = \frac{\left((\alpha^*)^{-1}(h)\right)(q)}{\left((\alpha^*)^{-1}(k)\right)(q)}.$$

Since $(\alpha^*)^{-1}(h)$ and $(\alpha^*)^{-1}(k)$ are regular functions on W, it follows that the function $f \circ (\alpha^{-1}\lceil_{\alpha(U')})$ is regular on $\alpha(U')$, as required. This completes the proof that $\alpha^{-1} : W \to U$ is a morphism of varieties. □

We are now ready to present Serre's Affineness Criterion.

6.4.4 Serre's Affineness Criterion. *Let the notation be as in* 6.4.1. *Then the following conditions are equivalent:*

(i) $U = V \setminus V(\mathfrak{b})$ *is affine;*
(ii) $D_{\mathfrak{b}} : \mathscr{C}(\mathscr{O}(V)) \longrightarrow \mathscr{C}(\mathscr{O}(V))$ *is exact;*
(iii) $H^i_{\mathfrak{b}}(\mathscr{O}(V)) = 0$ *for all* $i \geq 2$*;*
(iv) $H^2_{\mathfrak{b}}(M) = 0$ *for each finitely generated* $\mathscr{O}(V)$*-module* M*;*
(v) $H^2_{\mathfrak{b}}(M) = 0$ *for each* $\mathscr{O}(V)$*-module* M*;*
(vi) $\mathfrak{b}D_{\mathfrak{b}}(\mathscr{O}(V)) = D_{\mathfrak{b}}(\mathscr{O}(V))$.

Proof. The equivalence of the last five conditions (ii) – (vi) was established in 6.3.1 and 6.3.5. It only remains for us to establish that these are also equivalent to statement (i). Let $\iota : U \to V$ denote the inclusion morphism of varieties.

(i) $\Rightarrow$ (vi) Assume that U is affine, so that there is an affine variety W over K and an isomorphism of varieties $\alpha : U \xrightarrow{\cong} W$. Set $\beta := \iota \circ \alpha^{-1} : W \to V$. In view of 2.3.2, we therefore have a commutative diagram

$$\begin{tikzcd}
\mathscr{O}(V) \arrow[r, "\eta_{\mathscr{O}(V)}"] \arrow[d, "\beta^*"'] \arrow[dr, "\iota^*"] & D_{\mathfrak{b}}(\mathscr{O}(V)) \\
\mathscr{O}(W) \arrow[r, "\alpha^*", "\cong"'] & \mathscr{O}(U) \arrow[u, "\cong"', "\nu = \nu_{V,\mathfrak{b}}"]
\end{tikzcd}$$

of K-algebra homomorphisms. Let $\mathfrak{n}$ be a maximal ideal of $D_{\mathfrak{b}}(\mathscr{O}(V))$. Then

$$\eta^{-1}_{\mathscr{O}(V)}(\mathfrak{n}) = \iota^{*-1}(\nu^{-1}(\mathfrak{n})) = \beta^{*-1}(\alpha^{*-1}(\nu^{-1}(\mathfrak{n}))).$$

Now $\alpha^{*-1}(\nu^{-1}(\mathfrak{n}))$ is a maximal ideal of the ring $\mathscr{O}(W)$, and so there exists

$w \in W$ such that $\alpha^{*-1}(v^{-1}(\mathfrak{n})) = I_W(w)$. Hence

$$\eta_{\mathcal{O}(V)}^{-1}(\mathfrak{n}) = \beta^{*-1}(I_W(w)) = I_V(\beta(w)).$$

However, $\beta(w) = \iota(\alpha^{-1}(w)) \in U = V \setminus V(\mathfrak{b})$, and so

$$\mathfrak{b} \nsubseteq I_V(\beta(w)) = \eta_{\mathcal{O}(V)}^{-1}(\mathfrak{n}).$$

As this is true for each maximal ideal $\mathfrak{n}$ of $D_{\mathfrak{b}}(\mathcal{O}(V))$, it follows that $\mathfrak{b}D_{\mathfrak{b}}(\mathcal{O}(V)) = D_{\mathfrak{b}}(\mathcal{O}(V))$.

(vi) $\Rightarrow$ (i) Assume that $\mathfrak{b}D_{\mathfrak{b}}(\mathcal{O}(V)) = D_{\mathfrak{b}}(\mathcal{O}(V))$. Then $D_{\mathfrak{b}}(\mathcal{O}(V))$ is a finitely generated $\mathcal{O}(V)$-algebra, by 6.3.4. Moreover $D_{\mathfrak{b}}(\mathcal{O}(V))$ is an integral domain, and so there exists an affine variety W over K for which $\mathcal{O}(W) = D_{\mathfrak{b}}(\mathcal{O}(V))$. By 2.3.2, there is an $\mathcal{O}(V)$-isomorphism $v : \mathcal{O}(U) \xrightarrow{\cong} D_{\mathfrak{b}}(\mathcal{O}(V))$ for which the diagram

$$\begin{tikzcd}
\mathcal{O}(V) \arrow[r, "\iota^*"] \arrow[dr, "\eta_{\mathcal{O}(V)}"'] & \mathcal{O}(U) \arrow[d, "v", "\cong"'] \\
& D_{\mathfrak{b}}(\mathcal{O}(V)) = \mathcal{O}(W)
\end{tikzcd}$$

commutes. By 6.4.2(ii), there is a morphism of varieties $\gamma : U \to W$ such that $\gamma^* = v^{-1}$, and there is a morphism of varieties $\beta : W \to V$ such that $\beta^* = \eta_{\mathcal{O}(V)}$. Since $(\beta \circ \gamma)^* = \gamma^* \circ \beta^* = \iota^*$, it also follows from 6.4.2(ii) that $\beta \circ \gamma = \iota$. Our strategy is to use Lemma 6.4.3 to show that γ is an isomorphism of varieties, and so our immediate aim is to show that γ is surjective.

Let $w \in W$. Note that $\beta^{*-1}(I_W(w)) = I_V(\beta(w))$. Since

$$(\beta^{*-1}(I_W(w)))D_{\mathfrak{b}}(\mathcal{O}(V)) \subseteq I_W(w) \subset D_{\mathfrak{b}}(\mathcal{O}(V)) = \mathfrak{b}D_{\mathfrak{b}}(\mathcal{O}(V)),$$

it follows that $\mathfrak{b} \nsubseteq \beta^{*-1}(I_W(w)) = I_V(\beta(w))$. Therefore $\beta(w) \in U$. Denote $\beta(w)$ by u. We aim to show that $\gamma(u) = w$.

Suppose that $\gamma(u) \neq w$, and look for a contradiction. By 6.4.2(vi), there exists a function $g \in \mathcal{O}(W)$ such that $g(w) = 0$ and $g(\gamma(u)) \neq 0$. Also, since $\mathfrak{b} \nsubseteq I_V(u)$, there exists $h \in \mathfrak{b} \setminus I_V(u)$. Now $\mathrm{Coker}(\eta_{\mathcal{O}(V)}) \cong H_{\mathfrak{b}}^1(\mathcal{O}(V))$, by 2.2.4(i)(c), and so this cokernel is $\mathfrak{b}$-torsion. Therefore, there exists $n \in \mathbb{N}$ such that $\beta^*(h^n)g = \eta_{\mathcal{O}(V)}(h^n)g = h^n g \in \eta_{\mathcal{O}(V)}(\mathcal{O}(V)) = \beta^*(\mathcal{O}(V))$. Thus there exists $k \in \mathcal{O}(V)$ such that $\beta^*(h^n)g = \beta^*(k)$. We shall now calculate $k(u)$ in two ways. First of all,

$$\begin{aligned} k(u) &= k(\beta(w)) = (\beta^*(k))(w) = (\beta^*(h^n)g)(w) \\ &= ((\beta^*(h))(w))^n g(w) = 0. \end{aligned}$$

On the other hand,

$$\begin{aligned} k(u) &= k(\iota(u)) = k(\beta \circ \gamma(u)) = k(\beta(\gamma(u))) = (\beta^*(k))(\gamma(u)) \\ &= (\beta^*(h^n)g)(\gamma(u)) = \big((\beta^*(h))(\gamma(u))\big)^n g(\gamma(u)) \\ &= (h(\beta \circ \gamma(u)))^n g(\gamma(u)) = (h(u))^n g(\gamma(u)), \end{aligned}$$

and this is non-zero by choice of h and g. This contradiction shows that $\gamma(u) = w$.

We have therefore proved that γ is surjective, and so we can now use Lemma 6.4.3 to deduce that γ is an isomorphism of varieties, so that U is affine. □

6.4.5 Corollary. *Let the notation be as in* 6.4.1, *and assume that* $U = V \setminus V(\mathfrak{b})$ *is affine. Then* $V \setminus U = V(\mathfrak{b})$ *is of pure codimension* 1 *in* V.

Proof. By Serre's Affineness Criterion 6.4.4, the functor $D_{\mathfrak{b}}$ is exact. Therefore, by 6.3.6, $\operatorname{ht}\mathfrak{p} \leq 1$ for every minimal prime ideal $\mathfrak{p}$ of $\mathfrak{b}$. But $\mathfrak{b} \neq 0$ and $\mathcal{O}(V)$ is an integral domain, so that $\operatorname{ht}\mathfrak{p} = 1$ for every minimal prime ideal $\mathfrak{p}$ of $\mathfrak{b}$. Hence every irreducible component of $V(\mathfrak{b})$ has codimension 1 in V. □

Our work on Serre's Affineness Criterion raises the following questions. We again use the notation of 6.4.1. First, if $U = V \setminus V(\mathfrak{b})$ is affine, so that $\mathfrak{b}D_{\mathfrak{b}}(\mathcal{O}(V)) = D_{\mathfrak{b}}(\mathcal{O}(V))$, then it follows from 6.3.4 that $D_{\mathfrak{b}}(\mathcal{O}(V))$ is a finitely generated $\mathcal{O}(V)$-algebra: is the converse statement true, that is, if $D_{\mathfrak{b}}(\mathcal{O}(V))$ is a finitely generated $\mathcal{O}(V)$-algebra, is it necessarily the case that U is affine? Second, is the converse of 6.4.5 true, that is, if $V \setminus U = V(\mathfrak{b})$ is of pure codimension 1 in V, is it necessarily the case that U is affine? Another examination of Hartshorne's Example (see 2.3.7 and 3.3.4) will provide us with negative answers to both questions.

6.4.6 Hartshorne's Example revisited again. We consider again the affine variety V in $\mathbb{A}^4$ studied in 2.3.7 and 3.3.4 and given by

$$V := V_{\mathbb{A}^4}(X_1X_4 - X_2X_3,\ X_1^2X_3 + X_1X_2 - X_2^2,\ X_3^3 + X_3X_4 - X_4^2).$$

As in 3.3.4, let

$$L := V_{\mathbb{A}^4}(X_2,\ X_3,\ X_4) = \big\{(c,0,0,0) \in \mathbb{A}^4 : c \in \mathbb{C}\big\}$$

and $\overline{L} := \big\{(c,0) \in \mathbb{A}^2 : c \in \mathbb{C}\big\}$. Our argument uses the morphism of varieties $\alpha : \mathbb{A}^2 \to V$ of 2.3.7 for which $\alpha((c,d)) = (c, cd, d(d-1), d^2(d-1))$ for all $(c,d) \in \mathbb{A}^2$. It was shown in 3.3.4 that the restriction of α provides an isomorphism of (quasi-affine) varieties $\mathbb{A}^2 \setminus (\{(0,1)\} \cup \overline{L}) \xrightarrow{\cong} V \setminus L$. Now L is of pure codimension 1 in V. (As L is actually a subvariety of V, this statement is equivalent to the

statement that $\operatorname{codim}_V L = 1$.) If we can show that $U := \mathbb{A}^2 \setminus (\{(0,1)\} \cup \overline{L})$ is not affine and that $\mathcal{O}(U)$ is a finitely generated $\mathbb{C}$-algebra, then it will follow that both questions posed just after 6.4.5 have negative answers. Let $q := (0,1) \in \mathbb{A}^2$. As $\mathbb{A}^2 \setminus U = \overline{L} \cup \{q\}$ is not of pure codimension 1 in $\mathbb{A}^2$, it follows from 6.4.5 that U is not affine.

Next, $\overline{L} = V_{\mathbb{A}^2}(Y)$, so that $\mathbb{A}^2 \setminus \overline{L}$ is affine, and, by 2.3.2 and 2.2.16, we can identify $\mathcal{O}(\mathbb{A}^2 \setminus \overline{L})$ with the subring $\mathbb{C}[X,Y]_Y = \mathbb{C}[X,Y,Y^{-1}]$ of $\mathbb{C}(X,Y)$.

Note that $I_{\mathbb{A}^2 \setminus \overline{L}}(q) = (X, Y-1)\mathbb{C}[X,Y,Y^{-1}]$. (Observe that the maximal ideal $(X, Y-1)$ of $\mathbb{C}[X,Y]$ does not meet $\{Y^i : i \in \mathbb{N}_0\}$.) Since $I_{\mathbb{A}^2 \setminus \overline{L}}(q)$ contains a $\mathbb{C}[X,Y,Y^{-1}]$-sequence $X, Y-1$ of length 2, it follows from 2.2.6 that

$$\eta_{\mathbb{C}[X,Y,Y^{-1}]} : \mathbb{C}[X,Y,Y^{-1}] \longrightarrow D_{I_{\mathbb{A}^2 \setminus \overline{L}}(q)}(\mathbb{C}[X,Y,Y^{-1}])$$

is an isomorphism. But, by 2.3.2, and as $U = (\mathbb{A}^2 \setminus \overline{L}) \setminus \{q\}$, there is an isomorphism

$$D_{I_{\mathbb{A}^2 \setminus \overline{L}}(q)}(\mathbb{C}[X,Y,Y^{-1}]) \cong \mathcal{O}((\mathbb{A}^2 \setminus \overline{L}) \setminus \{q\}) = \mathcal{O}(U)$$

of $\mathcal{O}(\mathbb{A}^2 \setminus \overline{L})$-algebras. Hence $\mathcal{O}(U)$ is a finitely generated $\mathbb{C}$-algebra. Also, the fact that the map $\eta_{\mathbb{C}[X,Y,Y^{-1}]}$ is an isomorphism shows that

$$(X, Y-1)D_{I_{\mathbb{A}^2 \setminus \overline{L}}(q)}(\mathbb{C}[X,Y,Y^{-1}]) \neq D_{I_{\mathbb{A}^2 \setminus \overline{L}}(q)}(\mathbb{C}[X,Y,Y^{-1}]),$$

and so we see again (this time from Serre's Affineness Criterion 6.4.4) that the quasi-affine variety U is not affine.

Thus both questions posed just after 6.4.5 have negative answers.

6.4.7 Exercise. Let the notation be as in 6.4.1. Also, let $\mathfrak{b}'$ be a second non-zero ideal of $\mathcal{O}(V)$ and let U' denote the quasi-affine variety $V \setminus V(\mathfrak{b}')$. Deduce from Exercise 6.3.9 and Serre's Affineness Criterion 6.4.4 that if U and U' are affine, then $U \cap U'$ is also affine.

7

Artinian local cohomology modules

In this chapter, we shall show that certain local cohomology modules are Artinian, that is, satisfy the descending chain condition on submodules, and we shall exploit our results to provide a different proof of a theorem in Chapter 6.

Suppose, temporarily, that $(R, \mathfrak{m})$ is local. In the Non-vanishing Theorem 6.1.4, we proved that, if M is a non-zero, finitely generated R-module of dimension n, then $H^n_{\mathfrak{m}}(M) \neq 0$. One consequence of our work in this chapter is that we can give an alternative proof of this result, and, at the same time, obtain more information than we deduced in Chapter 6. Our approach in this chapter exploits the facts that the R-module $H^n_{\mathfrak{m}}(M)$ is actually Artinian, and that, for Artinian modules over commutative rings, there is available a theory of secondary representation that is, in several respects, dual to the theory of primary decomposition of Noetherian modules over commutative rings.

7.1 Artinian modules

We begin with some arguments due to L. Melkersson ([36], [37]) which will enable us to show that, for a non-zero, finitely generated module M of dimension n over the local ring $(R, \mathfrak{m})$, the n-th local cohomology module $H^n_{\mathfrak{a}}(M)$ of M with respect to $\mathfrak{a}$ is Artinian, and all the local cohomology modules $H^i_{\mathfrak{m}}(M)$ $(i \in \mathbb{N}_0)$ of M with respect to $\mathfrak{m}$ are Artinian.

We revert to our standard hypotheses concerning R and $\mathfrak{a}$ (although it is worth pointing out that the first two results below (due to Melkersson) actually hold under weaker hypotheses).

7.1.1 Lemma (L. Melkersson [36, Lemma 2.1]). *Let $a \in R$ and let M be an aR-torsion R-module. Suppose that N, N' are submodules of M such that $N' \subseteq N$ and $a^i(0 :_N a^{i+1}) = a^i(0 :_{N'} a^{i+1})$ for all $i \in \mathbb{N}_0$. Then $N = N'$.*

Proof. Since each element of N is annihilated by some power of a, it is enough for us to show that $(0 :_N a^i) \subseteq N'$ for all $i \in \mathbb{N}$. We prove this by induction on i. By hypothesis, $(0 :_N a) = (0 :_{N'} a) \subseteq N'$, and so we assume that, for $i \in \mathbb{N}$, we have proved that $(0 :_N a^i) \subseteq N'$.

Let $z \in (0 :_N a^{i+1})$. Then $a^i z \in a^i(0 :_N a^{i+1}) = a^i(0 :_{N'} a^{i+1})$, and so there exists $z' \in (0 :_{N'} a^{i+1})$ such that $a^i z = a^i z'$. Hence $z - z' \in (0 :_N a^i)$, and so $z - z' \in N'$ by the inductive assumption. Therefore $z = (z - z') + z' \in N'$, and the inductive step is complete. □

7.1.2 Theorem (L. Melkersson [36, Theorem 1.3]). *Assume that M is an $\mathfrak{a}$-torsion R-module for which $(0 :_M \mathfrak{a})$ is Artinian. Then M is Artinian.*

Proof. We suppose that $\mathfrak{a}$ can be generated by t elements and proceed by induction on t. When $t = 0$, we have $\mathfrak{a} = 0$ and $(0 :_M \mathfrak{a}) = M$, so that there is nothing to prove in this case.

Now suppose that $t = 1$ and $\mathfrak{a} = Ra$ for $a \in R$. Let

$$L_1 \supseteq L_2 \supseteq \ldots \supseteq L_n \supseteq L_{n+1} \supseteq \ldots$$

be a descending chain of submodules of M. Observe that, for each $i \in \mathbb{N}_0$ and each submodule L of M, we have $a^i(0 :_L a^{i+1}) \subseteq (0 :_M a)$. In fact, for each $n \in \mathbb{N}$,

$$(0 :_{L_n} a) \supseteq \ldots \supseteq a^i(0 :_{L_n} a^{i+1}) \supseteq a^{i+1}(0 :_{L_n} a^{i+2}) \supseteq \ldots$$

is a descending chain of submodules of the Artinian R-module $(0 :_M a)$, and so is eventually stationary: let E_n denote its eventual stationary value, so that there is $k_n \in \mathbb{N}$ such that $a^i(0 :_{L_n} a^{i+1}) = E_n$ for all $i \geq k_n$.

Since

$$\begin{aligned} E_n &= a^{k_n+k_{n+1}}(0 :_{L_n} a^{k_n+k_{n+1}+1}) \\ &\supseteq a^{k_n+k_{n+1}}(0 :_{L_{n+1}} a^{k_n+k_{n+1}+1}) = E_{n+1}, \end{aligned}$$

we see that

$$E_1 \supseteq E_2 \supseteq \ldots \supseteq E_n \supseteq E_{n+1} \supseteq \ldots$$

is a descending chain of submodules of the Artinian R-module $(0 :_M a)$, and so there exists $t \in \mathbb{N}$ such that $E_n = E_t$ for all $n \geq t$. Now for all $i, n \in \mathbb{N}$ with $n \geq t$ and $i \geq k_t$, we have

$$E_t = a^{k_t}(0 :_{L_t} a^{k_t+1}) \supseteq a^i(0 :_{L_t} a^{i+1}) \supseteq a^i(0 :_{L_n} a^{i+1}) \supseteq E_n = E_t.$$

Thus $a^i(0 :_{L_n} a^{i+1}) = E_t$ for all $n \geq t$ and $i \geq k_t$.

We plan to use Lemma 7.1.1. With this in mind, we consider, for each integer $i = 0, 1, 2, \ldots, k_t - 1$, the descending chain

$$a^i(0 :_{L_1} a^{i+1}) \supseteq \ldots \supseteq a^i(0 :_{L_n} a^{i+1}) \supseteq a^i(0 :_{L_{n+1}} a^{i+1}) \supseteq \ldots$$

of submodules of the Artinian R-module $(0 :_M a)$: there exists $u \in \mathbb{N}$ with $u \geq t$ such that $a^i(0 :_{L_n} a^{i+1}) = a^i(0 :_{L_u} a^{i+1})$ for all $n \geq u$ and all $i = 0, 1, 2, \ldots, k_t - 1$.

We now have that, for each integer $n \geq u$,

$$a^i(0 :_{L_n} a^{i+1}) = a^i(0 :_{L_{n+1}} a^{i+1}) \qquad \text{for all } i \in \mathbb{N}_0:$$

this equation is true for all $i = 0, 1, 2, \ldots, k_t - 1$ by the last paragraph and for all $i \geq k_t$ by the paragraph before that. Therefore, by Lemma 7.1.1, we have $L_n = L_{n-1}$ for all $n \geq u$. It follows that M is Artinian.

Now suppose, inductively, that $t > 1$ and the result has been proved for ideals that can be generated by fewer than t elements. Suppose that $\mathfrak{a}$ is generated by t elements $a_1, \ldots, a_t$. Set $\mathfrak{b} = Ra_1 + \cdots + Ra_{t-1}$ and $N = (0 :_M \mathfrak{b})$. Then N is Ra_t-torsion and $(0 :_N a_t) = (0 :_M \mathfrak{a})$. It therefore follows from what we have already proved in the case where $t = 1$ that $N = (0 :_M \mathfrak{b})$ is Artinian. Since M is, of course, $\mathfrak{b}$-torsion and $\mathfrak{b}$ can be generated by $t - 1$ elements, we can apply the inductive hypothesis to deduce that M is Artinian. The inductive step is complete. □

We immediately exploit Theorem 7.1.2 to prove that certain local cohomology modules are Artinian. The proofs presented below of the next two theorems are due to L. Melkersson (see [37, Theorems 2.1 and 2.2]), although the results themselves are somewhat older.

7.1.3 Theorem. *Assume that $(R, \mathfrak{m})$ is local, and let M be a finitely generated R-module. Then the R-module $H^i_{\mathfrak{m}}(M)$ is Artinian for all $i \in \mathbb{N}_0$.*

Proof. We use induction on i. First, $\Gamma_{\mathfrak{m}}(M)$ is a finitely generated R-module annihilated by a power of $\mathfrak{m}$; hence $H^0_{\mathfrak{m}}(M)$ has finite length.

Now suppose, inductively, that $i > 0$ and we have shown that $H^{i-1}_{\mathfrak{m}}(M')$ is Artinian for every finitely generated R-module M'. Now $H^i_{\mathfrak{m}}(M) \cong H^i_{\mathfrak{m}}(M/\Gamma_{\mathfrak{m}}(M))$ by 2.1.7(iii). Also, $M/\Gamma_{\mathfrak{m}}(M)$ is a (finitely generated) $\mathfrak{m}$-torsion-free R-module, by 2.1.2. We therefore assume in addition that M is an $\mathfrak{m}$-torsion-free R-module.

We now use 2.1.1(ii) to deduce that $\mathfrak{m}$ contains an element r which is a non-zerodivisor on M. The exact sequence

$$0 \longrightarrow M \xrightarrow{r} M \longrightarrow M/rM \longrightarrow 0$$

induces an exact sequence

$$H^{i-1}_{\mathfrak{m}}(M/rM) \longrightarrow H^i_{\mathfrak{m}}(M) \xrightarrow{r} H^i_{\mathfrak{m}}(M)$$

of local cohomology modules. Since M/rM is a finitely generated R-module, it follows from the inductive hypothesis that $H^{i-1}_{\mathfrak{m}}(M/rM)$ is Artinian, so that, in view of the above exact sequence, the R-module $(0 :_{H^i_{\mathfrak{m}}(M)} r)$ is Artinian. Since $H^i_{\mathfrak{m}}(M)$ is $\mathfrak{m}$-torsion and therefore Rr-torsion, it follows from Theorem 7.1.2 that $H^i_{\mathfrak{m}}(M)$ is Artinian. The inductive step is complete. □

The following exercise generalizes Theorem 7.1.3 to non-local situations.

7.1.4 ♯Exercise. Assume that $R/\mathfrak{a}$ is Artinian, and let M be a finitely generated R-module. Show that $H^i_{\mathfrak{a}}(M)$ is Artinian for all $i \in \mathbb{N}_0$.

7.1.5 Exercise. Suppose that $\mathfrak{m}$ is a maximal ideal of R, and that $\mathfrak{q}$ is an $\mathfrak{m}$-primary ideal of R. Let M be an R-module, and let $i \in \mathbb{N}_0$.

(i) Let $s \in R \setminus \mathfrak{m}$. Show that multiplication by s provides an automorphism of $H^i_{\mathfrak{q}}(M)$, so that this local cohomology module has a natural structure as an $R_{\mathfrak{m}}$-module.

(ii) Show that a subset of $H^i_{\mathfrak{q}}(M)$ is an $R_{\mathfrak{m}}$-submodule if and only if it is an R-submodule.

(iii) Deduce from (i), (ii) and 7.1.3 that, when M is finitely generated, $H^i_{\mathfrak{q}}(M)$ is an Artinian R-module.

7.1.6 Theorem. *Assume that $(R, \mathfrak{m})$ is local, and let M be a non-zero, finitely generated R-module of dimension n. Then the R-module $H^n_{\mathfrak{a}}(M)$ is Artinian.*

Proof. We use induction on n. If $n = 0$, then $\sqrt{(0 : M)} = \mathfrak{m}$, so that M is annihilated by a power of $\mathfrak{m}$ and so has finite length; therefore its submodule $\Gamma_{\mathfrak{a}}(M)$ also has finite length.

Now suppose, inductively, that $n > 0$ and we have established the result for (non-zero, finitely generated) R-modules of dimension smaller than n. Now $H^n_{\mathfrak{a}}(M) \cong H^n_{\mathfrak{a}}(M/\Gamma_{\mathfrak{a}}(M))$ by 2.1.7(iii). If $\dim(M/\Gamma_{\mathfrak{a}}(M)) < n$, then $H^n_{\mathfrak{a}}(M/\Gamma_{\mathfrak{a}}(M)) = 0$ by Grothendieck's Vanishing Theorem 6.1.2, and there is nothing to prove. Since $M/\Gamma_{\mathfrak{a}}(M)$ is $\mathfrak{a}$-torsion-free (by 2.1.2), we therefore make the additional assumption that M is an $\mathfrak{a}$-torsion-free R-module.

The argument now proceeds like that used in the proof of Theorem 7.1.3 above. By 2.1.1(ii), the ideal $\mathfrak{a}$ contains an element r which is a non-zerodivisor on M. The exact sequence $0 \longrightarrow M \xrightarrow{r} M \longrightarrow M/rM \longrightarrow 0$ induces an exact sequence $H^{n-1}_{\mathfrak{a}}(M/rM) \longrightarrow H^n_{\mathfrak{a}}(M) \xrightarrow{r} H^n_{\mathfrak{a}}(M)$. Since r is not in any

minimal member of $\mathrm{Supp}(M)$, we have $\dim(M/rM) \leq n-1$, so that, by the inductive hypothesis (or Grothendieck's Vanishing Theorem 6.1.2), the R-module $H_{\mathfrak{a}}^{n-1}(M/rM)$ is Artinian. Therefore, in view of the above exact sequence, $(0 :_{H_{\mathfrak{a}}^n(M)} r)$ is Artinian. Since $H_{\mathfrak{a}}^n(M)$ is Rr-torsion, it follows from Theorem 7.1.2 that $H_{\mathfrak{a}}^n(M)$ is Artinian. The inductive step is complete. □

It is perhaps worth pointing out that, in our applications of Melkersson's Theorem 7.1.2 in the proofs of 7.1.3 and 7.1.6, we have only used the special case of 7.1.2 in which $\mathfrak{a}$ is principal. However, this is perhaps not surprising, as most of our proof of 7.1.2 was devoted to the case when $\mathfrak{a}$ is principal.

The following exercise generalizes Theorem 7.1.6 to non-local situations.

7.1.7 Exercise. Let M be a non-zero, finitely generated R-module of finite dimension n. Show that the R-module $H_{\mathfrak{a}}^n(M)$ is Artinian.

7.2 Secondary representation

We intend to exploit Theorem 7.1.3 to provide another proof of the Non-vanishing Theorem 6.1.4, which states that, if M is a non-zero, finitely generated module of dimension n over the local ring $(R, \mathfrak{m})$, then $H_{\mathfrak{m}}^n(M) \neq 0$. We are going to use the theory of secondary representations of Artinian modules. As this theory, although mentioned in Matsumura [35, Section 6, Appendix], is not as well known as the theory of primary decomposition, we shall guide the reader through the main points by means of a series of exercises. Although we shall maintain our standard hypothesis that R is Noetherian, the reader might be interested to learn that this condition is not strictly necessary for the development of a worthwhile theory: see D. Kirby [29], I. G. Macdonald [30] or D. G. Northcott [44].

7.2.1 Definitions and ♯Exercise. Let S be an R-module. We say that S is *secondary* precisely when $S \neq 0$ and, for each $r \in R$, either $rS = S$ or there exists $n \in \mathbb{N}$ such that $r^n S = 0$. Show that, when this is the case, $\mathfrak{p} := \sqrt{(0 :_R S)}$ is a prime ideal of R: in these circumstances, we say that S is a $\mathfrak{p}$-*secondary* R-*module*.

Show that a non-zero homomorphic image of a $\mathfrak{p}$-secondary R-module is again $\mathfrak{p}$-secondary.

Show that, if $S_1, \ldots, S_n$ (where $n \in \mathbb{N}$) are $\mathfrak{p}$-secondary submodules of an R-module M, then so too is $\sum_{i=1}^n S_i$.

7.2.2 Definitions and ♯Exercise. Let M be an R-module. A *secondary representation of* M is an expression for M as a sum of finitely many secondary submodules of M. Such a secondary representation

$$M = S_1 + \cdots + S_n \qquad \text{with } S_i \ \ \mathfrak{p}_i\text{-secondary } (1 \leq i \leq n)$$

of M is said to be *minimal* precisely when

(i) $\mathfrak{p}_1, \ldots, \mathfrak{p}_n$ are n different prime ideals of R; and

(ii) for all $j = 1, \ldots, n$, we have $S_j \not\subseteq \sum_{\substack{i=1 \\ i \neq j}}^{n} S_i$.

We say that M is a *representable R-module* precisely when it has a secondary representation. As the sum of the empty family of submodules of an R-module is zero, we shall regard a zero R-module as representable.

Show that a representable R-module has a minimal secondary representation.

7.2.3 ♯Exercise: the First Uniqueness Theorem. Let M be a representable R-module and let

$$M = S_1 + \cdots + S_n \qquad \text{with } S_i \ \ \mathfrak{p}_i\text{-secondary } (1 \leq i \leq n)$$

and

$$M = S'_1 + \cdots + S'_{n'} \qquad \text{with } S'_i \ \ \mathfrak{p}'_i\text{-secondary } (1 \leq i \leq n')$$

be two minimal secondary representations of M. Prove that $n = n'$ and

$$\{\mathfrak{p}_1, \ldots, \mathfrak{p}_n\} = \{\mathfrak{p}'_1, \ldots, \mathfrak{p}'_n\}.$$

(Here is a hint: show, for $\mathfrak{p} \in \operatorname{Spec}(R)$, that $\mathfrak{p}$ is one of $\mathfrak{p}_1, \ldots, \mathfrak{p}_n$ if and only if there is a homomorphic image of M which is $\mathfrak{p}$-secondary.)

7.2.4 Definition. Let M be a representable R-module and let

$$M = S_1 + \cdots + S_n \qquad \text{with } S_i \ \ \mathfrak{p}_i\text{-secondary } (1 \leq i \leq n)$$

be a minimal secondary representation of M. Then the n-element set

$$\{\mathfrak{p}_1, \ldots, \mathfrak{p}_n\},$$

which is independent of the choice of minimal secondary representation of M by 7.2.3, is called *the set of attached prime ideals of* M and denoted by $\operatorname{Att} M$ or $\operatorname{Att}_R M$. The members of $\operatorname{Att} M$ are referred to as the *attached prime ideals* or the *attached primes* of M.

7.2.5 ♯Exercise. Suppose that the R-module M is representable, and let $\mathfrak{p} \in \operatorname{Spec}(R)$. Use the Noetherian property of R to show that $\mathfrak{p} \in \operatorname{Att} M$ if and only if there is a homomorphic image of M which has annihilator equal to $\mathfrak{p}$.

7.2.6 Exercise. Let $0 \longrightarrow L \longrightarrow M \longrightarrow N \longrightarrow 0$ be an exact sequence of representable R-modules and R-homomorphisms. Prove that

$$\operatorname{Att} N \subseteq \operatorname{Att} M \subseteq \operatorname{Att} L \cup \operatorname{Att} N.$$

7.2.7 ♯Exercise: the Second Uniqueness Theorem. Let M be a representable R-module and let

$$M = S_1 + \cdots + S_n \qquad \text{with } S_i \ \ \mathfrak{p}_i\text{-secondary } (1 \leq i \leq n)$$

be a minimal secondary representation of M.

Suppose that $\mathfrak{p}_j$ is a minimal member of $\{\mathfrak{p}_1, \ldots, \mathfrak{p}_n\}$ with respect to inclusion. Prove that $S_j = \bigcap_{r \in R \setminus \mathfrak{p}_j} rM$.

In the light of the First Uniqueness Theorem 7.2.3, this means that, in a minimal secondary representation of M, each secondary term corresponding to a minimal member of $\operatorname{Att} M$ is uniquely determined by M and independent of the choice of minimal secondary representation.

In order to make use of this theory of secondary representation, we shall need the fact that every Artinian R-module is representable. This fact is the subject of the next two exercises.

7.2.8 Definition and ♯Exercise. An R-module N is said to be *sum-irreducible* precisely when it is non-zero and cannot be expressed as the sum of two proper submodules of itself.

Prove that an Artinian sum-irreducible R-module is secondary.

7.2.9 ♯Exercise. Let A be an Artinian R-module. Show that A can be expressed as a sum of finitely many sum-irreducible submodules, and deduce from Exercise 7.2.8 above that A is representable.

We can therefore form the finite set $\operatorname{Att} A$. Note that $\operatorname{Att} A = \emptyset$ if and only if $A = 0$.

Actually, the class of R-modules which possess secondary representations is, in general, larger than the class of Artinian R-modules: this is illustrated by the next exercise.

7.2.10 Exercise. Let E be an injective R-module.

(i) Suppose that Q is an R-module with the property that its zero submodule is a $\mathfrak{p}$-primary submodule of Q. Prove that $\operatorname{Hom}_R(Q, E)$, if non-zero, is $\mathfrak{p}$-secondary.

(ii) Let M be a finitely generated R-module. Prove that $\operatorname{Hom}_R(M, E)$ is representable, and that $\operatorname{Att}_R(\operatorname{Hom}_R(M, E)) \subseteq \operatorname{Ass}_R M$.

(iii) Deduce that E is representable and that $\operatorname{Att}_R E \subseteq \operatorname{Ass} R = \operatorname{ass} 0$.

(iv) The injective R-module E is said to be an *injective cogenerator* for R precisely when $\operatorname{Hom}_R(N, E) \neq 0$ for every non-zero R-module N. Prove that, when this is the case, $\operatorname{Att}_R(\operatorname{Hom}_R(M, E)) = \operatorname{Ass}_R M$ for every finitely generated R-module M.

7.2.11 Proposition. *Let A be an Artinian R-module, and let $r \in R$. Then*

(i) *$rA = A$ if and only if $r \in R \setminus \bigcup_{\mathfrak{p} \in \operatorname{Att} A} \mathfrak{p}$; and*

(ii) $\sqrt{(0 : A)} = \bigcap_{\mathfrak{p} \in \operatorname{Att} A} \mathfrak{p}$.

Proof. Clearly, we can assume that $A \neq 0$, since $\operatorname{Att} 0 = \emptyset$. Let

$$A = S_1 + \cdots + S_n \qquad \text{with } S_i \ \ \mathfrak{p}_i\text{-secondary } (1 \leq i \leq n)$$

be a minimal secondary representation of M.

(i) Suppose that $r \in R \setminus \bigcup_{\mathfrak{p} \in \operatorname{Att} A} \mathfrak{p}$; then $rS_i = S_i$ for all $i = 1, \ldots, n$, and so $rA = A$. On the other hand, if $r \in \mathfrak{p}_j$ for some j with $1 \leq j \leq n$, then $r^h S_j = 0$ for a sufficiently large integer h, and so

$$r^h A = r^h S_1 + \cdots + r^h S_n \subseteq \sum_{\substack{i=1 \\ i \neq j}}^{n} S_i \subset A.$$

(ii) To prove this, just note that

$$\sqrt{(0 : A)} = \bigcap_{i=1}^{n} \sqrt{(0 : S_i)} = \bigcap_{i=1}^{n} \mathfrak{p}_i. \ \square$$

Part (i) of 7.2.11 provides an Artinian analogue of the well-known fact that, if N is a Noetherian R-module and $r \in R$, then r is a non-zerodivisor on N if and only if r lies outside all the associated prime ideals of N.

There is more to the theory of secondary representation than the brief outline presented above: the interested reader should consult the references cited earlier for this topic, especially [30]. We have presented little more than the part of the theory we shall need to use. Its relevance for us lies in the fact that, when $(R, \mathfrak{m})$ is local, and M is a finitely generated R-module, then, for each $i \in \mathbb{N}_0$, the local cohomolgy module $H^i_{\mathfrak{m}}(M)$ is, by 7.1.3, Artinian, and so we can form the finite

set of prime ideals $\mathrm{Att}(H^i_{\mathfrak{m}}(M))$ and use the theory of secondary representation for these modules. In the subsequent work, we shall be interested in whether, for particular j, the local cohomology module $H^j_{\mathfrak{m}}(M)$ is finitely generated (and so, since it is in any case Artinian, of finite length). With this in mind, we present here one more result about secondary representation before going on to apply the theory to local cohomology modules.

7.2.12 Corollary. *Let $(R, \mathfrak{m})$ be local and let A be an Artinian R-module. Then A is finitely generated, and so of finite length, if and only if* $\mathrm{Att}\, A \subseteq \{\mathfrak{m}\}$.

Proof. ($\Rightarrow$) When A is of finite length, there exists $h \in \mathbb{N}$ such that $\mathfrak{m}^h A = 0$, so that A is either 0 or $\mathfrak{m}$-secondary.

($\Leftarrow$) If $\mathrm{Att}\, A \subseteq \{\mathfrak{m}\}$, then, by 7.2.11(ii), there exists $h \in \mathbb{N}$ such that $\mathfrak{m}^h A = 0$, and it then follows from, for example, [60, 7.30] that A has finite length. □

7.3 The Non-vanishing Theorem again

Our first lemma of this section is in preparation for the main theorem of this chapter. Recall our convention that the dimension of the zero R-module is -1.

7.3.1 Lemma. *Let $(R, \mathfrak{m})$ be local and let M be a non-zero, finitely generated R-module of dimension n. Then the set*

$$\Sigma := \{N' : N' \text{ is a submodule of } M \text{ and } \dim N' < n\}$$

has a largest element with respect to inclusion, N say. Set $G := M/N$. Then

(i) $\dim G = n$;
(ii) *G has no non-zero submodule of dimension less than n;*
(iii) $\mathrm{Ass}\, G = \{\mathfrak{p} \in \mathrm{Ass}\, M : \dim R/\mathfrak{p} = n\}$; *and*
(iv) $H^n_{\mathfrak{m}}(G) \cong H^n_{\mathfrak{m}}(M)$.

Proof. Since M is a Noetherian R-module, the set Σ has a maximal member, N say. Since the sum of any two members of Σ is again in Σ, it follows that N contains every member of Σ, and so is the largest element of Σ.

(i) It follows from the canonical exact sequence

$$0 \longrightarrow N \longrightarrow M \longrightarrow G \longrightarrow 0$$

that $\mathrm{Supp}(G) \subseteq \mathrm{Supp}(M)$, and that any $\mathfrak{p} \in \mathrm{Ass}\, M$ with $\dim R/\mathfrak{p} = n$ must belong to $\mathrm{Supp}(G)$ since it cannot belong to $\mathrm{Supp}(N)$. Hence $\dim G = n$ and $\{\mathfrak{p} \in \mathrm{Ass}\, M : \dim R/\mathfrak{p} = n\} \subseteq \mathrm{Ass}\, G$.

(ii) Suppose that L is a submodule of M such that $N \subseteq L \subseteq M$ and $\dim(L/N) < n$. Consideration of the canonical exact sequence

$$0 \longrightarrow N \longrightarrow L \longrightarrow L/N \longrightarrow 0$$

shows that $\dim L < n$; hence $L \subseteq N$ and $L/N = 0$.

(iii) Let $\mathfrak{p} \in \operatorname{Ass} G$. By (ii), $\dim R/\mathfrak{p} = n$, so that, since $\operatorname{Supp}(G) \subseteq \operatorname{Supp}(M)$, we must have $\mathfrak{p} \in \operatorname{Ass} M$. Thus

$$\operatorname{Ass} G \subseteq \{\mathfrak{p} \in \operatorname{Ass} M : \dim R/\mathfrak{p} = n\}.$$

Since the reverse inclusion was established in our proof of (i) above, we have completed the proof of (iii).

(iv) Since $\dim N < n$, it follows from Grothendieck's Vanishing Theorem 6.1.2 that $H^n_{\mathfrak{m}}(N) = H^{n+1}_{\mathfrak{m}}(N) = 0$. The claim therefore follows from the long exact sequence of local cohomology modules (with respect to $\mathfrak{m}$) that results from the exact sequence $0 \longrightarrow N \longrightarrow M \longrightarrow G \longrightarrow 0$. □

The next theorem is the main result of this chapter. With it, we not only offer an alternative proof of the result of the Non-vanishing Theorem 6.1.4 (as promised just before 6.1.3), but we also provide more information than was given in Theorem 6.1.4. (We should perhaps point out that our proof below in 7.3.2 does quote from Theorem 6.2.7 the fact that, if M is a non-zero, finitely generated module of depth d over the local ring $(R, \mathfrak{m})$, then $H^d_{\mathfrak{m}}(M) \neq 0$; however, no use was made of 6.1.4 in our proof of 6.2.7, and, indeed, the argument given in the proof of 6.2.7 is elementary.)

7.3.2 Theorem. *Assume that $(R, \mathfrak{m})$ is local, and let M be a non-zero, finitely generated R-module of dimension n. Then $H^n_{\mathfrak{m}}(M) \neq 0$ and*

$$\operatorname{Att}(H^n_{\mathfrak{m}}(M)) = \{\mathfrak{p} \in \operatorname{Ass} M : \dim R/\mathfrak{p} = n\}.$$

Proof. (This proof is due to I. G. Macdonald and R. Y. Sharp [32, Theorem 2.2].) Throughout this proof, we make tacit use of the fact, proved in Theorem 7.1.3, that, for each $i \in \mathbb{N}_0$, the module $H^i_{\mathfrak{m}}(M)$ is Artinian, so that, by 7.2.9, it has a secondary representation and we can form the set $\operatorname{Att}(H^i_{\mathfrak{m}}(M))$.

We use induction on n. When $n = 0$, the module M has finite length and so is annihilated by some power of $\mathfrak{m}$. Hence $H^0_{\mathfrak{m}}(M) \cong \Gamma_{\mathfrak{m}}(M) = M \neq 0$. By 7.2.9 and 7.2.12,

$$\begin{aligned}\operatorname{Att}(H^0_{\mathfrak{m}}(M)) &= \operatorname{Att} M = \{\mathfrak{m}\} = \operatorname{Ass} M \\ &= \{\mathfrak{p} \in \operatorname{Ass} M : \dim R/\mathfrak{p} = 0\}.\end{aligned}$$

The result has been proved in this case.

Assume, inductively, that $n > 0$ and that the result has been proved for non-zero, finitely generated R-modules of dimension $n-1$. By 7.3.1, we can, after factoring out, if necessary, the largest submodule of M of dimension smaller than n, assume that M has no non-zero submodule of dimension smaller than n. We shall make this assumption for the remainder of the inductive step, and with this assumption our aim is to show that $\operatorname{Att}(H^n_{\mathfrak{m}}(M)) = \operatorname{Ass} M$.

Since $n > 0$, we have $\mathfrak{m} \notin \operatorname{Ass} M$, and so there exists $r \in \mathfrak{m}$ which is a non-zerodivisor on M. We suppose that $H^n_{\mathfrak{m}}(M) = 0$, and look for a contradiction. If $n = 1$, we have

$$1 \leq \operatorname{grade}_M \mathfrak{m} = \operatorname{depth} M \leq \dim M = 1,$$

so that $\operatorname{grade}_M \mathfrak{m} = 1$ and we have a contradiction to 6.2.7. Thus, in our search for a contradiction, we can, and do, assume that $n > 1$.

Now, for each $r \in \mathfrak{m}$ which is a non-zerodivisor on M, the module M/rM (is non-zero and finitely generated and) has $\dim(M/rM) = n-1$, and the exact sequence $0 \longrightarrow M \xrightarrow{r} M \longrightarrow M/rM \longrightarrow 0$ induces a long exact sequence of local cohomology modules

$$H^{n-1}_{\mathfrak{m}}(M) \xrightarrow{r} H^{n-1}_{\mathfrak{m}}(M) \longrightarrow H^{n-1}_{\mathfrak{m}}(M/rM) \longrightarrow 0$$

in view of our supposition that $H^n_{\mathfrak{m}}(M) = 0$. Thus, for each $r \in \mathfrak{m}$ which is a non-zerodivisor on M, we have $H^{n-1}_{\mathfrak{m}}(M)/rH^{n-1}_{\mathfrak{m}}(M) \cong H^{n-1}_{\mathfrak{m}}(M/rM)$, and this is non-zero by the inductive hypothesis. Therefore $H^{n-1}_{\mathfrak{m}}(M) \neq 0$.

Our next step is to prove that $\mathfrak{m} \in \operatorname{Att}(H^{n-1}_{\mathfrak{m}}(M))$. We suppose that $\mathfrak{m} \notin \operatorname{Att}(H^{n-1}_{\mathfrak{m}}(M))$ and look for a contradiction. Then, by the Prime Avoidance Theorem,

$$\mathfrak{m} \nsubseteq \left(\bigcup_{\mathfrak{p} \in \operatorname{Att}(H^{n-1}_{\mathfrak{m}}(M))} \mathfrak{p} \right) \bigcup \left(\bigcup_{\mathfrak{q} \in \operatorname{Ass}(M)} \mathfrak{q} \right),$$

so that, in the light of 7.2.11(i), there exists $r_1 \in \mathfrak{m}$ which is a non-zerodivisor on M and such that $H^{n-1}_{\mathfrak{m}}(M) = r_1 H^{n-1}_{\mathfrak{m}}(M)$; this contradicts the fact that $H^{n-1}_{\mathfrak{m}}(M/r_1M) \neq 0$.

Thus $\mathfrak{m} \in \operatorname{Att}(H^{n-1}_{\mathfrak{m}}(M))$: let $\mathfrak{p}_1, \ldots, \mathfrak{p}_t$ be the remaining members of $\operatorname{Att}(H^{n-1}_{\mathfrak{m}}(M))$. Again by the Prime Avoidance Theorem, there exists

$$r_2 \in \mathfrak{m} \setminus \left(\bigcup_{i=1}^{t} \mathfrak{p}_i \right) \bigcup \left(\bigcup_{\mathfrak{q} \in \operatorname{Ass}(M)} \mathfrak{q} \right).$$

Since $r_2 \in \mathfrak{m}$ and r_2 is a non-zerodivisor on M, we again have

$$H^{n-1}_{\mathfrak{m}}(M)/r_2H^{n-1}_{\mathfrak{m}}(M) \cong H^{n-1}_{\mathfrak{m}}(M/r_2M),$$

and, by the inductive hypothesis, $H_{\mathfrak{m}}^{n-1}(M/r_2M) \neq 0$ and

$$\operatorname{Att}(H_{\mathfrak{m}}^{n-1}(M/r_2M)) \subseteq \{\mathfrak{p} \in \operatorname{Ass}(M/r_2M) : \dim R/\mathfrak{p} = n-1\}.$$

But, by 7.2.5,

$$\operatorname{Att}(H_{\mathfrak{m}}^{n-1}(M)/r_2H_{\mathfrak{m}}^{n-1}(M)) \subseteq \{\mathfrak{p} \in \operatorname{Att}(H_{\mathfrak{m}}^{n-1}(M)) : r_2 \in \mathfrak{p}\},$$

and $\mathfrak{m}$ is the only member of the latter set. Since $n > 1$, we have obtained a contradiction.

Thus we have proved that $H_{\mathfrak{m}}^n(M) \neq 0$. To complete the inductive step, since M now has no non-zero submodule of dimension smaller than n, it remains for us to prove that $\operatorname{Att}(H_{\mathfrak{m}}^n(M)) = \operatorname{Ass} M$.

We know that $\operatorname{grade}_M \mathfrak{m} \geq 1$; also, for each $r \in \mathfrak{m}$ which is a non-zerodivisor on M, we have $\dim(M/rM) = n-1$, so that $H_{\mathfrak{m}}^n(M/rM) = 0$ by Grothendieck's Vanishing Theorem 6.1.2, and the exact sequence of local cohomology modules induced by the exact sequence

$$0 \longrightarrow M \xrightarrow{r} M \longrightarrow M/rM \longrightarrow 0$$

yields that $H_{\mathfrak{m}}^n(M) = rH_{\mathfrak{m}}^n(M)$. It therefore follows from 7.2.11(i) that

$$\mathfrak{m} \setminus \bigcup_{\mathfrak{p} \in \operatorname{Ass}(M)} \mathfrak{p} \subseteq \mathfrak{m} \setminus \bigcup_{\mathfrak{q} \in \operatorname{Att}(H_{\mathfrak{m}}^n(M))} \mathfrak{q}.$$

Let $\mathfrak{q} \in \operatorname{Att}(H_{\mathfrak{m}}^n(M))$: it follows from the above inclusion relation and the Prime Avoidance Theorem that $\mathfrak{q} \subseteq \mathfrak{p}$ for some $\mathfrak{p} \in \operatorname{Ass}(M)$. Since $H_{\mathfrak{m}}^n$ is an R-linear functor, it follows that

$$(0 : M) \subseteq (0 : H_{\mathfrak{m}}^n(M)) \subseteq \mathfrak{q} \subseteq \mathfrak{p}.$$

As $n = \dim R/(0 : M) = \dim R/\mathfrak{p}$, it follows that $\mathfrak{q} = \mathfrak{p}$. Hence

$$\operatorname{Att}(H_{\mathfrak{m}}^n(M)) \subseteq \operatorname{Ass} M.$$

To establish the reverse inclusion, let $\mathfrak{p} \in \operatorname{Ass}(M)$, so that $\dim R/\mathfrak{p} = n$. By the theory of primary decomposition, there exists a $\mathfrak{p}$-primary submodule Q of M; thus M/Q is a non-zero finitely generated R-module with $\operatorname{Ass}(M/Q) = \{\mathfrak{p}\}$. Note that M/Q cannot have any non-zero submodule of dimension smaller than n (or else it would have an associated prime ideal other than $\mathfrak{p}$). Thus, by the work in the preceding six paragraphs applied to M/Q rather than M, we have $H_{\mathfrak{m}}^n(M/Q) \neq 0$ and

$$\emptyset \neq \operatorname{Att}(H_{\mathfrak{m}}^n(M/Q)) \subseteq \operatorname{Ass}(M/Q) = \{\mathfrak{p}\}.$$

Hence $\operatorname{Att}(H_{\mathfrak{m}}^n(M/Q)) = \{\mathfrak{p}\}$. Since $\dim Q < n+1$, it follows from Grothendieck's Vanishing Theorem 6.1.2 that $H_{\mathfrak{m}}^{n+1}(Q) = 0$; therefore, the canonical exact sequence $0 \longrightarrow Q \longrightarrow M \longrightarrow M/Q \longrightarrow 0$ induces an epimorphism

$H^n_{\mathfrak{m}}(M) \longrightarrow H^n_{\mathfrak{m}}(M/Q)$. It now follows from 7.2.5 that $\{\mathfrak{p}\} = \operatorname{Att}(H^n_{\mathfrak{m}}(M/Q)) \subseteq \operatorname{Att}(H^n_{\mathfrak{m}}(M))$. Hence $\operatorname{Ass} M \subseteq \operatorname{Att}(H^n_{\mathfrak{m}}(M))$. This completes the proof that $\operatorname{Ass} M = \operatorname{Att}(H^n_{\mathfrak{m}}(M))$. This completes the inductive step. □

We show next how to deduce the result of Exercise 6.1.6 quickly from Theorem 7.3.2.

7.3.3 Corollary. *Assume that $(R, \mathfrak{m})$ is local, and let M be a non-zero, finitely generated R-module of dimension $n > 0$. Then $H^n_{\mathfrak{m}}(M)$ is not finitely generated.*

Proof. By 7.1.3 and 7.3.2, the local cohomology module $H^n_{\mathfrak{m}}(M)$ is a non-zero Artinian module which has a non-maximal attached prime ideal. Hence $H^n_{\mathfrak{m}}(M)$ is not finitely generated, by 7.2.12. □

7.3.4 ♯Exercise. Let M be a finitely generated R-module for which the ideal $\mathfrak{a} + (0 : M)$ is proper. Let $\mathfrak{p}$ be a minimal prime ideal of $\mathfrak{a} + (0 : M)$, and let $t := \dim_{R_{\mathfrak{p}}} M_{\mathfrak{p}}$. Prove that $H^t_{\mathfrak{a}}(M) \neq 0$, and that, if $t > 0$, then $H^t_{\mathfrak{a}}(M)$ is not finitely generated.

8

The Lichtenbaum-Hartshorne Theorem

In this chapter, we take up again the main theme of Chapter 6, and establish another vanishing theorem for local cohomology modules, namely the local Lichtenbaum-Hartshorne Vanishing Theorem (see R. Hartshorne [21, Theorem 3.1], and C. Peskine and L. Szpiro [47, Chapitre III, Théorème 3.1]). While two important vanishing theorems in Chapter 6, namely Grothendieck's Vanishing Theorem 6.1.2, and Theorem 6.2.7, which shows that, for a finitely generated R-module M such that $\mathfrak{a}M \neq M$, we have $H^i_{\mathfrak{a}}(M) = 0$ for all $i < \operatorname{grade}_M \mathfrak{a}$, can be regarded as 'algebraic' in nature, the Lichtenbaum-Hartshorne Theorem is of 'analytic' nature, in the sense that it is intimately related with 'formal' methods and techniques, that is, with passage to completions of local rings and with the structure theory for complete local rings.

Results of a 'formal' nature in algebraic geometry sometimes provide powerful tools: the Lichtenbaum-Hartshorne Theorem is one such example, for we shall see in Chapter 19 that it can play a crucial rôle in the study of connectivity in algebraic varieties.

The local Lichtenbaum-Hartshorne Vanishing Theorem gives necessary and sufficient conditions, over an n-dimensional local ring $(R, \mathfrak{m})$, for the vanishing of n-th local cohomology modules with respect to $\mathfrak{a}$, where $\mathfrak{a}$ is proper. The sufficiency of these conditions is rather harder to prove than the necessity, and so we shall just discuss the sufficiency in this introduction. Let $\widehat{R}$ denote the completion of R. It turns out that $H^n_{\mathfrak{a}}(M) = 0$ for every R-module M if, for each $\mathfrak{P} \in \operatorname{Spec}(\widehat{R})$ satisfying $\dim \widehat{R}/\mathfrak{P} = n$, we have $\dim \widehat{R}/(\mathfrak{a}\widehat{R} + \mathfrak{P}) > 0$.

In the case when R is an n-dimensional complete local domain, the statement simplifies: then, $H^n_{\mathfrak{a}}(M) = 0$ for every R-module M if $\dim R/\mathfrak{a} > 0$. In fact, the general statement can be deduced from this special case by means of standard reductions, and we now outline our strategy for proof of the special case. This strategy is similar to that used by M. Brodmann and C. Huneke in [3].

Of course, the fact (3.4.10) that the local cohomology functor $H^i_{\mathfrak{a}}$ commutes

with direct limits means that it is enough to prove that $H^n_{\mathfrak{a}}(M') = 0$ for each finitely generated R-module M' in order to obtain the above result; in fact, Lemma 8.1.4 below will show that it is enough to prove merely that $H^n_{\mathfrak{a}}(R) = 0$. Then we shall use the Noetherian property of R to reduce to the case where $\mathfrak{a}$ is a prime ideal $\mathfrak{p}$ with $\dim R/\mathfrak{p} = 1$. As in our proof in Chapter 6 of Theorem 6.1.4, we again use ideas related to the structure theorems for complete local rings to reduce to the case where R is a Gorenstein ring.

The arguments outlined in the last paragraph will reduce our proof to the following: given a complete Gorenstein local domain R of dimension n and $\mathfrak{p} \in \operatorname{Spec}(R)$ with $\dim R/\mathfrak{p} = 1$, how can we show that $H^n_{\mathfrak{p}}(R) = 0$? Our approach to this will use the ideas concerning the symbolic powers of $\mathfrak{p}$ of Exercise 3.1.4 (for which we shall provide a solution!) to see that

$$H^n_{\mathfrak{p}}(R) \cong \varinjlim_{j \in \mathbb{N}} \operatorname{Ext}^n_R(R/\mathfrak{p}^{(j)}, R),$$

and then the facts that R is Gorenstein and $\operatorname{depth} R/\mathfrak{p}^{(j)} > 0$ to see that $\operatorname{Ext}^n_R(R/\mathfrak{p}^{(j)}, R) = 0$ for all $j \in \mathbb{N}$.

8.1 Preparatory lemmas

We plan to use Noetherian induction to reduce part of the proof of the Lichtenbaum-Hartshorne Theorem to a case where (R is a complete local domain and) $\mathfrak{a}$ is a prime ideal $\mathfrak{p}$ of R such that $\dim R/\mathfrak{p} = 1$. To achieve this, we wish to use the result of Exercise 5.1.22. For the reader's convenience, we provide a proof of that result in 8.1.2 below; our proof does not use Čech complexes, but instead uses the following lemma about injective modules.

8.1.1 Lemma. *Let $b \in R$, and let I be an injective R-module. Then the sequence of R-modules and R-homomorphisms*

$$0 \longrightarrow \Gamma_{Rb}(I) \xrightarrow{\xi_I} I \xrightarrow{\tau_I} I_b \longrightarrow 0,$$

in which ξ_I is the inclusion map and τ_I is the natural homomorphism, is split exact. Consequently, when I_b is regarded as an R-module in the natural way, it is injective; furthermore, application of the additive functor $\Gamma_{\mathfrak{a}}$ to the above split exact sequence yields a further split exact sequence of injective R-modules

$$0 \longrightarrow \Gamma_{\mathfrak{a}+Rb}(I) \longrightarrow \Gamma_{\mathfrak{a}}(I) \longrightarrow \Gamma_{\mathfrak{a}}(I_b) \longrightarrow 0.$$

Proof. Since I is injective, $H^1_{Rb}(I) = 0$; therefore, the exactness of the first sequence in the statement of the lemma is immediate from 2.2.17. By 2.1.4, the R-module $\Gamma_{Rb}(I)$ is injective, and so this exact sequence splits, and I_b, as

R-module, is injective. The second part is then immediate once one recalls from 1.1.2 that $\Gamma_{\mathfrak{a}}(\Gamma_{Rb}(I)) = \Gamma_{\mathfrak{a}+Rb}(I)$, and from 2.1.4 that $\Gamma_{\mathfrak{a}}(I')$ is injective whenever I' is an injective R-module. □

8.1.2 Proposition. *Let $b \in R$ and let M be an R-module. There is a long exact sequence of R-modules and R-homomorphisms*

$$\begin{array}{ccccccc}
0 & \longrightarrow & H^0_{\mathfrak{a}+Rb}(M) & \longrightarrow & H^0_{\mathfrak{a}}(M) & \longrightarrow & H^0_{\mathfrak{a}}(M_b) \\
 & \longrightarrow & H^1_{\mathfrak{a}+Rb}(M) & \longrightarrow & H^1_{\mathfrak{a}}(M) & \longrightarrow & H^1_{\mathfrak{a}}(M_b) \\
 & \longrightarrow & \cdots & & & & \cdots \\
 & \longrightarrow & H^i_{\mathfrak{a}+Rb}(M) & \longrightarrow & H^i_{\mathfrak{a}}(M) & \longrightarrow & H^i_{\mathfrak{a}}(M_b) \\
 & \longrightarrow & H^{i+1}_{\mathfrak{a}+Rb}(M) & \longrightarrow & \cdots & &
\end{array}$$

such that, whenever $f : M \to N$ is a homomorphism of R-modules, the diagram

$$\begin{tikzcd}
H^i_{\mathfrak{a}+Rb}(M) \arrow[r] \arrow[d, "H^i_{\mathfrak{a}+Rb}(f)"] & H^i_{\mathfrak{a}}(M) \arrow[r] \arrow[d, "H^i_{\mathfrak{a}}(f)"] & H^i_{\mathfrak{a}}(M_b) \arrow[r] \arrow[d, "H^i_{\mathfrak{a}}(f_b)"'] & H^{i+1}_{\mathfrak{a}+Rb}(M) \arrow[d, "H^{i+1}_{\mathfrak{a}+Rb}(f)"'] \\
H^i_{\mathfrak{a}+Rb}(N) \arrow[r] & H^i_{\mathfrak{a}}(N) \arrow[r] & H^i_{\mathfrak{a}}(N_b) \arrow[r] & H^{i+1}_{\mathfrak{a}+Rb}(N)
\end{tikzcd}$$

commutes for all $i \in \mathbb{N}_0$.

Proof. Let

$$I^\bullet : 0 \xrightarrow{d^{-1}} I^0 \xrightarrow{d^0} I^1 \longrightarrow \cdots \longrightarrow I^i \xrightarrow{d^i} I^{i+1} \longrightarrow \cdots$$

be an injective resolution of M, so that there is an R-homomorphism $\alpha : M \to I^0$ such that the sequence

$$0 \longrightarrow M \xrightarrow{\alpha} I^0 \xrightarrow{d^0} I^1 \longrightarrow \cdots \longrightarrow I^i \xrightarrow{d^i} I^{i+1} \longrightarrow \cdots$$

is exact. Similarly, let the exact sequence

$$0 \longrightarrow N \xrightarrow{\beta} J^0 \xrightarrow{e^0} J^1 \longrightarrow \cdots \longrightarrow J^i \xrightarrow{e^i} J^{i+1} \longrightarrow \cdots$$

provide an injective resolution for N. By the (dual of) the Comparison Theorem [52, 6.9], there exists a chain map $\phi^\bullet = (\phi^i)_{i\in\mathbb{N}_0} : I^\bullet \longrightarrow J^\bullet$ for which the diagram

$$\begin{tikzcd} M \arrow[r, "\alpha"] \arrow[d, "f"] & I^0 \arrow[d, "\phi^0"] \\ N \arrow[r, "\beta"] & J^0 \end{tikzcd}$$

commutes.

It is immediate from Lemma 8.1.1 that there is a commutative diagram

$$\begin{tikzcd} 0 \arrow[r] & \Gamma_{\mathfrak{a}+R\mathfrak{b}}(I^\bullet) \arrow[r] \arrow[d, "\Gamma_{\mathfrak{a}+R\mathfrak{b}}(\phi^\bullet)"] & \Gamma_{\mathfrak{a}}(I^\bullet) \arrow[r] \arrow[d, "\Gamma_{\mathfrak{a}}(\phi^\bullet)"] & \Gamma_{\mathfrak{a}}((I^\bullet)_{\mathfrak{b}}) \arrow[r] \arrow[d, "\Gamma_{\mathfrak{a}}((\phi^\bullet)_{\mathfrak{b}})"] & 0 \\ 0 \arrow[r] & \Gamma_{\mathfrak{a}+R\mathfrak{b}}(J^\bullet) \arrow[r] & \Gamma_{\mathfrak{a}}(J^\bullet) \arrow[r] & \Gamma_{\mathfrak{a}}((J^\bullet)_{\mathfrak{b}}) \arrow[r] & 0 \end{tikzcd}$$

of complexes of R-modules and chain maps of such complexes such that, for each $i \in \mathbb{N}_0$, the sequence $0 \to \Gamma_{\mathfrak{a}+R\mathfrak{b}}(I^i) \to \Gamma_{\mathfrak{a}}(I^i) \to \Gamma_{\mathfrak{a}}((I^i)_{\mathfrak{b}}) \to 0$ is exact, and a similar property holds for the lower row. Thus the above commutative diagram of complexes gives rise to a long exact sequence of cohomology modules of the complexes in the top row, a similar long exact sequence for the bottom row, and a chain map of the first long exact sequence into the second. Since, by 8.1.1, $(I^\bullet)_{\mathfrak{b}}$ provides an injective resolution for $M_{\mathfrak{b}}$ as R-module and $(J^\bullet)_{\mathfrak{b}}$ provides an injective resolution for $N_{\mathfrak{b}}$ as R-module, all the claims follow. □

We immediately make use of Proposition 8.1.2 in the following lemma.

8.1.3 Lemma. *Let $(R, \mathfrak{m})$ be a local integral domain of dimension n; suppose that the set*

$$\mathscr{B} := \{\mathfrak{b} : \mathfrak{b} \text{ is an ideal of } R,\ H^n_{\mathfrak{b}}(R) \neq 0 \text{ and } \dim R/\mathfrak{b} > 0\}$$

is non-empty. Let $\mathfrak{p}$ be a maximal member of $\mathscr{B}$. (The fact that R is Noetherian ensures that such a $\mathfrak{p}$ exists.)

Then $\mathfrak{p}$ is prime and $\dim R/\mathfrak{p} = 1$.

Proof. Suppose that the statement '$\mathfrak{p}$ is prime and $\dim R/\mathfrak{p} = 1$' is false. This means that there exists $\mathfrak{q} \in \operatorname{Spec}(R)$ such that $\dim R/\mathfrak{q} = 1$ and $\mathfrak{p} \subset \mathfrak{q}$. Let

$b \in \mathfrak{q} \setminus \mathfrak{p}$. Then, by 8.1.2, there is an exact sequence

$$H^n_{\mathfrak{p}+Rb}(R) \longrightarrow H^n_{\mathfrak{p}}(R) \longrightarrow H^n_{\mathfrak{p}}(R_b).$$

By the Independence Theorem 4.2.1, there is an isomorphism of R-modules $H^n_{\mathfrak{p}}(R_b) \cong H^n_{\mathfrak{p}R_b}(R_b)$. Since $\dim R_b < n$ (as $b \in \mathfrak{m}$), it follows from Grothendieck's Vanishing Theorem 6.1.2 that $H^n_{\mathfrak{p}R_b}(R_b) = 0$. It therefore follows from the above exact sequence that $H^n_{\mathfrak{p}+Rb}(R) \neq 0$, and since $\mathfrak{p} \subset \mathfrak{p}+Rb$ and $\dim R/(\mathfrak{p}+Rb) > 0$, we have obtained a contradiction to the maximality of $\mathfrak{p}$. □

Our next lemma will come as no surprise to any reader who has solved Exercises 6.1.8 and 6.1.9. However, we provide a more direct argument, which avoids use of 6.1.8.

8.1.4 Lemma. *Assume that* $\dim R = n$ *and that* $H^n_{\mathfrak{a}}(R) = 0$. *Then* $H^n_{\mathfrak{a}}(M) = 0$ *for every* R*-module* M.

Proof. Since $H^i_{\mathfrak{a}}$ commutes with direct limits (by 3.4.10) and each R-module is the direct limit of its finitely generated submodules, it is enough for us to prove that $H^n_{\mathfrak{a}}(M) = 0$ whenever M is finitely generated. However, in that case, there exists an exact sequence $0 \longrightarrow N \longrightarrow F \longrightarrow M \longrightarrow 0$ of finitely generated R-modules and R-homomorphisms in which F is free. This induces an exact sequence $H^n_{\mathfrak{a}}(F) \longrightarrow H^n_{\mathfrak{a}}(M) \longrightarrow H^{n+1}_{\mathfrak{a}}(N)$. It follows from the additivity of the local cohomology functor $H^n_{\mathfrak{a}}$ and the assumption that $H^n_{\mathfrak{a}}(R) = 0$ that $H^n_{\mathfrak{a}}(F) = 0$; since $H^{n+1}_{\mathfrak{a}}(N) = 0$ by Grothendieck's Vanishing Theorem 6.1.2, we can deduce that $H^n_{\mathfrak{a}}(M) = 0$, as required. □

8.1.5 Exercise. Assume that $\dim R = n$ and that $\mathfrak{a}$ is proper, having minimal prime ideals $\mathfrak{p}_1, \ldots, \mathfrak{p}_t$. Let M be an R-module for which $H^n_{\mathfrak{p}_i}(M) = 0$ for all $i = 1, \ldots, t$. Show that $H^n_{\mathfrak{a}}(M) = 0$.

In the course of our proof of the local Lichtenbaum-Hartshorne Vanishing Theorem, we shall reduce to the case where R is a complete local domain and then appeal to the structure theory of complete local rings: we shall again quote [35, Theorem 29.4] to deduce that there exists a complete regular local subring R' of R which is such that R is finitely generated as an R'-module. The next lemma will be applied to this situation.

8.1.6 Lemma. *Supppose that* $(R, \mathfrak{m})$ *is local, and that* $(R', \mathfrak{m}')$ *is a local subring of* R *which is such that* R *is finitely generated as an* R'*-module. Let* $\mathfrak{p} \in \operatorname{Spec}(R)$ *be such that* $\dim R/\mathfrak{p} = 1$. *There exists* $b \in R$ *such that, if* B *denotes the subring* $R'[b]$ *of* R, *then* $\sqrt{(\mathfrak{p} \cap B)R} = \mathfrak{p}$.

Proof. Of course, R is integral over R'. By the Incomparability Theorem (see [60, 13.33], for example), $\mathfrak{p}$ must be a minimal prime ideal of $(\mathfrak{p} \cap R')R$: let $\mathfrak{p}_2, \ldots, \mathfrak{p}_t$ be the other minimal prime ideals of $(\mathfrak{p} \cap R')R$ (there may be none). By the Prime Avoidance Theorem, there exists $b \in \mathfrak{p} \setminus \bigcup_{i=2}^{t} \mathfrak{p}_i$. Then $B := R'[b]$, necessarily a Noetherian ring, is finitely generated as an R'-module, and so is integral over R'.

To complete the proof, it is enough for us to show that $\mathfrak{p}$ is the one and only minimal prime ideal of $(\mathfrak{p} \cap B)R$. It certainly is one, since R is integral over B so that we can appeal to the Incomparability Theorem again, as we did at the beginning of this proof. Let us suppose that $\mathfrak{q}$ is another minimal prime ideal of $(\mathfrak{p} \cap B)R$, different from $\mathfrak{p}$.

Obviously $\mathfrak{q} \neq \mathfrak{m}$. Since R is integral over R', it follows that $\mathfrak{q} \cap R' \neq \mathfrak{m}'$ (by [60, 13.31], for example). Since $\mathfrak{p} \cap R' \subseteq \mathfrak{p} \cap B \subseteq \mathfrak{q}$, it follows that $\mathfrak{p} \cap R' \subseteq \mathfrak{q} \cap R' \subset \mathfrak{m}'$. But $R/\mathfrak{p}$ is an integral extension of $R'/(\mathfrak{p} \cap R')$, and so $\dim R'/(\mathfrak{p} \cap R') = \dim R/\mathfrak{p} = 1$. We can therefore deduce that $\mathfrak{p} \cap R' = \mathfrak{q} \cap R'$. Another use of the Incomparability Theorem as before shows that $\mathfrak{q}$ must be a minimal prime ideal of $(\mathfrak{p} \cap R')R$, and so must be one of $\mathfrak{p}_2, \ldots, \mathfrak{p}_t$. But $b \in \mathfrak{p} \cap R'[b] \subseteq (\mathfrak{p} \cap B)R \subseteq \mathfrak{q}$, and this is a contradiction because b was chosen outside $\mathfrak{p}_2 \cup \cdots \cup \mathfrak{p}_t$. □

In our application of Lemma 8.1.6 in which R' is a complete regular local ring, it will be important for us to know that the ring $B = R'[b]$ is a Gorenstein ring. This is the motivation behind the next lemma. In fact, the first part of this lemma is actually a special case of [60, Proposition 13.40], but we include a proof for the convenience of the reader.

8.1.7 Lemma. *Let R be a subring of the integral domain S, and suppose that R is integrally closed and $S = R[b]$, where $b \in S$ is integral over R. Let K be the field of fractions of R. Then b is algebraic over K and its minimal polynomial f over K belongs to $R[X]$. Also, the surjective ring homomorphism $\phi : R[X] \to R[b]$ given by evaluation at b has kernel $fR[X]$, so that ϕ induces an isomorphism of R-algebras*

$$\overline{\phi} : R[X]/fR[X] \xrightarrow{\cong} R[b] = S.$$

Proof. Since b is integral over R, it is certainly algebraic over K. Let its minimal polynomial over K be

$$f = X^h + a_{h-1}X^{h-1} + \cdots + a_1X + a_0 \in K[X].$$

We aim to show that $a_0, \ldots, a_{h-1} \in R$.

There exists a field extension L of the field of fractions of S such that f splits into linear factors in $L[X]$: let $s = s_1, \ldots, s_h \in L$ be such that

$$f = (X - s_1)(X - s_2)\ldots(X - s_h)$$

in $L[X]$. Equate coefficients to see that each of $a_0, \ldots, a_{h-1}$ can be written as a 'homogeneous polynomial' (in fact, a 'symmetric function') in $s_1, \ldots, s_h$ with coefficients ± 1; in particular, $a_0, \ldots, a_{h-1} \in R[s_1, \ldots, s_h]$.

Since b is integral over R, there exists

$$g = X^n + r_{n-1}X^{n-1} + \cdots + r_1 X + r_0 \in R[X]$$

such that $g(b) = 0$. Therefore $g \in \operatorname{Ker} \phi \subseteq fK[X]$, and so there exists $g_1 \in K[X]$ such that $g = fg_1$ in $K[X]$. For each $i = 1, \ldots, h$, evaluate both sides of this equation at $s_i \in L$ to see that $g(s_i) = 0$. Thus all the s_i $(i = 1, \ldots, h)$ are integral over R, and so, by [60, 13.21] for example, the ring $R[s_1, \ldots, s_h]$ is a finitely generated R-module; it therefore follows that $a_0, \ldots, a_{h-1}$ are all integral over R, since they belong to $R[s_1, \ldots, s_h]$. But $a_0, \ldots, a_{h-1} \in K$ and R is integrally closed; hence $a_0, \ldots, a_{h-1} \in R$.

Finally, $\operatorname{Ker} \phi = fK[X] \cap R[X]$, and it is elementary to deduce from the facts that f is monic and has all its coefficients in R that $fK[X] \cap R[X] = fR[X]$. □

8.1.8 Lemma. *Suppose that $(R, \mathfrak{m})$ is local and of dimension n, and also that R is a Gorenstein ring. Let M be a non-zero, finitely generated R-module. Then* $\operatorname{depth} M > 0$ *if and only if* $\operatorname{Ext}^n_R(M, R) = 0$.

Proof. Recall from [35, Theorem 18.1] that R has injective dimension n as a module over itself.

($\Rightarrow$) There exists $r \in \mathfrak{m}$ such that r is a non-zerodivisor on M. The exact sequence $0 \longrightarrow M \xrightarrow{r} M \longrightarrow M/rM \longrightarrow 0$ induces an exact sequence

$$\operatorname{Ext}^n_R(M/rM, R) \longrightarrow \operatorname{Ext}^n_R(M, R) \xrightarrow{r} \operatorname{Ext}^n_R(M, R) \longrightarrow 0$$

since $\operatorname{Ext}^{n+1}_R(M/rM, R) = 0$. Application of Nakayama's Lemma to the finitely generated R-module $\operatorname{Ext}^n_R(M, R)$ now shows that this module is zero.

($\Leftarrow$) By [35, Theorem 18.1], we have $\operatorname{Ext}^n_R(R/\mathfrak{m}, R) \neq 0$. It follows that $\mathfrak{m} \notin \operatorname{Ass} M$, for otherwise there would be an exact sequence

$$0 \longrightarrow R/\mathfrak{m} \longrightarrow M \longrightarrow C \longrightarrow 0$$

of R-modules, and the induced exact sequence

$$\operatorname{Ext}^n_R(M, R) \longrightarrow \operatorname{Ext}^n_R(R/\mathfrak{m}, R) \longrightarrow \operatorname{Ext}^{n+1}_R(C, R) = 0$$

would provide a contradiction. □

The next exercise extends Lemma 8.1.8 in a precise manner.

8.1.9 Exercise. Suppose that $(R, \mathfrak{m})$ is a Gorenstein local ring of dimension n. Let M be a non-zero, finitely generated R-module. Show that $\operatorname{depth} M$ is the least integer i such that $\operatorname{Ext}_R^{n-i}(M, R) \neq 0$.

The next lemma provides the promised solution for Exercise 3.1.4.

8.1.10 Lemma. *Let $(R, \mathfrak{m})$ be a complete local domain, and let $\mathfrak{p}$ be a prime ideal of R of dimension 1, that is, such that $\dim R/\mathfrak{p} = 1$.*

(i) *For each $n \in \mathbb{N}$, there exists $t \in \mathbb{N}$ such that $\mathfrak{p}^{(t)} \subseteq \mathfrak{m}^n$.*

(ii) *The family $(\mathfrak{p}^{(n)})_{n\in\mathbb{N}}$ is a system of ideals of R over $\mathbb{N}$ in the sense of 2.1.10, and the (negative strongly) connected sequences of covariant functors (from $\mathscr{C}(R)$ to $\mathscr{C}(R)$)*

$$\left(H^i_{\mathfrak{p}}\right)_{i\in\mathbb{N}_0} \quad \textit{and} \quad \left(\varinjlim_{j\in\mathbb{N}} \operatorname{Ext}^i_R(R/\mathfrak{p}^{(j)}, \cdot)\right)_{i\in\mathbb{N}_0}$$

are isomorphic.

Proof. Let $\psi : R \to R_{\mathfrak{p}}$ denote the natural homomorphism.

(i) Recall that $\mathfrak{p}^{(n)} := \psi^{-1}(\mathfrak{p}^n R_{\mathfrak{p}}) = \psi^{-1}\left((\mathfrak{p}R_{\mathfrak{p}})^n\right)$. Hence

$$\textstyle\bigcap_{n\in\mathbb{N}} \mathfrak{p}^{(n)} = \psi^{-1}\left(\bigcap_{n\in\mathbb{N}}(\mathfrak{p}R_{\mathfrak{p}})^n\right) = \psi^{-1}(0) = \operatorname{Ker}\psi,$$

by Krull's Intersection Theorem [35, Theorem 8.9]. Since R is a domain, it follows that $\bigcap_{n\in\mathbb{N}} \mathfrak{p}^{(n)} = 0$.

We can now use Chevalley's Theorem ([42, Section 5.2, Theorem 1] or [67, Chapter VIII, Section 5, Theorem 13]) to deduce that, for each $n \in \mathbb{N}$, there exists $t \in \mathbb{N}$ such that $\mathfrak{p}^{(t)} \subseteq \mathfrak{m}^n$.

(ii) Let $n \in \mathbb{N}$. Note that, by [60, 5.47(i)] for example, $\mathfrak{p}$ is the unique minimal prime ideal of $\mathfrak{p}^n$, and $\mathfrak{p}^{(n)}$ is the (uniquely determined) $\mathfrak{p}$-primary term in any minimal primary decomposition of $\mathfrak{p}^n$. Since $\dim R/\mathfrak{p} = 1$, the only possible associated prime ideal of $\mathfrak{p}^n$ in addition to $\mathfrak{p}$ is $\mathfrak{m}$. Thus either $\mathfrak{p}^n = \mathfrak{p}^{(n)}$, or there exists $h \in \mathbb{N}$ such that $\mathfrak{p}^{(n)} \cap \mathfrak{m}^h \subseteq \mathfrak{p}^n$. It now follows from part (i) that there exists $t \in \mathbb{N}$ such that $\mathfrak{p}^{(t)} \subseteq \mathfrak{p}^n$.

Of course, $\mathfrak{p}^n \subseteq \mathfrak{p}^{(n)}$ for all $n \in \mathbb{N}$. Since it is clear that $(\mathfrak{p}^{(n)})_{n\in\mathbb{N}}$ is an inverse family of ideals of R over $\mathbb{N}$ in the sense of 1.2.10, it now follows from Proposition 3.1.1(iii) that $(\mathfrak{p}^{(n)})_{n\in\mathbb{N}}$ is actually a system of ideals of R over $\mathbb{N}$, and from part (ii) of the same proposition that the negative strongly connected

sequences of covariant functors

$$\left(\varinjlim_{j\in\mathbb{N}} \operatorname{Ext}^i_R(R/\mathfrak{p}^j, \cdot\,)\right)_{i\in\mathbb{N}_0} \quad \text{and} \quad \left(\varinjlim_{j\in\mathbb{N}} \operatorname{Ext}^i_R(R/\mathfrak{p}^{(j)}, \cdot\,)\right)_{i\in\mathbb{N}_0}$$

are isomorphic. The proof can now be completed by an appeal to 1.3.8. □

8.2 The main theorem

We are now in a position to put all our various lemmas of Section 8.1 together to produce a proof of the main theorem of this chapter.

8.2.1 The Lichtenbaum-Hartshorne Vanishing Theorem. (See R. Hartshorne [21, Theorem 3.1].) *Suppose that* $(R, \mathfrak{m})$ *is local of dimension* n, *and also that* $\mathfrak{a}$ *is proper. Then the following statements are equivalent:*

(i) $H^n_{\mathfrak{a}}(R) = 0$;

(ii) *for each (necessarily minimal) prime ideal* $\mathfrak{P}$ *of* $\widehat{R}$, *the completion of* R, *satisfying* $\dim \widehat{R}/\mathfrak{P} = n$, *we have* $\dim \widehat{R}/(\mathfrak{a}\widehat{R} + \mathfrak{P}) > 0$.

Proof. (i) $\Rightarrow$ (ii) Assume that $H^n_{\mathfrak{a}}(R) = 0$ and that there exists a prime ideal $\mathfrak{P}$ of $\widehat{R}$ such that $\dim \widehat{R}/\mathfrak{P} = n$ but $\dim \widehat{R}/(\mathfrak{a}\widehat{R} + \mathfrak{P}) = 0$. Since the natural ring homomorphism $R \to \widehat{R}$ is flat, it follows from the Flat Base Change Theorem 4.3.2 that there is an $\widehat{R}$-isomorphism $H^n_{\mathfrak{a}}(R) \otimes_R \widehat{R} \cong H^n_{\mathfrak{a}\widehat{R}}(\widehat{R})$, and so $H^n_{\mathfrak{a}\widehat{R}}(\widehat{R}) = 0$.

Now $\mathfrak{m}\widehat{R}$ is the maximal ideal of the local ring $\widehat{R}$, and our assumptions mean that $(\widehat{R}/\mathfrak{P}, \mathfrak{m}\widehat{R}/\mathfrak{P})$ is an n-dimensional local ring and $(\mathfrak{a}\widehat{R} + \mathfrak{P})/\mathfrak{P}$ is an $(\mathfrak{m}\widehat{R}/\mathfrak{P})$-primary ideal of this ring. It therefore follows from 1.1.3 and Theorem 6.1.4 (or Theorem 7.3.2) that $H^n_{(\mathfrak{a}\widehat{R}+\mathfrak{P})/\mathfrak{P}}(\widehat{R}/\mathfrak{P}) \neq 0$. We now deduce from the Independence Theorem 4.2.1 that $H^n_{\mathfrak{a}\widehat{R}}(\widehat{R}/\mathfrak{P}) \neq 0$. Therefore, by 8.1.4, we must have $H^n_{\mathfrak{a}\widehat{R}}(\widehat{R}) \neq 0$, and this is a contradiction.

(ii) $\Rightarrow$ (i) Assume that $\dim \widehat{R}/(\mathfrak{a}\widehat{R} + \mathfrak{P}) > 0$ for each $\mathfrak{P} \in \operatorname{Spec}(\widehat{R})$ for which $\dim \widehat{R}/\mathfrak{P} = n$. We suppose also that $H^n_{\mathfrak{a}}(R) \neq 0$, and we again look for a contradiction. We again use the Flat Base Change Theorem 4.3.2 to see that there is an $\widehat{R}$-isomorphism

$$H^n_{\mathfrak{a}}(R) \otimes_R \widehat{R} \cong H^n_{\mathfrak{a}\widehat{R}}(\widehat{R}),$$

from which we deduce that $H^n_{\mathfrak{a}\widehat{R}}(\widehat{R}) \neq 0$ (because the natural ring homomorphism $R \to \widehat{R}$ is faithfully flat). We can therefore assume, in our search for a contradiction, that R is complete: we make this assumption in what follows.

There is an ascending chain

$$0 = \mathfrak{b}_0 \subset \mathfrak{b}_1 \subset \ldots \subset \mathfrak{b}_{h-1} \subset \mathfrak{b}_h = R$$

of ideals of R such that, for each $i = 1, \ldots, h$, there exists $\mathfrak{p}_i \in \operatorname{Spec}(R)$ with $\mathfrak{b}_i/\mathfrak{b}_{i-1} \cong R/\mathfrak{p}_i$. It follows from the half-exactness of $H^n_{\mathfrak{a}}$ that $H^n_{\mathfrak{a}}(R/\mathfrak{p}_i) \neq 0$ for at least one i between 1 and h. The Independence Theorem 4.2.1 now enables us to deduce that

$$H^n_{(\mathfrak{a}+\mathfrak{p}_i)/\mathfrak{p}_i}(R/\mathfrak{p}_i) \neq 0.$$

Note that, by Grothendieck's Vanishing Theorem 6.1.2, the complete local domain $R/\mathfrak{p}_i$ has dimension n. Therefore, our assumptions imply that

$$\dim(R/\mathfrak{p}_i)/((\mathfrak{a} + \mathfrak{p}_i)/\mathfrak{p}_i) > 0.$$

Therefore we can, and do, assume henceforth in our search for a contradiction that R is an n-dimensional complete local domain and the proper ideal $\mathfrak{a}$ satisfies $H^n_{\mathfrak{a}}(R) \neq 0$ and $\dim R/\mathfrak{a} > 0$. We shall show that such a situation is impossible.

By Lemma 8.1.3, there exists $\mathfrak{p} \in \operatorname{Spec}(R)$ such that $H^n_{\mathfrak{p}}(R) \neq 0$ and $\dim R/\mathfrak{p} = 1$. We now appeal to the structure theory of complete local rings: by [35, Theorem 29.4], there exists a complete regular local subring $(R', \mathfrak{m}')$ of R which is such that R is finitely generated as an R'-module. By Lemma 8.1.6, there exists $b \in R$ such that, if B denotes the subring $R'[b]$ of R, then $\sqrt{(\mathfrak{p} \cap B)R} = \mathfrak{p}$. Note that, since R is integral over B, the latter is also local and of dimension n, with unique maximal ideal $\mathfrak{m} \cap B$. Note also that, since B is a finitely generated R'-module, it is a complete local ring.

Since R' is integrally closed, it follows from Lemma 8.1.7 that there is a monic polynomial $f \in R'[X]$ and an isomorphism of R'-algebras

$$R'[X]/fR'[X] \cong R'[b] = B.$$

By [35, Theorem 19.5], the ring $R'[X]$ is regular. As f is monic, it is a non-zerodivisor in $R'[X]$. We now deduce that B is a Gorenstein local ring as follows. There exists exactly one maximal ideal $\mathfrak{Q}$ of $R'[X]$ that contains f; we have

$$B \cong (R'[X]/fR'[X])_{\mathfrak{Q}/fR'[X]} \cong R'[X]_{\mathfrak{Q}}/(f/1)R'[X]_{\mathfrak{Q}};$$

and the latter is a Gorenstein local ring by [35, Exercise 18.1].

Since $\sqrt{(\mathfrak{p} \cap B)R} = \mathfrak{p}$, we can deduce from 1.1.3 that $H^n_{(\mathfrak{p}\cap B)R}(R) \neq 0$, and thence by the Independence Theorem 4.2.1 that $H^n_{(\mathfrak{p}\cap B)}(R) \neq 0$. Therefore $H^n_{(\mathfrak{p}\cap B)}(B) \neq 0$ by Lemma 8.1.4. Let $\mathfrak{q} := \mathfrak{p} \cap B$; observe that, since R is integral over B, we have $\dim B/\mathfrak{q} = \dim R/\mathfrak{p} = 1$.

We are now close to a contradiction: B is a complete n-dimensional Gorenstein local domain, $\mathfrak{q} \in \operatorname{Spec}(B)$ has $\dim B/\mathfrak{q} = 1$, and $H^n_{\mathfrak{q}}(B) \neq 0$. This is, in fact, impossible, because, by Lemma 8.1.10(ii),

$$H^n_{\mathfrak{q}}(B) \cong \varinjlim_{j \in \mathbb{N}} \operatorname{Ext}^n_B(B/\mathfrak{q}^{(j)}, B)$$

and the latter module is zero by Lemma 8.1.8, since $\operatorname{depth} B/\mathfrak{q}^{(j)} > 0$ for all $j \in \mathbb{N}$ because each $\mathfrak{q}^{(j)}$ is a $\mathfrak{q}$-primary ideal. □

8.2.2 Corollary. *Suppose that $(R, \mathfrak{m})$ is local and has dimension n, and that $\dim \widehat{R}/(\mathfrak{a}\widehat{R} + \mathfrak{P}) > 0$ for every prime ideal $\mathfrak{P}$ of $\widehat{R}$ such that $\dim \widehat{R}/\mathfrak{P} = n$. Then $H^i_{\mathfrak{a}}(M) = 0$ for all $i \geq n$ and for every R-module M.*

Proof. This is now immediate from Grothendieck's Vanishing Theorem 6.1.2, Lemma 8.1.4, and the local Lichtenbaum-Hartshorne Vanishing Theorem 8.2.1. □

8.2.3 Exercise. Suppose that $(R, \mathfrak{m})$ is local and that M is a non-zero finitely generated R-module of dimension n. Assume that

$$\dim \widehat{R}/(\mathfrak{a}\widehat{R} + \mathfrak{P}) > 0$$

for every prime ideal $\mathfrak{P}$ of $\operatorname{Supp}_{\widehat{R}}(M \otimes_R \widehat{R})$ such that $\dim \widehat{R}/\mathfrak{P} = n$. Prove that $H^i_{\mathfrak{a}}(M) = 0$ for all $i \geq n$.

8.2.4 Exercise. Suppose that $(R, \mathfrak{m})$ is local and that A is an Artinian R-module. Show that, for each $a \in A$, there exists $t \in \mathbb{N}$ such that $\mathfrak{m}^t a = 0$. Deduce that A has a natural structure as a module over $\widehat{R}$, the completion of R, that a subset of A is an R-submodule if and only if it is an $\widehat{R}$-submodule, and that the map $\phi : A \to A \otimes_R \widehat{R}$ defined by $\phi(a) = a \otimes 1$ for all $a \in A$ is an isomorphism of $\widehat{R}$-modules.

The next two exercises involve the theory of secondary representation and attached primes of Artinian modules, discussed in Section 7.2.

8.2.5 Exercise. Let R' denote a second commutative Noetherian ring and let $f : R \to R'$ be a ring homomorphism. Suppose that the R'-module M' has a secondary representation (7.2.2). Show that, when M' is viewed as an R-module by means of f, it has a secondary representation as an R-module, and that

$$\operatorname{Att}_R M' = \left\{ f^{-1}(\mathfrak{p}') : \mathfrak{p}' \in \operatorname{Att}_{R'} M' \right\}.$$

Is it possible for M' to have fewer attached prime ideals as R-module than it has as R'-module? Justify your response.

8.2.6 Exercise. Suppose that $(R, \mathfrak{m})$ is local and has dimension n, and also that $\mathfrak{a}$ is proper. By Theorem 7.1.6, the R-module $H^n_{\mathfrak{a}}(R)$ is Artinian.

(i) Use the local Lichtenbaum-Hartshorne Vanishing Theorem 8.2.1 to prove that

$$\operatorname{Att}_R(H^n_{\mathfrak{a}}(R)) = \{\mathfrak{P} \cap R \ : \mathfrak{P} \in \operatorname{Spec}(\widehat{R}),\ \dim \widehat{R}/\mathfrak{P} = n, \\ \text{and } \dim \widehat{R}/(\mathfrak{a}\widehat{R} + \mathfrak{P}) = 0\}.$$

(It is perhaps worth pointing out that the result of this exercise (which is due to R. Y. Sharp [59, Corollary 3.5]) amounts, in effect, to a refinement of the statement of the local Lichtenbaum-Hartshorne Vanishing Theorem, because the set on the right hand side of the above display is empty if and only if $H^n_{\mathfrak{a}}(R) = 0$.)

(ii) Deduce that, if $n > 0$, then $H^n_{\mathfrak{a}}(R)$, if non-zero, is not finitely generated.

8.2.7 Remark. Let $n \in \mathbb{N}$ and let K be a field. This comment is concerned with the ring $K[X_1, \ldots, X_n]$ of polynomials over K.

Each $f \in K[X_1, \ldots, X_n] \setminus (X_1, \ldots, X_n)$ is a unit in $K[[X_1, \ldots, X_n]]$, and so there is a natural injective ring homomorphism

$$\phi : K[X_1, \ldots, X_n]_{(X_1, \ldots, X_n)} \longrightarrow K[[X_1, \ldots, X_n]].$$

It is not difficult to see that we can use ϕ to regard $K[[X_1, \ldots, X_n]]$ as the completion of the regular local ring $K[X_1, \ldots, X_n]_{(X_1, \ldots, X_n)}$. Let $\mathfrak{m}$ denote the maximal ideal $(X_1, \ldots, X_n)$ of $K[X_1, \ldots, X_n]$.

It follows that, if $\mathfrak{b}$ is an ideal of $K[X_1, \ldots, X_n]$ contained in $\mathfrak{m}$, and, for each $i = 1, \ldots, n$, we use x_i to denote the natural image of X_i in $K[X_1, \ldots, X_n]/\mathfrak{b}$, then the injective ring homomorphism

$$K[x_1, \ldots, x_n]_{(x_1, \ldots, x_n)} \longrightarrow K[[X_1, \ldots, X_n]]/\mathfrak{b}K[[X_1, \ldots, X_n]]$$

obtained by composing the natural ring isomorphism

$$\begin{aligned} K[x_1, \ldots, x_n]_{(x_1, \ldots, x_n)} &= (K[X_1, \ldots, X_n]/\mathfrak{b})_{\mathfrak{m}/\mathfrak{b}} \\ &\xrightarrow{\cong} K[X_1, \ldots, X_n]_{\mathfrak{m}}/\mathfrak{b}K[X_1, \ldots, X_n]_{\mathfrak{m}} \end{aligned}$$

with the injective ring homomorphism

$$K[X_1, \ldots, X_n]_{\mathfrak{m}}/\mathfrak{b}K[X_1, \ldots, X_n]_{\mathfrak{m}} \longrightarrow K[[X_1, \ldots, X_n]]/\mathfrak{b}K[[X_1, \ldots, X_n]]$$

induced by ϕ provides the completion of $K[x_1, \ldots, x_n]_{(x_1, \ldots, x_n)}$.

8.2.8 Exercise. Consider the special case of the situation of Remark 8.2.7 in which $n = 3$ and $\mathfrak{b} = (X_1X_2)$. With these choices, let

$$R := K[x_1, x_2, x_3]_{(x_1,x_2,x_3)} = (K[X_1, X_2, X_3]/(X_1X_2))_{(X_1,X_2,X_3)/(X_1X_2)}.$$

Let $\mathfrak{p}$ be the prime ideal $(x_1/1, x_3/1)$ of R. Use the exact sequence

$$0 \longrightarrow R \longrightarrow R/(x_1/1) \oplus R/(x_2/1) \longrightarrow R/(x_1/1, x_2/1) \longrightarrow 0$$

of Lemma 3.2.1 to show that $H^2_{\mathfrak{p}}(R)$ is not finitely generated. Use the description of the completion $\widehat{R}$ of R provided by 8.2.7 to find a prime ideal $\mathfrak{P}$ of $\widehat{R}$ such that $\dim \widehat{R}/\mathfrak{P} = 2$ but $\dim \widehat{R}/(\mathfrak{p}\widehat{R} + \mathfrak{P}) = 0$.

8.2.9 Exercise. Consider the special case of the situation of Remark 8.2.7 in which K has characteristic 0, $n = 3$ and $\mathfrak{b} = (X_2^2 - X_1^2 - X_1^3)$. Set $R' := K[X_1, X_2, X_3]$ and $\mathfrak{m}' := (X_1, X_2, X_3)$. Let

$$\mathfrak{c} := (X_1 + X_2 - X_2X_3)R' + ((X_3 - 1)^2(X_1 + 1) - 1)R'.$$

(i) Show that $\mathfrak{b} \in \operatorname{Spec}(R')$, that $\mathfrak{b} \subseteq \mathfrak{c}$, and also that $\mathfrak{c}R'_{\mathfrak{m}'} \in \operatorname{Spec}(R'_{\mathfrak{m}'})$. (Here is a hint: do not forget that $R'_{\mathfrak{m}'}$ is a regular local ring.)

(ii) Follow the procedure of 8.2.7, and set

$$R := (R'/\mathfrak{b})_{\mathfrak{m}'/\mathfrak{b}} \quad \text{and} \quad \widehat{R} = K[[X_1, X_2, X_3]]/\mathfrak{b}K[[X_1, X_2, X_3]];$$

regard $\widehat{R}$ as the completion of R in the manner described in 8.2.7. It will be convenient to use x_i to denote the natural image of X_i in $R'/\mathfrak{b}$ and in $\widehat{R}$ (for $i = 1, 2, 3$). Show that R is a 2-dimensional local domain, and that

$$\mathfrak{p} := (x_1 + x_2 - x_2x_3)R + ((x_3 - 1)^2(x_1 + 1) - 1)R$$

is a prime ideal of R with $\dim R/\mathfrak{p} = 1$.

(iii) Let $u \in \widehat{R}$ be given by

$$u := 1 + \frac{1}{2}x_1 - \frac{1}{8}x_1^2 + \frac{1}{16}x_1^3 - \frac{5}{128}x_1^4 + \cdots + \frac{(-1)^{n-1}2(2n-2)!}{4^n n!(n-1)!}x_1^n + \cdots,$$

so that u is a unit of $\widehat{R}$ and $u^2 = 1 + x_1$. Show that

$$\mathfrak{p}\widehat{R} = (x_1 + x_2 - x_2x_3)\widehat{R} + (x_3 - 1 + u^{-1})\widehat{R},$$

and that this is a prime ideal of $\widehat{R}$.

(iv) Use the exact sequence

$$0 \longrightarrow \widehat{R} \longrightarrow \widehat{R}/(x_2 - x_1u) \oplus \widehat{R}/(x_2 + x_1u) \longrightarrow \widehat{R}/(x_2 - x_1u, x_2 + x_1u) \longrightarrow 0$$

of Lemma 3.2.1 to show that $H^2_{\mathfrak{p}\widehat{R}}(\widehat{R})$ is not finitely generated, and deduce that $H^2_{\mathfrak{p}}(R)$ is not finitely generated.

(v) Find a prime ideal $\mathfrak{P}$ of $\widehat{R}$ such that $\dim \widehat{R}/\mathfrak{P} = 2$ but

$$\dim \widehat{R}/(\mathfrak{p}\widehat{R} + \mathfrak{P}) = 0.$$

8.2.10 Definition and ♯Exercise. Suppose that $(R, \mathfrak{m})$ is local. We say that R is *analytically irreducible* precisely when $\widehat{R}$, the completion of R, is an integral domain.

Note that an analytically irreducible local ring must itself be a domain.

Suppose that $(R, \mathfrak{m})$ is analytically irreducible, and that $\mathfrak{a}$ is proper. Let $\dim R = n$. Show that $H^n_{\mathfrak{a}}(R) = 0$ if and only if $\dim R/\mathfrak{a} > 0$, and that, when this is the case, $H^i_{\mathfrak{a}}(M) = 0$ for all $i \geq n$ and for every R-module M.

8.2.11 Exercise. Suppose that $(R, \mathfrak{m})$ is an analytically irreducible (see 8.2.10 above) local domain of dimension 2, and that $\dim R/\mathfrak{a} > 0$. Show that the $\mathfrak{a}$-transform functor $D_{\mathfrak{a}}$ is exact.

8.2.12 Exercise. Show by means of an example that if the phrase 'analytically irreducible' is omitted from the hypotheses in Exercise 8.2.11 above, then the resulting statement is no longer always true.

8.2.13 Exercise: Hartshorne's Example revisited yet again. For this exercise, we recommend that the reader refers to earlier discussions of Hartshorne's Example in 2.3.7, 3.3.4 and 4.3.7, and applies the ideas of Remark 8.2.7 in the special case in which $n = 3$ and

$$\mathfrak{b} = \sqrt{(X_1X_4 - X_2X_3,\ X_1^2X_3 + X_1X_2 - X_2^2,\ X_3^3 + X_3X_4 - X_4^2)}.$$

Let S' denote the subring $\mathbb{C}[X, XY, Y(Y-1), Y^2(Y-1)]$ of $\mathbb{C}[X, Y]$. Consider the ideals

$$\mathfrak{n} := (X, XY, Y(Y-1), Y^2(Y-1)) \quad \text{and} \quad \mathfrak{r} := (XY, Y(Y-1), Y^2(Y-1))$$

of S'.

(i) Show that $\mathfrak{r}S'_{\mathfrak{q}}$ is a principal ideal of $S'_{\mathfrak{q}}$ for every maximal ideal $\mathfrak{q}$ of S' different from $\mathfrak{n}$.

(ii) Show that $S := S'_{\mathfrak{n}}$ is a local domain of dimension 2, and that $\mathfrak{p} := \mathfrak{r}S'_{\mathfrak{n}}$ is a prime ideal of S such that $\dim S/\mathfrak{p} = 1$.

(iii) Use a calculation made at the end of 3.3.4 to show that $H^2_{\mathfrak{p}}(S) \neq 0$.

(iv) Use the description of the completion $(\widehat{S}, \widehat{\mathfrak{M}})$ of S provided by Remark 8.2.7, together with calculations made in 4.3.7, to see that $\widehat{S}$ has exactly two minimal prime ideals, $\mathfrak{P}_1$ and $\mathfrak{P}_2$ say, and that

$$\mathfrak{P}_1 + \mathfrak{P}_2 = \widehat{\mathfrak{M}} \quad \text{and} \quad \mathfrak{P}_i + \mathfrak{p}\widehat{S} = \widehat{\mathfrak{M}} \text{ for } i = 1 \text{ or } 2.$$

Show that $H^2_{\mathfrak{p}\widehat{S}}(\widehat{S})$ is not finitely generated, and deduce that $H^2_{\mathfrak{p}}(S)$ is not finitely generated.

8.2.14 Exercise. Let R be the localization $\mathbb{C}[X, Y^2, XY, Y^3]_{(X,Y^2,XY,Y^3)}$ of the subring $\mathbb{C}[X, Y^2, XY, Y^3]$ of $\mathbb{C}[X, Y]$. Show that $H^2_{\mathfrak{a}}(R) = 0$ for every ideal $\mathfrak{a}$ of R which is not primary to the maximal ideal.

8.2.15 Definition and Exercise. Let V be a quasi-affine variety over an algebraically closed field K, and let $p \in V$.

We say that V is *analytically irreducible at* p precisely when the completion $\widehat{\mathcal{O}_{V,p}}$ of the local ring $\mathcal{O}_{V,p}$ of V at p is an integral domain, that is, if and only if $\mathcal{O}_{V,p}$ is analytically irreducible (see 8.2.10); otherwise, we say that V is *analytically reducible at* p.

(i) Now let V be an affine surface over K (that is, an affine algebraic variety over K of dimension 2), and let $C \subset V$ be a (not necessarily irreducible) curve (that is, a non-empty closed subset of pure codimension 1 in V (see 6.4.2(iv))) which avoids all the points of V at which V is analytically reducible. Use Serre's Affineness Criterion 6.4.4 to show that the quasi-affine variety $V \setminus C$ is, in fact, affine.

(ii) By considering Hartshorne's Example (see 2.3.7, 3.3.4, 4.3.7 and (especially) 6.4.6), show that the condition that C 'avoids all the points of V at which V is analytically reducible' cannot be omitted from the hypotheses of the result established in part (i) above.

8.2.16 Exercise. Let V be an affine surface over an algebraically closed field K; let $C \subset V$ be a (not necessarily irreducible) curve (see 8.2.15(i)). Let $\mathfrak{b}$ be the ideal of C in $\mathcal{O}(V)$ and let $p \in C$. We say that C is *fully branched in* V *at* p precisely when $\dim \widehat{\mathcal{O}_{V,p}}/(\mathfrak{b}\widehat{\mathcal{O}_{V,p}} + \mathfrak{P}) > 0$ for all minimal primes $\mathfrak{P}$ of $\widehat{\mathcal{O}_{V,p}}$ satisfying $\dim \widehat{\mathcal{O}_{V,p}}/\mathfrak{P} = 2$.

(i) Show that C is fully branched in V at p if and only if

$$H^2_{\mathfrak{b}\mathcal{O}_{V,p}}(\mathcal{O}_{V,p}) = 0.$$

(ii) Show that $V \setminus C$ is affine if and only if C is fully branched in V at all its points.

8.2.17 Exercise. This exercise is concerned with the situation of Exercise 8.2.9, and so we use the notation of that exercise. It was not necessary in 8.2.9 for the reader to know that the ideal $\mathfrak{c}$ is actually prime, but, in fact, it is and the first three parts of this exercise sketch a route to a proof of this fact.

(i) Note that $K[X_1, X_2, X_3] = K[\widetilde{X}_1, X_2, \widetilde{X}_3]$, where $\widetilde{X}_1 = X_1 + 1$ and $\widetilde{X}_3 = X_3 - 1$. Note also that $\widetilde{X}_1, X_2, \widetilde{X}_3$ are algebraically independent over K.

(ii) Set $A := K[\widetilde{X}_1, X_2, \widetilde{X}_3]/(\widetilde{X}_3^2\widetilde{X}_1 - 1)$; consider $A_0 := K[\widetilde{X}_3]_{\widetilde{X}_3}$ and $K[X_2, \widetilde{X}_3]_{\widetilde{X}_3}$ as subrings of $K(X_2, \widetilde{X}_3)$ in the natural ways. Show that

$$A \cong K[X_2, \widetilde{X}_3]_{\widetilde{X}_3} = A_0[X_2].$$

(iii) Show that

$$\begin{aligned} &K[\widetilde{X}_1, X_2, \widetilde{X}_3]/(\widetilde{X}_1 - X_2\widetilde{X}_3 - 1, \widetilde{X}_3^2\widetilde{X}_1 - 1) \\ &\qquad \cong K[X_2, \widetilde{X}_3]_{\widetilde{X}_3}/(X_2 + \widetilde{X}_3^{-1} - \widetilde{X}_3^{-3}) \cong A_0, \end{aligned}$$

and deduce that $\mathfrak{c}$ is a prime ideal of $K[X_1, X_2, X_3]$.

(iv) Now assume that K is algebraically closed.

Let $C := V_{\mathbb{A}^3(K)}(X_1 + X_2 - X_2X_3,\ (X_3 - 1)^2(X_1 + 1) - 1)$ and

$$V := V_{\mathbb{A}^3(K)}(X_2^2 - X_1^2 - X_1^3).$$

Show that $C \subseteq V$ and (with or without the aid of Exercise 8.2.16 above) that $V \setminus C$ is not affine.

9

The Annihilator and Finiteness Theorems

There have been several examples earlier in this book of non-finitely generated local cohomology modules of finitely generated modules: for example, in 6.1.6, and also in 7.3.3, we saw that if $(R, \mathfrak{m})$ is local, and N is a non-zero, finitely generated R-module of dimension $n > 0$, then $H^n_{\mathfrak{m}}(N)$ is not finitely generated. Since $H^0_{\mathfrak{m}}(N)$, being isomorphic to a submodule of N, is certainly finitely generated, it becomes of interest to identify the least integer i for which $H^i_{\mathfrak{m}}(N)$ is not finitely generated. This integer is referred to as the finiteness dimension $f_{\mathfrak{m}}(N)$ of N relative to $\mathfrak{m}$. Our work in this chapter on Grothendieck's Finiteness Theorem will enable us to see that, in this situation, and under mild restrictions on R,

$$f_{\mathfrak{m}}(N) = \min\left\{\operatorname{depth}_{R_{\mathfrak{p}}} N_{\mathfrak{p}} + \dim R/\mathfrak{p} : \mathfrak{p} \in \operatorname{Supp}(N) \setminus \{\mathfrak{m}\}\right\}.$$

However, our approach will not restrict attention to the case where the ideal with respect to which local cohomology is calculated is the maximal ideal of a local ring; also, the approach we shall take will show that questions about such finiteness dimensions are intimately related to questions about precisely which ideals annihilate local cohomology modules. We shall, in fact, establish Grothendieck's Finiteness Theorem as a special case of Faltings' Annihilator Theorem, which is concerned with the following question: given a second ideal $\mathfrak{b}$ of R such that $\mathfrak{b} \subseteq \mathfrak{a}$, and given a finitely generated R-module M, is there a greatest integer i for which $H^i_{\mathfrak{a}}(M)$ is annihilated by some power of $\mathfrak{b}$, and, if so, what is it?

9.1 Finiteness dimensions

Our first two results will provide motivation for the formal introduction of the concept of finiteness dimension. Let M be a finitely generated R-module. It is

clear that if, for some $i \in \mathbb{N}$, the local cohomology module $H^i_{\mathfrak{a}}(M)$ is finitely generated, then $\mathfrak{a}^u H^i_{\mathfrak{a}}(M) = 0$ for some $u \in \mathbb{N}$, and so

$$\mathfrak{a} \subseteq \sqrt{(0 : H^i_{\mathfrak{a}}(M))}.$$

It is not quite so clear that there is a sort of converse to this result: we show below, in our first proposition of this chapter, that if, for some $t \in \mathbb{N}$, it is the case that $\mathfrak{a} \subseteq \sqrt{(0 : H^i_{\mathfrak{a}}(M))}$ for all $i < t$, then it follows that $H^i_{\mathfrak{a}}(M)$ is finitely generated for all $i < t$.

9.1.1 Lemma. *Let $L \xrightarrow{f} M \xrightarrow{g} N$ be an exact sequence of R-modules and R-homomorphisms, and suppose that $\mathfrak{a} \subseteq \sqrt{(0 : L)}$ and $\mathfrak{a} \subseteq \sqrt{(0 : N)}$. Then $\mathfrak{a} \subseteq \sqrt{(0 : M)}$ also.*

Proof. Let $r \in \mathfrak{a}$. Then, for some $t \in \mathbb{N}$, we have $r^t g(M) = 0$, and so $r^t M \subseteq \operatorname{Ker} g = \operatorname{Im} f$. However, there exists $u \in \mathbb{N}$ such that $r^u L = 0$, and so $r^u(\operatorname{Im} f) = 0$. Hence $r^{u+t} M = 0$. □

9.1.2 Proposition. *Let M be a finitely generated R-module, and let $t \in \mathbb{N}$. Then the following statements are equivalent:*

(i) *$H^i_{\mathfrak{a}}(M)$ is finitely generated for all $i < t$;*

(ii) *$\mathfrak{a} \subseteq \sqrt{(0 : H^i_{\mathfrak{a}}(M))}$ for all $i < t$.*

Proof. (i) $\Rightarrow$ (ii) As we remarked immediately before the statement of Lemma 9.1.1, this implication is clear.

(ii) $\Rightarrow$ (i) We use induction on t. When $t = 1$, there is nothing to prove, since $H^0_{\mathfrak{a}}(M) = \Gamma_{\mathfrak{a}}(M)$ is a submodule of M, and so is finitely generated. So suppose that $t > 1$ and that the result has been proved for smaller values of t. By this inductive assumption, $H^i_{\mathfrak{a}}(M)$ is finitely generated for $i = 0, 1, \ldots, t-2$, and it only remains for us to prove that $H^{t-1}_{\mathfrak{a}}(M)$ is finitely generated.

It follows from 2.1.7(iii) that $H^i_{\mathfrak{a}}(M) \cong H^i_{\mathfrak{a}}(M/\Gamma_{\mathfrak{a}}(M))$ for all $i > 0$. Also, $M/\Gamma_{\mathfrak{a}}(M)$ is an $\mathfrak{a}$-torsion-free R-module, by 2.1.2. Hence we can (and do) assume that M is an $\mathfrak{a}$-torsion-free R-module.

We now use 2.1.1(ii) to deduce that $\mathfrak{a}$ contains an element r which is a non-zerodivisor on M. Since $\mathfrak{a} \subseteq \sqrt{(0 : H^{t-1}_{\mathfrak{a}}(M))}$, there exists $u \in \mathbb{N}$ such that $r^u H^{t-1}_{\mathfrak{a}}(M) = 0$. The exact sequence

$$0 \longrightarrow M \xrightarrow{r^u} M \longrightarrow M/r^u M \longrightarrow 0$$

induces a long exact sequence

$$\begin{array}{ccccccc}
0 & \longrightarrow & H^0_{\mathfrak{a}}(M) & \xrightarrow{r^u} & H^0_{\mathfrak{a}}(M) & \longrightarrow & H^0_{\mathfrak{a}}(M/r^uM) \\
 & \longrightarrow & H^1_{\mathfrak{a}}(M) & \xrightarrow{r^u} & H^1_{\mathfrak{a}}(M) & \longrightarrow & H^1_{\mathfrak{a}}(M/r^uM) \\
 & \longrightarrow & \cdots & & & & \cdots \\
 & \longrightarrow & H^i_{\mathfrak{a}}(M) & \xrightarrow{r^u} & H^i_{\mathfrak{a}}(M) & \longrightarrow & H^i_{\mathfrak{a}}(M/r^uM) \\
 & \longrightarrow & H^{i+1}_{\mathfrak{a}}(M) & \longrightarrow & \cdots .
\end{array}$$

It follows from this long exact sequence and 9.1.1 that

$$\mathfrak{a} \subseteq \sqrt{(0 : H^i_{\mathfrak{a}}(M/r^uM))} \qquad \text{for all } i < t-1,$$

so that, by the inductive hypothesis, $H^i_{\mathfrak{a}}(M/r^uM)$ is finitely generated for all $i < t-1$. In particular, we see that $H^{t-2}_{\mathfrak{a}}(M/r^uM)$ is finitely generated; since $r^uH^{t-1}_{\mathfrak{a}}(M) = 0$, it follows from the above long exact sequence that $H^{t-1}_{\mathfrak{a}}(M)$ is a homomorphic image of $H^{t-2}_{\mathfrak{a}}(M/r^uM)$, and so is finitely generated. This completes the inductive step. □

Proposition 9.1.2 provides some motivation for the following definition. Here, and throughout the book, we adopt the convention that the infimum of the empty set of integers is to be taken as ∞.

9.1.3 Definition. Let M be a finitely generated R-module. In the light of Proposition 9.1.2, we define the *finiteness dimension* $f_{\mathfrak{a}}(M)$ *of* M *relative to* $\mathfrak{a}$ by

$$\begin{aligned} f_{\mathfrak{a}}(M) &= \inf\left\{i \in \mathbb{N} : H^i_{\mathfrak{a}}(M) \text{ is not finitely generated}\right\} \\ &= \inf\left\{i \in \mathbb{N} : \mathfrak{a} \nsubseteq \sqrt{(0 : H^i_{\mathfrak{a}}(M))}\right\}. \end{aligned}$$

Note that $f_{\mathfrak{a}}(M)$ is either a positive integer or ∞, and that, since $H^0_{\mathfrak{a}}(M)$ is finitely generated,

$$f_{\mathfrak{a}}(M) = \inf\left\{i \in \mathbb{N}_0 : H^i_{\mathfrak{a}}(M) \text{ is not finitely generated}\right\}.$$

9.1.4 Exercise. Let M be a finitely generated R-module. Show that $f_{\mathfrak{a}}(M) > 1$ if and only if the $\mathfrak{a}$-transform $D_{\mathfrak{a}}(M)$ is finitely generated.

In the situation of 9.1.3, it is reasonable to regard the condition

$$\text{‘}\mathfrak{a} \subseteq \sqrt{(0 : H^i_{\mathfrak{a}}(M))}\text{’}$$

as asserting that $H^i_{\mathfrak{a}}(M)$ is ‘small’ in a sense, because if this condition holds for all i less than some positive integer t, then $H^i_{\mathfrak{a}}(M)$ is finitely generated for all

$i < t$ (by 9.1.2). However, sometimes it is more realistic to hope for a weaker condition than '$\mathfrak{a} \subseteq \sqrt{(0 : H^i_{\mathfrak{a}}(M))}$': we introduce a second ideal $\mathfrak{b}$ of R such that $\mathfrak{b} \subseteq \mathfrak{a}$, and think of $H^i_{\mathfrak{a}}(M)$ as being 'small' relative to $\mathfrak{b}$ if $\mathfrak{b} \subseteq \sqrt{(0 : H^i_{\mathfrak{a}}(M))}$.

9.1.5 Definition. Let M be a finitely generated R-module and let $\mathfrak{b}$ be a second ideal of R such that $\mathfrak{b} \subseteq \mathfrak{a}$. We define the $\mathfrak{b}$-*finiteness dimension* $f^{\mathfrak{b}}_{\mathfrak{a}}(M)$ *of* M *relative to* $\mathfrak{a}$ by

$$f^{\mathfrak{b}}_{\mathfrak{a}}(M) := \inf\left\{i \in \mathbb{N} : \mathfrak{b} \nsubseteq \sqrt{(0 : H^i_{\mathfrak{a}}(M))}\right\}.$$

Note that, since $\mathfrak{b} \subseteq \mathfrak{a} \subseteq \sqrt{(0 : \Gamma_{\mathfrak{a}}(M))}$, we can write

$$f^{\mathfrak{b}}_{\mathfrak{a}}(M) := \inf\left\{i \in \mathbb{N}_0 : \mathfrak{b} \nsubseteq \sqrt{(0 : H^i_{\mathfrak{a}}(M))}\right\},$$

that $f^{\mathfrak{b}}_{\mathfrak{a}}(M)$ is either a positive integer or ∞, and that $f^{\mathfrak{a}}_{\mathfrak{a}}(M) = f_{\mathfrak{a}}(M)$.

9.1.6 ♯Exercise. Let the situation be as in 9.1.5, and let S be a multiplicatively closed subset of R. Show that

$$f^{\mathfrak{b}}_{\mathfrak{a}}(M) \leq f^{S^{-1}\mathfrak{b}}_{S^{-1}\mathfrak{a}}(S^{-1}M).$$

9.1.7 ♯Exercise. Let R' be a second commutative Noetherian ring and let $f : R \to R'$ be a ring homomorphism; assume that R', when regarded as an R-module by means of f, is finitely generated.

Let M' be a finitely generated R'-module and let $\mathfrak{b}$ be a second ideal of R such that $\mathfrak{b} \subseteq \mathfrak{a}$. Prove that

$$f^{\mathfrak{b}}_{\mathfrak{a}}(M') = f^{\mathfrak{b}R'}_{\mathfrak{a}R'}(M').$$

9.1.8 Exercise. Let the situation be as in 9.1.5, and let $\mathfrak{d}$ be a further ideal of R such that $\mathfrak{a} \subseteq \mathfrak{d}$. Show that

$$f^{\mathfrak{b}}_{\mathfrak{a}}(M) \leq f^{\mathfrak{b}}_{\mathfrak{d}}(M).$$

(Here is a hint: you may find 8.1.2 helpful.)

9.2 Adjusted depths

The $\mathfrak{b}$-finiteness dimension $f^{\mathfrak{b}}_{\mathfrak{a}}(M)$ of 9.1.5 is one of the invariants used in Faltings' Annihilator Theorem. We now motivate the introduction of another of the ingredients. This motivation concerns the situation of Exercise 7.3.4, and we provide now a solution to the second part of that exercise.

Let M be a finitely generated R-module for which the ideal $\mathfrak{a} + (0 : M)$ is proper. Let $\mathfrak{p}$ be a minimal prime of $\mathfrak{a} + (0 : M)$, and suppose that $t :=$

$\dim_{R_\mathfrak{p}} M_\mathfrak{p} > 0$. Then, by 4.3.3, 4.2.2, and 1.1.3 used in conjunction with the fact that $\mathfrak{p}$ is a minimal prime of $\mathfrak{a} + (0 : M)$, we have

$$\begin{aligned}(H^t_\mathfrak{a}(M))_\mathfrak{p} \cong H^t_{\mathfrak{a}R_\mathfrak{p}}(M_\mathfrak{p}) &\cong H^t_{\mathfrak{a}R_\mathfrak{p}+(0:_{R_\mathfrak{p}} M_\mathfrak{p})}(M_\mathfrak{p}) \\ &= H^t_{(\mathfrak{a}+(0:M))R_\mathfrak{p}}(M_\mathfrak{p}) = H^t_{\mathfrak{p}R_\mathfrak{p}}(M_\mathfrak{p}).\end{aligned}$$

By 7.3.3, this $R_\mathfrak{p}$-module is not finitely generated, since $t := \dim_{R_\mathfrak{p}} M_\mathfrak{p} > 0$; hence $H^t_\mathfrak{a}(M)$ is not finitely generated. We can therefore write $f_\mathfrak{a}(M) \leq t$. There exists a minimal prime $\mathfrak{q}$ of $(0 : M)$ such that $\mathfrak{q} \subset \mathfrak{p}$ and $\operatorname{ht} \mathfrak{p}/\mathfrak{q} = t$. Note that $\operatorname{depth}_{R_\mathfrak{q}} M_\mathfrak{q} = 0$, that $\mathfrak{a} \nsubseteq \mathfrak{q}$, and that $\mathfrak{p}$ is a minimal prime of $\mathfrak{a}+\mathfrak{q}$; furthermore, we can write $f_\mathfrak{a}(M) \leq \operatorname{depth}_{R_\mathfrak{q}} M_\mathfrak{q} + \operatorname{ht} \mathfrak{p}/\mathfrak{q}$.

Next suppose that $r \in R$ is a non-zerodivisor on M and that there is a minimal prime $\mathfrak{p}'$ of $\mathfrak{a} + (0 : M/rM)$ such that $t' := \dim_{R_{\mathfrak{p}'}}(M/rM)_{\mathfrak{p}'} > 0$. Another application of Exercise 7.3.4 yields that $H^{t'}_\mathfrak{a}(M/rM)$ is not finitely generated. It therefore follows from the long exact sequence of local cohomology modules induced by the exact sequence

$$0 \longrightarrow M \xrightarrow{r} M \longrightarrow M/rM \longrightarrow 0$$

that either $H^{t'}_\mathfrak{a}(M)$ or $H^{t'-1}_\mathfrak{a}(M)$ is not finitely generated. The reasoning in the preceding paragraph applied to M/rM (rather than M) shows that there exists a minimal prime $\mathfrak{q}'$ of $(0 : M/rM)$ such that $\mathfrak{q}' \subset \mathfrak{p}'$ and $\operatorname{ht} \mathfrak{p}'/\mathfrak{q}' = t'$. Again, note that $\operatorname{depth}_{R_{\mathfrak{q}'}} M_{\mathfrak{q}'} = 1$, that $\mathfrak{a} \nsubseteq \mathfrak{q}'$, that $\mathfrak{p}'$ is a minimal prime of $\mathfrak{a} + \mathfrak{q}'$, and that

$$f_\mathfrak{a}(M) \leq 1 + t' = \operatorname{depth}_{R_{\mathfrak{q}'}} M_{\mathfrak{q}'} + \operatorname{ht} \mathfrak{p}'/\mathfrak{q}'.$$

It is hoped that, after this little discussion, the reader will not be too dismayed to find that we now begin to consider the values of the expressions

$$\operatorname{depth}_{R_\mathfrak{s}} M_\mathfrak{s} + \operatorname{ht}(\mathfrak{a} + \mathfrak{s})/\mathfrak{s}$$

for prime ideals $\mathfrak{s} \in \operatorname{Supp}(M)$ which do not contain $\mathfrak{a}$. (Here, $\operatorname{ht} R/\mathfrak{s}$ is to be interpreted as ∞.) Note that, for such an $\mathfrak{s}$, we have $\operatorname{ht}(\mathfrak{a} + \mathfrak{s})/\mathfrak{s} > 0$, since $(\mathfrak{a} + \mathfrak{s})/\mathfrak{s}$ is a non-zero ideal of the integral domain $R/\mathfrak{s}$. We can think, loosely, of $\operatorname{ht}(\mathfrak{a} + \mathfrak{s})/\mathfrak{s}$ as the 'distance' from $\mathfrak{s}$ to $\operatorname{Var}(\mathfrak{a})$ in $\operatorname{Spec}(R)$, as it is, at least in the case when R is catenary (see [35, p. 31]), the minimum length of a saturated ascending chain of prime ideals starting with $\mathfrak{s}$ (as its smallest term) and ending in $\operatorname{Var}(\mathfrak{a})$.

9.2.1 Notation and Conventions. Let M be a finitely generated R-module. For $\mathfrak{p} \in \operatorname{Supp}(M)$ we shall abbreviate $\operatorname{depth}_{R_\mathfrak{p}} M_\mathfrak{p}$ by $\operatorname{depth} M_\mathfrak{p}$; we shall adopt the convention that the depth of a zero module over a local ring is ∞, and accordingly, for $\mathfrak{p} \in \operatorname{Spec}(R) \setminus \operatorname{Supp}(M)$, we shall write $\operatorname{depth} M_\mathfrak{p} = \infty$.

We interpret the height of the improper ideal R of R as ∞; accordingly, for a proper ideal $\mathfrak{d}$ of R, we write $\operatorname{ht} R/\mathfrak{d} = \infty$.

9.2.2 Definitions. Let M be a finitely generated R-module. For a prime ideal $\mathfrak{p} \in \operatorname{Spec}(R) \setminus \operatorname{Var}(\mathfrak{a})$, the $\mathfrak{a}$-*adjusted depth of* M *at* $\mathfrak{p}$, denoted $\operatorname{adj}_{\mathfrak{a}} \operatorname{depth} M_{\mathfrak{p}}$, is defined by

$$\operatorname{adj}_{\mathfrak{a}} \operatorname{depth} M_{\mathfrak{p}} := \operatorname{depth} M_{\mathfrak{p}} + \operatorname{ht}(\mathfrak{a} + \mathfrak{p})/\mathfrak{p}.$$

Note that this is ∞ unless $\mathfrak{p} \in \operatorname{Supp}(M)$ and $\mathfrak{a} + \mathfrak{p} \subset R$, and then it is a positive integer.

Let $\mathfrak{b}$ be a second ideal of R such that $\mathfrak{b} \subseteq \mathfrak{a}$. We define the $\mathfrak{b}$-*minimum* $\mathfrak{a}$-*adjusted depth of* M, denoted by $\lambda_{\mathfrak{a}}^{\mathfrak{b}}(M)$, by

$$\begin{aligned}\lambda_{\mathfrak{a}}^{\mathfrak{b}}(M) &= \inf\{\operatorname{adj}_{\mathfrak{a}} \operatorname{depth} M_{\mathfrak{p}} : \mathfrak{p} \in \operatorname{Spec}(R) \setminus \operatorname{Var}(\mathfrak{b})\} \\ &= \inf\{\operatorname{depth} M_{\mathfrak{p}} + \operatorname{ht}(\mathfrak{a} + \mathfrak{p})/\mathfrak{p} : \mathfrak{p} \in \operatorname{Spec}(R) \setminus \operatorname{Var}(\mathfrak{b})\}.\end{aligned}$$

Thus $\lambda_{\mathfrak{a}}^{\mathfrak{b}}(M)$ is either a positive integer or ∞.

Faltings' Annihilator Theorem, the main result of this chapter, asserts that, under mild restrictions on R, the invariants $\lambda_{\mathfrak{a}}^{\mathfrak{b}}(M)$ and $f_{\mathfrak{a}}^{\mathfrak{b}}(M)$ (where M is a finitely generated R-module and $\mathfrak{b}$ is an ideal of R with $\mathfrak{b} \subseteq \mathfrak{a}$) are equal. Faltings' original proof in [10] is rather different from the one we shall present below.

The special case of Faltings' Annihilator Theorem in which $\mathfrak{b} = \mathfrak{a}$ reduces to Grothendieck's Finiteness Theorem (see [19, Exposé VIII, Corollaire 2.3]), which is another fundamental result of local cohomology. This theorem provides information about the finiteness dimension $f_{\mathfrak{a}}(M)$ of M relative to $\mathfrak{a}$ (again under mild restrictions on R).

Our approach to the proof of Faltings' Annihilator Theorem begins with an investigation of some of the properties of the invariant $\lambda_{\mathfrak{a}}^{\mathfrak{b}}(M)$ introduced in 9.2.2.

9.2.3 Remarks. Let $\mathfrak{b}$, $\mathfrak{c}$ and $\mathfrak{d}$ be further ideals of R such that $\mathfrak{c} \subseteq \mathfrak{b} \subseteq \mathfrak{a} \subseteq \mathfrak{d}$. Let M be a finitely generated R-module. Then

(i) $\lambda_{\mathfrak{a}}^{\mathfrak{b}}(M) = \lambda_{\sqrt{\mathfrak{a}}}^{\mathfrak{b}}(M) = \lambda_{\sqrt{\mathfrak{a}}}^{\sqrt{\mathfrak{b}}}(M)$;

(ii) $\lambda_{\mathfrak{a}}^{\mathfrak{b}}(M) \leq \lambda_{\mathfrak{d}}^{\mathfrak{b}}(M)$; and

(iii) $\lambda_{\mathfrak{a}}^{\mathfrak{b}}(M) \leq \lambda_{\mathfrak{a}}^{\mathfrak{c}}(M)$.

9.2.4 Lemma. *Let* $\mathfrak{b}$, $\mathfrak{c}$ *be further ideals of* R *with* $\mathfrak{b} \subseteq \mathfrak{a}$ *and* $\mathfrak{b} \subseteq \mathfrak{c}$. *Let* M *be a finitely generated* R*-module. Then*

$$\lambda_{\mathfrak{a}}^{\mathfrak{b}}(M) = \lambda_{\mathfrak{a}}^{\mathfrak{b}}(M/\Gamma_{\mathfrak{c}}(M)).$$

Proof. Let $\mathfrak{p} \in \operatorname{Spec}(R) \setminus \operatorname{Var}(\mathfrak{b})$. Then $\mathfrak{c} \not\subseteq \mathfrak{p}$, and so $(\Gamma_{\mathfrak{c}}(M))_{\mathfrak{p}} = 0$. Hence $(M/\Gamma_{\mathfrak{c}}(M))_{\mathfrak{p}} \cong M_{\mathfrak{p}}$ and

$$\operatorname{depth}(M/\Gamma_{\mathfrak{c}}(M))_{\mathfrak{p}} + \operatorname{ht}(\mathfrak{a}+\mathfrak{p})/\mathfrak{p} = \operatorname{depth} M_{\mathfrak{p}} + \operatorname{ht}(\mathfrak{a}+\mathfrak{p})/\mathfrak{p}.$$

The claim follows. □

9.2.5 Lemma. *Let* $\mathfrak{b}$ *be a second ideal of* R *with* $\mathfrak{b} \subseteq \mathfrak{a}$, *let* M *be a finitely generated* R*-module, and let* S *be a multiplicatively closed subset of* R. *Then*

$$\lambda_{\mathfrak{a}}^{\mathfrak{b}}(M) \leq \lambda_{S^{-1}\mathfrak{a}}^{S^{-1}\mathfrak{b}}(S^{-1}M).$$

Proof. Let $\mathfrak{P} \in \operatorname{Spec}(S^{-1}R) \setminus \operatorname{Var}(S^{-1}\mathfrak{b})$. Then there exists $\mathfrak{p} \in \operatorname{Spec}(R)$ such that $\mathfrak{p} \cap S = \emptyset$ and $\mathfrak{P} = S^{-1}\mathfrak{p}$. Now $\mathfrak{p} \notin \operatorname{Var}(\mathfrak{b})$, and so

$$\lambda_{\mathfrak{a}}^{\mathfrak{b}}(M) \leq \operatorname{depth} M_{\mathfrak{p}} + \operatorname{ht}(\mathfrak{a}+\mathfrak{p})/\mathfrak{p}.$$

Now $(S^{-1}M)_{\mathfrak{P}} = (S^{-1}M)_{S^{-1}\mathfrak{p}} \cong M_{\mathfrak{p}}$ as $R_{\mathfrak{p}}$-modules (when $(S^{-1}M)_{S^{-1}\mathfrak{p}}$ is regarded as an $R_{\mathfrak{p}}$-module by means of the natural isomorphism $R_{\mathfrak{p}} \xrightarrow{\cong} (S^{-1}R)_{S^{-1}\mathfrak{p}}$). Also

$$\operatorname{ht}(\mathfrak{a}+\mathfrak{p})/\mathfrak{p} \leq \operatorname{ht}(S^{-1}\mathfrak{a}+S^{-1}\mathfrak{p})/S^{-1}\mathfrak{p},$$

and so $\lambda_{\mathfrak{a}}^{\mathfrak{b}}(M) \leq \operatorname{depth}(S^{-1}M)_{\mathfrak{P}} + \operatorname{ht}(S^{-1}\mathfrak{a}+\mathfrak{P})/\mathfrak{P}$. The result follows. □

The next lemma shows that $\lambda_{\mathfrak{a}}^{\mathfrak{b}}(M)$ is, in a certain sense, independent of the base ring.

9.2.6 Lemma. *Let* $\mathfrak{b}$ *be a second ideal of* R *such that* $\mathfrak{b} \subseteq \mathfrak{a}$, *let* M *be a finitely generated* R*-module, and let* $\mathfrak{c}$ *be an ideal of* R *such that* $\mathfrak{c} \subseteq (0 : M)$. *Then*

$$\lambda_{\mathfrak{a}}^{\mathfrak{b}}(M) = \lambda_{(\mathfrak{a}+\mathfrak{c})/\mathfrak{c}}^{(\mathfrak{b}+\mathfrak{c})/\mathfrak{c}}(M).$$

Proof. Let $\mathfrak{p} \in \operatorname{Spec}(R) \setminus \operatorname{Var}(\mathfrak{b})$. Either $\mathfrak{p} \not\supseteq \mathfrak{c}$ or $\mathfrak{p} \supseteq \mathfrak{c}$. If $\mathfrak{p} \not\supseteq \mathfrak{c}$, then $M_{\mathfrak{p}} = 0$ and $\operatorname{depth} M_{\mathfrak{p}} + \operatorname{ht}(\mathfrak{a}+\mathfrak{p})/\mathfrak{p} = \infty$. This means that

$$\lambda_{\mathfrak{a}}^{\mathfrak{b}}(M) = \inf\left\{\operatorname{depth} M_{\mathfrak{p}'} + \operatorname{ht}(\mathfrak{a}+\mathfrak{p}')/\mathfrak{p}' : \mathfrak{p}' \in \operatorname{Var}(\mathfrak{c}) \setminus \operatorname{Var}(\mathfrak{b})\right\}.$$

However, if $\mathfrak{p} \in \operatorname{Var}(\mathfrak{c}) \setminus \operatorname{Var}(\mathfrak{b})$, then $\mathfrak{p}/\mathfrak{c} \in \operatorname{Spec}(R/\mathfrak{c}) \setminus \operatorname{Var}((\mathfrak{b}+\mathfrak{c})/\mathfrak{c})$, and it is an elementary exercise to check that $\operatorname{depth} M_{\mathfrak{p}/\mathfrak{c}} = \operatorname{depth} M_{\mathfrak{p}}$ and

$$\operatorname{ht}(((\mathfrak{a}+\mathfrak{c})/\mathfrak{c}) + (\mathfrak{p}/\mathfrak{c}))/(\mathfrak{p}/\mathfrak{c}) = \operatorname{ht}(\mathfrak{a}+\mathfrak{p})/\mathfrak{p}.$$

The claim follows from these observations. □

9.3 The first inequality

Our proof of Faltings' Annihilator Theorem consists of demonstrations that, with the notation of 9.1.5 and 9.2.2, we have $f_{\mathfrak{a}}^{\mathfrak{b}}(M) \leq \lambda_{\mathfrak{a}}^{\mathfrak{b}}(M)$ and, under mild restrictions on R, $\lambda_{\mathfrak{a}}^{\mathfrak{b}}(M) \leq f_{\mathfrak{a}}^{\mathfrak{b}}(M)$. We start with the first inequality. We prepare the ground with several lemmas.

9.3.1 Lemma. *Let* $\mathfrak{b}$ *be a second ideal of* R *such that* $\mathfrak{b} \subseteq \mathfrak{a}$, *and let* M *be a finitely generated* R*-module. Suppose that* $\mathfrak{p} \in \operatorname{Ass} M \setminus \operatorname{Var}(\mathfrak{b})$ *is such that* $\operatorname{ht}(\mathfrak{a}+\mathfrak{p})/\mathfrak{p} = 1$. *Then* $\mathfrak{b} \nsubseteq \sqrt{(0 : H_{\mathfrak{a}}^1(M))}$.

Proof. As $\mathfrak{p} \in \operatorname{Ass} M$, there is an exact sequence

$$0 \longrightarrow R/\mathfrak{p} \longrightarrow M \longrightarrow N \longrightarrow 0$$

of R-modules and R-homomorphisms; this induces an exact sequence

$$H_{\mathfrak{a}}^0(N) \longrightarrow H_{\mathfrak{a}}^1(R/\mathfrak{p}) \longrightarrow H_{\mathfrak{a}}^1(M).$$

Since N is finitely generated, $\mathfrak{b} \subseteq \mathfrak{a} \subseteq \sqrt{(0 : H_{\mathfrak{a}}^0(N))}$. Therefore, by 9.1.1, it is enough for us to show that $\mathfrak{b} \nsubseteq \sqrt{(0 : H_{\mathfrak{a}}^1(R/\mathfrak{p}))}$. By the Independence Theorem 4.2.1, there is an R-isomorphism $H_{\mathfrak{a}}^1(R/\mathfrak{p}) \cong H_{(\mathfrak{a}+\mathfrak{p})/\mathfrak{p}}^1(R/\mathfrak{p})$, and so it is enough for us to show that

$$(\mathfrak{b}+\mathfrak{p})/\mathfrak{p} \nsubseteq \sqrt{\left(0 : H_{(\mathfrak{a}+\mathfrak{p})/\mathfrak{p}}^1(R/\mathfrak{p})\right)}.$$

It is therefore enough for us to prove that, if R is a domain, $\operatorname{ht}\mathfrak{a} = 1$ and $0 \neq \mathfrak{b} \subseteq \mathfrak{a}$, then $\mathfrak{b} \nsubseteq \sqrt{(0 : H_{\mathfrak{a}}^1(R))}$. We shall achieve this by showing that, in these circumstances, $rH_{\mathfrak{a}}^1(R) \neq 0$ for every $r \in \mathfrak{a} \setminus \{0\}$.

Suppose that, on the contrary, $rH_{\mathfrak{a}}^1(R) = 0$ for some $r \in \mathfrak{a} \setminus \{0\}$. Let $\mathfrak{q}$ be a minimal prime of $\mathfrak{a}$ with $\operatorname{ht}\mathfrak{q} = 1$. Let $R' := R_{\mathfrak{q}}$ and $\mathfrak{m}' := \mathfrak{q}R_{\mathfrak{q}}$, so that $(R', \mathfrak{m}')$ is a 1-dimensional local domain. We deduce from 1.1.3 and 4.3.3 that

$$rH_{\mathfrak{m}'}^1(R') = rH_{\mathfrak{a}R_{\mathfrak{q}}}^1(R_{\mathfrak{q}}) \cong r(H_{\mathfrak{a}}^1(R))_{\mathfrak{q}} = 0.$$

Of course, $r \in \mathfrak{m}' \setminus \{0\}$. Since $(R', \mathfrak{m}')$ is a 1-dimensional local domain, we have $\mathfrak{m}' = \sqrt{rR'}$. Therefore, by 1.1.3 and 2.2.18(i),

$$H_{\mathfrak{m}'}^1(R') = H_{rR'}^1(R') \cong R'_r/R'.$$

Thus $rR'_r \subseteq R'$, so that $r(1/r^2) \in R'$. Hence r is a unit of R'. This contradiction completes the proof. □

9.3.2 Lemma. *Let* M *be a finitely generated* R*-module, and let* $\mathfrak{p}, \mathfrak{s} \in \operatorname{Spec}(R)$ *with* $\mathfrak{p} \subseteq \mathfrak{s}$. *Then*

$$\operatorname{depth} M_{\mathfrak{s}} \leq \operatorname{depth} M_{\mathfrak{p}} + \operatorname{ht}\mathfrak{s}/\mathfrak{p}.$$

Proof. We use induction on $h := \operatorname{ht} \mathfrak{s}/\mathfrak{p}$, there being nothing to prove when $h = 0$.

Consider the case in which $h = 1$. Clearly, we can assume that $\mathfrak{p} \in \operatorname{Supp}(M)$. Now $M_{\mathfrak{p}}$ is $R_{\mathfrak{p}}$-isomorphic to the localization of $M_{\mathfrak{s}}$ at the prime ideal $\mathfrak{p}R_{\mathfrak{s}}$ (when that localization is regarded as an $R_{\mathfrak{p}}$-module by means of the natural isomorphism $R_{\mathfrak{p}} \xrightarrow{\cong} (R_{\mathfrak{s}})_{\mathfrak{p}R_{\mathfrak{s}}}$). In order to establish the desired result when $h = 1$, it is therefore enough for us to show that, if $(R, \mathfrak{m})$ is local, M is a finitely generated R-module, and $\mathfrak{p} \in \operatorname{Supp}(M)$ is such that $\dim R/\mathfrak{p} = 1$, then $\operatorname{depth} M \leq \operatorname{depth} M_{\mathfrak{p}} + 1$. This we do.

Let $\operatorname{grade}_M \mathfrak{p} = t$ (see 6.2.4), and let $a_1, \ldots, a_t$ be a maximal M-sequence contained in $\mathfrak{p}$. Then $a_1/1, \ldots, a_t/1$ is an $M_{\mathfrak{p}}$-sequence contained in $\mathfrak{p}R_{\mathfrak{p}}$. Let $N := M/\sum_{j=1}^{t} a_j M$. Then

$$\operatorname{depth} N = \operatorname{depth} M - t, \qquad \operatorname{depth} N_{\mathfrak{p}} = \operatorname{depth} M_{\mathfrak{p}} - t, \qquad \operatorname{grade}_N \mathfrak{p} = 0.$$

Thus we can achieve our aim by showing that $\operatorname{depth} N \leq \operatorname{depth} N_{\mathfrak{p}} + 1$. We can assume that $\operatorname{depth} N > 0$, since otherwise there is nothing to prove. This assumption means that $\mathfrak{m} \notin \operatorname{Ass} N$. But $\mathfrak{p}$ consists entirely of zerodivisors on N, and so $\mathfrak{p} \subseteq \bigcup_{\mathfrak{p}' \in \operatorname{Ass}(N)} \mathfrak{p}'$. It therefore follows from the Prime Avoidance Theorem and the fact that $\dim R/\mathfrak{p} = 1$ that $\mathfrak{p} \in \operatorname{Ass} N$, and so $\operatorname{depth} N \leq \dim R/\mathfrak{p} = 1$ by [35, Theorem 17.2].

The claim in the lemma has therefore been proved when $h = 1$; suppose now that $h > 1$ and the claim has been proved for smaller values of h. Since $\operatorname{ht} \mathfrak{s}/\mathfrak{p} = h$, there exists $\mathfrak{q} \in \operatorname{Spec}(R)$ such that $\mathfrak{p} \subset \mathfrak{q} \subset \mathfrak{s}$, $\operatorname{ht} \mathfrak{q}/\mathfrak{p} = 1$ and $\operatorname{ht} \mathfrak{s}/\mathfrak{q} = h - 1$. We can now use the inductive hypothesis and the (already established) truth of the claim in the case when $h = 1$ to see that

$$\operatorname{depth} M_{\mathfrak{s}} \leq \operatorname{depth} M_{\mathfrak{q}} + h - 1 \leq \operatorname{depth} M_{\mathfrak{p}} + 1 + h - 1 = \operatorname{depth} M_{\mathfrak{p}} + h. \ \square$$

9.3.3 Lemma. *Let M be a finitely generated R-module. Suppose the prime ideals $\mathfrak{p} \in \operatorname{Spec}(R) \setminus \operatorname{Var}(\mathfrak{a})$, $\mathfrak{q} \in \operatorname{Spec}(R)$ are such that $\mathfrak{q}$ is a minimal prime of $\mathfrak{a} + \mathfrak{p}$ and $\operatorname{ht} \mathfrak{q}/\mathfrak{p} = \operatorname{ht}(\mathfrak{a} + \mathfrak{p})/\mathfrak{p}$. Then*

$$\operatorname{adj}_{\mathfrak{a}} \operatorname{depth} M_{\mathfrak{s}} \leq \operatorname{adj}_{\mathfrak{a}} \operatorname{depth} M_{\mathfrak{p}} \text{ for all } \mathfrak{s} \in \operatorname{Spec}(R) \setminus \operatorname{Var}(\mathfrak{a}) \text{ with } \mathfrak{p} \subseteq \mathfrak{s} \subseteq \mathfrak{q}.$$

Proof. It is clear that $\mathfrak{q} \supseteq \mathfrak{a} + \mathfrak{s}$, and so $\operatorname{ht} \mathfrak{q}/\mathfrak{s} \geq \operatorname{ht}(\mathfrak{a} + \mathfrak{s})/\mathfrak{s}$. Hence, on use of 9.3.2, we have

$$\begin{aligned}
\operatorname{adj}_{\mathfrak{a}} \operatorname{depth} M_{\mathfrak{s}} &= \operatorname{depth} M_{\mathfrak{s}} + \operatorname{ht}(\mathfrak{a} + \mathfrak{s})/\mathfrak{s} \\
&\leq \operatorname{depth} M_{\mathfrak{s}} + \operatorname{ht} \mathfrak{q}/\mathfrak{s} \\
&\leq \operatorname{depth} M_{\mathfrak{p}} + \operatorname{ht} \mathfrak{s}/\mathfrak{p} + \operatorname{ht} \mathfrak{q}/\mathfrak{s} \\
&\leq \operatorname{depth} M_{\mathfrak{p}} + \operatorname{ht} \mathfrak{q}/\mathfrak{p} \\
&= \operatorname{depth} M_{\mathfrak{p}} + \operatorname{ht}(\mathfrak{a} + \mathfrak{p})/\mathfrak{p} = \operatorname{adj}_{\mathfrak{a}} \operatorname{depth} M_{\mathfrak{p}}. \ \square
\end{aligned}$$

9.3.4 Lemma. *Let* $\mathfrak{s}, \mathfrak{q} \in \operatorname{Spec}(R)$ *with* $\mathfrak{s} \subset \mathfrak{q}$ *be such that* $\operatorname{ht} \mathfrak{q}/\mathfrak{s} > 1$. *Let* $a \in \mathfrak{q} \setminus \mathfrak{s}$. *Then there exists* $\mathfrak{t} \in \operatorname{Spec}(R)$ *with* $\mathfrak{s} \subset \mathfrak{t} \subset \mathfrak{q}$ *such that* $a \notin \mathfrak{t}$.

Proof. Let $\overline{R} := R/\mathfrak{s}$, and, for $c \in R$, denote the natural image of c in $\overline{R}$ by $\overline{c}$.

Let the minimal primes of the proper principal ideal $\overline{R}\overline{a}$ be $\mathfrak{p}_1/\mathfrak{s}, \ldots, \mathfrak{p}_h/\mathfrak{s}$, where $\mathfrak{p}_1, \ldots, \mathfrak{p}_h \in \operatorname{Spec}(R)$. Now $\operatorname{ht} \mathfrak{p}_i/\mathfrak{s} = 1$ for all $i = 1, \ldots, h$, by Krull's Principal Ideal Theorem. Therefore, since $\operatorname{ht} \mathfrak{q}/\mathfrak{s} > 1$, it follows from the Prime Avoidance Theorem that $\mathfrak{q}/\mathfrak{s} \nsubseteq \bigcup_{i=1}^{h} \mathfrak{p}_i/\mathfrak{s}$. Hence, there exists $b \in R$ such that

$$\overline{b} \in \mathfrak{q}/\mathfrak{s} \setminus \bigcup_{i=1}^{h} \mathfrak{p}_i/\mathfrak{s}.$$

Since $\overline{R}\overline{b} \subseteq \mathfrak{q}/\mathfrak{s}$, there exists $\mathfrak{t} \in \operatorname{Spec}(R)$ with $\mathfrak{s} \subset \mathfrak{t} \subseteq \mathfrak{q}$ such that $\mathfrak{t}/\mathfrak{s}$ is a minimal prime of $\overline{R}\overline{b}$. Since $\operatorname{ht} \mathfrak{q}/\mathfrak{s} > 1$ and $\operatorname{ht} \mathfrak{t}/\mathfrak{s} = 1$, it follows that $\mathfrak{t} \subset \mathfrak{q}$. Since $b \in \mathfrak{t} \setminus \bigcup_{i=1}^{h} \mathfrak{p}_i$, we can deduce that $\mathfrak{t}$ is different from all of $\mathfrak{p}_1, \ldots, \mathfrak{p}_h$. Hence $a \notin \mathfrak{t}$. □

9.3.5 Theorem. *Let* $\mathfrak{b}$ *be a second ideal of* R *such that* $\mathfrak{b} \subseteq \mathfrak{a}$, *and let* M *be a finitely generated* R*-module. Then*

$$f_{\mathfrak{a}}^{\mathfrak{b}}(M) \leq \lambda_{\mathfrak{a}}^{\mathfrak{b}}(M).$$

Proof. Set $\lambda := \lambda_{\mathfrak{a}}^{\mathfrak{b}}(M)$. If $\lambda = \infty$, then there is nothing to prove; we therefore suppose that λ is finite, and argue by induction on λ.

When $\lambda = 1$, there exists $\mathfrak{p} \in \operatorname{Spec}(R) \setminus \operatorname{Var}(\mathfrak{b})$ with

$$\operatorname{adj}_{\mathfrak{a}} \operatorname{depth} M_{\mathfrak{p}} = \operatorname{depth} M_{\mathfrak{p}} + \operatorname{ht}(\mathfrak{a} + \mathfrak{p})/\mathfrak{p} = 1.$$

These conditions mean that $\operatorname{ht}(\mathfrak{a} + \mathfrak{p})/\mathfrak{p} = 1$ and $\operatorname{depth} M_{\mathfrak{p}} = 0$. Hence $\mathfrak{p} \in \operatorname{Ass} M$, and so it follows from Lemma 9.3.1 that $\mathfrak{b} \nsubseteq \sqrt{(0 : H_{\mathfrak{a}}^1(M))}$. Hence $f_{\mathfrak{a}}^{\mathfrak{b}}(M) = 1 = \lambda$.

Now assume, inductively, that $\lambda > 1$ and that the desired inequality has been proved for smaller values of λ. Now $\lambda_{\mathfrak{a}}^{\mathfrak{b}}(M) = \lambda_{\mathfrak{a}}^{\mathfrak{b}}(M/\Gamma_{\mathfrak{a}}(M))$ by 9.2.4, and it is immediate from 2.1.7(iii) that $f_{\mathfrak{a}}^{\mathfrak{b}}(M) = f_{\mathfrak{a}}^{\mathfrak{b}}(M/\Gamma_{\mathfrak{a}}(M))$. Since $M/\Gamma_{\mathfrak{a}}(M)$ is an $\mathfrak{a}$-torsion-free R-module, by 2.1.2, we can assume henceforth in this proof that M is $\mathfrak{a}$-torsion-free.

Choose $\mathfrak{p} \in \operatorname{Spec}(R) \setminus \operatorname{Var}(\mathfrak{b})$ with

$$\operatorname{adj}_{\mathfrak{a}} \operatorname{depth} M_{\mathfrak{p}} = \operatorname{depth} M_{\mathfrak{p}} + \operatorname{ht}(\mathfrak{a} + \mathfrak{p})/\mathfrak{p} = \lambda.$$

Choose $a \in \mathfrak{b} \setminus \mathfrak{p}$. Let $\mathfrak{q}$ be a minimal prime of $\mathfrak{a} + \mathfrak{p}$ such that $\operatorname{ht} \mathfrak{q}/\mathfrak{p} = \operatorname{ht}(\mathfrak{a} + \mathfrak{p})/\mathfrak{p}$. Then $\mathfrak{p}$ belongs to the set

$$\Sigma := \{\mathfrak{s}' \in \operatorname{Spec}(R) : \mathfrak{p} \subseteq \mathfrak{s}' \subseteq \mathfrak{q} \text{ and } a \notin \mathfrak{s}'\};$$

let $\mathfrak{s}$ be a maximal member of Σ. Now $a \in \mathfrak{b} \subseteq \mathfrak{a} \subseteq \mathfrak{q}$, and so $\mathfrak{s} \subset \mathfrak{q}$. Lemma 9.3.4 shows that $\operatorname{ht} \mathfrak{q}/\mathfrak{s} = 1$. Note that the fact that $a \notin \mathfrak{s}$ ensures that $\mathfrak{s} \in \operatorname{Spec}(R) \setminus \operatorname{Var}(\mathfrak{b})$.

We can now deduce from 9.3.3 and the definition of λ that

$$\lambda \leq \operatorname{adj}_{\mathfrak{a}} \operatorname{depth} M_{\mathfrak{s}} \leq \operatorname{adj}_{\mathfrak{a}} \operatorname{depth} M_{\mathfrak{p}} = \lambda.$$

Therefore $\operatorname{adj}_{\mathfrak{a}} \operatorname{depth} M_{\mathfrak{s}} = \lambda$. Note that $\mathfrak{q}$ is a minimal prime of $\mathfrak{a} + \mathfrak{s}$ such that $\operatorname{ht} \mathfrak{q}/\mathfrak{s} = \operatorname{ht}(\mathfrak{a} + \mathfrak{s})/\mathfrak{s} = 1$. Thus we can replace $\mathfrak{p}$ by $\mathfrak{s}$ and so make the additional assumption that $\operatorname{ht} \mathfrak{q}/\mathfrak{p} = \operatorname{ht}(\mathfrak{a} + \mathfrak{p})/\mathfrak{p} = 1$.

We now propose to localize at $\mathfrak{q}$. Note that $\mathfrak{p}R_{\mathfrak{q}} \in \operatorname{Spec}(R_{\mathfrak{q}}) \setminus \operatorname{Var}(\mathfrak{b}R_{\mathfrak{q}})$, that $\mathfrak{q}R_{\mathfrak{q}}$ is a minimal prime of $\mathfrak{a}R_{\mathfrak{q}} + \mathfrak{p}R_{\mathfrak{q}}$, that

$$\operatorname{ht} \mathfrak{q}R_{\mathfrak{q}}/\mathfrak{p}R_{\mathfrak{q}} = \operatorname{ht}(\mathfrak{a}R_{\mathfrak{q}} + \mathfrak{p}R_{\mathfrak{q}})/\mathfrak{p}R_{\mathfrak{q}} = 1,$$

that $M_{\mathfrak{q}}$ is a finitely generated $\mathfrak{a}R_{\mathfrak{q}}$-torsion-free $R_{\mathfrak{q}}$-module, and that

$$\begin{aligned} \operatorname{adj}_{\mathfrak{a}R_{\mathfrak{q}}} \operatorname{depth}(M_{\mathfrak{q}})_{\mathfrak{p}R_{\mathfrak{q}}} &= \operatorname{depth}(M_{\mathfrak{q}})_{\mathfrak{p}R_{\mathfrak{q}}} + \operatorname{ht}(\mathfrak{a}R_{\mathfrak{q}} + \mathfrak{p}R_{\mathfrak{q}})/\mathfrak{p}R_{\mathfrak{q}} \\ &= \operatorname{depth} M_{\mathfrak{p}} + 1 = \lambda. \end{aligned}$$

We can therefore deduce from 9.2.5 that $\lambda_{\mathfrak{a}R_{\mathfrak{q}}}^{\mathfrak{b}R_{\mathfrak{q}}}(M_{\mathfrak{q}}) = \lambda$. Also, by 9.1.6, we have $f_{\mathfrak{a}}^{\mathfrak{b}}(M) \leq f_{\mathfrak{a}R_{\mathfrak{q}}}^{\mathfrak{b}R_{\mathfrak{q}}}(M_{\mathfrak{q}})$. These considerations mean that it is enough for us to prove the desired result under the additional assumption that $(R, \mathfrak{q})$ is local, and we make this assumption in what follows.

Our next aim is to show that $\mathfrak{p}$ contains a non-zerodivisor on M. Suppose that this is not the case, so that $\mathfrak{p} \subseteq \mathfrak{s}$ for some $\mathfrak{s} \in \operatorname{Ass} M$. Since M is $\mathfrak{a}$-torsion-free, $\mathfrak{a}$ contains a non-zerodivisor on M, by 2.1.1(ii), so that, as $\mathfrak{q} \supseteq \mathfrak{a}$, we see that $\mathfrak{s} \subset \mathfrak{q}$. As $\operatorname{ht} \mathfrak{q}/\mathfrak{p} = 1$, it follows that $\mathfrak{p} = \mathfrak{s} \in \operatorname{Ass} M$. This means that $\operatorname{depth} M_{\mathfrak{p}} = 0$, and $\lambda = \operatorname{depth} M_{\mathfrak{p}} + \operatorname{ht}(\mathfrak{a} + \mathfrak{p})/\mathfrak{p} = 1$. This contradiction shows that there exists $r \in \mathfrak{p}$ which is a non-zerodivisor on M.

Now

$$\begin{aligned} \lambda_{\mathfrak{a}}^{\mathfrak{b}}(M/rM) &\leq \operatorname{adj}_{\mathfrak{a}} \operatorname{depth}(M/rM)_{\mathfrak{p}} = \operatorname{depth}(M/rM)_{\mathfrak{p}} + 1 \\ &= \operatorname{depth} M_{\mathfrak{p}} - 1 + 1 < \lambda. \end{aligned}$$

Therefore, by the induction hypothesis, $f_{\mathfrak{a}}^{\mathfrak{b}}(M/rM) \leq \lambda_{\mathfrak{a}}^{\mathfrak{b}}(M/rM) < \lambda$. Set $u := f_{\mathfrak{a}}^{\mathfrak{b}}(M/rM)$, so that $\mathfrak{b} \nsubseteq \sqrt{(0 : H_{\mathfrak{a}}^{u}(M/rM))}$. But the exact sequence

$$0 \longrightarrow M \xrightarrow{r} M \longrightarrow M/rM \longrightarrow 0$$

induces an exact sequence

$$H_{\mathfrak{a}}^{u}(M) \longrightarrow H_{\mathfrak{a}}^{u}(M/rM) \longrightarrow H_{\mathfrak{a}}^{u+1}(M),$$

and so it follows from 9.1.1 that $\mathfrak{b} \not\subseteq \sqrt{(0 : H^i_{\mathfrak{a}}(M))}$ for $i = u$ or $i = u + 1$. Thus

$$f^{\mathfrak{b}}_{\mathfrak{a}}(M) \leq u + 1 = f^{\mathfrak{b}}_{\mathfrak{a}}(M/rM) + 1 \leq \lambda.$$

This completes the proof. □

9.4 The second inequality

We now embark on the more difficult part of our proof of Faltings' Annihilator Theorem, namely the proof that, when R is a homomorphic image of a regular ring, then, with the notation of 9.1.5 and 9.2.2, we have $\lambda^{\mathfrak{b}}_{\mathfrak{a}}(M) \leq f^{\mathfrak{b}}_{\mathfrak{a}}(M)$. (Recall (see [35, p. 157]) that a commutative Noetherian ring is said to be *regular* precisely when its localizations at all of its prime ideals are regular local rings.)

9.4.1 Lemma. *Let M be a finitely generated R-module, and let the prime ideal $\mathfrak{p} \in \operatorname{Spec}(R) \setminus \operatorname{Supp}(M)$. Then there exists $s \in R \setminus \mathfrak{p}$ such that, for every ideal $\mathfrak{b}$ of R, we have*

$$sH^i_{\mathfrak{b}}(M) = 0 \qquad \textit{for all } i \in \mathbb{N}_0.$$

Proof. Since M is finitely generated, there exists $s \in (0 : M) \setminus \mathfrak{p}$, and this s has the desired properties because the functors $H^i_{\mathfrak{b}}$ ($i \in \mathbb{N}_0$) are R-linear. □

9.4.2 Lemma. *Let M be a finitely generated R-module, and let $\mathfrak{p} \in \operatorname{Spec}(R)$ be such that $M_{\mathfrak{p}}$ is a non-zero free $R_{\mathfrak{p}}$-module. Then there exist $t \in \mathbb{N}$ and an R-homomorphism $\pi : R^t \longrightarrow M$ such that $(\operatorname{Ker}\pi)_{\mathfrak{p}} = (\operatorname{Coker}\pi)_{\mathfrak{p}} = 0$.*

Proof. Set $t := \operatorname{rank}_{R_{\mathfrak{p}}} M_{\mathfrak{p}}$. There exist $m_1, \ldots, m_t \in M$ such that $(m_i/1)_{i=1}^t$ is a base for the free $R_{\mathfrak{p}}$-module $M_{\mathfrak{p}}$. Let $\pi : R^t \longrightarrow M$ be the R-homomorphism for which $\pi((r_1, \ldots, r_t)) = \sum_{i=1}^t r_i m_i$ for all $(r_1, \ldots, r_t) \in R^t$. Then the localization of π at $\mathfrak{p}$ is an isomorphism, and so $(\operatorname{Ker}\pi)_{\mathfrak{p}} = (\operatorname{Coker}\pi)_{\mathfrak{p}} = 0$. □

9.4.3 Lemma. *Let M be a finitely generated R-module, and let $\mathfrak{p} \in \operatorname{Spec}(R)$ be such that $M_{\mathfrak{p}}$ is a non-zero free $R_{\mathfrak{p}}$-module. Then there exists $s \in R \setminus \mathfrak{p}$ such that, for every proper ideal $\mathfrak{b}$ of R, we have*

$$sH^i_{\mathfrak{b}}(M) = 0 \qquad \textit{for all } i < \operatorname{grade}\mathfrak{b}.$$

Proof. By 9.4.2, there exist $t \in \mathbb{N}$ and an R-homomorphism $\pi : R^t \longrightarrow M$ such that $(\operatorname{Ker}\pi)_{\mathfrak{p}} = (\operatorname{Coker}\pi)_{\mathfrak{p}} = 0$. By 9.4.1, there exist $u, v \in R \setminus \mathfrak{p}$ such that, for every ideal $\mathfrak{b}$ of R, we have

$$uH^i_{\mathfrak{b}}(\operatorname{Ker}\pi) = vH^i_{\mathfrak{b}}(\operatorname{Coker}\pi) = 0 \qquad \text{for all } i \in \mathbb{N}_0.$$

Set $s := uv$. Let $\mathfrak{b}$ be a proper ideal of R and let $i \in \mathbb{N}_0$ with $i < \operatorname{grade}\mathfrak{b}$.

Now the exact sequence $0 \longrightarrow \operatorname{Ker}\pi \longrightarrow R^t \longrightarrow \operatorname{Im}\pi \longrightarrow 0$ induces an exact sequence $H^i_{\mathfrak{b}}(R^t) \longrightarrow H^i_{\mathfrak{b}}(\operatorname{Im}\pi) \longrightarrow H^{i+1}_{\mathfrak{b}}(\operatorname{Ker}\pi)$. Since $i < \operatorname{grade}\mathfrak{b}$ we have $H^i_{\mathfrak{b}}(R) = 0$, by 6.2.7, so that $H^i_{\mathfrak{b}}(R^t) = 0$ in view of the additivity of the functor $H^i_{\mathfrak{b}}$. By the immediately preceding paragraph, $uH^{i+1}_{\mathfrak{b}}(\operatorname{Ker}\pi) = 0$. Therefore $uH^i_{\mathfrak{b}}(\operatorname{Im}\pi) = 0$.

Next, the exact sequence $0 \longrightarrow \operatorname{Im}\pi \longrightarrow M \longrightarrow \operatorname{Coker}\pi \longrightarrow 0$ induces an exact sequence $H^i_{\mathfrak{b}}(\operatorname{Im}\pi) \longrightarrow H^i_{\mathfrak{b}}(M) \longrightarrow H^i_{\mathfrak{b}}(\operatorname{Coker}\pi)$. As $uH^i_{\mathfrak{b}}(\operatorname{Im}\pi) = 0$ and $vH^i_{\mathfrak{b}}(\operatorname{Coker}\pi) = 0$, it follows that $sH^i_{\mathfrak{b}}(M) = uvH^i_{\mathfrak{b}}(M) = 0$. □

9.4.4 Conventions. We shall denote the projective dimension of an R-module M by $\operatorname{proj\,dim} M$ or, occasionally, by $\operatorname{proj\,dim}_R M$ if it is essential to specify the underlying ring concerned. In particular, the reader is warned that, when S is a multiplicatively closed subset of R, we shall always write $\operatorname{proj\,dim} S^{-1}M$ rather than $\operatorname{proj\,dim}_{S^{-1}R} S^{-1}M$. We adopt the convention that a zero module has projective dimension $-\infty$.

9.4.5 Lemma. *Let M be a finitely generated R-module, and let $\mathfrak{p} \in \operatorname{Spec}(R)$ be such that $\operatorname{proj\,dim} M_{\mathfrak{p}} < \infty$. Then there exists $s \in R \setminus \mathfrak{p}$ such that, for every proper ideal $\mathfrak{b}$ of R, we have*

$$sH^i_{\mathfrak{b}}(M) = 0 \qquad \textit{for all } i < \operatorname{grade}\mathfrak{b} - \operatorname{proj\,dim} M_{\mathfrak{p}}.$$

Note. In the case when $M_{\mathfrak{p}} = 0$, one should interpret the '$-\,-\infty$' in the above statement as '∞'.

Proof. Set $h := \operatorname{proj\,dim} M_{\mathfrak{p}}$. We use induction on h. If $h = -\infty$, then $M_{\mathfrak{p}} = 0$ and the result is clear from Lemma 9.4.1. When $h = 0$, the desired result follows from Lemma 9.4.3, since then $M_{\mathfrak{p}}$ is a non-zero free $R_{\mathfrak{p}}$-module.

We therefore assume, inductively, that $h > 0$ and the result has been proved for smaller values of h. There is a non-zero, finitely generated free R-module F and an exact sequence $0 \longrightarrow N \longrightarrow F \longrightarrow M \longrightarrow 0$ of R-modules and homomorphisms. Localization yields an exact sequence

$$0 \longrightarrow N_{\mathfrak{p}} \longrightarrow F_{\mathfrak{p}} \longrightarrow M_{\mathfrak{p}} \longrightarrow 0.$$

Therefore $\operatorname{proj\,dim} N_{\mathfrak{p}} = h-1$ (since $h > 0$), and so, by the inductive hypothesis, there exists $s \in R \setminus \mathfrak{p}$ such that, for every proper ideal $\mathfrak{b}$ of R, we have

$$sH^i_{\mathfrak{b}}(N) = 0 \qquad \text{for all } i < \operatorname{grade}\mathfrak{b} - h + 1.$$

Thus $sH^{i+1}_{\mathfrak{b}}(N) = 0$ for all $i < \operatorname{grade}\mathfrak{b} - h$. Let $\mathfrak{b}$ be a proper ideal of R and let $i \in \mathbb{N}_0$ with $i < \operatorname{grade}\mathfrak{b} - h$.

The exact sequence $0 \longrightarrow N \longrightarrow F \longrightarrow M \longrightarrow 0$ induces a further exact sequence $H^i_{\mathfrak{b}}(F) \longrightarrow H^i_{\mathfrak{b}}(M) \longrightarrow H^{i+1}_{\mathfrak{b}}(N)$. Since $i < \operatorname{grade} \mathfrak{b}$ we have $H^i_{\mathfrak{b}}(F) = 0$, by 6.2.7 and the additivity of the functor $H^i_{\mathfrak{b}}$. By the immediately preceding paragraph, $sH^{i+1}_{\mathfrak{b}}(N) = 0$. Therefore $sH^i_{\mathfrak{b}}(M) = 0$. This completes the inductive step. □

9.4.6 Lemma. *Let M be a finitely generated R-module, and let $\mathfrak{p} \in \operatorname{Spec}(R)$ be such that* $\operatorname{proj\,dim} M_{\mathfrak{p}} < \infty$. *Then there exists $s \in R \setminus \mathfrak{p}$ such that* $\operatorname{proj\,dim} M_s = \operatorname{proj\,dim} M_{\mathfrak{p}}$.

Proof. Set $h := \operatorname{proj\,dim} M_{\mathfrak{p}}$. We use induction on h. If $h = -\infty$, then $M_{\mathfrak{p}} = 0$ and there exists $s \in R \setminus \mathfrak{p}$ such that $sM = 0$. Hence $M_s = 0$ and $\operatorname{proj\,dim} M_s = -\infty = h$.

When $h = 0$, there exists, by Lemma 9.4.2, a $t \in \mathbb{N}$ and an R-homomorphism $\pi : R^t \longrightarrow M$ such that $(\operatorname{Ker} \pi)_{\mathfrak{p}} = (\operatorname{Coker} \pi)_{\mathfrak{p}} = 0$. Then there exists $s \in R \setminus \mathfrak{p}$ such that $s \operatorname{Ker} \pi = s \operatorname{Coker} \pi = 0$. It follows that $(\operatorname{Ker} \pi)_s = (\operatorname{Coker} \pi)_s = 0$ and $\pi_s : (R^t)_s \longrightarrow M_s$ is an isomorphism. Since $M_s \neq 0$, we have $\operatorname{proj\,dim} M_s = 0 = h$.

We therefore assume, inductively, that $h > 0$ and the result has been proved for smaller values of h. There is a non-zero, finitely generated free R-module F and an exact sequence $0 \longrightarrow N \longrightarrow F \longrightarrow M \longrightarrow 0$ of R-modules and homomorphisms. Localization yields an exact sequence

$$0 \longrightarrow N_{\mathfrak{p}} \longrightarrow F_{\mathfrak{p}} \longrightarrow M_{\mathfrak{p}} \longrightarrow 0.$$

Note that $\operatorname{proj\,dim} N_{\mathfrak{p}} = h - 1$, and so, by the inductive hypothesis, there exists $s \in R \setminus \mathfrak{p}$ such that $\operatorname{proj\,dim} N_s = \operatorname{proj\,dim} N_{\mathfrak{p}} = h - 1$. But then the exact sequence

$$0 \longrightarrow N_s \longrightarrow F_s \longrightarrow M_s \longrightarrow 0$$

shows that $\operatorname{proj\,dim} M_s \leq h$. Since $\mathfrak{p} \cap \{s^n : n \in \mathbb{N}_0\} = \emptyset$, we see that $M_{\mathfrak{p}} \cong (M_s)_{\mathfrak{p}R_s}$ (when the latter is regarded as an $R_{\mathfrak{p}}$-module by means of the natural isomorphism $R_{\mathfrak{p}} \xrightarrow{\cong} (R_s)_{\mathfrak{p}R_s}$). Hence $h = \operatorname{proj\,dim} M_{\mathfrak{p}} \leq \operatorname{proj\,dim} M_s \leq h$, so that $\operatorname{proj\,dim} M_s = \operatorname{proj\,dim} M_{\mathfrak{p}}$. This completes the inductive step. □

9.4.7 Corollary. *Let M be a finitely generated R-module. Then for each $t \in \mathbb{N}_0 \cup \{-\infty\}$, the set*

$$U_t(M) := \{\mathfrak{p} \in \operatorname{Spec}(R) : \operatorname{proj\,dim} M_{\mathfrak{p}} \leq t\}$$

is an open subset of $\operatorname{Spec}(R)$ *(in the Zariski topology).*

Proof. Let $\mathfrak{p} \in U_t(M)$, so that $h := \operatorname{proj\,dim} M_{\mathfrak{p}} \leq t$. By 9.4.6, there exists $s \in R \setminus \mathfrak{p}$ such that $\operatorname{proj\,dim} M_s = h$. Therefore, for each $\mathfrak{q}$ in the open neighbourhood $\operatorname{Spec}(R) \setminus \operatorname{Var}(sR)$ of $\mathfrak{p}$, we have $\operatorname{proj\,dim} M_{\mathfrak{q}} \leq \operatorname{proj\,dim} M_s \leq t$ (because $M_{\mathfrak{q}} \cong (M_s)_{\mathfrak{q}R_s}$ when the latter is regarded as an $R_{\mathfrak{q}}$-module by means of the natural isomorphism $R_{\mathfrak{q}} \xrightarrow{\cong} (R_s)_{\mathfrak{q}R_s}$), so that $\mathfrak{q} \in U_t(M)$. □

9.4.8 Notation and Remarks. Let M be a finitely generated R-module. For each $t \in \mathbb{N}_0 \cup \{-\infty\}$, let

$$U_t(M) := \{\mathfrak{p} \in \operatorname{Spec}(R) : \operatorname{proj\,dim} M_{\mathfrak{p}} \leq t\},$$

let $C_t(M) = \operatorname{Spec}(R) \setminus U_t(M)$, and let $\mathfrak{c}_t(M) = \bigcap_{\mathfrak{p} \in C_t(M)} \mathfrak{p}$. Then

(i) $U_t(M)$ is (by 9.4.7) an open and so $C_t(M)$ is a closed subset of $\operatorname{Spec}(R)$, for all $t \in \mathbb{N}_0$;

(ii) $\operatorname{Spec}(R) \setminus \operatorname{Supp}(M) = U_{-\infty}(M)$ and

$$U_{-\infty}(M) \subseteq U_0(M) \subseteq U_1(M) \subseteq \ldots \subseteq U_t(M) \subseteq \ldots;$$

(iii) $\operatorname{Supp}(M) = C_{-\infty}(M) \supseteq C_0(M) \supseteq C_1(M) \supseteq \ldots \supseteq C_t(M) \supseteq \ldots$;

(iv) $\sqrt{(0 : M)} = \mathfrak{c}_{-\infty}(M) \subseteq \mathfrak{c}_0(M) \subseteq \mathfrak{c}_1(M) \subseteq \ldots \subseteq \mathfrak{c}_t(M) \subseteq \ldots$;

(v) for each $t \in \mathbb{N}_0 \cup \{-\infty\}$, the ideal $\mathfrak{c}_t(M)$ is radical (that is, is equal to its own radical), and $\operatorname{Var}(\mathfrak{c}_t(M)) = C_t(M)$; and

(vi) if R is regular, so that, for all $\mathfrak{p} \in \operatorname{Spec}(R)$, the localization $R_{\mathfrak{p}}$ has finite global dimension and $\operatorname{proj\,dim} M_{\mathfrak{p}}$ is finite, then

$$\bigcup_{t \in \mathbb{N}_0 \cup \{-\infty\}} U_t(M) = \operatorname{Spec}(R) \quad \text{and} \quad \bigcap_{t \in \mathbb{N}_0 \cup \{-\infty\}} C_t(M) = \emptyset.$$

9.4.9 ♯Exercise. Let M be a finitely generated R-module and let S be a multiplicatively closed subset of R. Show that, with the notation of 9.4.8,

$$\mathfrak{c}_t(S^{-1}M) = S^{-1}(\mathfrak{c}_t(M)) \qquad \text{for all } t \in \mathbb{N}_0 \cup \{-\infty\}.$$

9.4.10 Proposition. *Let M be a finitely generated R-module; let $t \in \mathbb{N}_0 \cup \{-\infty\}$. We use the notation of* 9.4.8. *There exists $n \in \mathbb{N}$ such that, for every proper ideal $\mathfrak{b}$ of R, we have*

$$\mathfrak{c}_t(M)^n H^i_{\mathfrak{b}}(M) = 0 \qquad \textit{for all } i < \operatorname{grade} \mathfrak{b} - t.$$

Note. In the case when $t = -\infty$, one should interpret the '$--\infty$' in the above statement as '∞'.

Proof. Let $\mathfrak{p} \in U_t(M)$, so that $\operatorname{proj\,dim} M_{\mathfrak{p}} \leq t$. By 9.4.5, there exists $s_{\mathfrak{p}} \in R \setminus \mathfrak{p}$ such that, for every proper ideal $\mathfrak{b}$ of R, we have $s_{\mathfrak{p}} H^i_{\mathfrak{b}}(M) = 0$ for all $i < \operatorname{grade} \mathfrak{b} - \operatorname{proj\,dim} M_{\mathfrak{p}}$, and therefore for all $i < \operatorname{grade} \mathfrak{b} - t$.

Set $\mathfrak{g} := \sum_{\mathfrak{p}' \in U_t(M)} s_{\mathfrak{p}'} R$, and observe that, for every proper ideal $\mathfrak{d}$ of R, we have $\mathfrak{g} H^i_{\mathfrak{d}}(M) = 0$ for all $i < \operatorname{grade} \mathfrak{d} - t$. Note that no prime ideal in $U_t(M)$ contains $\mathfrak{g}$. The latter statement implies that $\operatorname{Var}(\mathfrak{g}) \subseteq C_t(M)$, so that $\mathfrak{c}_t(M) \subseteq \sqrt{\mathfrak{g}}$. Hence there exists $n \in \mathbb{N}$ such that $\mathfrak{c}_t(M)^n \subseteq \mathfrak{g}$, and the result follows from this. □

9.4.11 Exercise. Assume that R is a homomorphic image of a regular (commutative Noetherian) ring, and let M be a finitely generated R-module with the property that $\operatorname{Supp}(M)$ has exactly one minimal member. Assume that $\mathfrak{c}$ is an ideal of R such that $M_{\mathfrak{p}}$ is a Cohen-Macaulay $R_{\mathfrak{p}}$-module for all $\mathfrak{p} \in \operatorname{Spec}(R) \setminus \operatorname{Var}(\mathfrak{c})$. Prove that there exists $n \in \mathbb{N}$ such that

$$\mathfrak{c}^n H^i_{\mathfrak{q}}(M) = 0 \qquad \text{for all } \mathfrak{q} \in \operatorname{Var}(\mathfrak{c}) \text{ and all } i < \dim_{R_{\mathfrak{q}}} M_{\mathfrak{q}}.$$

9.4.12 Exercise. Let the situation be as in Proposition 9.4.10. Prove that there exists $n \in \mathbb{N}$ such that, for every choice of flat ring homomorphism $f : R \to R'$ of commutative Noetherian rings and every choice of proper ideal $\mathfrak{B}'$ of R', we have

$$\mathfrak{c}_t(M)^n H^i_{\mathfrak{B}'}(M \otimes_R R') = 0 \qquad \text{for all } i < \operatorname{grade} \mathfrak{B}' - t.$$

(Here is a hint: make appropriate modifications to the preparatory results, such as 9.4.1, 9.4.3 and 9.4.5, that were used in our approach to the proof of Proposition 9.4.10.)

9.4.13 Exercise. (The result of this exercise is due to C. L. Huneke.) Assume that R is a homomorphic image of a regular (commutative Noetherian) ring for which there exists a non-zerodivisor $c \in R$ such that the ring R_c is Cohen-Macaulay. Assume that either (a) R is an integral domain, or (b) R is an equidimensional (see [35, p. 250]) local ring.

Use Exercise 9.4.12 above to prove that there exists $n \in \mathbb{N}$ such that, for all choices of $r \in \mathbb{N}_0$ and all choices of an ideal $\mathfrak{B}'$ of the polynomial ring $R[X_1, \ldots, X_r]$ (interpret this as R in the case when $r = 0$), we have

$$c^n H^i_{\mathfrak{B}'}(R[X_1, \ldots, X_r]) = 0 \qquad \text{for all } i < \operatorname{ht} \mathfrak{B}'.$$

9.4.14 Lemma. *Let $(R, \mathfrak{m})$ be a regular local ring of dimension d, let M be a finitely generated R-module, and let $\mathfrak{b}$ be a proper ideal of R. Then, with the notation of 9.4.8, we have $\mathfrak{b} \subseteq \mathfrak{c}_{d-\lambda^{\mathfrak{b}}_{\mathfrak{m}}(M)}(M)$.*

Proof. Set $t := d - \lambda^{\mathfrak{b}}_{\mathfrak{m}}(M)$. It is enough to prove that, for each $\mathfrak{p} \in C_t(M)$, we must have $\mathfrak{b} \subseteq \mathfrak{p}$. Suppose that, for one such $\mathfrak{p}$, we have $\mathfrak{b} \nsubseteq \mathfrak{p}$, and look for a

contradiction. Then ($\mathfrak{p} \in \operatorname{Supp}(M)$ and)

$$\infty > \operatorname{adj}_{\mathfrak{m}} \operatorname{depth} M_{\mathfrak{p}} = \operatorname{depth} M_{\mathfrak{p}} + \operatorname{ht}(\mathfrak{m}+\mathfrak{p})/\mathfrak{p} \geq \lambda^{\mathfrak{b}}_{\mathfrak{m}}(M).$$

Since R is a catenary domain, $\operatorname{ht}(\mathfrak{m}+\mathfrak{p})/\mathfrak{p} = \operatorname{ht}\mathfrak{m}/\mathfrak{p} = d - \operatorname{ht}\mathfrak{p}$. As $R_{\mathfrak{p}}$ is a regular local ring, it follows from the Auslander-Buchsbaum-Serre Theorem that $\operatorname{depth} M_{\mathfrak{p}} + \operatorname{proj\,dim} M_{\mathfrak{p}} = \dim R_{\mathfrak{p}} = \operatorname{ht}\mathfrak{p}$. Therefore

$$\operatorname{ht}\mathfrak{p} - \operatorname{proj\,dim} M_{\mathfrak{p}} + d - \operatorname{ht}\mathfrak{p} \geq \lambda^{\mathfrak{b}}_{\mathfrak{m}}(M),$$

so that $\operatorname{proj\,dim} M_{\mathfrak{p}} \leq t$. This contradiction completes the proof. □

We remind the reader that our present major aim is a proof of the fact that, when R is a homomorphic image of a regular ring, then, with the notation of 9.1.5 and 9.2.2, we have $\lambda^{\mathfrak{b}}_{\mathfrak{a}}(M) \leq f^{\mathfrak{b}}_{\mathfrak{a}}(M)$. In view of 9.1.7 and 9.2.6, it will be enough to do this in the case when R itself is regular. In the light of this, the next result already proves our desired inequality in a special case.

9.4.15 Proposition. *Assume that R is regular, and that* $\dim R/\mathfrak{a} = 0$. *Let* $\mathfrak{b}$ *be a second ideal of R such that* $\mathfrak{b} \subseteq \mathfrak{a}$, *and let M be a finitely generated R-module. Then*

$$\lambda^{\mathfrak{b}}_{\mathfrak{a}}(M) \leq f^{\mathfrak{b}}_{\mathfrak{a}}(M).$$

Proof. Since $\dim R/\mathfrak{a} = 0$, we have $\operatorname{Var}(\mathfrak{a}) = \operatorname{ass}\mathfrak{a}$ is a finite set of maximal ideals of R: let its members be $\mathfrak{m}_1, \ldots, \mathfrak{m}_h$. Consider an integer j with $1 \leq j \leq h$. Set $t_j := \operatorname{ht}\mathfrak{m}_j - \lambda^{\mathfrak{b}R_{\mathfrak{m}_j}}_{\mathfrak{m}_jR_{\mathfrak{m}_j}}(M_{\mathfrak{m}_j})$. Since $\operatorname{ht}\mathfrak{m}_j = \operatorname{grade}\mathfrak{m}_jR_{\mathfrak{m}_j}$, we can deduce from 9.4.10 that there exists $n_j \in \mathbb{N}$ such that

$$\mathfrak{c}_{t_j}(M_{\mathfrak{m}_j})^{n_j} H^i_{\mathfrak{m}_jR_{\mathfrak{m}_j}}(M_{\mathfrak{m}_j}) = 0 \quad \text{for all } i < \operatorname{grade}\mathfrak{m}_jR_{\mathfrak{m}_j} - t_j = \lambda^{\mathfrak{b}R_{\mathfrak{m}_j}}_{\mathfrak{m}_jR_{\mathfrak{m}_j}}(M_{\mathfrak{m}_j}).$$

By 9.4.14, we have $\mathfrak{b}R_{\mathfrak{m}_j} \subseteq \mathfrak{c}_{t_j}(M_{\mathfrak{m}_j})$.

Set $n := \max\{n_1, \ldots, n_h\}$. We can use 1.1.3 and 4.3.3 to see that

$$H^i_{\mathfrak{m}_jR_{\mathfrak{m}_j}}(M_{\mathfrak{m}_j}) = H^i_{\mathfrak{a}R_{\mathfrak{m}_j}}(M_{\mathfrak{m}_j}) \cong (H^i_{\mathfrak{a}}(M))_{\mathfrak{m}_j}.$$

Also

$$\lambda^{\mathfrak{b}R_{\mathfrak{m}_j}}_{\mathfrak{m}_jR_{\mathfrak{m}_j}}(M_{\mathfrak{m}_j}) = \lambda^{\mathfrak{b}R_{\mathfrak{m}_j}}_{\mathfrak{a}R_{\mathfrak{m}_j}}(M_{\mathfrak{m}_j}) \geq \lambda^{\mathfrak{b}}_{\mathfrak{a}}(M),$$

by 9.2.3(i) and 9.2.5. It therefore follows that

$$(\mathfrak{b}^n H^i_{\mathfrak{a}}(M))_{\mathfrak{m}_j} \cong (\mathfrak{b}R_{\mathfrak{m}_j})^n H^i_{\mathfrak{m}_jR_{\mathfrak{m}_j}}(M_{\mathfrak{m}_j}) = 0 \qquad \text{for } 1 \leq j \leq h,\ i < \lambda^{\mathfrak{b}}_{\mathfrak{a}}(M).$$

Since a local cohomology module with respect to $\mathfrak{a}$ is $\mathfrak{a}$-torsion, the support of such a local cohomology module must be contained in $\operatorname{Var}(\mathfrak{a}) = \{\mathfrak{m}_1, \ldots, \mathfrak{m}_h\}$.

Hence

$$\operatorname{Supp}\left(\mathfrak{b}^n H^i_{\mathfrak{a}}(M)\right) = \emptyset \qquad \text{for all } i < \lambda^{\mathfrak{b}}_{\mathfrak{a}}(M).$$

In view of the definition of $f^{\mathfrak{b}}_{\mathfrak{a}}(M)$ (see 9.1.5), this completes the proof. □

9.4.16 Theorem. *Assume that R is a homomorphic image of a regular (commutative Noetherian) ring. Let $\mathfrak{b}$ be a second ideal of R such that $\mathfrak{b} \subseteq \mathfrak{a}$, and let M be a finitely generated R-module. Then*

$$\lambda^{\mathfrak{b}}_{\mathfrak{a}}(M) \leq f^{\mathfrak{b}}_{\mathfrak{a}}(M).$$

Proof. In view of 9.1.7 and 9.2.6, we can (and do) assume that R itself is regular.

We suppose that $\lambda^{\mathfrak{b}}_{\mathfrak{a}}(M) > f^{\mathfrak{b}}_{\mathfrak{a}}(M)$ and look for a contradiction. Let $\mathscr{I}(R)$ denote the set of all ideals of R. Since R is Noetherian, we can (and do) assume that $\mathfrak{a}$ is a maximal member of the set

$$\left\{\mathfrak{a}' \in \mathscr{I}(R) : \text{ there exists } \mathfrak{b}' \in \mathscr{I}(R) \text{ with } \mathfrak{b}' \subseteq \mathfrak{a}' \text{ and } \lambda^{\mathfrak{b}'}_{\mathfrak{a}'}(M) > f^{\mathfrak{b}'}_{\mathfrak{a}'}(M)\right\}.$$

Note that $\dim R/\mathfrak{a} > 0$, by 9.4.15. Set $\lambda := \lambda^{\mathfrak{b}}_{\mathfrak{a}}(M)$, and let $\mathfrak{q}$ be a minimal prime of $\mathfrak{a}$ such that $\operatorname{ht}\mathfrak{q} = \operatorname{ht}\mathfrak{a}$. By 9.4.14, 9.4.9, 9.2.5, 9.2.3(i) and 9.4.8(iv),

$$\mathfrak{b}R_{\mathfrak{q}} \subseteq \mathfrak{c}_{\operatorname{ht}\mathfrak{a}-\lambda^{\mathfrak{b}R_{\mathfrak{q}}}_{\mathfrak{a}R_{\mathfrak{q}}}(M_{\mathfrak{q}})}(M_{\mathfrak{q}}) = \left(\mathfrak{c}_{\operatorname{ht}\mathfrak{a}-\lambda^{\mathfrak{b}R_{\mathfrak{q}}}_{\mathfrak{a}R_{\mathfrak{q}}}(M_{\mathfrak{q}})}(M)\right)_{\mathfrak{q}} \subseteq (\mathfrak{c}_{\operatorname{ht}\mathfrak{a}-\lambda}(M))_{\mathfrak{q}}.$$

Therefore, there exists $u \in R\backslash\mathfrak{q}$ such that $\mathfrak{b}R_u \subseteq (\mathfrak{c}_{\operatorname{ht}\mathfrak{a}-\lambda}(M))_u$. Since $\dim R/\mathfrak{a} > 0$, there exists $\mathfrak{s} \in \operatorname{Var}(\mathfrak{a})$ which is not a minimal prime of $\mathfrak{a}$: let $v \in \mathfrak{s} \setminus \mathfrak{q}$ and put $s := uv$. Note that (by 9.4.9 again)

$$\mathfrak{a} \subset \mathfrak{a} + Rs \subset R \qquad \text{and} \qquad \mathfrak{b}R_s \subseteq (\mathfrak{c}_{\operatorname{ht}\mathfrak{a}-\lambda}(M))_s = \mathfrak{c}_{\operatorname{ht}(\mathfrak{a}R_s)-\lambda}(M_s).$$

Since $\operatorname{ht}\mathfrak{a}R_s = \operatorname{grade}\mathfrak{a}R_s$, it follows from 9.4.10 that there exists $n \in \mathbb{N}$ such that

$$\left(\mathfrak{c}_{\operatorname{ht}(\mathfrak{a}R_s)-\lambda}(M_s)\right)^n H^i_{\mathfrak{a}R_s}(M_s) = 0 \qquad \text{for all } i < \lambda.$$

Hence $\mathfrak{b}^n H^i_{\mathfrak{a}R_s}(M_s) = 0$ for all $i < \lambda$ (when $H^i_{\mathfrak{a}R_s}(M_s)$ is regarded as an R-module in the natural way). Therefore, by the Independence Theorem 4.2.1, we have $\mathfrak{b}^n H^i_{\mathfrak{a}}(M_s) = 0$ for all $i < \lambda$.

Since $\mathfrak{a} \subset \mathfrak{a} + Rs$, it follows from the 'maximality' assumption about $\mathfrak{a}$ made in the second paragraph of this proof that $\lambda^{\mathfrak{b}}_{\mathfrak{a}+Rs}(M) \leq f^{\mathfrak{b}}_{\mathfrak{a}+Rs}(M)$. Now $\lambda = \lambda^{\mathfrak{b}}_{\mathfrak{a}}(M) \leq \lambda^{\mathfrak{b}}_{\mathfrak{a}+Rs}(M)$, by 9.2.3(ii), and so there exists $n' \in \mathbb{N}$ such that $\mathfrak{b}^{n'} H^i_{\mathfrak{a}+Rs}(M) = 0$ for all $i < \lambda$.

By 8.1.2, there is, for each $i < \lambda$, an exact sequence

$$H^i_{\mathfrak{a}+Rs}(M) \longrightarrow H^i_{\mathfrak{a}}(M) \longrightarrow H^i_{\mathfrak{a}}(M_s).$$

It now follows from 9.1.1 that $\mathfrak{b} \subseteq \sqrt{(0 : H^i_{\mathfrak{a}}(M))}$ for all $i < \lambda$. This shows that $\lambda = \lambda^{\mathfrak{b}}_{\mathfrak{a}}(M) \leq f^{\mathfrak{b}}_{\mathfrak{a}}(M)$, and this contradiction completes the proof. □

9.5 The main theorems

We can now put together Theorems 9.3.5 and 9.4.16 to prove Faltings' Annihilator Theorem.

9.5.1 Faltings' Annihilator Theorem [10]. *Assume that R is a homomorphic image of a regular (commutative Noetherian) ring. Let $\mathfrak{b}$ be a second ideal of R such that $\mathfrak{b} \subseteq \mathfrak{a}$, and let M be a finitely generated R-module. Then*

$$\lambda^{\mathfrak{b}}_{\mathfrak{a}}(M) = f^{\mathfrak{b}}_{\mathfrak{a}}(M).$$

Proof. This is now immediate from Theorems 9.3.5 and 9.4.16. □

The special case of Faltings' Annihilator Theorem in which $\mathfrak{a} = \mathfrak{b}$ is Grothendieck's Finiteness Theorem.

9.5.2 Grothendieck's Finiteness Theorem (see [19, Exposé VIII, Corollaire 2.3]). *Assume that R is a homomorphic image of a regular (commutative Noetherian) ring, and let M be a finitely generated R-module. Then*

$$\lambda^{\mathfrak{a}}_{\mathfrak{a}}(M) = f_{\mathfrak{a}}(M).$$

In other words, there exists $i \in \mathbb{N}$ such that $H^i_{\mathfrak{a}}(M)$ is not finitely generated if and only if $\operatorname{Supp}(M) \nsubseteq \operatorname{Var}(\mathfrak{a})$*; moreover, when this is the case, the least $i \in \mathbb{N}$ such that $H^i_{\mathfrak{a}}(M)$ is not finitely generated is equal to*

$$\min\{\operatorname{depth} M_{\mathfrak{p}} + \operatorname{ht}(\mathfrak{a} + \mathfrak{p})/\mathfrak{p} : \mathfrak{p} \in \operatorname{Supp}(M) \setminus \operatorname{Var}(\mathfrak{a})\}.$$

Proof. Put $\mathfrak{a} = \mathfrak{b}$ in Faltings' Annihilator Theorem 9.5.1, and use 9.1.2 for the last part. □

9.5.3 Example. Let K be a field, and let $R = K[X, Y^2, XY, Y^3]$, a subring of the ring of polynomials $K[X, Y]$. Let $\mathfrak{m}$ denote the maximal ideal (X, Y^2, XY, Y^3) of R.

In the ring of polynomials $R[Z]$, let $\mathfrak{N} = \mathfrak{m}R[Z] + ZR[Z]$. We first calculate the invariant $\lambda^{\mathfrak{N}}_{\mathfrak{N}}(R[Z])$. Let $\mathfrak{P} \in \operatorname{Spec}(R[Z]) \setminus \operatorname{Var}(\mathfrak{N})$: we calculate $\operatorname{adj}_{\mathfrak{N}} \operatorname{depth} R[Z]_{\mathfrak{P}}$. Two cases arise: if $\mathfrak{P} = 0$, then the fact that $\operatorname{ht} \mathfrak{N} = 3$ implies that $\operatorname{adj}_{\mathfrak{N}} \operatorname{depth} R[Z]_0 = 3$; if $\mathfrak{P} \neq 0$, then the fact that $R[Z]_{\mathfrak{P}}$ is a local domain which is not a field ensures that

$$\operatorname{adj}_{\mathfrak{N}} \operatorname{depth} R[Z]_{\mathfrak{P}} = \operatorname{depth} R[Z]_{\mathfrak{P}} + \operatorname{ht}(\mathfrak{N} + \mathfrak{P})/\mathfrak{P} \geq 1 + 1 = 2.$$

Thus $\lambda_{\mathfrak{N}}^{\mathfrak{N}}(R[Z]) \geq 2$. To see that $\lambda_{\mathfrak{N}}^{\mathfrak{N}}(R[Z])$ is exactly 2, note that $\mathfrak{m}R[Z] \in \operatorname{Spec}(R[Z]) \setminus \operatorname{Var}(\mathfrak{N})$. Now $\operatorname{ht} \mathfrak{N}/\mathfrak{m}R[Z] = 1$ since the ideal $\mathfrak{N}/\mathfrak{m}R[Z]$ is principal. Moreover, it follows from 2.3.6(v) that $H_{\mathfrak{m}}^1(R) \neq 0$; hence, since R is a domain, we can deduce from 6.2.7 that $\operatorname{grade} \mathfrak{m} = 1$. Now X is a non-zerodivisor on R; the fact that $\mathfrak{m}$ is a maximal ideal of R ensures that $\mathfrak{m} \in \operatorname{ass}_R RX$; and it is now easy to deduce that $\operatorname{depth} R[Z]_{\mathfrak{m}R[Z]} = 1$. Hence

$$\operatorname{adj}_{\mathfrak{N}} \operatorname{depth} R[Z]_{\mathfrak{m}R[Z]} = \operatorname{depth} R[Z]_{\mathfrak{m}R[Z]} + \operatorname{ht} \mathfrak{N}/\mathfrak{m}R[Z] = 1 + 1 = 2.$$

Therefore $\lambda_{\mathfrak{N}}^{\mathfrak{N}}(R[Z]) = 2$.

Grothendieck's Finiteness Theorem 9.5.2 thus tells us that the finiteness dimension $f_{\mathfrak{N}}(R[Z])$ is 2. Let us show this directly.

Since Z, X is an $R[Z]$-sequence contained in $\mathfrak{N}$, it follows from 6.2.7 that $H_{\mathfrak{N}}^0(R[Z]) = H_{\mathfrak{N}}^1(R[Z]) = 0$. Further, for each $t \in \mathbb{N}$, the exact sequence

$$0 \longrightarrow R[Z] \xrightarrow{Z^t} R[Z] \longrightarrow R[Z]/Z^t R[Z] \longrightarrow 0$$

induces an exact sequence

$$0 \longrightarrow H_{\mathfrak{N}}^1(R[Z]/Z^t R[Z]) \longrightarrow H_{\mathfrak{N}}^2(R[Z]) \xrightarrow{Z^t} H_{\mathfrak{N}}^2(R[Z]);$$

hence $(0 :_{H_{\mathfrak{N}}^2(R[Z])} Z^t) \cong H_{\mathfrak{N}}^1(R[Z]/Z^t R[Z])$. But, by 1.1.3 and 4.2.2,

$$\begin{aligned} H_{\mathfrak{N}}^1(R[Z]/Z^t R[Z]) &= H_{\mathfrak{m}R[Z]+Z^t R[Z]}^1(R[Z]/Z^t R[Z]) \\ &\cong H_{\mathfrak{m}R[Z]}^1(R[Z]/Z^t R[Z]). \end{aligned}$$

The Independence Theorem 4.2.1 shows that, as R-modules,

$$H_{\mathfrak{m}R[Z]}^1(R[Z]/Z^t R[Z]) \cong H_{\mathfrak{m}}^1(R[Z]/Z^t R[Z]) \cong H_{\mathfrak{m}}^1(R^t);$$

this is isomorphic to the R-module K^t, by 2.3.6(v). Therefore

$$(0 :_{H_{\mathfrak{N}}^2(R[Z])} Z^t) \subset (0 :_{H_{\mathfrak{N}}^2(R[Z])} Z^{t+1}) \qquad \text{for all } t \in \mathbb{N},$$

and so $H_{\mathfrak{N}}^2(R[Z])$ is not finitely generated. Thus we have shown directly that the finiteness dimension $f_{\mathfrak{N}}(R[Z])$ is 2.

9.5.4 Exercise. Assume that the local ring $(R, \mathfrak{m})$ is a homomorphic image of a regular local ring, and let M be a finitely generated R-module.

(i) Show that

$$f_{\mathfrak{m}}(M) = \inf \{\operatorname{depth} M_{\mathfrak{p}} + 1 : \mathfrak{p} \in \operatorname{Spec}(R) \text{ and } \dim R/\mathfrak{p} = 1\}.$$

(ii) Suppose that $n := \dim M > 0$. Prove that $f_{\mathfrak{m}}(M) = n$ if and only if $M_{\mathfrak{p}}$ is a Cohen-Macaulay $R_{\mathfrak{p}}$-module of dimension $n - \dim R/\mathfrak{p}$ for all $\mathfrak{p} \in \operatorname{Supp}(M) \setminus \{\mathfrak{m}\}$.

9.5.5 Exercise. Assume that $(R, \mathfrak{m})$ is a local domain which is a homomorphic image of a regular local ring; assume also that $d := \dim R > 0$, and that $R_{\mathfrak{p}}$ is a Cohen-Macaulay ring for all $\mathfrak{p} \in \operatorname{Spec}(R) \setminus \{\mathfrak{m}\}$.

Show that if $H^i_{\mathfrak{m}}(R) = 0$ for all integers i such that $1 < i < d$, then there exists a Cohen-Macaulay subring of the quotient field of R which contains R and is a finitely generated R-module. (Here is a hint: think of $D_{\mathfrak{m}}(R)$.)

9.5.6 Exercise. Assume that $(R, \mathfrak{m})$ is a local domain which is a homomorphic image of a regular local ring, and that the ideal $\mathfrak{a}$ is proper. Show that $f_{\mathfrak{a}}(R) > 1$ if and only if $\operatorname{ht} \mathfrak{a} \neq 1$.

9.5.7 Exercise. Assume that $(R, \mathfrak{m})$ is local, and let M be a non-zero finitely generated R-module of dimension $n > 0$. We say that M is a *generalized Cohen-Macaulay R-module* precisely when $H^i_{\mathfrak{m}}(M)$ is finitely generated for all $i \neq n$. (Such modules were called 'quasi-Cohen-Macaulay modules' by P. Schenzel in [53, p. 238]; these modules were investigated by Schenzel, N. V. Trung and N. T. Cuong in [55], and, since the publication of that paper, the terminology 'generalized Cohen-Macaulay module' seems to have become more commonplace than 'quasi-Cohen-Macaulay module'.)

(i) Show that, if M is a generalized Cohen-Macaulay R-module, then $\dim R/\mathfrak{p} = n$ for all $\mathfrak{p} \in \operatorname{Ass} M \setminus \{\mathfrak{m}\}$ and $M_{\mathfrak{q}}$ is a Cohen-Macaulay $R_{\mathfrak{q}}$-module for all $\mathfrak{q} \in \operatorname{Supp}(M) \setminus \{\mathfrak{m}\}$.

(ii) Show conversely, that if

(a) R is a homomorphic image of a regular ring,

(b) $\dim R/\mathfrak{p} = n$ whenever $\mathfrak{p}$ is a minimal member of $\operatorname{Supp}(M)$, and

(c) $M_{\mathfrak{q}}$ is a Cohen-Macaulay $R_{\mathfrak{q}}$-module for all $\mathfrak{q} \in \operatorname{Supp}(M) \setminus \{\mathfrak{m}\}$,

then M is a generalized Cohen-Macaulay R-module.

9.5.8 Exercise. Assume that $(R, \mathfrak{m})$ is local, and that the non-zero finitely generated R-module M of dimension $n > 0$ is a generalized Cohen-Macaulay R-module (see 9.5.7 above). Note that $\mathfrak{m} \notin \operatorname{Ass}(M/\Gamma_{\mathfrak{m}}(M))$ and $M_{\mathfrak{p}} \cong (M/\Gamma_{\mathfrak{m}}(M))_{\mathfrak{p}}$ for all $\mathfrak{p} \in \operatorname{Spec}(R) \setminus \{\mathfrak{m}\}$.

(i) Let $r \in \mathfrak{m}$ be such that $\dim M/rM = n - 1$. Show that r is a non-zerodivisor on $M/\Gamma_{\mathfrak{m}}(M)$ and that, if $n > 1$, then M/rM is a generalized Cohen-Macaulay R-module.

(ii) Use part (i) and induction on n to show that every saturated chain of prime ideals from a minimal member of $\operatorname{Supp}(M)$ (as smallest term) to $\mathfrak{m}$ (as largest term) has length n.

(iii) Deduce from part (ii) that the ring $R/(0 : M)$ is catenary.

9.5.9 Definitions. Assume that $(R, \mathfrak{m})$ is local, and let M be a non-zero finitely generated R-module of dimension $n > 0$.

(i) By a *system of parameters for* M we mean a sequence $(r_i)_{i=1}^n$ of n elements of $\mathfrak{m}$ such that $M/\sum_{i=1}^n r_i M$ has finite length. We say that $r_1, \ldots, r_n$ *form a system of parameters for* M precisely when $(r_i)_{i=1}^n$ is a system of parameters for M. By *a parameter for* M, we mean a member of a system of parameters for M.

(ii) Let $(r_i)_{i=1}^n$ be a system of parameters for M; let $\mathfrak{q} := \sum_{i=1}^n r_i R$. We say that $(r_i)_{i=1}^n$ is a *standard system of parameters for* M precisely when

$$\mathfrak{q} H_{\mathfrak{m}}^j \left(M / \textstyle\sum_{i=1}^k r_i M \right) = 0 \qquad \text{for all } j, k \in \mathbb{N}_0 \text{ with } j + k < n.$$

(See Stückrad and Vogel [63, p. 261].)

9.5.10 Exercise. Assume that $(R, \mathfrak{m})$ is local, and let M be a non-zero finitely generated R-module of dimension $n > 1$. Let $(v_i)_{i=1}^n$ be a system of parameters for M, let $t \in \mathbb{N}$ with $t < n$, and let $M' := M/\sum_{i=1}^t v_i M$. Let $r_1, \ldots, r_{n-t} \in \mathfrak{m}$. Show that

(i) $\dim M' = n - t$;

(ii) $v_1, \ldots, v_t, r_1, \ldots, r_{n-t}$ form a system of parameters for M if and only if $(r_i)_{i=1}^{n-t}$ is a system of parameters for M';

(iii) if $(r_i)_{i=1}^{n-t}$ is a system of parameters for M' and $h \in \mathbb{N}_0$ is such that $h < n - t$, then $M'/\sum_{i=1}^h r_i M' \cong M/(\sum_{i=1}^t v_i M + \sum_{i=1}^h r_i M)$;

(iv) if every system of parameters for M is standard, then every system of parameters for M' is standard.

9.5.11 Exercise. Assume that $(R, \mathfrak{m})$ is local, and that M is a generalized Cohen-Macaulay R-module of dimension $n > 1$. Let r be a parameter for M, and write $\overline{M} = M/\Gamma_{\mathfrak{m}}(M)$. Show that

(i) $(0 : H_{\mathfrak{m}}^i(\overline{M}))(0 : H_{\mathfrak{m}}^{i+1}(\overline{M})) \subseteq (0 : H_{\mathfrak{m}}^i(\overline{M}/r\overline{M}))\ \forall\ i = 1, \ldots, n-2$;

(ii) $(0 : H_{\mathfrak{m}}^0(M))(0 : H_{\mathfrak{m}}^1(M/(0 :_M r))) \subseteq (0 : H_{\mathfrak{m}}^0(M/rM))$;

(iii) $(0 :_M r)$ is $\mathfrak{m}$-torsion; and

(iv) $(0 : H_{\mathfrak{m}}^i(M))(0 : H_{\mathfrak{m}}^{i+1}(M)) \subseteq (0 : H_{\mathfrak{m}}^i(M/rM))\ \forall\ i = 0, 1, \ldots, n-2$.

9.5.12 Exercise. Assume that $(R, \mathfrak{m})$ is local, and that M is a generalized Cohen-Macaulay R-module of dimension $n > 0$. Let

$$\mathfrak{q}_M := \left(0 : H_{\mathfrak{m}}^0(M)\right)^{\binom{n-1}{0}} \left(0 : H_{\mathfrak{m}}^1(M)\right)^{\binom{n-1}{1}} \ldots \left(0 : H_{\mathfrak{m}}^{n-1}(M)\right)^{\binom{n-1}{n-1}}.$$

Prove that every system of parameters for M composed of elements in $\mathfrak{q}_M$ is standard (see 9.5.9). (Here is a hint: use Exercises 9.5.11 and 9.5.8, together with induction.)

9.5.13 Exercise. Assume that $(R, \mathfrak{m})$ is local, and let M be a non-zero finitely generated R-module of dimension $n > 0$. Assume that, for every system of parameters $(r_i)_{i=1}^n$ for M,

$$\mathfrak{m}\Gamma_{r_{k+1}R}\left(M/\textstyle\sum_{i=1}^k r_i M\right) = 0 \qquad \text{for all } k \in \mathbb{N}_0 \text{ with } k < n.$$

(i) Show that $(0 :_M r) = \Gamma_{\mathfrak{m}}(M)$ for each parameter r for M.

(ii) Use part (i) and induction to prove that $\mathfrak{m}H^j_{\mathfrak{m}}(M) = 0$ for all $j = 0, \ldots, n-1$.

9.5.14 Definitions and Exercise. Assume that $(R, \mathfrak{m})$ is local, and let M be a non-zero finitely generated R-module of dimension $n > 0$.

Let $a_1, \ldots, a_h \in \mathfrak{m}$. We say that $a_1, \ldots, a_h$ is a *weak M-sequence* precisely when

$$\left(\textstyle\sum_{j=1}^{i-1} a_j M :_M a_i\right) = \left(\textstyle\sum_{j=1}^{i-1} a_j M :_M \mathfrak{m}\right) \qquad \text{for all } i = 1, \ldots, h.$$

We say that M is a *Buchsbaum R-module* precisely when every sequence $r_1, \ldots, r_n$ forming a system of parameters for M is a weak M-sequence; we say that R is a *Buchsbaum ring* if and only if it is a Buchsbaum module over itself.

Show that M is a Buchsbaum R-module if and only if, for every system of parameters $(r_i)_{i=1}^n$ for M,

$$\mathfrak{m}\Gamma_{r_{k+1}R}\left(M/\textstyle\sum_{i=1}^k r_i M\right) = 0 \qquad \text{for all } k \in \mathbb{N}_0 \text{ with } k < n.$$

There is an extensive theory of Buchsbaum rings and modules: see Stückrad and Vogel [63]. The following final exercise in this section provides some alternative characterizations of Buchsbaum modules.

9.5.15 Exercise. Assume that $(R, \mathfrak{m})$ is local, and let M be a non-zero finitely generated R-module of dimension $n > 0$.

Prove that the following conditions on M are equivalent:

(i) for every system of parameters $(r_i)_{i=1}^n$ for M,

$$\mathfrak{m}H^j_{\mathfrak{m}}\left(M/\textstyle\sum_{i=1}^k r_i M\right) = 0 \qquad \text{for all } j, k \in \mathbb{N}_0 \text{ with } j + k < n;$$

(ii) every system of parameters for M is standard (see 9.5.9);

(iii) M is a Buchsbaum R-module (see 9.5.14).

(It is perhaps appropriate to give some hints. For the implication '(ii) $\Rightarrow$ (iii)', note that $\mathfrak{m}$ can be generated by parameters for M, and show that, if $(r_i)_{i=1}^n$ is a system of parameters for M, then condition (ii) implies that $M/\sum_{i=1}^k r_i M$ is a generalized Cohen-Macaulay R-module (see Exercise 9.5.7) for all $k = 0, \ldots, n-1$. For the implication '(iii) $\Rightarrow$ (i)', use 9.5.14 and 9.5.13.)

9.6 Extensions

The remaining exercises in this chapter are directed at those readers who are familiar with some fairly advanced concepts in commutative algebra, including formal fibres of local rings, universally catenary rings, and L. J. Ratliff's Theorem [35, Theorem 31.7] that a local ring $(R, \mathfrak{m})$ is universally catenary if and only if, for every $\mathfrak{p} \in \operatorname{Spec}(R)$ and for every minimal prime $\mathfrak{P}$ of the ideal $\mathfrak{p}\widehat{R}$ of $\widehat{R}$, we have $\dim \widehat{R}/\mathfrak{P} = \dim R/\mathfrak{p}$.

So far in this chapter, we have established the main results, that is, the Annihilator and Finiteness Theorems, under the hypothesis that the underlying ring is a homomorphic image of a regular ring. The remaining exercises in this chapter, in conjunction with the Local-global Principle 9.6.2 for Finiteness Dimensions, show that the result of the Finiteness Theorem holds under slightly weaker hypotheses, namely under the assumption that the underlying ring is universally catenary and has the property that all the formal fibres of all its localizations are Cohen-Macaulay rings. We consider the Local-global Principle, which is a consequence of the theorem of Faltings presented in 9.6.1 below, to be of considerable independent interest.

9.6.1 Theorem (Faltings [13, Satz 1]). *Let M be a finitely generated R-module, and let $t \in \mathbb{N}$. Then the following statements are equivalent:*

(i) *$H^i_{\mathfrak{a}}(M)$ is finitely generated for all $i < t$;*

(ii) *$H^i_{\mathfrak{a}R_{\mathfrak{p}}}(M_{\mathfrak{p}})$ is a finitely generated $R_{\mathfrak{p}}$-module for all $i < t$ and all $\mathfrak{p} \in \operatorname{Spec}(R)$.*

Proof. (i) $\Rightarrow$ (ii) Since 4.3.3 shows that $H^i_{\mathfrak{a}R_{\mathfrak{p}}}(M_{\mathfrak{p}}) \cong (H^i_{\mathfrak{a}}(M))_{\mathfrak{p}}$ for all $i \in \mathbb{N}_0$ and all $\mathfrak{p} \in \operatorname{Spec}(R)$, this implication is clear.

(ii) $\Rightarrow$ (i) We use induction on t. When $t = 1$, there is nothing to prove, since $H^0_{\mathfrak{a}}(M) = \Gamma_{\mathfrak{a}}(M)$ is a submodule of M, and so is finitely generated. So suppose that $t > 1$ and that the result has been proved for smaller values of t. By this inductive assumption, $H^i_{\mathfrak{a}}(M)$ is finitely generated for $i = 0, 1, \ldots, t-2$, and it only remains for us to prove that $H^{t-1}_{\mathfrak{a}}(M)$ is finitely generated.

Set $\overline{M} := M/\Gamma_{\mathfrak{a}}(M)$. Then, for each $\mathfrak{p} \in \operatorname{Spec}(R)$,

$$\overline{M}_{\mathfrak{p}} \cong M_{\mathfrak{p}}/(\Gamma_{\mathfrak{a}}(M))_{\mathfrak{p}} = M_{\mathfrak{p}}/\Gamma_{\mathfrak{a}R_{\mathfrak{p}}}(M_{\mathfrak{p}}),$$

and so it follows from 2.1.7(iii) that $H^i_{\mathfrak{a}R_{\mathfrak{p}}}(M_{\mathfrak{p}}) \cong H^i_{\mathfrak{a}R_{\mathfrak{p}}}(\overline{M}_{\mathfrak{p}})$ for all $i \in \mathbb{N}$ and all $\mathfrak{p} \in \operatorname{Spec}(R)$. It follows that $\overline{M}$ also satisfies condition (ii) in the statement of the theorem. Moreover, it would be sufficient for us to prove that $H^i_{\mathfrak{a}}(\overline{M})$ is finitely generated for all $i < t$, since $H^i_{\mathfrak{a}}(M) \cong H^i_{\mathfrak{a}}(\overline{M})$ for all $i \in \mathbb{N}$ (by 2.1.7(iii)) and it is automatic that $H^0_{\mathfrak{a}}(M)$ is finitely generated. Now $\overline{M}$ is an $\mathfrak{a}$-torsion-free

R-module, by 2.1.2. Hence we can (and do) assume that M is an $\mathfrak{a}$-torsion-free R-module.

We now use 2.1.1(ii) to deduce that $\mathfrak{a}$ contains an element r which is a non-zerodivisor on M. Let $n \in \mathbb{N}$ and let $\mathfrak{p} \in \operatorname{Spec}(R)$. The localization of the exact sequence $0 \longrightarrow M \xrightarrow{r^n} M \longrightarrow M/r^nM \longrightarrow 0$ at $\mathfrak{p}$ induces, for each $i \in \mathbb{N}_0$, an exact sequence

$$H^{i-1}_{\mathfrak{a}R_\mathfrak{p}}(M_\mathfrak{p}) \longrightarrow H^{i-1}_{\mathfrak{a}R_\mathfrak{p}}((M/r^nM)_\mathfrak{p}) \longrightarrow H^i_{\mathfrak{a}R_\mathfrak{p}}(M_\mathfrak{p}).$$

When $i < t$, the two outer modules in this last exact sequence are finitely generated, and therefore so also is the middle one. Thus $H^{i-1}_{\mathfrak{a}R_\mathfrak{p}}((M/r^nM)_\mathfrak{p})$ is a finitely generated $R_\mathfrak{p}$-module for all $i < t$ and all $\mathfrak{p} \in \operatorname{Spec}(R)$. Therefore, by the inductive hypothesis, $H^{i-1}_\mathfrak{a}(M/r^nM)$ is finitely generated for all $i < t$. Since the exact sequence $0 \longrightarrow M \xrightarrow{r^n} M \longrightarrow M/r^nM \longrightarrow 0$ induces an exact sequence

$$H^{t-2}_\mathfrak{a}(M/r^nM) \longrightarrow H^{t-1}_\mathfrak{a}(M) \xrightarrow{r^n} H^{t-1}_\mathfrak{a}(M),$$

it therefore follows that $(0 :_{H^{t-1}_\mathfrak{a}(M)} r^n)$ is finitely generated.

Set $H := H^{t-1}_\mathfrak{a}(M)$, and $H_n := (0 :_H r^n)$ for all $n \in \mathbb{N}$. Recall that our aim is to prove that H is finitely generated; we have just proved that H_n is finitely generated for all $n \in \mathbb{N}$. Note that

$$H_1 \subseteq H_2 \subseteq \ldots \subseteq H_n \subseteq H_{n+1} \subseteq \ldots,$$

and that, since $r \in \mathfrak{a}$ and H is an $\mathfrak{a}$-torsion R-module, $H = \bigcup_{n\in\mathbb{N}} H_n$. We shall achieve our aim by showing that there exists $k \in \mathbb{N}$ such that $H_k = H_{k+i}$ for all $i \in \mathbb{N}$: it will then follow that $H = H_k$, and the latter module is finitely generated.

For each $n \in \mathbb{N}$, let U_n denote the open subset $\operatorname{Spec}(R) \setminus \operatorname{Supp}(H_{n+1}/H_n)$ of $\operatorname{Spec}(R)$. The next two stages in our proof aim to show that $\operatorname{Spec}(R) = \bigcup_{n\in\mathbb{N}} U_n$ and

$$U_1 \subseteq U_2 \subseteq \ldots \subseteq U_i \subseteq U_{i+1} \subseteq \ldots.$$

Let $\mathfrak{p} \in \operatorname{Spec}(R)$. Then $H_\mathfrak{p} = (H^{t-1}_\mathfrak{a}(M))_\mathfrak{p} \cong H^{t-1}_{\mathfrak{a}R_\mathfrak{p}}(M_\mathfrak{p})$, and this is a finitely generated, $\mathfrak{a}R_\mathfrak{p}$-torsion, $R_\mathfrak{p}$-module. Therefore, there exists $n \in \mathbb{N}$ such that $H_\mathfrak{p} = (0 :_{H_\mathfrak{p}} r^n/1)$. Since

$$(0 :_{H_\mathfrak{p}} r^n/1) \subseteq (0 :_{H_\mathfrak{p}} r^{n+1}/1) \subseteq H_\mathfrak{p},$$

it follows that $(0 :_{H_\mathfrak{p}} r^n/1) = (0 :_{H_\mathfrak{p}} r^{n+1}/1)$. But $(0 :_{H_\mathfrak{p}} r^i/1) = (H_i)_\mathfrak{p}$ for all $i \in \mathbb{N}$. Therefore $(H_{n+1}/H_n)_\mathfrak{p} = 0$, and so $\mathfrak{p} \in U_n$. It follows that $\operatorname{Spec}(R) = \bigcup_{n\in\mathbb{N}} U_n$.

Next, let $i \in \mathbb{N}$ and $\mathfrak{p} \in U_i$. Then $(0 :_{H_\mathfrak{p}} r^i/1) = (0 :_{H_\mathfrak{p}} r^{i+1}/1)$, and so

$$\begin{aligned}(0 :_{H_\mathfrak{p}} r^{i+2}/1) &= \big((0 :_{H_\mathfrak{p}} r^{i+1}/1) :_{H_\mathfrak{p}} r/1\big)\\ &= \big((0 :_{H_\mathfrak{p}} r^{i}/1) :_{H_\mathfrak{p}} r/1\big) = (0 :_{H_\mathfrak{p}} r^{i+1}/1).\end{aligned}$$

Thus $(H_{i+2}/H_{i+1})_\mathfrak{p} = 0$, and so $\mathfrak{p} \in U_{i+1}$. Hence $U_i \subseteq U_{i+1}$ for all $i \in \mathbb{N}$.

Thus the sets U_i ($i \in \mathbb{N}$) form an ascending open cover of the quasi-compact topological space $\operatorname{Spec}(R)$. Therefore there exists $k \in \mathbb{N}$ such that $U_k = U_{k+i} = \operatorname{Spec}(R)$ for all $i \in \mathbb{N}$. Thus $\operatorname{Supp}(H_{k+1}/H_k) = \operatorname{Supp}(H_{k+i+1}/H_{k+i}) = \emptyset$ for all $i \in \mathbb{N}$, so that $H_k = H_{k+i}$ for all $i \in \mathbb{N}$. Thus $H = H_k$, and so is finitely generated.

This completes the inductive step. □

9.6.2 Local-global Principle for Finiteness Dimensions. *Let M be a finitely generated R-module. Then*

$$f_\mathfrak{a}(M) = \inf\left\{f_{\mathfrak{a}R_\mathfrak{p}}(M_\mathfrak{p}) : \mathfrak{p} \in \operatorname{Spec}(R)\right\}.$$

Proof. This is now immediate from Theorem 9.6.1 above and the definition of finiteness dimension in 9.1.3. □

9.6.3 Exercise. Assume that $(R, \mathfrak{m})$ is local. Let $\mathfrak{b}$ be a second ideal of R such that $\mathfrak{b} \subseteq \mathfrak{a}$, and let M be a finitely generated R-module. Prove that

$$f^{\mathfrak{b}\widehat{R}}_{\mathfrak{a}\widehat{R}}(M \otimes_R \widehat{R}) = f^{\mathfrak{b}}_{\mathfrak{a}}(M).$$

9.6.4 Exercise. Assume that $(R, \mathfrak{m})$ is local, that M is a finitely generated R-module, and that $\mathfrak{p} \in \operatorname{Spec}(R) \setminus \operatorname{Var}(\mathfrak{a})$. Let $h := \operatorname{ht}(\mathfrak{a} + \mathfrak{p})/\mathfrak{p}$.

(i) Prove that $\operatorname{ht}(\mathfrak{a}\widehat{R} + \mathfrak{p}\widehat{R})/\mathfrak{p}\widehat{R} = h$.

(ii) Let $\mathfrak{Q} \in \operatorname{Spec}(\widehat{R})$ be a minimal prime of $\mathfrak{a}\widehat{R} + \mathfrak{p}\widehat{R}$ with $\operatorname{ht}\mathfrak{Q}/\mathfrak{p}\widehat{R} = h$, and let $\mathfrak{P}$ be a minimal prime of $\mathfrak{p}\widehat{R}$ such that $\mathfrak{P} \subseteq \mathfrak{Q}$ and $\operatorname{ht}\mathfrak{Q}/\mathfrak{P} = h$. Show that

(a) $\mathfrak{P} \notin \operatorname{Var}(\mathfrak{a}\widehat{R})$ and $\operatorname{ht}(\mathfrak{a}\widehat{R} + \mathfrak{P})/\mathfrak{P} \leq h$,

(b) $\mathfrak{P} \cap R = \mathfrak{p}$,

(c) $\operatorname{depth}(M \otimes_R \widehat{R})_\mathfrak{P} = \operatorname{depth} M_\mathfrak{p}$, and

(d) $\operatorname{adj}_{\mathfrak{a}\widehat{R}} \operatorname{depth}(M \otimes_R \widehat{R})_\mathfrak{P} \leq \operatorname{adj}_\mathfrak{a} \operatorname{depth} M_\mathfrak{p}$.

(iii) Deduce that, if $\mathfrak{b}$ is a second ideal of R such that $\mathfrak{b} \subseteq \mathfrak{a}$, then

$$\lambda^{\mathfrak{b}\widehat{R}}_{\mathfrak{a}\widehat{R}}(M \otimes_R \widehat{R}) \leq \lambda^{\mathfrak{b}}_{\mathfrak{a}}(M).$$

9.6.5 Exercise. Let the situation be as in Exercise 9.6.4 above, and assume in addition that R is universally catenary and that all its formal fibres are Cohen-Macaulay rings.

(i) Let $\mathfrak{Q} \in \operatorname{Spec}(\widehat{R}) \setminus \operatorname{Var}(\mathfrak{a}\widehat{R})$. Show that $\mathfrak{q} := \mathfrak{Q} \cap R \in \operatorname{Spec}(R) \setminus \operatorname{Var}(\mathfrak{a})$ and that

$$\operatorname{adj}_{\mathfrak{a}} \operatorname{depth} M_{\mathfrak{q}} \leq \operatorname{adj}_{\mathfrak{a}\widehat{R}} \operatorname{depth}(M \otimes_R \widehat{R})_{\mathfrak{Q}}.$$

(You might find Ratliff's Theorem [35, Theorem 31.7] helpful.)

(ii) Deduce from part (i) and Exercise 9.6.4(iii) above that, if $\mathfrak{b}$ is a second ideal of R such that $\mathfrak{b} \subseteq \mathfrak{a}$, then

$$\lambda^{\mathfrak{b}\widehat{R}}_{\mathfrak{a}\widehat{R}}(M \otimes_R \widehat{R}) = \lambda^{\mathfrak{b}}_{\mathfrak{a}}(M).$$

9.6.6 Exercise. Assume that $(R, \mathfrak{m})$ is a universally catenary local ring all of whose formal fibres are Cohen-Macaulay rings. Prove that the conclusion of the Annihilator Theorem holds over R. In other words, prove that, if M is a finitely generated R-module and $\mathfrak{b}$ is a second ideal of R such that $\mathfrak{b} \subseteq \mathfrak{a}$, then $\lambda^{\mathfrak{b}}_{\mathfrak{a}}(M) = f^{\mathfrak{b}}_{\mathfrak{a}}(M)$.

9.6.7 Exercise. Assume that R is universally catenary and all the formal fibres of all its localizations are Cohen-Macaulay rings. Deduce from Exercise 9.6.6 above and the Local-global Principle 9.6.2 that the conclusion of the Finiteness Theorem holds over R. In other words, prove that, if M is a finitely generated R-module, then $\lambda^{\mathfrak{a}}_{\mathfrak{a}}(M) = f_{\mathfrak{a}}(M)$.

9.6.8 Exercise. Assume that $(R, \mathfrak{m})$ is a universally catenary local ring all of whose formal fibres are Cohen-Macaulay rings. Let M be a non-zero finitely generated R-module of dimension $n > 0$ such that

(a) $\dim R/\mathfrak{p} = n$ whenever $\mathfrak{p}$ is a minimal member of $\operatorname{Supp}(M)$, and

(b) $M_{\mathfrak{q}}$ is a Cohen-Macaulay $R_{\mathfrak{q}}$-module for all $\mathfrak{q} \in \operatorname{Supp}(M) \setminus \{\mathfrak{m}\}$.

Prove that M is a generalized Cohen-Macaulay R-module (see 9.5.7).

9.6.9 Exercise. (This exercise is related to Exercise 9.4.13.) Assume that R is a universally catenary semi-local integral domain with the property that all the formal fibres of all its localizations are Cohen-Macaulay rings. Assume that there exists $0 \neq c \in R$ such that the ring R_c is Cohen-Macaulay. Prove that there exists $n \in \mathbb{N}$ such that, for all choices of $r \in \mathbb{N}_0$ and all choices of an ideal $\mathfrak{B}'$ of the polynomial ring $R[X_1, \ldots, X_r]$, we have

$$c^n H^i_{\mathfrak{B}'}(R[X_1, \ldots, X_r]) = 0 \qquad \text{for all } i < \operatorname{ht} \mathfrak{B}'.$$

10

Matlis duality

Prior to this point in the book, we have not made use of the decomposition theory (due to E. Matlis [34]) for injective modules over our (Noetherian) ring R. However, our work in the next Chapter 11 on local duality will involve use of the structure of the terms in the minimal injective resolution of a Gorenstein local ring, and so we can postpone no longer use of the decomposition theory for injective modules. Our discussion of local duality in Chapter 11 will also involve Matlis duality.

Our purpose in this chapter is to prepare the ground for Chapter 11 by reviewing, sometimes in detail, those parts of Matlis's theories that we shall need later in the book. Sometimes we simply refer to [35, Section 18] for proofs; in other cases, we provide alternative proofs for the reader's convenience. An experienced reader who is familiar with this work of Matlis should omit this chapter and progress straight to the discussion of local duality in Chapter 11: for one thing, there is no local cohomology theory in this chapter! However, graduate students might find this chapter helpful.

10.1 Indecomposable injective modules

10.1.1 Reminders. Let M be a submodule of the R-module L.

(i) We say that L is an *essential extension* of M precisely when $B \cap M \neq 0$ for every non-zero submodule B of L.

(ii) We say that L is an *injective envelope* (or *injective hull*) of M precisely when L is an injective R-module which is also an essential extension of M.

(iii) (See [35, Theorem B4, p. 281].) The R-module M is injective if and only if the only essential extension of M is M itself.

(iv) If L is an injective envelope of M, and $g : M \longrightarrow K$ is an R-monomorphism from M into an injective R-module K, then there is a homo-

morphism $g' : L \to K$ such that the diagram

$$\begin{tikzcd} 0 \arrow[r] & M \arrow[r, "\subseteq"] \arrow[d, "g"'] & L \arrow[dl, "g'"] \\ & K & \end{tikzcd}$$

commutes. Since $\operatorname{Ker} g' \cap M = \operatorname{Ker} g = 0$, it follows from the fact that L is an essential extension of M that $\operatorname{Ker} g' = 0$ and g' is a monomorphism. Hence L is isomorphic to a direct summand of K.

(v) (See [35, p. 281].) Each R-module has an injective envelope which is uniquely determined up to isomorphism. In fact, if E and E' are both injective envelopes of M (so that each of E and E' is an injective R-module which contains M as a submodule, and each of E and E' is an essential extension of its submodule M), then there is an isomorphism $f : E \to E'$ such that the diagram

$$\begin{tikzcd} M \arrow[r] \arrow[dr] & E \arrow[d, "f", "\cong"'] \\ & E' \end{tikzcd}$$

(in which the unnamed homomorphisms are the inclusion maps) commutes.

(vi) We denote by $E(M)$ (or $E_R(M)$ if it is necessary to specify the underlying ring) one choice of injective envelope of M.

10.1.2 Example and Warning. The reader should be warned that the isomorphism $f : E \to E'$ of 10.1.1(v) need not be uniquely determined; for this reason, we cannot regard $E(\,\cdot\,)$ as a functor from $\mathscr{C}(R)$ to itself.

To illustrate this point, consider the submodule

$$C_2(\infty) := \left\{\alpha \in \mathbb{Q}/\mathbb{Z} : \alpha = \frac{r}{2^n} + \mathbb{Z} \text{ for some } r \in \mathbb{Z} \text{ and } n \in \mathbb{N}_0\right\}$$

of the $\mathbb{Z}$-module $\mathbb{Q}/\mathbb{Z}$. Since $C_2(\infty)$ is a divisible Abelian group, it is an injective $\mathbb{Z}$-module, by [52, Theorem 3.24] for example. Also $C_2(\infty)$ is an essential extension of its $\mathbb{Z}$-submodule $C_2 := \mathbb{Z}(\frac{1}{2} + \mathbb{Z})$. Now '$f = \mathrm{Id}_{C_2(\infty)}$' and '$f = -\mathrm{Id}_{C_2(\infty)}$' are two different choices of automorphism $f : C_2(\infty) \to C_2(\infty)$

for which the diagram

$$\begin{tikzcd} C_2 \arrow[r] \arrow[dr] & C_2(\infty) \arrow[d, "f", "\simeq"'] \\ & C_2(\infty) \end{tikzcd}$$

(in which the unnamed homomorphisms are the inclusion maps) commutes.

Injective envelopes play an essential rôle in the very satisfactory decomposition theory for injective R-modules: for one thing, the fundamental 'building blocks' on which the whole theory is based are described using the concept of injective envelope.

10.1.3 Reminders. (i) Let $(M_\iota)_{\iota\in\Lambda}$ be a non-empty family of R-modules. It is immediate from the definition of injective module that the direct product $\prod_{\iota\in\Lambda} M_\iota$ is an injective R-module if and only if M_ι is injective for all $\iota \in \Lambda$. However, since our ring R is Noetherian, it is also the case that the direct sum $\bigoplus_{\iota\in\Lambda} M_\iota$ is injective if and only if M_ι is injective for all $\iota \in \Lambda$: see Matsumura [35, Theorem 18.5(i)].

(ii) An R-module is said to be *indecomposable* precisely when it is non-zero and cannot be written as the direct sum of two proper submodules. For each $\mathfrak{p} \in \operatorname{Spec}(R)$, the injective R-module $E(R/\mathfrak{p})$ is indecomposable (see [35, Theorem 18.4(i)]); moreover, each indecomposable injective R-module is isomorphic to $E(R/\mathfrak{q})$ for some $\mathfrak{q} \in \operatorname{Spec}(R)$ (see [35, Theorem 18.4(ii)]).

(iii) Let $\mathfrak{p} \in \operatorname{Spec}(R)$ and let $r \in R \setminus \mathfrak{p}$. Then multiplication by r provides an automorphism of $E(R/\mathfrak{p})$ (see [35, Theorem 18.4(iii)]); moreover, each element of $E(R/\mathfrak{p})$ is annihilated by some power of $\mathfrak{p}$, that is, $E(R/\mathfrak{p})$ is $\mathfrak{p}$-torsion (see [35, Theorem 18.4(v)]).

(iv) Let $\mathfrak{p}, \mathfrak{q} \in \operatorname{Spec}(R)$. Then $E(R/\mathfrak{p}) \cong E(R/\mathfrak{q})$ if and only if $\mathfrak{p} = \mathfrak{q}$ (see [35, Theorem 18.4(iv)]).

(v) The results recounted in parts (ii) and (iv) above can be reformulated as follows: there is a *set* of isomorphism classes of indecomposable injective R-modules, and there is a bijective correspondence between this set and $\operatorname{Spec}(R)$, under which a $\mathfrak{p} \in \operatorname{Spec}(R)$ corresponds to the isomorphism class of $E(R/\mathfrak{p})$.

10.1.4 Exercise. Let $M_1, \ldots, M_n$ be R-modules. Show that the map

$$M_1 \oplus \cdots \oplus M_n \longrightarrow E(M_1) \oplus \cdots \oplus E(M_n)$$

(obtained by taking the direct sum of the inclusion maps) provides an injective envelope of $\bigoplus_{i=1}^{n} M_i$.

10.1.5 Exercise. Let M be a non-zero R-module. Show that the following statements are equivalent:

(i) $E(M)$ is indecomposable;

(ii) $E(M)$ is an injective envelope of every non-zero submodule of itself;

(iii) the zero submodule of M cannot be expressed as the intersection of two non-zero submodules of M.

10.1.6 Exercise. Let $\mathfrak{a}$ be a proper ideal of R. Show that $E(R/\mathfrak{a})$ is indecomposable if and only if $\mathfrak{a}$ is irreducible.

Let $\mathfrak{q}$ be a $\mathfrak{p}$-primary ideal of R. Prove that $E(R/\mathfrak{q})$ is isomorphic to a direct sum of finitely many copies of $E(R/\mathfrak{p})$. What can you say about the number of copies? (Here is a hint: recall that $\mathfrak{q}$ can be expressed as an intersection $\mathfrak{q} = \bigcap_{i=1}^{n} \mathfrak{j}_i$, where each $\mathfrak{j}_i$ (for $1 \leq i \leq n$) is irreducible and irredundant in the intersection. If you still find this exercise difficult, you might like to consult [60, Exercise 8.30].)

10.1.7 Exercise. Let $\mathfrak{p} \in \operatorname{Spec}(R)$.

(i) Let $0 \neq x \in E(R/\mathfrak{p})$. Show that $(0 : x)$ is an irreducible ideal of R.

(ii) In 10.1.3(iii), we saw that $E(R/\mathfrak{p}) = \bigcup_{n\in\mathbb{N}}(0 :_{E(R/\mathfrak{p})} \mathfrak{p}^n)$. Show that $E(R/\mathfrak{p}) = \bigcup_{n\in\mathbb{N}}(0 :_{E(R/\mathfrak{p})} \mathfrak{p}^{(n)})$.

In 10.1.3, we reviewed fundamental facts about indecomposable injective R-modules. One of the reasons for the importance of these modules is provided by the following.

10.1.8 Reminder. (See [35, Theorem 18.5(ii)].) Each injective R-module I is a direct sum of indecomposable injective submodules. Therefore, by 10.1.3(ii), there is a family $(\mathfrak{p}_\alpha)_{\alpha\in\Lambda}$ of prime ideals of R for which $I \cong \bigoplus_{\alpha\in\Lambda} E(R/\mathfrak{p}_\alpha)$.

10.1.9 Remark. Let the situation be as in 10.1.8. Then $\mathfrak{p}$ is equal to $\mathfrak{p}_\alpha$ for some $\alpha \in \Lambda$ if and only if $\mathfrak{p} \in \operatorname{Ass} I$.

10.1.10 Exercise. Let I be an injective R-module, so that, by 10.1.8, there is a family $(\mathfrak{p}_\alpha)_{\alpha\in\Lambda}$ of prime ideals of R for which $I \cong \bigoplus_{\alpha\in\Lambda} E(R/\mathfrak{p}_\alpha)$. Prove that

$$\Gamma_{\mathfrak{a}}(I) \cong \bigoplus_{\substack{\alpha\in\Lambda \\ \mathfrak{a}\subseteq\mathfrak{p}_\alpha}} E(R/\mathfrak{p}_\alpha).$$

(This exercise provides another proof of the result of Proposition 2.1.4 that $\Gamma_{\mathfrak{a}}(I)$ is an injective R-module.)

In fact, the direct decompositions described in 10.1.8 have uniqueness properties. The route taken by Matsumura in [35, §18] to these uniqueness properties involves facts about the behaviour of indecomposable injective R-modules under localization. We review this behaviour next.

10.1.11 Lemma. *Let S be a multiplicatively closed subset of R, and let G be an $S^{-1}R$-module. Then G is R-injective (that is, injective when viewed as an R-module by means of the natural homomorphism $R \to S^{-1}R$) if and only if G is $S^{-1}R$-injective.*

Proof. ($\Rightarrow$) Let H be an $S^{-1}R$-submodule of the $S^{-1}R$-module J, and let $h : H \to G$ be an $S^{-1}R$-homomorphism. Then H is an R-submodule of the R-module J, and h is an R-homomorphism. Since G is R-injective, there exists an R-homomorphism $j : J \to G$ which extends h. It is easy to check that j must be an $S^{-1}R$-homomorphism.

($\Leftarrow$) Let M be an R-submodule of the R-module N, and let $\lambda : M \to G$ be an R-homomorphism. As G is an $S^{-1}R$-module, the natural map $\psi : G \to S^{-1}G$ is not only an R-isomorphism but also an $S^{-1}R$-isomorphism. Thus $S^{-1}M$ is an $S^{-1}R$-submodule of the $S^{-1}R$-module $S^{-1}N$, and the composition $\psi^{-1} \circ S^{-1}\lambda : S^{-1}M \to G$ is an $S^{-1}R$-homomorphism.

Since G is $S^{-1}R$-injective, there exists an $S^{-1}R$-homomorphism $\mu' : S^{-1}N \to G$ which extends $\psi^{-1} \circ S^{-1}\lambda$. Then $\mu' \circ \theta : N \to G$, where $\theta : N \to S^{-1}N$ is the natural map, is an R-homomorphism which extends λ. □

10.1.12 Lemma. *Let S be a multiplicatively closed subset of R, and let $\mathfrak{p} \in \operatorname{Spec}(R)$ be such that $\mathfrak{p} \cap S = \emptyset$. By 10.1.3(iii), the indecomposable injective R-module $E_R(R/\mathfrak{p})$ has a natural structure as an $S^{-1}R$-module.*

As $S^{-1}R$-module, $E_R(R/\mathfrak{p})$ is isomorphic to $E_{S^{-1}R}(S^{-1}R/S^{-1}\mathfrak{p})$.

Furthermore, $E_{S^{-1}R}(S^{-1}R/S^{-1}\mathfrak{p})$, when considered as an R-module by means of the natural homomorphism $R \to S^{-1}R$, is isomorphic to $E_R(R/\mathfrak{p})$.

Proof. It follows from Lemma 10.1.11 that the $S^{-1}R$-module $E_R(R/\mathfrak{p})$ is $S^{-1}R$-injective. Since an $S^{-1}R$-submodule of $E_R(R/\mathfrak{p})$ is automatically an R-submodule, it is immediate from 10.1.3(ii) that $E_R(R/\mathfrak{p})$ is indecomposable as $S^{-1}R$-module; we can therefore deduce from the same result that $E_R(R/\mathfrak{p})$ is $S^{-1}R$-isomorphic to $E_{S^{-1}R}(S^{-1}R/\mathfrak{P})$ for some $\mathfrak{P} \in \operatorname{Spec}(S^{-1}R)$. By 10.1.3(iii),

$$\mathfrak{P} = \left\{\alpha \in S^{-1}R : \alpha \operatorname{Id}_{E_R(R/\mathfrak{p})} \text{ is not an isomorphism}\right\}.$$

Hence the contraction of $\mathfrak{P}$ to R is just

$$\{r \in R : r\,\mathrm{Id}_{E_R(R/\mathfrak{p})} \text{ is not an isomorphism}\} = \mathfrak{p}.$$

Therefore $\mathfrak{P} = S^{-1}\mathfrak{p}$.

The final claim is now immediate. □

10.1.13 Proposition. *Let S be a multiplicatively closed subset of R.*

(i) *Let $\mathfrak{p} \in \operatorname{Spec}(R)$. Then*

$$S^{-1}(E_R(R/\mathfrak{p})) \begin{cases} = 0 & \text{if } \mathfrak{p} \cap S \neq \emptyset, \\ \cong E_{S^{-1}R}(S^{-1}R/S^{-1}\mathfrak{p}) & \text{if } \mathfrak{p} \cap S = \emptyset. \end{cases}$$

(ii) *Let I be an injective R-module. Then $S^{-1}I$ is both $S^{-1}R$-injective and R-injective.*

Proof. (i) Suppose that $s \in \mathfrak{p} \cap S$. By 10.1.3(iii), each $x \in E(R/\mathfrak{p})$ is annihilated by some power of s, and so $S^{-1}(E_R(R/\mathfrak{p})) = 0$.

If, on the other hand, $\mathfrak{p} \cap S = \emptyset$, then, by 10.1.3(iii) again, $E(R/\mathfrak{p})$ has a natural structure as an $S^{-1}R$-module, so that $S^{-1}(E(R/\mathfrak{p})) \cong E(R/\mathfrak{p})$ both as R-modules and $S^{-1}R$-modules. We can now use 10.1.12 to complete the proof of part (i).

(ii) By 10.1.8, there is a family $(\mathfrak{p}_\alpha)_{\alpha\in\Lambda}$ of prime ideals of R for which $I \cong \bigoplus_{\alpha\in\Lambda} E(R/\mathfrak{p}_\alpha)$. Then

$$S^{-1}I \cong \bigoplus_{\alpha\in\Lambda} S^{-1}(E(R/\mathfrak{p}_\alpha))$$

(as $S^{-1}R$-modules); since, by (i), each $S^{-1}(E(R/\mathfrak{p}_\alpha))$ in the above display is $S^{-1}R$-injective, it follows from 10.1.3(i) that $S^{-1}I$ is $S^{-1}R$-injective. An appeal to 10.1.11 now completes the proof. □

The behaviour of injective R-modules under fraction formation is used in Matsumura's proof of the following fundamental uniqueness property of the direct sum decompositions described in 10.1.8.

10.1.14 Reminder. (See [35, Theorem 18.5(iii)].) Let I be an injective R-module. By 10.1.8, there is a family $(\mathfrak{p}_\alpha)_{\alpha\in\Lambda}$ of prime ideals of R for which $I \cong \bigoplus_{\alpha\in\Lambda} E(R/\mathfrak{p}_\alpha)$.

Let $\mathfrak{p} \in \operatorname{Spec}(R)$, and let $k(\mathfrak{p}) = R_\mathfrak{p}/\mathfrak{p}R_\mathfrak{p}$, the residue field of the local ring $R_\mathfrak{p}$. Then the cardinality of the set $\{\alpha \in \Lambda : \mathfrak{p}_\alpha = \mathfrak{p}\}$ depends only on I and $\mathfrak{p}$ and not on the particular decomposition of I (as a direct sum of indecomposable injective submodules) chosen; in fact, this cardinality is equal to the vector space dimension $\dim_{k(\mathfrak{p})} \operatorname{Hom}_{R_\mathfrak{p}}(k(\mathfrak{p}), I_\mathfrak{p})$.

10.1.15 Lemma. *Suppose that the R-module M is annihilated by the ideal $\mathfrak{b}$ of R. We can regard M and $(0 :_{E_R(M)} \mathfrak{b})$ as modules over $R/\mathfrak{b}$ in natural ways: when this is done, $(0 :_{E_R(M)} \mathfrak{b}) \cong E_{R/\mathfrak{b}}(M)$.*

Proof. Let $\iota : (0 :_{E_R(M)} \mathfrak{b}) \to E_R(M)$ denote the inclusion map. Let

$$\begin{tikzcd} 0 \arrow[r] & G \arrow[r, "\alpha"] \arrow[d, "\gamma"] & H \\ & (0 :_{E_R(M)} \mathfrak{b}) & \end{tikzcd}$$

be a diagram of $R/\mathfrak{b}$-modules and $R/\mathfrak{b}$-homomorphisms in which the row is exact. We can regard these modules as R-modules by means of the natural homomorphism $R \to R/\mathfrak{b}$, and then α, γ and $\iota \circ \gamma$ become R-homomorphisms. Since $E_R(M)$ is an injective R-module, there exists an R-homomorphism $\beta : H \longrightarrow E_R(M)$ such that $\beta \circ \alpha = \iota \circ \gamma$. However, since $\mathfrak{b}H = 0$, it follows that $\operatorname{Im} \beta \subseteq (0 :_{E_R(M)} \mathfrak{b})$, and, when we regard β as a map from H to $(0 :_{E_R(M)} \mathfrak{b})$, it is an $R/\mathfrak{b}$-homomorphism such that $\beta \circ \alpha = \gamma$.

Thus $(0 :_{E_R(M)} \mathfrak{b})$ is injective as an $R/\mathfrak{b}$-module. It is clear that $(0 :_{E_R(M)} \mathfrak{b})$ is an essential extension of its $R/\mathfrak{b}$-submodule M. □

10.2 Matlis duality

Although there is a treatment of Matlis duality in [35, Theorem 18.6], we are going to present, for the reader's convenience, a different approach to this theory. Our approach makes use of Melkersson's Theorem [36, Theorem 1.3]: we presented this theorem in 7.1.2, and applied it to local cohomology modules in Chapter 7.

We begin by specifying some notation which we shall frequently use during our discussion of Matlis duality.

10.2.1 Notation and Remarks. Suppose that $(R, \mathfrak{m})$ is local. Set $E := E(R/\mathfrak{m})$, the injective envelope of the simple R-module $R/\mathfrak{m}$. As usual, we shall use $\widehat{R}$ to denote the $\mathfrak{m}$-adic completion $\varprojlim_{n \in \mathbb{N}} R/\mathfrak{m}^n$ of R.

We shall use D to denote the exact, contravariant, R-linear functor $\operatorname{Hom}_R(\cdot, E)$ from $\mathscr{C}(R)$ to itself. For each R-module G, we shall refer to $D(G)$ as the *Matlis dual* of G. Note that $D(R)$ is naturally isomorphic to E, and that $D(E) = \operatorname{Hom}_R(E, E)$ is just the R-endomorphism ring of E considered as an R-module in the natural way.

For each R-module G, let

$$\mu_G : G \longrightarrow DD(G) = \mathrm{Hom}_R(\mathrm{Hom}_R(G, E), E)$$

be the natural R-homomorphism for which $(\mu_G(x))(f) = f(x)$ for all $x \in G$ and $f \in \mathrm{Hom}_R(G, E)$.

Note that, as G varies through $\mathscr{C}(R)$, the μ_G constitute a natural transformation μ from the identity functor to the functor DD.

If an R-module M has finite length, then we shall denote that length by $\ell(M)$.

10.2.2 Remarks. Suppose that $(R, \mathfrak{m})$ is local, and use the notation of 10.2.1. Let G be an R-module.

(i) The R-homomorphism μ_G is injective, since if $0 \neq x \in G$, there is an R-homomorphism $f' : Rx \to R/\mathfrak{m}$ for which $f'(rx) = r + \mathfrak{m}$ for all $r \in R$, and the composition of f' and the inclusion map $R/\mathfrak{m} \to E$ can be extended to an $f \in \mathrm{Hom}_R(G, E)$ for which $f(x) \neq 0$.

(ii) The annihilators of G and its Matlis dual $D(G)$ are equal, because the fact that D is an R-linear functor ensures that

$$(0 : G) \subseteq (0 : D(G)) \subseteq (0 : DD(G)),$$

while the injectivity of $\mu_G : G \longrightarrow DD(G)$ (proved in (i) above) ensures that we also have $(0 : DD(G)) \subseteq (0 : G)$.

First we analyse the case when $(R, \mathfrak{m})$ is an Artinian local ring. Recall that, then, an R-module G is Artinian if and only if it is Noetherian, and this is the case if and only if G is finitely generated.

10.2.3 Proposition. *Suppose that $(R, \mathfrak{m})$ is local and Artinian, and use the notation of* 10.2.1. *Then*

(i) $D(R/\mathfrak{m}) \cong R/\mathfrak{m}$ *(as R-modules);*

(ii) *for each finitely generated R-module G (that is, for each R-module G of finite length), the Matlis dual $D(G)$ is also finitely generated and we have $\ell(D(G)) = \ell(G)$;*

(iii) *E is finitely generated (and so Artinian), and $\ell(E) = \ell(R)$;*

(iv) *for each finitely generated R-module G (that is, for each Artinian R-module G), the map $\mu_G : G \longrightarrow DD(G)$ is an isomorphism; and*

(v) *for each $f \in \mathrm{Hom}_R(E, E)$, there is a unique $r_f \in R$ such that $f(x) = r_f x$ for all $x \in E$.*

Note. Condition (v) is equivalent to the statement that the homomorphism $\theta : R \longrightarrow \mathrm{Hom}_R(E, E)$ for which $\theta(r) = r\,\mathrm{Id}_E$, for all $r \in R$, is an isomorphism.

Proof. (i) Let k denote the residue field of R. There is an isomorphism of k-modules

$$D(R/\mathfrak{m}) = \mathrm{Hom}_R(R/\mathfrak{m}, E) \cong (0 :_E \mathfrak{m}).$$

But $(0 :_E \mathfrak{m}) \cong E_k(k)$ by 10.1.15; since every k-module, that is, every vector space over k, is injective, $E_k(k) = k$. The claim follows from this.

(ii) Use induction on length: remember that D is an exact functor.

(iii) This is now immediate from (ii), since $E \cong D(R)$.

(iv) Let G be a finitely generated R-module. Two uses of part (ii) show that $DD(G)$ is also finitely generated and has $\ell(DD(G)) = \ell(G)$; since μ_G is injective by 10.2.2(i), it follows that μ_G must be an isomorphism.

(v) By part (iv), the map $\mu_R : R \to \mathrm{Hom}_R(\mathrm{Hom}_R(R, E), E)$ is an isomorphism. The claim therefore follows from the fact that the composition

$$\theta : R \xrightarrow{\mu_R} \mathrm{Hom}_R(\mathrm{Hom}_R(R, E), E) \xrightarrow{\cong} \mathrm{Hom}_R(E, E),$$

in which the second isomorphism is the obvious natural one, is such that $\theta(r)$, for $r \in R$, is the endomorphism of E given by multiplication by r. □

10.2.4 Exercise. Suppose that $(R, \mathfrak{m})$ is local and Artinian, and set $E := E(R/\mathfrak{m})$. Let L be a submodule of E. Show that L is faithful if and only if $L = E$. (Here is a hint: apply the functor $\mathrm{Hom}_R(\,\cdot\,, E)$ to the canonical exact sequence $0 \longrightarrow L \longrightarrow E \longrightarrow E/L \longrightarrow 0$.)

Proposition 10.2.3 provides the main ingredients of Matlis duality for the (very special!) case of an Artinian local ring. However, as we shall show below, this special case can be used to build up to the general case quickly. We proved in 10.2.3(iii) that, if $(R, \mathfrak{m})$ is local and Artinian, then $E(R/\mathfrak{m})$ is Artinian. We now use Melkersson's Theorem [36, Theorem 1.3] (see 7.1.2) to obtain a much more general statement.

10.2.5 Theorem. *Let $\mathfrak{m}$ be a maximal ideal of R. Then the injective R-module $E(R/\mathfrak{m})$ is Artinian.*

Proof. By 10.1.15, we have $(0 :_{E_R(R/\mathfrak{m})} \mathfrak{m}) \cong E_{R/\mathfrak{m}}(R/\mathfrak{m})$. Since $R/\mathfrak{m}$ is a field, $E_{R/\mathfrak{m}}(R/\mathfrak{m}) = R/\mathfrak{m}$. Hence $(0 :_{E_R(R/\mathfrak{m})} \mathfrak{m})$ is an Artinian R-module. Now $E_R(R/\mathfrak{m})$ is $\mathfrak{m}$-torsion, by 10.1.3(iii), and so it follows from Melkersson's Theorem 7.1.2 that $E_R(R/\mathfrak{m})$ is Artinian. □

10.2.6 Definition. Let M be an R-module. The *socle of* M, denoted by $\mathrm{Soc}(M)$, is defined to be the sum of all simple submodules of M.

10.2.7 Remark. Let A be a non-zero Artinian R-module. Then A is an essential extension of its own socle, because each non-zero submodule B of A must contain a simple submodule (since a minimal member of the set of non-zero submodules of B must be simple).

10.2.8 Corollary (of 10.2.5). *Suppose that $(R, \mathfrak{m})$ is local, and set $E := E(R/\mathfrak{m})$. Let M be an R-module. Then M is Artinian if and only if M is isomorphic to a submodule of E^t, the direct sum of t copies of E, for some $t \in \mathbb{N}$.*

Proof. ($\Leftarrow$) It is clear from 10.2.5 that, for every $t \in \mathbb{N}$, every submodule of E^t is Artinian.

($\Rightarrow$) Assume that M is Artinian. Clearly, we can assume that $M \neq 0$. Now M is an essential extension of $\mathrm{Soc}(M)$, by 10.2.7, and $\mathrm{Soc}(M)$ is an Artinian module annihilated by $\mathfrak{m}$. Thus $\mathrm{Soc}(M)$ has a natural structure as a (finite-dimensional) vector space over $R/\mathfrak{m}$, and so there exists $t \in \mathbb{N}$ such that $\mathrm{Soc}(M) \cong (R/\mathfrak{m})^t$. Now compose this isomorphism with the direct sum of the inclusion maps to obtain an R-monomorphism $f : \mathrm{Soc}(M) \to E^t$; since E^t is injective (by 10.1.3(i)), this f can be extended to an R-homomorphism $f' : M \to E^t$; and f' must also be a monomorphism since M is an essential extension of $\mathrm{Soc}(M)$, by 10.2.7. □

The key to the theory of Matlis duality is the fact that, when $(R, \mathfrak{m})$ is local, $E := E(R/\mathfrak{m})$ has a natural structure as an $\widehat{R}$-module, and, for each $f \in \mathrm{Hom}_R(E, E)$, there is a unique $\widehat{r_f} \in \widehat{R}$ such that $f(x) = \widehat{r_f}x$ for all $x \in E$. We approach this fact next, and, in doing so, we touch on ideas mentioned in Exercise 8.2.4.

10.2.9 Remark. Suppose that $(R, \mathfrak{m})$ is local and that A is an Artinian R-module.

Let $a \in A$. It is immediate from 10.2.8 and 10.1.3(iii) that there exists $t \in \mathbb{N}$ such that $\mathfrak{m}^t a = 0$. (In fact, one can prove this in a much more elementary manner: if $a \neq 0$, then, since the R-module Ra is Artinian, the ring $R/(0 : a)$ is Artinian and local, and so its maximal ideal is nilpotent.) Let, with an obvious notation,

$$\widehat{r} = (r_n + \mathfrak{m}^n)_{n \in \mathbb{N}} = (r'_n + \mathfrak{m}^n)_{n \in \mathbb{N}} \in \varprojlim_{n \in \mathbb{N}} R/\mathfrak{m}^n = \widehat{R},$$

so that $r_n - r'_n \in \mathfrak{m}^n$ for all $n \in \mathbb{N}$ and $r_{n+h} - r_n \in \mathfrak{m}^n$ for all $n, h \in \mathbb{N}$. Then $r_{t+h}a = r_t a = r'_t a = r'_{t+h}a$ for all $h \in \mathbb{N}$. It is straightforward to check that A

can be given the structure of an $\widehat{R}$-module such that, with the above notation, $\widehat{r}a = r_t a$. Note that, if we regard this $\widehat{R}$-module as an R-module by means of the natural ring homomorphism $R \to \widehat{R}$, then we recover the original R-module structure on A; note also that a subset of A is an R-submodule if and only if it is an $\widehat{R}$-submodule.

10.2.10 ♯Exercise. Suppose that $(R, \mathfrak{m})$ is local, and set $E := E(R/\mathfrak{m})$. By 10.2.5, the R-module E is Artinian; therefore, by 10.2.9, it has a natural structure as an $\widehat{R}$-module. Prove that there is an $\widehat{R}$-isomorphism $E(R/\mathfrak{m}) \cong E_{\widehat{R}}(\widehat{R}/\widehat{\mathfrak{m}})$, where $\widehat{\mathfrak{m}}$ denotes the maximal ideal of $\widehat{R}$.

We are now able to prove the key result for Matlis duality that we mentioned just before 10.2.9.

10.2.11 Theorem. *Suppose that $(R, \mathfrak{m})$ is local, and set $E := E(R/\mathfrak{m})$. By 10.2.5, the R-module E is Artinian; therefore, by 10.2.9, it has a natural structure as an $\widehat{R}$-module.*

The natural R-homomorphism $\theta : \widehat{R} \longrightarrow \mathrm{Hom}_R(E, E)$ for which $\theta(\widehat{r}) = \widehat{r}\,\mathrm{Id}_E$ for all $\widehat{r} \in \widehat{R}$ is an isomorphism. In other words, for each $f \in \mathrm{Hom}_R(E, E)$, there is a unique $\widehat{r}_f \in \widehat{R}$ such that $f(x) = \widehat{r}_f x$ for all $x \in E$.

Proof. For each $n \in \mathbb{N}$, set $E_n := (0 :_E \mathfrak{m}^n)$. Let $f \in \mathrm{Hom}_R(E, E)$; let $t \in \mathbb{N}$. Of course, $R/\mathfrak{m}$ is annihilated by $\mathfrak{m}^t$. By 10.1.15, there is an isomorphism of $R/\mathfrak{m}^t$-modules $E_t \cong E_{R/\mathfrak{m}^t}((R/\mathfrak{m}^t)/(\mathfrak{m}/\mathfrak{m}^t))$. Now $f(E_t) \subseteq E_t$, and, of course, $R/\mathfrak{m}^t$ is an Artinian local ring. Therefore, by 10.2.3(v), there exists $r_t \in R$ such that $f(e) = r_t e$ for all $e \in E_t$, and, moreover, if r'_t is any other element of R such that $f(e) = r'_t e$ for all $e \in E_t$, then the uniqueness aspect of 10.2.3(v) ensures that $r_t + \mathfrak{m}^t = r'_t + \mathfrak{m}^t$, that is, $r_t - r'_t \in \mathfrak{m}^t$.

We can proceed as above for each $t \in \mathbb{N}$, and so construct a uniquely determined sequence $(r_n + \mathfrak{m}^n)_{n \in \mathbb{N}} \in \prod_{n \in \mathbb{N}} R/\mathfrak{m}^n$ with the property that, for every $n \in \mathbb{N}$, we have $f(e) = r_n e$ for all $e \in E_n$. Furthermore, for $n, h \in \mathbb{N}$, we have $E_n \subseteq E_{n+h}$, and so, since $f(e) = r_n e = r_{n+h} e$ for all $e \in E_n$, it follows from the immediately preceding paragraph in this proof that $r_n - r_{n+h} \in \mathfrak{m}^n$.

We have therefore found a uniquely determined sequence

$$(r_n + \mathfrak{m}^n)_{n \in \mathbb{N}} \in \varprojlim_{n \in \mathbb{N}} R/\mathfrak{m}^n = \widehat{R}$$

such that, for every $n \in \mathbb{N}$, we have $f(e) = r_n e$ for all $e \in E_n$. Since $E = \bigcup_{n \in \mathbb{N}} E_n$ by 10.1.3(iii), it follows that there is exactly one $\widehat{r} \in \widehat{R}$ such that $f(x) = \widehat{r}x$ for all $x \in E$. □

We are now able to present the main aspects of Matlis duality over a complete local ring.

10.2.12 Matlis Duality Theorem. *Suppose that $(R, \mathfrak{m})$ is local and complete, and use the notation of* 10.2.1. *(Thus $E := E(R/\mathfrak{m})$ and $D := \mathrm{Hom}_R(\,\cdot\,, E)$.)*

(i) *For each $f \in \mathrm{Hom}_R(E, E)$, there is a unique $r_f \in R$ such that $f(x) = r_f x$ for all $x \in E$.*

(ii) *Whenever N is a finitely generated R-module, the natural homomorphism $\mu_N : N \longrightarrow DD(N)$ is an isomorphism and $D(N)$ is Artinian.*

(iii) *Whenever A is an Artinian R-module, the natural homomorphism $\mu_A : A \longrightarrow DD(A)$ is an isomorphism and $D(A)$ is Noetherian.*

Proof. (i) This is immediate from Theorem 10.2.11.

(ii) The composition

$$\theta : R \xrightarrow{\mu_R} \mathrm{Hom}_R(\mathrm{Hom}_R(R, E), E) \xrightarrow{\cong} \mathrm{Hom}_R(E, E),$$

in which the second map is the obvious natural isomorphism, is such that $\theta(r) = r\,\mathrm{Id}_E$ for all $r \in R$. We have seen in part (i) that θ is an isomorphism; therefore μ_R is an isomorphism.

The identity functor and DD are both additive, and the result of application of an additive functor to a split short exact sequence is again a split short exact sequence; also, μ is a natural transformation of functors. We can therefore deduce, by induction on rank, that μ_F is an isomorphism whenever F is a finitely generated free R-module.

Let N be an arbitrary finitely generated R-module. Then N can be included in an exact sequence $F_1 \longrightarrow F_0 \longrightarrow N \longrightarrow 0$ in which F_1 and F_0 are finitely generated free R-modules. Since the functor DD is additive and exact, and μ is a natural transformation of functors, the above exact sequence induces a commutative diagram

$$\begin{tikzcd}
F_1 \arrow[r] \arrow[d, "\cong"', "\mu_{F_1}"] & F_0 \arrow[r] \arrow[d, "\cong"', "\mu_{F_0}"] & N \arrow[r] \arrow[d, "\mu_N"] & 0 \arrow[r] \arrow[d, equal] & 0 \arrow[d, equal] \\
DD(F_1) \arrow[r] & DD(F_0) \arrow[r] & DD(N) \arrow[r] & 0 \arrow[r] & 0
\end{tikzcd}$$

with exact rows. It therefore follows from the Five Lemma that μ_N is an isomorphism.

Finally, application of the contravariant, exact functor D to the exact sequence $F_0 \longrightarrow N \longrightarrow 0$ shows that $D(N)$ is isomorphic to a submodule of

$D(F_0)$; since $D(F_0)$ is isomorphic to a direct sum of finitely many copies of $D(R)$ and $D(R) \cong E$, it follows from 10.2.8 that $D(N)$ is Artinian.

(iii) The composition

$$E \xrightarrow{\mu_E} \mathrm{Hom}_R(\mathrm{Hom}_R(E,E),E) \xrightarrow[\cong]{\mathrm{Hom}_R(\theta,\mathrm{Id}_E)} \mathrm{Hom}_R(R,E) \xrightarrow{\cong} E,$$

where θ is the isomorphism used in the proof of part (ii) above, is just the identity map; therefore μ_E is an isomorphism. We can now use the additivity of DD, and the natural transformation μ, to deduce, by induction on t, that μ_{E^t} is an isomorphism for all $t \in \mathbb{N}$.

Let A be an arbitrary Artinian R-module. Two uses of Corollary 10.2.8 show that there is an exact sequence $0 \longrightarrow A \longrightarrow E^{n_0} \longrightarrow E^{n_1}$ for suitable positive integers n_0 and n_1. We can now use the exactness of the functor DD, together with the natural transformation μ, as we did in the above proof of part (ii), to obtain from this exact sequence a commutative diagram with exact rows, and another application of the Five Lemma will yield the desired conclusion that μ_A is an isomorphism.

Finally, application of the contravariant, exact functor D to the exact sequence $0 \longrightarrow A \longrightarrow E^{n_0}$ shows that $D(A)$ is a homomorphic image of $D(E^{n_0}) \cong (D(E))^{n_0}$; since $\theta : R \to D(E)$ is an isomorphism, $D(A)$ is a homomorphic image of a finitely generated free R-module, and so is Noetherian. □

10.2.13 ♯Exercise. Suppose that $(R, \mathfrak{m})$ is local and complete, and use the notation of 10.2.1. Let G be an R-module of finite length, so that, by the Matlis Duality Theorem 10.2.12, the Matlis dual $D(G)$ also has finite length. Prove that $\ell(D(G)) = \ell(G)$.

10.2.14 Remark. Suppose that $(R, \mathfrak{m})$ is local and complete, and use the notation of 10.2.1.

The Matlis Duality Theorem 10.2.12 allows statements about Noetherian R-modules to be translated into 'dual' statements about Artinian R-modules, and *vice versa*. For example, it shows that every Noetherian R-module is isomorphic to the Matlis dual of an Artinian R-module, and that every Artinian R-module is isomorphic to the Matlis dual of a Noetherian R-module.

To give a sample of this type of 'translation', let N be a Noetherian R-module, so that $D(N)$ is an Artinian R-module: we can use the Matlis Duality Theorem 10.2.12 to show quickly that $\mathrm{Att}\, D(N) = \mathrm{Ass}\, N$, as follows. Let $\mathfrak{p} \in \mathrm{Spec}(R)$. Then $\mathfrak{p} \in \mathrm{Ass}\, N$ if and only if N has a submodule with annihilator equal to $\mathfrak{p}$. Now D is an exact, contravariant functor and $DD(N) \cong N$; also, by

10.2.2(ii), the annihilators of an R-module M and its Matlis dual $D(M)$ are equal. Therefore N has a submodule with annihilator equal to $\mathfrak{p}$ if and only if $D(N)$ has a homomorphic image with annihilator equal to $\mathfrak{p}$; and, by 7.2.5, this is the case if and only if $\mathfrak{p} \in \operatorname{Att} D(N)$.

10.2.15 Exercise. Suppose that $(R, \mathfrak{m})$ is local and complete, and use the notation of 10.2.1.

Let N be a Noetherian R-module and let A be an Artinian R-module; let $n \in \mathbb{N}_0$ and $h \in \mathbb{N}$.

(i) Prove that $D(\mathfrak{a}^n N/\mathfrak{a}^{n+h}N) \cong (0 :_{D(N)} \mathfrak{a}^{n+h})/(0 :_{D(N)} \mathfrak{a}^n)$.

(ii) Prove that $D\left((0 :_A \mathfrak{a}^{n+h})/(0 :_A \mathfrak{a}^n)\right) \cong \mathfrak{a}^n D(A)/\mathfrak{a}^{n+h}D(A)$.

(iii) Prove that $\operatorname{Att}(0 :_A \mathfrak{a}^h) = \operatorname{Ass} D(A)/\mathfrak{a}^h D(A)$.

So far, we have restricted our account of Matlis duality to situations where the underlying local ring is complete. However, it is possible to obtain from Theorem 10.2.11 a satisfactory partial result which is valid over any local ring. We include this because we shall find a corollary of it useful in our applications of the local duality theory developed in Chapter 11. We shall need the following technical lemma.

10.2.16 Lemma. *Let M, I, J be R-modules.*

(i) *There exists a (unique) R-homomorphism*

$$\xi_{M,I,J} : M \otimes_R \operatorname{Hom}_R(I, J) \longrightarrow \operatorname{Hom}_R(\operatorname{Hom}_R(M, I), J)$$

such that, for $m \in M$, $f \in \operatorname{Hom}_R(I, J)$ and $g \in \operatorname{Hom}_R(M, I)$, we have $\left(\xi_{M,I,J}(m \otimes f)\right)(g) = f(g(m))$. Furthermore, as M, I, J vary through the category $\mathscr{C}(R)$, the $\xi_{M,I,J}$ constitute a natural transformation of functors

$$\xi_{\bullet,\bullet,\bullet} : (\bullet) \otimes_R \operatorname{Hom}_R(\bullet, \bullet) \longrightarrow \operatorname{Hom}_R(\operatorname{Hom}_R(\bullet, \bullet), \bullet)$$

(from $\mathscr{C}(R) \times \mathscr{C}(R) \times \mathscr{C}(R)$ to $\mathscr{C}(R)$).

(ii) *If J is injective, then $\xi_{M,I,J}$ is an isomorphism whenever M is finitely generated.*

Proof. (i) This is straightforward and left to the reader.

(ii) It will be convenient to use V to denote $(\bullet) \otimes_R \operatorname{Hom}_R(I, J)$, to use W to denote the functor $\operatorname{Hom}_R(\operatorname{Hom}_R(\bullet, I), J)$, and to use $\zeta_\bullet$ to denote $\xi_{\bullet,I,J}$.

The composition $\operatorname{Hom}_R(I, J) \xrightarrow{\cong} V(R) \xrightarrow{\zeta_R} W(R) \xrightarrow{\cong} \operatorname{Hom}_R(I, J)$, in which the first and last isomorphisms are the obvious natural ones, is just the identity map; hence $\zeta_R = \xi_{R,I,J}$ is an isomorphism.

The functors V and W are both additive, and ζ is a natural transformation

of functors. We can therefore deduce, by induction on rank, that ζ_F is an isomorphism whenever F is a finitely generated free R-module.

Let M be an arbitrary finitely generated R-module. Then M can be included in an exact sequence $F_1 \longrightarrow F_0 \longrightarrow M \longrightarrow 0$ in which F_1 and F_0 are finitely generated free R-modules. Of course the functor V is right exact; since J is injective, the functor W is also right exact; therefore, since ζ is a natural transformation of functors, the above exact sequence induces a commutative diagram

$$\begin{tikzcd}
V(F_1) \arrow[r] \arrow[d, "\zeta_{F_1}", "\cong"'] & V(F_0) \arrow[r] \arrow[d, "\zeta_{F_0}", "\cong"'] & V(M) \arrow[r] \arrow[d, "\zeta_M"] & 0 \arrow[r] \arrow[d, equal] & 0 \arrow[d, equal] \\
W(F_1) \arrow[r] & W(F_0) \arrow[r] & W(M) \arrow[r] & 0 \arrow[r] & 0
\end{tikzcd}$$

with exact rows. It thus follows from the Five Lemma that ζ_M is an isomorphism. □

10.2.17 ♯Exercise. Supply a proof for part (i) of Lemma 10.2.16.

10.2.18 Remarks. Suppose that $(R, \mathfrak{m})$ is local (but not necessarily complete), and use the notation of 10.2.1. (Thus $E := E(R/\mathfrak{m})$ and $D := \mathrm{Hom}_R(\cdot, E)$.) Let $\widehat{\mathfrak{m}}$ denote the maximal ideal of $\widehat{R}$.

(i) By 10.2.9, an Artinian R-module A can be given a natural structure as an $\widehat{R}$-module such that

(a) for each $a \in A$ and each $\widehat{r} \in \widehat{R}$, there exists $r \in R$ with $\widehat{r}a = ra$, and

(b) if we regard this $\widehat{R}$-module as an R-module by means of the natural ring homomorphism $R \to \widehat{R}$, then we recover the original R-module structure on A.

It follows from (a) that A is an Artinian $\widehat{R}$-module.

(ii) Let A' be an Artinian $\widehat{R}$-module. Let $a' \in A'$. By 10.2.9, there exists $t \in \mathbb{N}$ such that a' is annihilated by $\widehat{\mathfrak{m}}^t = \mathfrak{m}^t\widehat{R}$. Now let $\widehat{r} \in \widehat{R}$. Then there exists $r \in R$ such that $\widehat{r} - r \in \mathfrak{m}^t\widehat{R}$. Therefore $\widehat{r}a' = ra'$, so that, when A' is regarded as an R-module by means of the natural ring homomorphism $R \to \widehat{R}$, every R-submodule of A' is automatically an $\widehat{R}$-submodule, and therefore A' is an Artinian R-module. If we then regard the Artinian R-module A' as an $\widehat{R}$-module using the method of 10.2.9, we recover the original $\widehat{R}$-module structure on A'.

(iii) Thus, by parts (i) and (ii), the category of all Artinian R-modules and all R-homomorphisms between them is equivalent to the category of all Artinian

$\widehat{R}$-modules and all $\widehat{R}$-homomorphisms between them; in fact, we can regard these two categories as essentially the same.

(iv) Let ν be the natural transformation from the identity functor to the functor $(\,\cdot\,) \otimes_R \mathrm{Hom}_R(E,E)$ (from $\mathscr{C}(R)$ to itself) for which $\nu_M(m) = m \otimes \mathrm{Id}_E$ for each R-module M and each $m \in M$.

Let N be a finitely generated R-module. Then, since N is a homomorphic image of R^h for some $h \in \mathbb{N}$, the Matlis dual $D(N)$ is isomorphic to a submodule of $D(R^h)$; since $D(R^h) \cong D(R)^h \cong E^h$, we deduce from 10.2.8 that $D(N)$ is Artinian. Furthermore, it is straightforward to check that the diagram

$$\begin{tikzcd} N \arrow[r, "\nu_N"] \arrow[dr, "\mu_N"'] & N \otimes_R \mathrm{Hom}_R(E,E) \arrow[d, "\xi_{N,E,E}"] \\ & DD(N) \end{tikzcd}$$

where $\xi_{N,E,E}$ is the isomorphism given by 10.2.16, commutes. By 10.2.2(i), the natural map μ_N is injective; by 10.2.11, $\mathrm{Hom}_R(E,E) \cong \widehat{R}$ under an isomorphism which maps Id_E to $1_{\widehat{R}}$, and so, speaking loosely, we can regard the duality map $\mu_N : N \longrightarrow DD(N)$ as the embedding of N into its completion.

(v) Let A be an Artinian R-module. Part (i) shows that A can be regarded as an Artinian $\widehat{R}$-module in a natural way; by 10.2.5, the R-module E is Artinian, and so it too can be regarded as an Artinian $\widehat{R}$-module in a natural way; by 10.2.10, there is an $\widehat{R}$-isomorphism $E(R/\mathfrak{m}) \cong E_{\widehat{R}}(\widehat{R}/\widehat{\mathfrak{m}})$. Also, $D(A) = \mathrm{Hom}_R(A,E) = \mathrm{Hom}_{\widehat{R}}(A,E)$, by part (i) (and 10.2.9), and so $D(A)$ has a natural (unambiguous) $\widehat{R}$-module structure. It follows from these observations that, as $\widehat{R}$-module, $D(A) \cong \mathrm{Hom}_{\widehat{R}}(A, E_{\widehat{R}}(\widehat{R}/\widehat{\mathfrak{m}}))$; the Matlis Duality Theorem 10.2.12 shows that this is a Noetherian $\widehat{R}$-module.

We now summarize some of the main points of 10.2.18 in a Partial Matlis Duality Theorem.

10.2.19 Partial Matlis Duality Theorem. *Suppose that $(R,\mathfrak{m})$ is local (but not necessarily complete), and use the notation of* 10.2.1. *(Thus $E := E(R/\mathfrak{m})$ and $D := \mathrm{Hom}_R(\cdot, E)$.) By* 10.2.5 *and* 10.2.9, *the R-module E has a natural structure as an $\widehat{R}$-module. Let $\widehat{\mathfrak{m}}$ denote the maximal ideal of $\widehat{R}$.*

(i) *By* 10.2.11, *for each $f \in \mathrm{Hom}_R(E,E)$, there is a unique $\widehat{r_f} \in \widehat{R}$ such that $f(x) = \widehat{r_f}x$ for all $x \in E$.*

(ii) *Whenever N is a finitely generated R-module, the natural homomorphism*

$\mu_N : N \longrightarrow DD(N)$ is injective, $D(N)$ is Artinian, and there is a commutative diagram

$$\begin{tikzcd} N \arrow[r] \arrow[dr, "\mu_N"'] & N \otimes_R \widehat{R} \arrow[d, "\cong"] \\ & DD(N) \end{tikzcd},$$

in which the horizontal homomorphism is the canonical one.

(iii) *Whenever A is an Artinian R-module, it has a natural structure as an (Artinian) $\widehat{R}$-module, and $D(A)$ is a Noetherian $\widehat{R}$-module $\widehat{R}$-isomorphic to the Matlis dual of A over $\widehat{R}$.*

Proof. All the claims were explained in 10.2.18. □

We show how the Partial Matlis Duality Theorem 10.2.19 can be used to extend 10.2.14 to the case where the underlying local ring is not necessarily complete.

10.2.20 Corollary. *Suppose that $(R, \mathfrak{m})$ is local (but not necessarily complete), and use the notation of* 10.2.1.

Let N be a Noetherian R-module, so that $D(N)$ is an Artinian R-module by 10.2.19(ii), *and we can form the set* $\operatorname{Att} D(N)$. *Then* $\operatorname{Att} D(N) = \operatorname{Ass} N$.

Proof. Let $\mathfrak{p} \in \operatorname{Ass} N$, so that N has a submodule B with annihilator equal to $\mathfrak{p}$. Now D is an exact, contravariant functor; also, by 10.2.2(ii), the annihilators of an R-module M and its Matlis dual $D(M)$ are equal. Therefore $D(N)$ has a homomorphic image $D(B)$ with annihilator equal to $\mathfrak{p}$, and so $\mathfrak{p} \in \operatorname{Att} D(N)$ by 7.2.5.

Conversely, let $\mathfrak{p} \in \operatorname{Att}_R D(N)$, so that $D(N)$ has an R-homomorphic image A with annihilator equal to $\mathfrak{p}$, by 7.2.5. Application of D and another use of 10.2.2(ii) now show that $DD(N)$ has an R-submodule with annihilator equal to $\mathfrak{p}$. By 10.2.19(ii), there is an R-isomorphism $DD(N) \cong N \otimes_R \widehat{R}$. Therefore there exists an R-submodule C of $N \otimes_R \widehat{R}$ with $(0 :_R C) = \mathfrak{p}$.

Let $C\widehat{R}$ be the $\widehat{R}$-submodule of $N \otimes_R \widehat{R}$ generated by C. Note that $C\widehat{R}$ is a finitely generated $\widehat{R}$-module, and that

$$(0 :_{\widehat{R}} C\widehat{R}) \cap R = (0 :_R C\widehat{R}) = (0 :_R C) = \mathfrak{p}.$$

It follows that there exists $\mathfrak{P} \in \operatorname{Ass}_{\widehat{R}}(C\widehat{R})$ such that $\mathfrak{P} \cap R = \mathfrak{p}$. Of course,

$\mathfrak{P} \in \operatorname{Ass}_{\widehat{R}}(N \otimes_R \widehat{R})$. We can now use [35, Theorem 23.2] to deduce that $\mathfrak{p} \in \operatorname{Ass}_R N$. □

10.2.21 Exercise. Suppose that $(R, \mathfrak{m})$ is local and complete, and use the notation of 10.2.1. Assume that $\dim R > 0$. Prove that there exists an R-module G which is neither Noetherian nor Artinian but for which $\mu_G : G \longrightarrow DD(G)$ is an isomorphism.

11

Local duality

Suppose, temporarily, that $(R, \mathfrak{m})$ is local, and that M is a finitely generated R-module. In Theorem 7.1.3, we showed that $H^i_{\mathfrak{m}}(M)$ is Artinian for all $i \in \mathbb{N}_0$. When R is complete, Matlis duality (see 10.2.12) provides a very satisfactory correspondence between the category of Artinian R-modules and the category of Noetherian R-modules, and so it is natural to ask, in this situation, which Noetherian R-modules correspond to the local cohomology modules $H^i_{\mathfrak{m}}(M)$ $(i \in \mathbb{N}_0)$. Local duality provides an answer to this question, and also provides a fundamental tool for the study of local cohomology modules with respect to the maximal ideal of a local ring.

For a Gorenstein local ring $(R, \mathfrak{m})$ of dimension n, the Local Duality Theorem tells us that, if M is a finitely generated R-module, then, for each $i \in \mathbb{N}_0$, the local cohomology module $H^i_{\mathfrak{m}}(M)$ is the Matlis dual of the finitely generated R-module $\operatorname{Ext}^{n-i}_R(M, R)$, and, as R is Gorenstein, quite a lot is known about these 'Ext' modules. The Independence Theorem 4.2.1 then allows us to extend the Local Duality Theorem to any local ring which is a homomorphic image of a Gorenstein local ring, and the class of such local rings includes the local rings of points on affine and quasi-affine varieties, and, by the structure theorems for complete local rings (see [35, Theorem 29.4(ii)], for example), all complete local rings. Furthermore, the special case of the Local Duality Theorem for a Cohen-Macaulay local ring R which is a homomorphic image of a Gorenstein local ring can be formulated in terms of the canonical module ω_R for R.

In the final section of the chapter, we shall use local duality to explore again certain results established earlier in the book.

11.1 Minimal injective resolutions

The work in this chapter will involve knowledge of the structure of a minimal injective resolution of a Gorenstein local ring; we begin by reviewing the concept of minimal injective resolution.

11.1.1 Definition. Let M be an R-module. A *minimal injective resolution of* M is an injective resolution

$$I^\bullet : 0 \longrightarrow I^0 \xrightarrow{d^0} I^1 \longrightarrow \cdots \longrightarrow I^i \xrightarrow{d^i} I^{i+1} \longrightarrow \cdots$$

of M such that I^n is an essential extension of $\operatorname{Ker} d^n$ for every $n \in \mathbb{N}_0$.

11.1.2 ♯Exercise. Let M be an R-module. Prove that M has a minimal injective resolution. (Start with the monomorphism $M \longrightarrow E(M)$, and, successively, take the injective envelope of the cokernel of the last map you have constructed.)

Suppose that, with the notation of 11.1.1, the injective resolution $I^\bullet$ of M is minimal. There is an augmentation R-homomorphism $\alpha : M \to I^0$ such that the sequence

$$0 \longrightarrow M \xrightarrow{\alpha} I^0 \xrightarrow{d^0} I^1 \longrightarrow \cdots \longrightarrow I^i \xrightarrow{d^i} I^{i+1} \longrightarrow \cdots$$

is exact. Since I^0 is an essential extension of $\operatorname{Ker} d^0$ and $\operatorname{Ker} d^0 = \operatorname{Im} \alpha \cong M$, it follows that $I^0 \cong E(M)$, the injective envelope of M, and so is uniquely determined up to isomorphism by M (see 10.1.1(v)). Actually, all the terms in a minimal injective resolution of M are uniquely determined up to isomorphism: this is the subject of the next exercise.

11.1.3 ♯Exercise. Let M be an R-module. Let

$$I^\bullet : 0 \longrightarrow I^0 \xrightarrow{d^0} I^1 \longrightarrow \cdots \longrightarrow I^i \xrightarrow{d^i} I^{i+1} \longrightarrow \cdots$$

and

$$J^\bullet : 0 \longrightarrow J^0 \xrightarrow{\delta^0} J^1 \longrightarrow \cdots \longrightarrow J^i \xrightarrow{\delta^i} J^{i+1} \longrightarrow \cdots$$

be minimal injective resolutions of M, so that there are R-homomorphisms $\alpha : M \to I^0$ and $\beta : M \to J^0$ such that the sequences

$$0 \longrightarrow M \xrightarrow{\alpha} I^0 \xrightarrow{d^0} I^1 \longrightarrow \cdots \longrightarrow I^i \xrightarrow{d^i} I^{i+1} \longrightarrow \cdots$$

and

$$0 \longrightarrow M \xrightarrow{\beta} J^0 \xrightarrow{\delta^0} J^1 \longrightarrow \cdots \longrightarrow J^i \xrightarrow{\delta^i} J^{i+1} \longrightarrow \cdots$$

are both exact. Show that there is an isomorphism of complexes

$$\phi^\bullet = \left(\phi^i\right)_{i\in\mathbb{N}_0} : I^\bullet \longrightarrow J^\bullet$$

such that the diagram

$$\begin{tikzcd} M \arrow[r, "\alpha"] \arrow[d, equal] & I^0 \arrow[d, "\phi^0"] \\ M \arrow[r, "\beta"] & J^0 \end{tikzcd}$$

commutes.

11.1.4 Notation and Definition. Let M be an R-module. By 11.1.3, for each $i \in \mathbb{N}_0$, the i-th term in a minimal injective resolution of M is uniquely determined, up to isomorphism, by M, and is independent of the choice of minimal injective resolution of M. We denote this i-th term by $E^i(M)$, or by $E^i_R(M)$ when it is desirable to emphasize the underlying ring.

Observe that $E^0(M) \cong E(M)$, the injective envelope of M.

For each $i \in \mathbb{N}_0$ and each $\mathfrak{p} \in \operatorname{Spec}(R)$, we define the *i-th Bass number of M with respect to* $\mathfrak{p}$ as follows. By 10.1.8, there is a family $(\mathfrak{p}_\alpha)_{\alpha\in\Lambda}$ of prime ideals of R for which $E^i(M) \cong \bigoplus_{\alpha\in\Lambda} E(R/\mathfrak{p}_\alpha)$. By 10.1.14 (see [35, Theorem 18.5(iii)]), the cardinality of the set $\{\alpha \in \Lambda : \mathfrak{p}_\alpha = \mathfrak{p}\}$ depends only on $E^i(M)$ and $\mathfrak{p}$ (and therefore only on M and $\mathfrak{p}$) and not on the particular decomposition of $E^i(M)$ (as a direct sum of indecomposable injective submodules) chosen. This cardinality is denoted by $\mu^i(\mathfrak{p}, M)$, and is referred to as the i-th Bass number of M with respect to $\mathfrak{p}$. Symbolically, we write

$$E^i(M) \cong \bigoplus_{\mathfrak{p}\in\operatorname{Spec}(R)} \mu^i(\mathfrak{p}, M)E(R/\mathfrak{p}),$$

where $\bigoplus \mu E$ denotes the direct sum of μ copies of E.

In the notation of 11.1.4, we can already give a description of $\mu^0(\mathfrak{p}, M)$, since it follows from 10.1.14 (and the fact that $E^0(M) \cong E(M)$) that

$$\mu^0(\mathfrak{p}, M) = \dim_{k(\mathfrak{p})} \operatorname{Hom}_{R_\mathfrak{p}}(k(\mathfrak{p}), E(M)_\mathfrak{p}),$$

where $k(\mathfrak{p}) = R_\mathfrak{p}/\mathfrak{p}R_\mathfrak{p}$, the residue field of the local ring $R_\mathfrak{p}$. In fact, a refinement of this, and analogues for the higher Bass numbers, are available: we shall refer to Matsumura [35, Theorem 18.7] for these results, although we first give, for the reader's convenience, a slight refinement of one of Matsumura's lemmas.

11.1.5 Lemma. (See [35, §18, Lemma 6].) *Let $f : L \to M$ be a homomorphism of R-modules such that M is an essential extension of* $\operatorname{Im} f$. *Let S be a multiplicatively closed subset of R. Then $S^{-1}M$ is an essential extension of its submodule* $\operatorname{Im}(S^{-1}f)$ *(where $S^{-1}f : S^{-1}L \to S^{-1}M$ is the homomorphism induced by f).*

Proof. Suppose that x/s, where $x \in M$ and $s \in S$, is a non-zero element of $S^{-1}M$. Then $S^{-1}(Rx)$ is a non-zero submodule of $S^{-1}M$, and so there exists $\mathfrak{p} \in \operatorname{Ass}(Rx)$ such that $\mathfrak{p} \cap S = \emptyset$. Also, there exists $r \in R$ such that $(0 : rx) = \mathfrak{p}$.

Since M is an essential extension of $\operatorname{Im} f$, there exists $r' \in R$ such that $0 \neq r'rx = f(y)$ for some $y \in L$. Now $(0 : r'rx) = \mathfrak{p} \subseteq R \setminus S$, and so

$$0 \neq \frac{r'r}{1}\frac{x}{s} = \frac{r'rx}{s} = \frac{f(y)}{s} = (S^{-1}f)\left(\frac{y}{s}\right) \in \operatorname{Im}(S^{-1}f). \ \square$$

11.1.6 Corollary. *Let M be an R-module, and let*

$$I^{\bullet} : 0 \longrightarrow I^0 \xrightarrow{d^0} I^1 \longrightarrow \cdots \longrightarrow I^i \xrightarrow{d^i} I^{i+1} \longrightarrow \cdots$$

be a minimal injective resolution of M. Let S be a multiplicatively closed subset of R. Then

$$0 \longrightarrow S^{-1}(I^0) \longrightarrow \cdots \longrightarrow S^{-1}(I^i) \xrightarrow{S^{-1}(d^i)} S^{-1}(I^{i+1}) \longrightarrow \cdots$$

is a minimal injective resolution of the $S^{-1}R$-module $S^{-1}M$.

Thus, for all $i \in \mathbb{N}_0$,

(i) *$S^{-1}(E_R^i(M)) \cong E_{S^{-1}R}^i(S^{-1}M)$ (as $S^{-1}R$-modules); and*

(ii) *$\mu^i(S^{-1}\mathfrak{p}, S^{-1}M) = \mu^i(\mathfrak{p}, M)$ for all $\mathfrak{p} \in \operatorname{Spec}(R)$ with $\mathfrak{p} \cap S = \emptyset$.*

Proof. All the claims follow easily from 10.1.13 and 11.1.5. $\square$

11.1.7 Theorem [35, Theorem 18.7]. *Let M be an R-module. For each $i \in \mathbb{N}_0$ and each $\mathfrak{p} \in \operatorname{Spec}(R)$, the i-th Bass number $\mu^i(\mathfrak{p}, M)$ is given by*

$$\mu^i(\mathfrak{p}, M) = \dim_{k(\mathfrak{p})} \operatorname{Ext}^i_{R_\mathfrak{p}}(k(\mathfrak{p}), M_\mathfrak{p}) = \dim_{k(\mathfrak{p})} \left(\operatorname{Ext}^i_R(R/\mathfrak{p}, M)\right)_\mathfrak{p},$$

where $k(\mathfrak{p}) = R_\mathfrak{p}/\mathfrak{p}R_\mathfrak{p}$, the residue field of the local ring $R_\mathfrak{p}$. $\square$

We have not explained the use of the word 'minimal' in the phrase 'minimal injective resolution'. We do this next.

11.1.8 Conventions. We shall denote the injective dimension of an R-module M by $\operatorname{inj\,dim} M$ or, occasionally, by $\operatorname{inj\,dim}_R M$ if it is desirable to specify the underlying ring concerned. We adopt the convention that a zero module has injective dimension $-\infty$.

11.1.9 Remark. Let M be an R-module, and let $n \in \mathbb{N}_0$.

(i) If $E^n(M) = 0$, then $E^{n+i}(M) = 0$ for all $i \in \mathbb{N}$, and, consequently, $\operatorname{inj\,dim} M < n$.

(ii) Conversely, if $\operatorname{inj\,dim} M < n$, then, for all $\mathfrak{p} \in \operatorname{Spec}(R)$, we have $\operatorname{Ext}^n_R(R/\mathfrak{p}, M) = 0$, so that $\mu^n(\mathfrak{p}, M) = 0$ by 11.1.7; hence $E^n(M) = 0$.

11.1.10 Exercise. Let M be an R-module, and let

$$I^\bullet : 0 \longrightarrow I^0 \xrightarrow{d^0} I^1 \longrightarrow \cdots \longrightarrow I^i \xrightarrow{d^i} I^{i+1} \longrightarrow \cdots$$

be a minimal injective resolution of M and

$$J^\bullet : 0 \longrightarrow J^0 \xrightarrow{\delta^0} J^1 \longrightarrow \cdots \longrightarrow J^i \xrightarrow{\delta^i} J^{i+1} \longrightarrow \cdots$$

be an arbitrary injective resolution of M. Prove that there is a chain map of complexes

$$\phi^\bullet = (\phi^i)_{i \in \mathbb{N}_0} : I^\bullet \longrightarrow J^\bullet$$

such that the diagram

$$\begin{tikzcd} M \arrow[r, "\alpha"] \arrow[d, equal] & I^0 \arrow[d, "\phi^0"] \\ M \arrow[r, "\beta"] & J^0 \end{tikzcd}$$

(in which the horizontal maps are the appropriate augmentation homomorphisms) commutes, and which is such that ϕ^i is a monomorphism for all $i \in \mathbb{N}_0$. Deduce that, for each $i \in \mathbb{N}_0$, the i-th term J^i has a direct summand isomorphic to $E^i(M)$.

11.2 Local Duality Theorems

We assume that the reader is familiar with Matsumura's treatment of Gorenstein rings in [35, pp. 139–145]. We remind the reader of the following necessary and sufficient condition, in terms of the Bass numbers $\mu^i(\mathfrak{p}, R)$, for R to be a Gorenstein ring.

11.2.1 Reminder. (See [35, Theorems 18.1 and 18.8].) The ring R is a Gorenstein ring if and only if, for all $i \in \mathbb{N}_0$ and all $\mathfrak{p} \in \operatorname{Spec}(R)$,

$$\mu^i(\mathfrak{p}, R) = \begin{cases} 0 & \text{if} \quad i \neq \operatorname{ht} \mathfrak{p}, \\ 1 & \text{if} \quad i = \operatorname{ht} \mathfrak{p}, \end{cases}$$

that is, if and only if $E^i(R) \cong \bigoplus_{\substack{\mathfrak{p}\in\operatorname{Spec}(R)\\ \operatorname{ht}\mathfrak{p}=i}} E(R/\mathfrak{p})$ for all $i \in \mathbb{N}_0$.

11.2.2 Exercise. Suppose that $(R, \mathfrak{m})$ is a Gorenstein local ring of dimension n, and let

$$I^\bullet : 0 \longrightarrow I^0 \xrightarrow{d^0} I^1 \longrightarrow \cdots \longrightarrow I^{n-1} \xrightarrow{d^{n-1}} I^n \longrightarrow 0$$

be a minimal injective resolution of R. (We are using 11.2.1 when we 'terminate' this resolution after the n-th term.) Set $E := I^n$, so that $E \cong E(R/\mathfrak{m})$ by 11.2.1. Let $V := \{\mathfrak{p} \in \operatorname{Spec}(R) : \operatorname{ht}\mathfrak{p} = n-1 \text{ and } \mathfrak{p} \supseteq \mathfrak{a}\}$, and, for each $\mathfrak{p} \in V$, let $\mathfrak{c}(\mathfrak{p})$ denote the kernel of the natural ring homomorphism $R \longrightarrow R_\mathfrak{p}$.

(i) Prove that $\operatorname{Im}\Gamma_\mathfrak{a}(d^{n-1}) = \sum_{\mathfrak{p}\in V}\left(\bigcup_{i\in\mathbb{N}}\left(0 :_E \mathfrak{p}^{(i)}\right)\right)$.

(ii) Assume now that R is complete. Prove that

$$H^n_\mathfrak{a}(R) \cong \operatorname{Hom}_R\left(\bigcap_{\mathfrak{p}\in V}\mathfrak{c}(\mathfrak{p}), E\right).$$

(The results of this exercise provided the key steps in a short proof of the local Lichtenbaum-Hartshorne Vanishing Theorem (see 8.2.1) given by F. W. Call and R. Y. Sharp in [7]: a reader who finds this exercise difficult is referred to that paper for details.)

We now start our approach to the Local Duality Theorem.

11.2.3 Lemma. *Let $(R, \mathfrak{m})$ be a Gorenstein local ring of dimension n. Then $H^n_\mathfrak{m}(R) \cong E(R/\mathfrak{m})$, the injective envelope of the simple R-module $R/\mathfrak{m}$.*

Proof. Let

$$I^\bullet : 0 \longrightarrow I^0 \xrightarrow{d^0} I^1 \longrightarrow \cdots \longrightarrow I^{n-1} \xrightarrow{d^{n-1}} I^n \longrightarrow 0$$

be a minimal injective resolution of R. We calculate $H^n_\mathfrak{m}(R)$ by working out the n-th cohomology module of the complex $\Gamma_\mathfrak{m}(I^\bullet)$.

By 11.2.1,

$$I^i \cong \bigoplus_{\substack{\mathfrak{p}\in\operatorname{Spec}(R)\\ \operatorname{ht}\mathfrak{p}=i}} E(R/\mathfrak{p}) \qquad \text{for all } i \in \mathbb{N}_0.$$

Let $\mathfrak{p} \in \operatorname{Spec}(R)$ with $\mathfrak{p} \neq \mathfrak{m}$. Then there exists $r \in \mathfrak{m} \setminus \mathfrak{p}$. Now, by 10.1.3(iii), multiplication by r provides an automorphism of $E(R/\mathfrak{p})$, and so $\Gamma_\mathfrak{m}(E(R/\mathfrak{p})) = 0$. Hence $\Gamma_\mathfrak{m}(I^i) = 0$ for all $i \in \mathbb{N}_0$ with $i \neq n$.

On the other hand, $E(R/\mathfrak{m})$ is $\mathfrak{m}$-torsion, again by 10.1.3(iii). Thus all the terms other than the n-th of the complex $\Gamma_\mathfrak{m}(I^\bullet)$ are zero, while its n-th term is isomorphic to $E(R/\mathfrak{m})$. Hence $H^n_\mathfrak{m}(R) \cong E(R/\mathfrak{m})$. □

11.2.4 ♯Exercise. (i) Let $T : \mathscr{C}(R) \longrightarrow \mathscr{C}(R)$ be a covariant R-linear functor, and let B be an R-module.

Show that there is a natural transformation of functors

$$\phi : T \longrightarrow \mathrm{Hom}_R(\mathrm{Hom}_R(\,\cdot\,, B), T(B))$$

(from $\mathscr{C}(R)$ to itself) which, for an R-module M, is such that $(\phi_M(y))(f) = T(f)(y)$ for all $y \in T(M)$ and all $f \in \mathrm{Hom}_R(M, B)$.

Show also that, if each endomorphism of B can be realized as multiplication by precisely one element of R, then ϕ_B is an isomorphism.

(ii) Now suppose that $(R, \mathfrak{m})$ is a Gorenstein local ring of dimension n; set $E := E(R/\mathfrak{m})$ and $D := \mathrm{Hom}_R(\,\cdot\,, E)$.

Use part (i) and 11.2.3 to show that there is a natural transformation of functors

$$\phi_0 : H^n_{\mathfrak{m}} \longrightarrow D(\mathrm{Hom}_R(\,\cdot\,, R))$$

(from $\mathscr{C}(R)$ to itself) which is such that ϕ_{0R} is an isomorphism.

Let M be a finitely generated R-module. Use Grothendieck's Vanishing Theorem 6.1.2, together with the fact that M can be included in an exact sequence $F_1 \longrightarrow F_0 \longrightarrow M \longrightarrow 0$ in which F_1 and F_0 are finitely generated free R-modules, to show that ϕ_{0M} is an isomorphism.

We can now present the Local Duality Theorem for a Gorenstein local ring.

11.2.5 Local duality for a Gorenstein local ring. *Let $(R, \mathfrak{m})$ be a Gorenstein local ring of dimension n; set $E := E(R/\mathfrak{m})$ and $D := \mathrm{Hom}_R(\,\cdot\,, E)$. By 11.2.4, there is a natural transformation of functors*

$$\phi_0 : H^n_{\mathfrak{m}} \longrightarrow D(\mathrm{Hom}_R(\,\cdot\,, R))$$

(from $\mathscr{C}(R)$ to itself) which is such that ϕ_{0M} is an isomorphism for every finitely generated R-module M.

There is a unique extension of ϕ_0 to a homomorphism

$$\Phi := (\phi_i)_{i \in \mathbb{N}_0} : \left(H^{n-i}_{\mathfrak{m}}\right)_{i \in \mathbb{N}_0} \longrightarrow \left(D(\mathrm{Ext}^i_R(\,\cdot\,, R))\right)_{i \in \mathbb{N}_0}$$

of (positive strongly) connected sequences of covariant functors from $\mathscr{C}(R)$ to $\mathscr{C}(R)$. Furthermore, ϕ_{iM} is an isomorphism for all $i \in \mathbb{N}_0$ whenever M is a finitely generated R-module.

In particular, for each finitely generated R-module M,

$$H^{n-i}_{\mathfrak{m}}(M) \cong D(\mathrm{Ext}^i_R(M, R)) \qquad \textit{for all } i \in \mathbb{Z}.$$

Proof. By Grothendieck's Vanishing Theorem 6.1.2, the functor $H^n_{\mathfrak{m}}$ is right exact; it is an easy consequence of this that $\left(H^{n-i}_{\mathfrak{m}}\right)_{i\in\mathbb{N}_0}$ is a positive strongly connected sequence of covariant functors.

Since depth $R = n$, it follows from 6.2.8 and 3.4.10 that $H^{n-i}_{\mathfrak{m}}(P) = 0$ for all $i \in \mathbb{N}$ and all projective R-modules P; also $D(\operatorname{Ext}^i_R(P, R)) = 0$ for all $i \in \mathbb{N}$ and all projective R-modules P. It follows from the analogue of 1.3.4 for positive connected sequences that ϕ_0 can be incorporated into a (uniquely determined) homomorphism

$$\Phi := (\phi_i)_{i\in\mathbb{N}_0} : \left(H^{n-i}_{\mathfrak{m}}\right)_{i\in\mathbb{N}_0} \longrightarrow \left(D(\operatorname{Ext}^i_R(\,\cdot\,, R))\right)_{i\in\mathbb{N}_0}$$

of connected sequences. Furthermore, it is easy to prove by induction that, for each $i \in \mathbb{N}$, the homomorphism ϕ_{iM} is an isomorphism whenever M is a finitely generated R-module: use the fact that such an M can be included in an exact sequence $0 \longrightarrow K \longrightarrow F \longrightarrow M \longrightarrow 0$ in which F is a finitely generated free R-module. □

11.2.6 Local Duality Theorem. *Suppose that $(R, \mathfrak{m})$ is a local ring which is a homomorphic image of a Gorenstein local ring $(R', \mathfrak{m}')$ of dimension n': let $f : R' \to R$ be a surjective ring homomorphism. Set $E := E(R/\mathfrak{m})$ and $D := \operatorname{Hom}_R(\,\cdot\,, E)$.*

An R-module M can be regarded as an R'-module by means of f: then M, and, for each $j \in \mathbb{N}_0$, the modules $\operatorname{Ext}^j_{R'}(M, R')$ and $D(\operatorname{Ext}^j_{R'}(M, R'))$, inherit natural (R, R')-bimodule structures.

There is a homomorphism

$$\Phi := (\phi^i)_{i\in\mathbb{N}_0} : \left(H^i_{\mathfrak{m}}\right)_{i\in\mathbb{N}_0} \longrightarrow \left(D(\operatorname{Ext}^{n'-i}_{R'}(\,\cdot\,, R'))\right)_{i\in\mathbb{N}_0}$$

of (negative strongly) connected sequences of covariant functors from $\mathscr{C}(R)$ to $\mathscr{C}(R)$ which is such that ϕ^i_M is an isomorphism for all $i \in \mathbb{N}_0$ whenever M is a finitely generated R-module.

Consequently (as $\operatorname{inj\,dim}_{R'} R' = n'$), for each finitely generated R-module M,

$$H^i_{\mathfrak{m}}(M) \cong D(\operatorname{Ext}^{n'-i}_{R'}(M, R')) = \operatorname{Hom}_R(\operatorname{Ext}^{n'-i}_{R'}(M, R'), E)$$

for all $i \in \mathbb{Z}$.

Proof. Let $E' := E_{R'}(R'/\mathfrak{m}')$, and let $D' := \operatorname{Hom}_{R'}(\,\cdot\,, E')$.

By 11.2.5, there is a homomorphism

$$\Psi := (\psi_i)_{i\in\mathbb{N}_0} : \left(H^{n'-i}_{\mathfrak{m}'}\right)_{i\in\mathbb{N}_0} \longrightarrow \left(D'(\operatorname{Ext}^i_{R'}(\,\cdot\,, R'))\right)_{i\in\mathbb{N}_0}$$

of (positive strongly) connected sequences of covariant functors from $\mathscr{C}(R')$ to $\mathscr{C}(R')$ which is such that $\psi_{iM'}$ is an isomorphism for all $i \in \mathbb{N}_0$ whenever M' is

a finitely generated R'-module. We can interpret

$$(\psi_{n'-i})_{i\in\mathbb{N}_0} : \left(H^i_{\mathfrak{m}'}\right)_{i\in\mathbb{N}_0} \longrightarrow \left(D'(\mathrm{Ext}^{n'-i}_{R'}(\,\cdot\,, R'))\right)_{i\in\mathbb{N}_0}$$

as a homomorphism of negative connected sequences.

Let $\lceil_{R'} : \mathscr{C}(R) \to \mathscr{C}(R')$ denote the functor obtained from restriction of scalars (using f). If we precede each $\psi_{n'-i}$ by $\lceil_{R'}$, we can deduce from the Independence Theorem 4.2.1 that there is a homomorphism

$$(\widetilde{\psi}^i)_{i\in\mathbb{N}_0} : \left(H^i_{\mathfrak{m}}\right)_{i\in\mathbb{N}_0} \longrightarrow \left(D'(\mathrm{Ext}^{n'-i}_{R'}(\,\cdot\,, R'))\right)_{i\in\mathbb{N}_0}$$

of (negative strongly) connected sequences of covariant functors from $\mathscr{C}(R)$ to $\mathscr{C}(R')$ which is such that $\widetilde{\psi}^i_M$ is an isomorphism for all $i \in \mathbb{N}_0$ whenever M is a finitely generated R-module.

Let $\mathfrak{c} := \mathrm{Ker}\, f$. Let M be an arbitrary R-module. Then $(0 :_{E'} \mathfrak{c})$, and, for each $j \in \mathbb{N}_0$, the modules $\mathrm{Ext}^j_{R'}(M, R')$ and $D'(\mathrm{Ext}^j_{R'}(M, R'))$, all inherit natural R-module structures: for each of these modules, and for $H^j_{\mathfrak{m}}(M)$, we have $f(r')y = r'y$ for all $r' \in R'$ and y in the module. It follows that

$$\begin{aligned} D'(\mathrm{Ext}^j_{R'}(M, R')) &= \mathrm{Hom}_{R'}(\mathrm{Ext}^j_{R'}(M, R'), E') \\ &= \mathrm{Hom}_{R'}(\mathrm{Ext}^j_{R'}(M, R'), (0 :_{E'} \mathfrak{c})) \\ &= \mathrm{Hom}_{R}(\mathrm{Ext}^j_{R'}(M, R'), (0 :_{E'} \mathfrak{c})). \end{aligned}$$

Thus, for each $i \in \mathbb{N}_0$, we can regard

$$\widetilde{\psi}^i_M : H^i_{\mathfrak{m}}(M) \longrightarrow \mathrm{Hom}_R(\mathrm{Ext}^{n'-i}_{R'}(M, R'), (0 :_{E'} \mathfrak{c}))$$

as an R-homomorphism. All that remains in order to complete the proof is to note that, by 10.1.15, there are R-isomorphisms

$$(0 :_{E'} \mathfrak{c}) \cong E_R(R'/\mathfrak{m}') \cong E_R(R/\mathfrak{m}) = E. \ \square$$

Some readers might think it unsatisfactory that the statement of the Local Duality Theorem 11.2.6 involves 'Ext' modules calculated over the ring R' of which R is a homomorphic image. In the case when $(R, \mathfrak{m})$ is actually a Cohen-Macaulay homomorphic image of a Gorenstein local ring, we can give a more satisfactory formulation of the Local Duality Theorem. This will involve the theory of canonical modules for such rings, and for this discussion we shall assume that the reader is familiar with some properties of canonical modules, including those developed in 3.3.1–3.3.8 of the book [6] by W. Bruns and J. Herzog; alternatively, the reader can consult the standard reference [24] by Herzog and E. Kunz. The main aspects that we shall need are summarized in 11.2.7 below.

11.2.7 Reminders. Let $(R, \mathfrak{m})$ be a Cohen-Macaulay local ring of dimension n.

(i) A finitely generated R-module C is a *canonical module* for R if and only if

$$\mu^i(\mathfrak{m}, C) = \begin{cases} 0 & \text{if} \quad i \neq n, \\ 1 & \text{if} \quad i = n. \end{cases}$$

Note, in particular, that a canonical module for R is a Cohen-Macaulay R-module of dimension n.

(ii) There exists a canonical module for R if and only if R is a homomorphic image of a Gorenstein local ring; then, any two canonical modules for R are isomorphic, we denote by ω_R one choice of canonical module for R, and $(\omega_R)_{\mathfrak{p}} \cong \omega_{R_{\mathfrak{p}}}$ for all $\mathfrak{p} \in \operatorname{Spec}(R)$. (See [6, Theorems 3.3.4(b), 3.3.5(b) and 3.3.6].)

(iii) If R is a homomorphic image of a Gorenstein local ring $(R', \mathfrak{m}')$ of dimension n', then the R-module $\operatorname{Ext}_{R'}^{n'-n}(R, R')$ is a canonical module for R. (See [6, Theorem 3.3.7].)

(iv) If there exists a canonical module ω_R for R, then each endomorphism of ω_R can be realized as multiplication by precisely one element of R. (See [6, Theorem 3.3.4(d)].)

(v) Let C, C' be canonical modules for R. By parts (ii) and (iv),

$$\operatorname{Hom}_R(C, C') \cong \operatorname{Hom}_R(\omega_R, \omega_R) \cong R.$$

If ϕ is a generator of the (free, cyclic) R-module $\operatorname{Hom}_R(C, C')$, then ϕ is an isomorphism. (See [6, Theorem 3.3.4(c)].)

11.2.8 Local duality for a Cohen-Macaulay homomorphic image of a Gorenstein local ring. *Let $(R, \mathfrak{m})$ be a Cohen-Macaulay local ring of dimension n which is a homomorphic image of a Gorenstein local ring. Set $E := E(R/\mathfrak{m})$, and let $D := \operatorname{Hom}_R(\,\cdot\,, E)$.*

There is a natural transformation of functors

$$\phi_0 : H^n_{\mathfrak{m}} \longrightarrow D(\operatorname{Hom}_R(\,\cdot\,, \omega_R))$$

which is such that ϕ_{0M} is an isomorphism whenever M is a finitely generated R-module.

There is a unique extension of ϕ_0 to a homomorphism

$$\Phi := (\phi_i)_{i \in \mathbb{N}_0} : \left(H^{n-i}_{\mathfrak{m}}\right)_{i \in \mathbb{N}_0} \longrightarrow \left(D(\operatorname{Ext}^i_R(\,\cdot\,, \omega_R))\right)_{i \in \mathbb{N}_0}$$

of (positive strongly) connected sequences of covariant functors from $\mathscr{C}(R)$ to $\mathscr{C}(R)$. Furthermore, ϕ_{iM} is an isomorphism for all $i \in \mathbb{N}_0$ whenever M is a finitely generated R-module.

In particular, for each finitely generated R-module M,

$$H_{\mathfrak{m}}^{n-i}(M) \cong D(\mathrm{Ext}_R^i(M, \omega_R)) \qquad \textit{for all } i \in \mathbb{Z}.$$

Proof. Let $(R', \mathfrak{m}')$ be a Gorenstein local ring of dimension n' for which there exists a surjective ring homomorphism $f : R' \to R$. By 11.2.7(iii), we have $\omega_R \cong \mathrm{Ext}_{R'}^{n'-n}(R, R')$. By the Local Duality Theorem 11.2.6, we have $H_{\mathfrak{m}}^n(R) \cong D(\mathrm{Ext}_{R'}^{n'-n}(R, R')) \cong D(\omega_R)$. By Exercise 6.1.9, the functor $H_{\mathfrak{m}}^n$ is naturally equivalent to $(\,\cdot\,) \otimes_R H_{\mathfrak{m}}^n(R)$. Therefore $H_{\mathfrak{m}}^n$ is naturally equivalent to $(\,\cdot\,) \otimes_R \mathrm{Hom}_R(\omega_R, E)$. We can now make use of 10.2.16 in order to arrive at a natural transformation of functors

$$\phi_0 : H_{\mathfrak{m}}^n \longrightarrow D(\mathrm{Hom}_R(\,\cdot\,, \omega_R))$$

which is such that ϕ_{0M} is an isomorphism whenever M is a finitely generated R-module.

We now reason as in the proof of 11.2.5. Since $\operatorname{depth} R = n$, it follows from 6.2.8 and 3.4.10 that $H_{\mathfrak{m}}^{n-i}(P) = 0$ for all $i \in \mathbb{N}$ and all projective R-modules P; also $D(\mathrm{Ext}_R^i(P, \omega_R)) = 0$ for all $i \in \mathbb{N}$ and all projective R-modules P. It follows from the analogue of 1.3.4 for positive connected sequences that ϕ_0 can be incorporated into a (uniquely determined) homomorphism

$$\Phi := (\phi_i)_{i \in \mathbb{N}_0} : \left(H_{\mathfrak{m}}^{n-i}\right)_{i \in \mathbb{N}_0} \longrightarrow \left(D(\mathrm{Ext}_R^i(\,\cdot\,, \omega_R))\right)_{i \in \mathbb{N}_0}$$

of connected sequences, and it is easy to prove by induction that, for each $i \in \mathbb{N}$, the homomorphism ϕ_{iM} is an isomorphism whenever M is a finitely generated R-module. □

11.3 Some applications

Our aim in the remainder of this chapter is to provide illustrations of the use of the Local Duality Theorem 11.2.6. We shall outline how this theorem can be used to give a different proof of Theorem 7.3.2, and we shall also present what we call the 'Shifted Localization Principle'. The results we present below are fairly straightforward consequences of the Local Duality Theorem in the case when the underlying local ring is a homomorphic image of a Gorenstein local ring. However, the reader should be warned that not all of them are valid over general local rings, and that, even for those that are, proofs by this 'local duality' route will involve us in delicate arguments about flat local homomorphisms of local rings, because we shall employ completions, and Cohen's Theorem that a complete local ring is a homomorphic image of a regular local ring.

The next exercise will be useful in applications of the Local Duality Theorem.

11.3.1 ♯Exercise. Suppose that $(R, \mathfrak{m})$ is a local ring which is a homomorphic image of a local ring $(R', \mathfrak{m}')$: let $f : R' \to R$ be a surjective ring homomorphism. Let $\mathfrak{p} \in \operatorname{Spec}(R)$, and let $\mathfrak{p}' = f^{-1}(\mathfrak{p}), \in \operatorname{Spec}(R')$. Of course, $R'/\mathfrak{p}' \cong R/\mathfrak{p}$, so that these rings have equal dimensions. Moreover, observe that f induces a surjective ring homomorphism $f' : R'_{\mathfrak{p}'} \longrightarrow R_{\mathfrak{p}}$ which is such that $f'(r'/s') = f(r')/f(s')$ for all $r' \in R'$ and $s' \in R' \setminus \mathfrak{p}'$.

Let M be a finitely generated R-module, and let $j \in \mathbb{N}_0$. We can form $\operatorname{Ext}^j_{R'_{\mathfrak{p}'}}(M_{\mathfrak{p}}, R'_{\mathfrak{p}'})$, which has a natural $R_{\mathfrak{p}}$-module structure. We can also localize the R-module $\operatorname{Ext}^j_{R'}(M, R')$ at $\mathfrak{p}$. Show that

$$\operatorname{Ext}^j_{R'_{\mathfrak{p}'}}(M_{\mathfrak{p}}, R'_{\mathfrak{p}'}) \cong \left(\operatorname{Ext}^j_{R'}(M, R')\right)_{\mathfrak{p}} \qquad \text{as } R_{\mathfrak{p}}\text{-modules.}$$

11.3.2 Shifted Localization Principle. (See R. Y. Sharp [58, Theorem (3.7)].) *Suppose that $(R, \mathfrak{m})$ is a local ring which is a homomorphic image of a Gorenstein local ring. Let M be a finitely generated R-module. Let $\mathfrak{p} \in \operatorname{Spec}(R)$, and let $\dim R/\mathfrak{p} = t$. Let $\mathfrak{q} \in \operatorname{Spec}(R)$ be such that $\mathfrak{q} \subseteq \mathfrak{p}$, and let $i \in \mathbb{Z}$.*

By 7.1.3, the $R_{\mathfrak{p}}$-module $H^i_{\mathfrak{p}R_{\mathfrak{p}}}(M_{\mathfrak{p}})$ is Artinian, and $H^{i+t}_{\mathfrak{m}}(M)$ is an Artinian R-module. Then $\mathfrak{q}R_{\mathfrak{p}} \in \operatorname{Att}_{R_{\mathfrak{p}}}\left(H^i_{\mathfrak{p}R_{\mathfrak{p}}}(M_{\mathfrak{p}})\right)$ if and only if $\mathfrak{q} \in \operatorname{Att}_R(H^{i+t}_{\mathfrak{m}}(M))$.

Proof. Let $(R', \mathfrak{m}')$ be a Gorenstein local ring of dimension n' for which there exists a surjective ring homomorphism $f : R' \to R$. Set $E := E(R/\mathfrak{m})$.

As in 11.3.1, let $\mathfrak{p}' = f^{-1}(\mathfrak{p})$. Now $R'_{\mathfrak{p}'}$ is a Gorenstein local ring, and $\dim R'/\mathfrak{p}' = t$. Since R' is Gorenstein, we have

$$\dim R'_{\mathfrak{p}'} = \dim R' - \dim R'/\mathfrak{p}' = n' - t.$$

Let $f' : R'_{\mathfrak{p}'} \longrightarrow R_{\mathfrak{p}}$ be the surjective ring homomorphism for which

$$f'(r'/s') = f(r')/f(s') \qquad \text{for all } r' \in R',\ s' \in R' \setminus \mathfrak{p}'.$$

By 11.3.1, there is, for each $j \in \mathbb{Z}$, an $R_{\mathfrak{p}}$-isomorphism

$$\operatorname{Ext}^j_{R'_{\mathfrak{p}'}}(M_{\mathfrak{p}}, R'_{\mathfrak{p}'}) \cong \left(\operatorname{Ext}^j_{R'}(M, R')\right)_{\mathfrak{p}}.$$

By the Local Duality Theorem 11.2.6, we have

$$H^i_{\mathfrak{p}R_{\mathfrak{p}}}(M_{\mathfrak{p}}) \cong \operatorname{Hom}_{R_{\mathfrak{p}}}\left(\operatorname{Ext}^{n'-t-i}_{R'_{\mathfrak{p}'}}(M_{\mathfrak{p}}, R'_{\mathfrak{p}'}), E_{R_{\mathfrak{p}}}(R_{\mathfrak{p}}/\mathfrak{p}R_{\mathfrak{p}})\right)$$

as $R_{\mathfrak{p}}$-modules, and $H^{i+t}_{\mathfrak{m}}(M) \cong \operatorname{Hom}_R(\operatorname{Ext}^{n'-t-i}_{R'}(M, R'), E)$.

By 10.2.20, we have that $\mathfrak{q}R_{\mathfrak{p}} \in \operatorname{Att}_{R_{\mathfrak{p}}}\left(H^i_{\mathfrak{p}R_{\mathfrak{p}}}(M_{\mathfrak{p}})\right)$ if and only if

$$\mathfrak{q}R_{\mathfrak{p}} \in \operatorname{Ass}_{R_{\mathfrak{p}}}\left(\operatorname{Ext}^{n'-t-i}_{R'_{\mathfrak{p}'}}(M_{\mathfrak{p}}, R'_{\mathfrak{p}'})\right),$$

that is, if and only if $\mathfrak{q}R_{\mathfrak{p}} \in \operatorname{Ass}_{R_{\mathfrak{p}}}\left((\operatorname{Ext}^{n'-t-i}_{R'}(M,R'))_{\mathfrak{p}}\right)$; it is elementary that this is the case if and only if $\mathfrak{q} \in \operatorname{Ass}_R(\operatorname{Ext}^{n'-t-i}_{R'}(M,R'))$; and it follows from the second of the two isomorphisms deduced above from the Local Duality Theorem, and another use of 10.2.20, that this is the case if and only if $\mathfrak{q} \in \operatorname{Att}_R(H^{i+t}_{\mathfrak{m}}(M))$. □

11.3.3 Corollary. *Suppose that $(R,\mathfrak{m})$ is a local ring which is a homomorphic image of a Gorenstein local ring. Let M be a non-zero, finitely generated R-module, and let $\mathfrak{p} \in \operatorname{Ass} M$. Suppose that $\dim R/\mathfrak{p} = j$. Then $H^j_{\mathfrak{m}}(M) \neq 0$ and $\mathfrak{p} \in \operatorname{Att}(H^j_{\mathfrak{m}}(M))$. Moreover, if $j > 0$, then $H^j_{\mathfrak{m}}(M)$ is not finitely generated.*

Proof. Since $\mathfrak{p}R_{\mathfrak{p}} \in \operatorname{Ass}_{R_{\mathfrak{p}}} M_{\mathfrak{p}}$, it follows that $M_{\mathfrak{p}}$ has a submodule isomorphic to $R_{\mathfrak{p}}/\mathfrak{p}R_{\mathfrak{p}}$. Hence $H^0_{\mathfrak{p}R_{\mathfrak{p}}}(M_{\mathfrak{p}})$ is a non-zero $R_{\mathfrak{p}}$-module, necessarily of finite length. Therefore, by 7.2.12,

$$\operatorname{Att}_{R_{\mathfrak{p}}}\left(H^0_{\mathfrak{p}R_{\mathfrak{p}}}(M_{\mathfrak{p}})\right) = \{\mathfrak{p}R_{\mathfrak{p}}\},$$

and so the result follows from the Shifted Localization Principle 11.3.2 and another use of 7.2.12. □

11.3.4 Corollary. (Compare Thereom 7.3.2 and Corollary 7.3.3.) *Suppose that $(R,\mathfrak{m})$ is a local ring which is a homomorphic image of a Gorenstein local ring. Let M be a non-zero, finitely generated R-module of dimension n. Then $H^n_{\mathfrak{m}}(M) \neq 0$ and*

$$\{\mathfrak{p} \in \operatorname{Ass} M : \dim R/\mathfrak{p} = n\} \subseteq \operatorname{Att}(H^n_{\mathfrak{m}}(M)).$$

Moreover, if $n > 0$, then $H^n_{\mathfrak{m}}(M)$ is not finitely generated. □

In order to provide a 'local duality' proof of the full statement of Theorem 7.3.2, even for a local ring which is a homomorphic image of a Gorenstein local ring, we have to work a little harder.

11.3.5 Corollary. *Suppose that $(R,\mathfrak{m})$ is a local ring which is a homomorphic image of a Gorenstein local ring. Let M be a finitely generated R-module, and let j be an integer for which $H^j_{\mathfrak{m}}(M) \neq 0$. For each $\mathfrak{p} \in \operatorname{Att}_R(H^j_{\mathfrak{m}}(M))$, we have $\dim R/\mathfrak{p} \leq j$.*

Proof. Let $(R',\mathfrak{m}')$ be a Gorenstein local ring of dimension n' for which there exists a surjective ring homomorphism $f : R' \to R$. It follows from the Local Duality Theorem 11.2.6 and 10.2.20 that $\operatorname{Ext}^{n'-j}_{R'}(M,R')$ is a non-zero R-module having $\mathfrak{p}$ as an associated prime. Hence $(\operatorname{Ext}^{n'-j}_{R'}(M,R'))_{\mathfrak{p}} \neq 0$.

Let $\mathfrak{p}' = f^{-1}(\mathfrak{p})$, so that $R'_{\mathfrak{p}'}$ is a Gorenstein local ring with $\dim R'/\mathfrak{p}' = \dim R/\mathfrak{p}$. We can use the ideas of 11.3.1 to see that

$$\operatorname{Ext}^{n'-j}_{R'_{\mathfrak{p}'}}(M_{\mathfrak{p}}, R'_{\mathfrak{p}'}) \cong \left(\operatorname{Ext}^{n'-j}_{R'}(M, R')\right)_{\mathfrak{p}} \qquad \text{as } R_{\mathfrak{p}}\text{-modules.}$$

Hence

$$n' - j \leq \operatorname{inj\,dim}_{R'_{\mathfrak{p}'}} R'_{\mathfrak{p}'} = \dim R'_{\mathfrak{p}'} = \dim R' - \dim R'/\mathfrak{p}' = n' - \dim R/\mathfrak{p}$$

by properties of Gorenstein rings (see [35, pp. 139–145]). We can therefore deduce that $\dim R/\mathfrak{p} \leq j$. □

We now show how to establish the result of 7.3.2, in the special case in which R is a homomorphic image of a Gorenstein local ring, by 'local duality' arguments.

11.3.6 Theorem. (Compare Thereom 7.3.2.) *Suppose that $(R, \mathfrak{m})$ is a local ring which is a homomorphic image of a Gorenstein local ring. Let M be a non-zero, finitely generated R-module of dimension n. Then $H^n_{\mathfrak{m}}(M) \neq 0$ and*

$$\operatorname{Att}(H^n_{\mathfrak{m}}(M)) = \{\mathfrak{p} \in \operatorname{Ass} M : \dim R/\mathfrak{p} = n\}.$$

Proof. In view of 11.3.4, it only remains for us to prove that, if $\mathfrak{p} \in \operatorname{Att}(H^n_{\mathfrak{m}}(M))$, then $\dim R/\mathfrak{p} = n$ (as it will then be automatic that $\mathfrak{p}$ is an associated prime of M).

Of course, $\mathfrak{p} \supseteq (0 : M)$, and, when $H^n_{\mathfrak{m}}(M)$ is regarded as an $R/(0 : M)$-module, then (by 7.2.5, for example), $\mathfrak{p}/(0 : M) \in \operatorname{Att}_{R/(0:M)}(H^n_{\mathfrak{m}}(M))$. By the Independence Theorem 4.2.1, we have $H^n_{\mathfrak{m}}(M) \cong H^n_{\mathfrak{m}/(0:M)}(M)$. Therefore, we can, and do, assume for the remainder of this proof that $(0 : M) = 0$.

Of course, $\dim R/\mathfrak{p} \leq n$. Let $(R', \mathfrak{m}')$ be a Gorenstein local ring of dimension n' for which there exists a surjective ring homomorphism $f : R' \to R$. Let $\mathfrak{c} = \operatorname{Ker} f$. Now $\operatorname{ht} \mathfrak{c} = n' - n$, and, since a Gorenstein ring is Cohen-Macaulay, there exists an R'-sequence $r'_1, \ldots, r'_{n'-n}$ of length $n' - n$ contained in $\mathfrak{c}$. Now $R'/(r'_1, \ldots, r'_{n'-n})$ is a Gorenstein local ring of dimension n (see [35, Exercise 18.1]), and so we can, and do, assume henceforth in this proof that $n' = n$.

It follows from 11.2.6 and 10.2.20 that $\operatorname{Hom}_{R'}(M, R')$ is a non-zero R-module having $\mathfrak{p}$ as an associated prime. Let $\mathfrak{p}' = f^{-1}(\mathfrak{p})$: it follows that, when we regard M and $\operatorname{Hom}_{R'}(M, R')$ as R'-modules,

$$\mathfrak{p}' \in \operatorname{Ass}_{R'}(\operatorname{Hom}_{R'}(M, R')).$$

But, as M is an R'-homomorphic image of a finitely generated free R'-module,

F' say, $\mathrm{Hom}_{R'}(M, R')$ is R'-isomorphic to a submodule of the finitely generated free R'-module $\mathrm{Hom}_{R'}(F', R')$. Hence

$$\mathfrak{p}' \in \mathrm{Ass}_{R'}(\mathrm{Hom}_{R'}(M, R')) \subseteq \mathrm{Ass}_{R'}(\mathrm{Hom}_{R'}(F', R')) = \mathrm{Ass}_{R'} R',$$

and so $\dim R/\mathfrak{p} = \dim R'/\mathfrak{p}' = \dim R' = n$ since R' is Gorenstein. □

The results 11.3.2, 11.3.3, 11.3.4, 11.3.5 and 11.3.6 have all been established under the hypothesis that the underlying local ring is a homomorphic image of a Gorenstein local ring. Unfortunately, they are not all true for general local rings: see 11.3.14 below. However, the next four exercises, which are directed at those readers who are experienced at working with the fibres of flat homomorphisms of commutative Noetherian rings, show that some of the above-mentioned results do have extensions which are valid over general local rings.

11.3.7 Exercise. Suppose that $(R, \mathfrak{m})$ is a local ring, that $(R', \mathfrak{m}')$ is a second local ring, and that $f : R \longrightarrow R'$ is a flat local ring homomorphism such that the extension $\mathfrak{m}R'$ of $\mathfrak{m}$ to R' under f is $\mathfrak{m}'$-primary. Let $i \in \mathbb{N}_0$, and let M be a non-zero, finitely generated R-module with the property that $H^i_{\mathfrak{m}}(M) \neq 0$.

(i) Use the Flat Base Change Theorem 4.3.2 to see that there is an R'-isomorphism $H^i_{\mathfrak{m}'}(M \otimes_R R') \cong H^i_{\mathfrak{m}}(M) \otimes_R R'$.

(ii) Let

$$H^i_{\mathfrak{m}}(M) = S_1 + \cdots + S_h \qquad \text{with } S_j \ \ \mathfrak{p}_j\text{-secondary } (1 \leq j \leq h)$$

be a minimal secondary representation of $H^i_{\mathfrak{m}}(M)$. For each $j = 1, \ldots, h$, let $u_j : S_j \to H^i_{\mathfrak{m}}(M)$ be the inclusion map, and let $T_j := (u_j \otimes \mathrm{Id}_{R'})(S_j \otimes_R R')$. Show that

$$H^i_{\mathfrak{m}}(M) \otimes_R R' = T_1 + \cdots + T_h$$

and that $\left\{f^{-1}(\mathfrak{P}) : \mathfrak{P} \in \mathrm{Att}_{R'}(T_j)\right\} = \left\{\mathfrak{p}_j\right\}$ for all $j = 1, \ldots, h$.

(iii) Show that

$$\mathrm{Att}_R(H^i_{\mathfrak{m}}(M)) = \left\{f^{-1}(\mathfrak{P}) : \mathfrak{P} \in \mathrm{Att}_{R'}(H^i_{\mathfrak{m}'}(M \otimes_R R'))\right\}.$$

11.3.8 Exercise: Weak General Shifted Localization Principle. (See R. Y. Sharp [58, Theorem (4.8)].) Suppose that $(R, \mathfrak{m})$ is a local ring. Let M be a finitely generated R-module. Let $\mathfrak{p} \in \mathrm{Spec}(R)$ and let $\dim R/\mathfrak{p} = t$. Let $i \in \mathbb{Z}$ and $\mathfrak{q} \in \mathrm{Spec}(R)$ be such that $\mathfrak{q} \subseteq \mathfrak{p}$ and $\mathfrak{q}R_{\mathfrak{p}} \in \mathrm{Att}_{R_{\mathfrak{p}}}\left(H^i_{\mathfrak{p}R_{\mathfrak{p}}}(M_{\mathfrak{p}})\right)$. Prove that $\mathfrak{q} \in \mathrm{Att}_R(H^{i+t}_{\mathfrak{m}}(M))$.

(Here are some hints: use Exercise 11.3.7, and Cohen's Theorem that a complete local ring is a homomorphic image of a regular local ring, in conjunction with the Shifted Localization Principle 11.3.2.)

11.3.9 Exercise. Use Exercise 11.3.8 to extend 11.3.3 to all local rings.

Thus, in detail, suppose that $(R, \mathfrak{m})$ is a local ring. Let M be a non-zero, finitely generated R-module, and let $\mathfrak{p} \in \operatorname{Ass} M$. Suppose that $\dim R/\mathfrak{p} = j$. Prove that $H^j_{\mathfrak{m}}(M) \neq 0$ and $\mathfrak{p} \in \operatorname{Att}(H^j_{\mathfrak{m}}(M))$.

11.3.10 Exercise. Use Exercise 11.3.7 and Cohen's Theorem that a complete local ring is a homomorphic image of a regular local ring to provide a 'local duality' proof, valid over an arbitrary local ring, of Theorem 7.3.2.

Thus, suppose that $(R, \mathfrak{m})$ is a local ring. Let M be a non-zero, finitely generated R-module of dimension n. Prove that $H^n_{\mathfrak{m}}(M) \neq 0$ and

$$\operatorname{Att}(H^n_{\mathfrak{m}}(M)) = \{\mathfrak{p} \in \operatorname{Ass} M : \dim R/\mathfrak{p} = n\}.$$

11.3.11 Exercise. Suppose that $(R, \mathfrak{m})$ is a local ring. Let M be a non-zero, finitely generated R-module. Let $\mathfrak{p} \in \operatorname{Supp}(M)$, and let $\operatorname{depth}_{R_{\mathfrak{p}}} M_{\mathfrak{p}} = \delta$ and $\dim R/\mathfrak{p} = t$. Show that $H^{\delta+t}_{\mathfrak{m}}(M) \neq 0$.

11.3.12 Theorem. *Suppose that $(R, \mathfrak{m})$ is a local ring. For a subset Z of* $\operatorname{Spec}(R)$, *we denote by* $\min Z$ *the set of minimal members of Z with respect to inclusion, by $\overline{Z}$ the closure of Z in the Zariski topology, and by $\mathring{Z}$ the 'punctured' set $Z \setminus \{\mathfrak{m}\}$.*

Suppose that R is a homomorphic image of a Gorenstein local ring, and let M be a finitely generated R-module. Let $i \in \mathbb{N}_0$. Then

$$\begin{aligned}\min\{\mathfrak{p} \in \mathring{\operatorname{Supp}}(M) : \operatorname{depth} M_{\mathfrak{p}} + \dim R/\mathfrak{p} = i\} \\ = \left(\min \mathring{\operatorname{Att}}_R(H^i_{\mathfrak{m}}(M))\right) \setminus \overline{\textstyle\bigcup_{j=0}^{i-1} \operatorname{Att}_R(H^j_{\mathfrak{m}}(M))}.\end{aligned}$$

Proof. The claim is clear when $i = 0$, since $\operatorname{Att}_R(H^0_{\mathfrak{m}}(M)) \subseteq \{\mathfrak{m}\}$. We therefore suppose that $i > 0$.

Suppose that $\mathfrak{p}$ is a minimal member of

$$\mathscr{P}^i(M) := \{\mathfrak{p}' \in \mathring{\operatorname{Supp}}(M) : \operatorname{depth} M_{\mathfrak{p}'} + \dim R/\mathfrak{p}' = i\}.$$

Then $H^{i-\dim R/\mathfrak{p}}_{\mathfrak{p}R_{\mathfrak{p}}}(M_{\mathfrak{p}}) \neq 0$, by 6.2.8. Thus $H^{i-\dim R/\mathfrak{p}}_{\mathfrak{p}R_{\mathfrak{p}}}(M_{\mathfrak{p}})$ has an attached prime: we show next that $\mathfrak{p}R_{\mathfrak{p}}$ is the one and only attached prime of this $R_{\mathfrak{p}}$-module.

To this end, suppose that there exists $\mathfrak{q} \in \operatorname{Spec}(R)$ with $\mathfrak{q} \subseteq \mathfrak{p}$ such that $\mathfrak{q}R_{\mathfrak{p}} \in \operatorname{Att}_{R_{\mathfrak{p}}}\left(H^{i-\dim R/\mathfrak{p}}_{\mathfrak{p}R_{\mathfrak{p}}}(M_{\mathfrak{p}})\right)$. Then, by the Shifted Localization Principle 11.3.2, we have $\mathfrak{q} \in \operatorname{Att}_R(H^i_{\mathfrak{m}}(M))$. Another use of the Shifted Localization Principle

now shows that $\mathfrak{q}R_{\mathfrak{q}} \in \operatorname{Att}_{R_{\mathfrak{q}}}\left(H_{\mathfrak{q}R_{\mathfrak{q}}}^{i-\dim R/\mathfrak{q}}(M_{\mathfrak{q}})\right)$, so that $i - \dim R/\mathfrak{q} \geq \operatorname{depth} M_{\mathfrak{q}}$ by 6.2.8. Hence $\operatorname{depth} M_{\mathfrak{q}} + \dim R/\mathfrak{q} \leq i$. However, by 9.3.3,

$$\operatorname{depth} M_{\mathfrak{q}} + \dim R/\mathfrak{q} \geq \operatorname{depth} M_{\mathfrak{p}} + \dim R/\mathfrak{p} = i.$$

Therefore, since $\mathfrak{p}$ is a minimal member of $\mathscr{S}^i(M)$, we must have $\mathfrak{q} = \mathfrak{p}$. Hence $\operatorname{Att}_{R_{\mathfrak{p}}}\left(H_{\mathfrak{p}R_{\mathfrak{p}}}^{i-\dim R/\mathfrak{p}}(M_{\mathfrak{p}})\right) = \{\mathfrak{p}R_{\mathfrak{p}}\}$, and a further use of the Shifted Localization Principle shows that $\mathfrak{p} \in \operatorname{Att}_R(H_{\mathfrak{m}}^i(M))$.

Next, we prove that $\mathfrak{p}$ is a minimal member of $\mathring{\operatorname{Att}}_R(H_{\mathfrak{m}}^i(M))$. To this end, suppose that $\mathfrak{q} \in \operatorname{Att}_R(H_{\mathfrak{m}}^i(M))$ with $\mathfrak{q} \subset \mathfrak{p}$, and look for a contradiction. Since $\mathfrak{q} \supseteq (0 : H_{\mathfrak{m}}^i(M)) \supseteq (0 : M)$, we must have $\mathfrak{q} \in \operatorname{Supp}(M)$, so that $\operatorname{depth} M_{\mathfrak{q}}$ is finite. Since $\mathfrak{q} \subset \mathfrak{p}$,

$$\operatorname{depth} M_{\mathfrak{q}} + \dim R/\mathfrak{q} \geq \operatorname{depth} M_{\mathfrak{p}} + \dim R/\mathfrak{p} = i,$$

by 9.3.3. As $\mathfrak{p}$ is a minimal member of $\mathscr{S}^i(M)$, it follows that

$$\operatorname{depth} M_{\mathfrak{q}} + \dim R/\mathfrak{q} > i.$$

Therefore, by 6.2.8, we have $H_{\mathfrak{q}R_{\mathfrak{q}}}^{i-\dim R/\mathfrak{q}}(M_{\mathfrak{q}}) = 0$, so that

$$\mathfrak{q}R_{\mathfrak{q}} \notin \operatorname{Att}_{R_{\mathfrak{q}}}\left(H_{\mathfrak{q}R_{\mathfrak{q}}}^{i-\dim R/\mathfrak{q}}(M_{\mathfrak{q}})\right)$$

and $\mathfrak{q} \notin \operatorname{Att}_R(H_{\mathfrak{m}}^i(M))$ by the Shifted Localization Principle. This contradiction shows that $\mathfrak{p}$ is a minimal member of $\mathring{\operatorname{Att}}_R(H_{\mathfrak{m}}^i(M))$.

Next, we show that $\mathfrak{p} \notin \overline{\bigcup_{j=0}^{i-1} \operatorname{Att}_R(H_{\mathfrak{m}}^j(M))}$. Suppose that $\mathfrak{p} \supseteq \mathfrak{q} \in \operatorname{Att}_R(H_{\mathfrak{m}}^j(M))$ for some integer j with $0 \leq j < i$, and look for a contradiction. Then $\mathfrak{q}R_{\mathfrak{p}} \in \operatorname{Att}_{R_{\mathfrak{p}}}\left(H_{\mathfrak{p}R_{\mathfrak{p}}}^{j-\dim R/\mathfrak{p}}(M_{\mathfrak{p}})\right)$, so that $H_{\mathfrak{p}R_{\mathfrak{p}}}^{j-\dim R/\mathfrak{p}}(M_{\mathfrak{p}}) \neq 0$ and $\operatorname{depth} M_{\mathfrak{p}} + \dim R/\mathfrak{p} \leq j < i$. This is a contradiction.

We have now shown that

$$\begin{aligned}\min\left\{\mathfrak{p} \in \mathring{\operatorname{Supp}}(M) : \operatorname{depth} M_{\mathfrak{p}} + \dim R/\mathfrak{p} = i\right\} \\ \subseteq \left(\min \mathring{\operatorname{Att}}_R(H_{\mathfrak{m}}^i(M))\right) \setminus \overline{\bigcup_{j=0}^{i-1} \operatorname{Att}_R(H_{\mathfrak{m}}^j(M))}.\end{aligned}$$

We now prove the reverse inclusion. Let

$$\mathfrak{p} \in \left(\min \mathring{\operatorname{Att}}_R(H_{\mathfrak{m}}^i(M))\right) \setminus \overline{\bigcup_{j=0}^{i-1} \operatorname{Att}_R(H_{\mathfrak{m}}^j(M))}.$$

The Shifted Localization Principle shows that

$$\mathfrak{p}R_{\mathfrak{p}} \in \operatorname{Att}_{R_{\mathfrak{p}}}\left(H_{\mathfrak{p}R_{\mathfrak{p}}}^{i-\dim R/\mathfrak{p}}(M_{\mathfrak{p}})\right),$$

so that $H_{\mathfrak{p}R_{\mathfrak{p}}}^{i-\dim R/\mathfrak{p}}(M_{\mathfrak{p}}) \neq 0$ and $\operatorname{depth} M_{\mathfrak{p}} + \dim R/\mathfrak{p} \leq i$. Let $k \in \mathbb{N}_0$ with $k < i - \dim R/\mathfrak{p}$: we claim that $H_{\mathfrak{p}R_{\mathfrak{p}}}^k(M_{\mathfrak{p}}) = 0$. If this were not the case, then there

would exist $\mathfrak{q} \in \operatorname{Spec}(R)$ with $\mathfrak{q} \subseteq \mathfrak{p}$ such that $\mathfrak{q}R_{\mathfrak{p}} \in \operatorname{Att}_{R_{\mathfrak{p}}}\left(H^k_{\mathfrak{p}R_{\mathfrak{p}}}(M_{\mathfrak{p}})\right)$. The Shifted Localization Principle would then show that $\mathfrak{q} \in \operatorname{Att}_R(H_{\mathfrak{m}}^{k+\dim R/\mathfrak{p}}(M))$, and since $k + \dim R/\mathfrak{p} < i$, this would contradict the hypothesis that $\mathfrak{p} \notin \overline{\bigcup_{j=0}^{i-1} \operatorname{Att}_R(H^j_{\mathfrak{m}}(M))}$. Thus $H^k_{\mathfrak{p}R_{\mathfrak{p}}}(M_{\mathfrak{p}}) = 0$ for all $k < i - \dim R/\mathfrak{p}$, as claimed. It follows from 6.2.8 that

$$\operatorname{depth} M_{\mathfrak{p}} + \dim R/\mathfrak{p} = i,$$

so that $\mathfrak{p} \in \mathscr{S}^i(M)$. Finally, if $\mathfrak{p}$ were not a minimal member of $\mathscr{S}^i(M)$, then it would strictly contain a minimal member $\mathfrak{p}'$ of $\mathscr{S}^i(M)$, and, by what we have already proved in the first three paragraphs of this proof, such a $\mathfrak{p}'$ would belong to $\mathring{\operatorname{Att}}_R(H^i_{\mathfrak{m}}(M))$, contrary to the fact that $\mathfrak{p}$ is a minimal member of this set. Hence

$$\begin{aligned}\min\left\{\mathfrak{p} \in \mathring{\operatorname{Supp}}(M) : \operatorname{depth} M_{\mathfrak{p}} + \dim R/\mathfrak{p} = i\right\} \\ \supseteq \left(\min \mathring{\operatorname{Att}}_R(H^i_{\mathfrak{m}}(M))\right) \setminus \overline{\bigcup_{j=0}^{i-1} \operatorname{Att}_R(H^j_{\mathfrak{m}}(M))}. \ \square\end{aligned}$$

11.3.13 Remark. In our opinion, the formula of Theorem 11.3.12 encapsulates in a concise manner important information connecting attached primes of local cohomology modules (with respect to the maximal ideal of a local ring satisfying certain conditions) and adjusted depths. For example, we show now that it essentially contains the result of Faltings' Annihilator Theorem 9.5.1 in the case in which $(R, \mathfrak{m})$ is a homomorphic image of a Gorenstein local ring and $\mathfrak{a} = \mathfrak{m}$. We consider this to be of interest, even though Exercise 9.6.6 provides a stronger result.

Let M be a finitely generated R-module and let $\mathfrak{b}$ be a proper ideal of R. Recall from 9.1.5 and 9.2.2 that

$$f^{\mathfrak{b}}_{\mathfrak{m}}(M) = \inf\left\{i \in \mathbb{N}_0 : \mathfrak{b} \nsubseteq \sqrt{(0 : H^i_{\mathfrak{m}}(M))}\right\}$$

and

$$\begin{aligned}\lambda^{\mathfrak{b}}_{\mathfrak{m}}(M) &= \inf\left\{\operatorname{adj}_{\mathfrak{m}} \operatorname{depth} M_{\mathfrak{p}} : \mathfrak{p} \in \operatorname{Spec}(R) \setminus \operatorname{Var}(\mathfrak{b})\right\} \\ &= \inf\left\{\operatorname{depth} M_{\mathfrak{p}} + \operatorname{ht} \mathfrak{m}/\mathfrak{p} : \mathfrak{p} \in \operatorname{Spec}(R) \setminus \operatorname{Var}(\mathfrak{b})\right\}.\end{aligned}$$

Let $i \in \mathbb{N}_0$. Observe that, by 7.2.11(ii), $\mathfrak{b} \nsubseteq \sqrt{(0 : H^i_{\mathfrak{m}}(M))}$ if and only if there exists $\mathfrak{p} \in \mathring{\operatorname{Att}}_R(H^i_{\mathfrak{m}}(M)) \setminus \operatorname{Var}(\mathfrak{b})$, that is, if and only if there exists $\mathfrak{p} \in \left(\min \mathring{\operatorname{Att}}_R(H^i_{\mathfrak{m}}(M))\right) \setminus \operatorname{Var}(\mathfrak{b})$ (with the notation of 11.3.12). Hence $f^{\mathfrak{b}}_{\mathfrak{m}}(M)$, if finite, is equal to the least integer i for which the set

$$\left(\min \mathring{\operatorname{Att}}_R(H^i_{\mathfrak{m}}(M))\right) \setminus \overline{\bigcup_{j=0}^{i-1} \operatorname{Att}_R(H^j_{\mathfrak{m}}(M))}$$

contains a prime outside $\operatorname{Var}(\mathfrak{b})$. It therefore follows from Theorem 11.3.12 that

$f^{\mathrm{b}}_{\mathfrak{m}}(M) = \lambda^{\mathrm{b}}_{\mathfrak{m}}(M)$; this is the conclusion of Faltings' Annihilator Theorem 9.5.1 in this special case.

11.3.14 Exercise. This exercise shows that if, in Corollary 11.3.5, the hypothesis that the local ring $(R, \mathfrak{m})$ be a homomorphic image of a Gorenstein local ring is dropped, then the corresponding statement is no longer always true. At the same time, we shall show that the Shifted Localization Principle 11.3.2 is not true for all local rings.

For a counterexample, suppose that $(R, \mathfrak{m})$ is a 2-dimensional local domain whose completion $(\widehat{R}, \widehat{\mathfrak{m}})$ possesses an embedded prime ideal $\mathfrak{P}$ (associated to its zero ideal). Such an example has been constructed by D. Ferrand and M. Raynaud in [14]. Use Exercises 11.3.9 and 11.3.7 to prove that $0 \in \mathrm{Att}(H^1_{\mathfrak{m}}(R))$, and deduce that the result of Corollary 11.3.5 is not true for all local rings.

Show also that, for each $\mathfrak{p} \in \mathrm{Spec}(R)$ having $\dim R/\mathfrak{p} = 1$,

$$0R_{\mathfrak{p}} \notin \mathrm{Att}_{R_{\mathfrak{p}}}\left(H^0_{\mathfrak{p}R_{\mathfrak{p}}}(R_{\mathfrak{p}})\right).$$

Deduce that the Shifted Localization Principle 11.3.2 is not true for all local rings. (The Weak General Shifted Localization Principle 11.3.8 shows that one of the implications in 11.3.2 does remain true in general.)

12

Foundations in the graded case

If our Noetherian ring R is ($\mathbb{Z}$-)graded, and our ideal $\mathfrak{a}$ is graded, then it is natural to ask whether the local cohomology modules $H^i_{\mathfrak{a}}(R)$ ($i \in \mathbb{N}_0$), and $H^i_{\mathfrak{a}}(M)$ ($i \in \mathbb{N}_0$) for a graded R-module M, also carry structures as graded R-modules. Some of the realizations of these local cohomology modules that we have obtained earlier in the book suggest that they should. For instance, if $a_1, \ldots, a_n$ (where $n > 0$) denote n *homogeneous* elements which generate $\mathfrak{a}$, then the Čech complex $C^\bullet(M)$ of M with respect to $a_1, \ldots, a_n$ is composed of graded R-modules and homogeneous homomorphisms, and so $H^i_{\mathfrak{a}}(M)$ (for $i \in \mathbb{N}_0$), which, by Theorem 5.1.19, is isomorphic to $H^i(C(M)^\bullet)$, inherits a grading. But is this grading independent of the choice of homogeneous generators for $\mathfrak{a}$?

More hopeful evidence is provided by the isomorphism

$$H^i_{\mathfrak{a}}(M) \cong \varinjlim_{n \in \mathbb{N}} \operatorname{Ext}^i_R(R/\mathfrak{a}^n, M)$$

of 1.3.8. For each $n \in \mathbb{N}$, since $R/\mathfrak{a}^n$ is a finitely generated graded R-module, $\operatorname{Ext}^i_R(R/\mathfrak{a}^n, M)$ is actually the graded R-module $^*\operatorname{Ext}^i_R(R/\mathfrak{a}^n, M)$ (see [6, pp. 32-33]) with its grading forgotten, and, for $n, m \in \mathbb{N}$ with $n \geq m$, the natural homomorphism $h^n_m : R/\mathfrak{a}^n \to R/\mathfrak{a}^m$ is homogeneous, so that the induced homomorphism

$$^*\operatorname{Ext}^i_R(h^n_m, M) : {}^*\operatorname{Ext}^i_R(R/\mathfrak{a}^m, M) \longrightarrow {}^*\operatorname{Ext}^i_R(R/\mathfrak{a}^n, M)$$

is homogeneous; hence $\varinjlim_{n \in \mathbb{N}} \operatorname{Ext}^i_R(R/\mathfrak{a}^n, M)$ is graded, and $H^i_{\mathfrak{a}}(M)$ inherits a grading by virtue of the above isomorphism. But is this grading the same as that which comes from the approach using the Čech complex described in the preceding paragraph?

One could take another approach to local cohomology in this graded situation, an approach which, at first sight, seems substantially different from those

described in the preceding two paragraphs. Again suppose that our Noetherian ring R is ($\mathbb{Z}$-)graded, and our ideal $\mathfrak{a}$ is graded. The category $^*\mathscr{C}(R)$ of all graded R-modules and homogeneous R-homomorphisms is an Abelian category which has enough projective objects [6, p. 32] and enough injective objects [6, 3.6.2]: we can therefore carry out standard techniques of homological algebra in this category. In particular, the $\mathfrak{a}$-torsion functor $\Gamma_{\mathfrak{a}}$ can be viewed as a (left exact, additive) functor from $^*\mathscr{C}(R)$ to itself, and so we can form its right derived functors $^*H^i_{\mathfrak{a}}$ ($i \in \mathbb{N}_0$) on that category. This will produce, for a graded R-module M, graded local cohomology modules $^*H^i_{\mathfrak{a}}(M)$ ($i \in \mathbb{N}_0$), which are constructed by the following procedure. Since $^*\mathscr{C}(R)$ has enough injectives, we can construct an injective resolution of M in this category, that is, we can construct an exact sequence

$$0 \longrightarrow M \xrightarrow{\alpha} E^0 \xrightarrow{d^0} E^1 \longrightarrow \cdots \longrightarrow E^i \xrightarrow{d^i} E^{i+1} \longrightarrow \cdots$$

in $^*\mathscr{C}(R)$ in which the E^i ($i \in \mathbb{N}_0$) are injective objects in that category, that is, they are *injective graded R-modules in the terminology of [6, §3.6]; then we apply the functor $\Gamma_{\mathfrak{a}}$ to the complex

$$0 \longrightarrow E^0 \xrightarrow{d^0} E^1 \longrightarrow \cdots \longrightarrow E^i \xrightarrow{d^i} E^{i+1} \longrightarrow \cdots ;$$

the i-th cohomology module of the resulting complex is $^*H^i_{\mathfrak{a}}(M)$ (for each $i \in \mathbb{N}_0$). But if we forget the grading on $^*H^i_{\mathfrak{a}}(M)$, is the resulting R-module isomorphic to $H^i_{\mathfrak{a}}(M)$, and, if so, is the grading on $H^i_{\mathfrak{a}}(M)$ induced by this isomorphism the same as that which comes from the approaches in the first two paragraphs of this chapter?

Our main purpose in this chapter is to reconcile these various approaches. We think it is desirable that it should be established that they all give (up to isomorphism in $^*\mathscr{C}(R)$) the same object of $^*\mathscr{C}(R)$. Thus we are going to show that the questions posed at the ends of the first three paragraphs of this chapter all have affirmative answers.

12.1 *Injective modules

12.1.1 Notation and Terminology. When we write about a *graded* ring or module, it is to be always understood that the grading is by $\mathbb{Z}$. (Of course, positively graded rings and modules are covered by this.) Also, when we write that $R = \bigoplus_{n\in\mathbb{Z}} R_n$ is a graded ring, it is to be understood that the direct decomposition is as $\mathbb{Z}$-module and that $R_nR_m \subseteq R_{n+m}$ for all $n, m \in \mathbb{Z}$; the corresponding comment applies to graded modules.

We shall use the notation and terminology about graded commutative Noetherian rings and graded modules over them employed by Bruns and Herzog in [6, §1.5 and §3.6], except that, when our ring R is graded, we shall use $^*\mathscr{C}(R)$ to denote the category of all graded R-modules and homogeneous R-homomorphisms. We shall from time to time quote without proof some results from the beginnings of the two cited sections of [6]. When R is graded, we shall use $^*\operatorname{Spec}(R)$ to denote the set of graded prime ideals of R and, for $t \in \mathbb{Z}$, we shall denote the *t-th shift functor* by $(\,\cdot\,)(t) : {}^*\mathscr{C}(R) \longrightarrow {}^*\mathscr{C}(R)$: thus, for a graded R-module $M = \bigoplus_{n\in\mathbb{Z}} M_n$, we have $(M(t))_n = M_{n+t}$ for all $n \in \mathbb{Z}$; also, $f(t)\restriction_{(M(t))_n} = f\restriction_{M_{n+t}}$ for each morphism f in $^*\mathscr{C}(R)$ and all $n \in \mathbb{Z}$. Note also that, if $N = \bigoplus_{n\in\mathbb{Z}} N_n$ is a second graded R-module, then $M \otimes_R N$ is again a graded R-module: for $n \in \mathbb{Z}$, the n-th homogeneous component $(M \otimes_R N)_n$ is generated, as $\mathbb{Z}$-module, by the elements $a \otimes b$ with $a \in M_i$, $b \in N_j$ and $i + j = n$. See [6, 1.5.19].

It is perhaps worth pointing out that the use in the introduction to this chapter of concepts from Abelian category theory in connection with $^*\mathscr{C}(R)$ does not cause much complication for us: if $f : M \to N$ is a morphism in $^*\mathscr{C}(R)$ (that is, if M and N are graded R-modules and f is a homogeneous R-homomorphism), then the ordinary kernel and image of f are graded submodules of M and N respectively, and act as $\operatorname{Ker} f$ and $\operatorname{Im} f$ in $^*\mathscr{C}(R)$; also, a sequence $M \longrightarrow N \longrightarrow P$ of objects and morphisms in $^*\mathscr{C}(R)$ is exact in that category if and only if it is exact in $\mathscr{C}(R)$.

A word of caution is appropriate. For a graded R-module N, Bruns and Herzog define, for $i \in \mathbb{N}_0$, $^*\operatorname{Ext}^i_R(\,\cdot\,, N)$ to be the i-th right derived functor in $^*\mathscr{C}(R)$ of $^*\operatorname{Hom}_R(\,\cdot\,, N)$. As indicated above, we shall follow this 'first variable only' usage; we shall also try to avoid excessive involvement with the homological algebra of the category $^*\mathscr{C}(R)$. There are occasional drawbacks to this approach: for example, part (i) of the lemma below actually has to be proved!

12.1.2 Lemma. *Assume that R is graded, and let I, M be graded R-modules with I *injective.*

(i) *We have* $^*\operatorname{Ext}^i_R(M, I) = 0$ *for all* $i \in \mathbb{N}$.

(ii) *If M is finitely generated, then* $\operatorname{Ext}^i_R(M, I) = 0$ *for all* $i \in \mathbb{N}$.

Proof. (i) There is a *projective R-module F and a homogeneous R-epimorphism $\psi : F \longrightarrow M$; let $K := \operatorname{Ker}\psi$. Since F is *projective, $^*\operatorname{Ext}^i_R(F, I) = 0$ for all $i \in \mathbb{N}$. The exact sequence

$$0 \longrightarrow K \longrightarrow F \xrightarrow{\psi} M \longrightarrow 0$$

therefore induces an exact sequence

$$0 \to {}^*\mathrm{Hom}_R(M,I) \to {}^*\mathrm{Hom}_R(F,I) \to {}^*\mathrm{Hom}_R(K,I) \to {}^*\mathrm{Ext}^1_R(M,I) \to 0$$

(in the category $^*\mathscr{C}(R)$) and homogeneous isomorphisms ${}^*\mathrm{Ext}^i_R(K,I) \cong {}^*\mathrm{Ext}^{i+1}_R(M,I)$ for all $i \in \mathbb{N}$.

The induced homomorphism ${}^*\mathrm{Hom}_R(F,I) \longrightarrow {}^*\mathrm{Hom}_R(K,I)$ is surjective because I is *injective. Hence ${}^*\mathrm{Ext}^1_R(M,I) = 0$. But M was an arbitrary graded R-module; therefore ${}^*\mathrm{Ext}^1_R(K,I) = 0$, and so ${}^*\mathrm{Ext}^2_R(M,I) = 0$. A simple inductive argument will complete the proof of part (i).

(ii) This is now immediate, since if, for finitely generated M, we forget the grading on ${}^*\mathrm{Ext}^i_R(M,I)$, then we obtain the ordinary 'Ext' module $\mathrm{Ext}^i_R(M,I)$ (see [6, pp. 32-33]). □

Lemma 12.1.2 already enables us to prove the following result, which will play a key rôle in this chapter.

12.1.3 Proposition. *Assume that R is graded and that the ideal $\mathfrak{a}$ is graded. Let I be a *injective graded R-module. Then I is $\Gamma_{\mathfrak{a}}$-acyclic.*

Proof. For each $n \in \mathbb{N}$, the graded R-module $R/\mathfrak{a}^n$ is finitely generated, and so $\mathrm{Ext}^i_R(R/\mathfrak{a}^n, I) = 0$ for all $i \in \mathbb{N}$, by 12.1.2. Hence

$$H^i_{\mathfrak{a}}(I) \cong \varinjlim_{n\in\mathbb{N}} \mathrm{Ext}^i_R(R/\mathfrak{a}^n, I) = 0 \qquad \text{for all } i \in \mathbb{N}. \ \square$$

The following exercise establishes a graded analogue of the well-known Baer Criterion (see [52, Theorem 3.20]) for a module to be injective.

12.1.4 ♯Exercise. Assume that R is graded, and let I be a graded R-module. Show that I is *injective if and only if, for each graded ideal $\mathfrak{b}$ of R, each $i \in \mathbb{Z}$ and each homogeneous homomorphism $f : \mathfrak{b} \longrightarrow I$ of degree i, there exists a homogeneous homomorphism $f' : R \longrightarrow I$ of degree i such that $f'\lceil_{\mathfrak{b}} = f$.

We made use of the (ungraded) Baer Criterion in our proof of Proposition 2.1.4, and the graded version in the above exercise can be used in a similar way to establish a graded version of that proposition. This is the subject of the next exercise.

12.1.5 ♯Exercise. Assume that R is graded and that the ideal $\mathfrak{a}$ is graded. Let I be a *injective graded R-module. Show that $\Gamma_{\mathfrak{a}}(I)$ is *injective.

12.1.6 Remark. Assume that R is graded.

In this chapter, much use will be made of the concepts of negative connected sequence (and negative strongly connected sequence) of covariant functors from $^*\mathscr{C}(R)$ to $^*\mathscr{C}(R')$, where R' is a commutative graded ring. These concepts, and the concepts of homomorphisms and isomorphisms between such sequences, are defined by making the obvious modifications to the definitions in 1.3.1 and 1.3.3. We shall leave the detailed formulations to the reader, but we do stress that, if $(T^i)_{i\in\mathbb{N}_0}$ is a negative connected sequence of covariant functors from $^*\mathscr{C}(R)$ to $^*\mathscr{C}(R')$, and $0 \longrightarrow L \xrightarrow{f} M \xrightarrow{g} N \longrightarrow 0$ is an exact sequence in $^*\mathscr{C}(R)$, then not only are the induced homomorphisms $T^i(f) : T^i(L) \longrightarrow T^i(M)$ $(i \in \mathbb{N}_0)$ and $T^i(g) : T^i(M) \longrightarrow T^i(N)$ $(i \in \mathbb{N}_0)$ homogeneous, but all the connecting homomorphisms $T^i(N) \longrightarrow T^{i+1}(L)$ $(i \in \mathbb{N}_0)$ are homogeneous too.

For the reader's benefit, we include an exercise to cover the existence of an isomorphism between connected sequences in certain circumstances: the reader should be able to solve it by imitating the techniques he or she used for 1.3.4.

12.1.7 ♯Exercise. Assume that R is graded, and let R' be a commutative graded ring. Let $(T^i)_{i\in\mathbb{N}_0}$ and $(U^i)_{i\in\mathbb{N}_0}$ be negative connected sequences of covariant functors from $^*\mathscr{C}(R)$ to $^*\mathscr{C}(R')$.

(i) Let $\psi^0 : T^0 \longrightarrow U^0$ be a natural transformation of functors. Assume that

(a) the sequence $(T^i)_{i\in\mathbb{N}_0}$ is strongly connected, and

(b) $T^i(I) = 0$ for all $i \in \mathbb{N}$ and all *injective graded R-modules I.

Show that there exist uniquely determined natural transformations $\psi^i : T^i \to U^i$ $(i \in \mathbb{N})$ such that $(\psi^i)_{i\in\mathbb{N}_0} : (T^i)_{i\in\mathbb{N}_0} \longrightarrow (U^i)_{i\in\mathbb{N}_0}$ is a homomorphism of connected sequences.

(ii) Now let $\psi^0 : T^0 \longrightarrow U^0$ be a natural equivalence of functors. Assume that

(a) the sequence $(T^i)_{i\in\mathbb{N}_0}$ is strongly connected,

(b) the sequence $(U^i)_{i\in\mathbb{N}_0}$ is strongly connected, and

(c) for all *injective graded R-modules I and all $i \in \mathbb{N}$, we have

$$T^i(I) = U^i(I) = 0.$$

Show that there exist uniquely determined natural equivalences $\psi^i : T^i \to U^i$ $(i \in \mathbb{N})$ such that $(\psi^i)_{i\in\mathbb{N}_0} : (T^i)_{i\in\mathbb{N}_0} \longrightarrow (U^i)_{i\in\mathbb{N}_0}$ is an isomorphism of connected sequences.

12.2 The *restriction property

12.2.1 Definition. Assume that R is graded, and let R' be a commutative graded ring.

Let $T : \mathscr{C}(R) \longrightarrow \mathscr{C}(R')$ be a covariant functor. If

(i) whenever M is a graded R-module, the R'-module $T(M)$ is graded, and

(ii) the gradings in (i) are such that, whenever $f : M \to N$ is a homogeneous homomorphism of graded R-modules, then $T(f) : T(M) \to T(N)$ is homogeneous,

then we say that T *has the *restriction property* (with respect to the gradings specified in (i)).

Of course, the restriction of T to $^*\mathscr{C}(R)$ is a functor $T\lceil : {}^*\mathscr{C}(R) \longrightarrow \mathscr{C}(R')$. (We should, strictly speaking, denote $T\lceil$ by $T\lceil_{^*\mathscr{C}(R)}$, but we shall use the shorter notation in the interests of simplicity.) Note that T has the *restriction property if and only if $T\lceil$ can be viewed as a functor from $^*\mathscr{C}(R)$ to $^*\mathscr{C}(R')$.

12.2.2 Example and Definition. Assume that R is graded, and that the ideal $\mathfrak{a}$ is graded. For a graded R-module M, the submodule $\Gamma_{\mathfrak{a}}(M) = \bigcup_{n\in\mathbb{N}}(0 :_M \mathfrak{a}^n)$ is graded, and $\Gamma_{\mathfrak{a}}$ has the *restriction property. Thus $\Gamma_{\mathfrak{a}}\lceil$ can be viewed as a (left exact, additive) functor from $^*\mathscr{C}(R)$ to itself. Since $^*\mathscr{C}(R)$ has enough injectives, we can form the right derived functors $^*H^i_{\mathfrak{a}}$ ($i \in \mathbb{N}_0$) of $\Gamma_{\mathfrak{a}}\lceil$ on that category, as explained in the third paragraph of the introduction to this chapter.

Then $(^*H^i_{\mathfrak{a}})_{i\in\mathbb{N}_0}$ is an example of a negative strongly connected sequence of covariant functors from $^*\mathscr{C}(R)$ to itself.

12.2.3 Definition. Assume that R is graded, and let R' be a commutative graded ring.

Let $T, U : \mathscr{C}(R) \longrightarrow \mathscr{C}(R')$ be covariant functors. Let $\alpha : T \longrightarrow U$ be a natural transformation of functors (from $\mathscr{C}(R)$ to $\mathscr{C}(R')$). Of course, the restriction of α to $^*\mathscr{C}(R)$ provides a natural transformation $\alpha\lceil : T\lceil \longrightarrow U\lceil$ of functors from $^*\mathscr{C}(R)$ to $\mathscr{C}(R')$.

Now assume that both T and U have the *restriction property. We say that α *has the *restriction property* precisely when, for every graded R-module M, the R'-homomorphism $\alpha_M : T(M) \longrightarrow U(M)$ is homogeneous.

Note that this is the case if and only if $\alpha\lceil$ can be viewed as a natural transformation $\alpha\lceil : T\lceil \longrightarrow U\lceil$ of functors from $^*\mathscr{C}(R)$ to $^*\mathscr{C}(R')$.

12.2.4 Remark. Observe that, if, in the notation of 12.2.3, $\alpha : T \longrightarrow U$ is a natural equivalence of functors which has the *restriction property, then the inverse natural equivalence $\alpha^{-1} : U \longrightarrow T$ also has the *restriction property.

Note also that, if $V : \mathscr{C}(R) \longrightarrow \mathscr{C}(R')$ is a third covariant functor having the *restriction property, and both α and a natural transformation $\beta : U \longrightarrow V$ have the *restriction property, then the composition $\beta \circ \alpha : T \longrightarrow V$ again has the *restriction property.

12.2.5 Definition. Assume that R is graded, and let R' be a commutative graded ring.

Let $(T^i)_{i\in\mathbb{N}_0}$ be a negative strongly connected sequence of covariant functors from $\mathscr{C}(R)$ to $\mathscr{C}(R')$. We can regard $(T^i\lceil)_{i\in\mathbb{N}_0}$ as a negative strongly connected sequence of covariant functors from $^*\mathscr{C}(R)$ to $\mathscr{C}(R')$.

We shall say that $(T^i)_{i\in\mathbb{N}_0}$ *has the *restriction property* precisely when

(i) T^i has the *restriction property for all $i \in \mathbb{N}_0$; and

(ii) whenever $0 \longrightarrow L \longrightarrow M \longrightarrow N \longrightarrow 0$ is an exact sequence in the 'graded' category $^*\mathscr{C}(R)$, the connecting homomorphisms $T^i(N) \longrightarrow T^{i+1}(L)$ ($i \in \mathbb{N}_0$) (which exist by virtue of the fact that $(T^i)_{i\in\mathbb{N}_0}$ is a connected sequence) are all homogeneous.

Note that this is the case if and only if $(T^i\lceil)_{i\in\mathbb{N}_0}$ can be viewed as a negative strongly connected sequence of covariant functors from $^*\mathscr{C}(R)$ to $^*\mathscr{C}(R')$.

12.2.6 Definition. Assume that R is graded, and let R' be a commutative graded ring.

Let $(T^i)_{i\in\mathbb{N}_0}$ and $(U^i)_{i\in\mathbb{N}_0}$ be negative strongly connected sequences of covariant functors from $\mathscr{C}(R)$ to $\mathscr{C}(R')$, and assume that both these sequences have the *restriction property of 12.2.5. Let $\Psi := (\psi^i)_{i\in\mathbb{N}_0} : (T^i)_{i\in\mathbb{N}_0} \longrightarrow (U^i)_{i\in\mathbb{N}_0}$ be a homomorphism of connected sequences. We say that Ψ *has the *restriction property* if and only if, for all $i \in \mathbb{N}_0$, the natural transformation ψ^i has the *restriction property of 12.2.3.

The next proposition will enable us to present an important example of a negative strongly connected sequence of covariant functors from $\mathscr{C}(R)$ to $\mathscr{C}(R)$ which, when R is graded, has the *restriction property.

12.2.7 Proposition. *Assume that R is graded; let G, M be graded R-modules with G finitely generated. By* [6, pp. 32-33], *for each $i \in \mathbb{N}_0$, $\mathrm{Ext}^i_R(G, M)$ is actually the graded R-module $^*\mathrm{Ext}^i_R(G, M)$ with its grading forgotten; hence each $\mathrm{Ext}^i_R(G, M)$ has a natural structure as graded R-module, and these structures are such that, if G' is a second finitely generated graded R-module and $h : G \longrightarrow G'$ is a homogeneous homomorphism, then $\mathrm{Ext}^i_R(h, M) : \mathrm{Ext}^i_R(G', M) \longrightarrow \mathrm{Ext}^i_R(G, M)$ is also homogeneous.*

Moreover, with respect to these graded R-module structures, the negative

strongly connected sequence $\left(\mathrm{Ext}^i_R(G, \bullet)\right)_{i\in\mathbb{N}_0}$ *of covariant functors (from* $\mathscr{C}(R)$ *to itself) has the *restriction property (see* 12.2.5*).*

Proof. Only the claim in the second paragraph requires proof. Let $P_\bullet$ be a *projective resolution of G in $^*\mathscr{C}(R)$ such that each term in $P_\bullet$ is, as R-module, finitely generated and free.

An exact sequence $0 \longrightarrow L' \longrightarrow M' \longrightarrow N' \longrightarrow 0$ in $\mathscr{C}(R)$ induces a sequence

$$0 \longrightarrow \mathrm{Hom}_R(P_\bullet, L') \longrightarrow \mathrm{Hom}_R(P_\bullet, M') \longrightarrow \mathrm{Hom}_R(P_\bullet, N') \longrightarrow 0$$

of complexes of R-modules and chain maps of such complexes such that, for each $i \in \mathbb{N}_0$, the sequence

$$0 \longrightarrow \mathrm{Hom}_R(P_i, L') \longrightarrow \mathrm{Hom}_R(P_i, M') \longrightarrow \mathrm{Hom}_R(P_i, N') \longrightarrow 0$$

(where P_i denotes the i-th term of $P_\bullet$) is exact. It is straightforward to use the long exact sequences of cohomology modules induced by such sequences of complexes to turn $\left(H^i(\mathrm{Hom}_R(P_\bullet, \bullet))\right)_{i\in\mathbb{N}_0}$ into a negative strongly connected sequence of covariant functors from $\mathscr{C}(R)$ to itself, and a standard application of Exercise 1.3.4(ii) then shows that this negative connected sequence is isomorphic to $\left(\mathrm{Ext}^i_R(G, \bullet)\right)_{i\in\mathbb{N}_0}$.

In particular, when we apply this to a morphism $f : M \longrightarrow M'$ in $^*\mathscr{C}(R)$, and to an exact sequence $0 \longrightarrow L \longrightarrow M \longrightarrow N \longrightarrow 0$ of graded R-modules and homogeneous R-homomorphisms, there result, for each $i \in \mathbb{N}_0$, commutative diagrams

$$\begin{tikzcd}
H^i(\mathrm{Hom}_R(P_\bullet, M)) \arrow[r] \arrow[d, "\cong"'] & H^i(\mathrm{Hom}_R(P_\bullet, M')) \arrow[d, "\cong"] \\
\mathrm{Ext}^i_R(G, M) \arrow[r, "\mathrm{Ext}^i_R(G,f)"] & \mathrm{Ext}^i_R(G, M')
\end{tikzcd}$$

and

$$\begin{tikzcd}
H^i(\mathrm{Hom}_R(P_\bullet, N)) \arrow[r] \arrow[d, "\cong"'] & H^{i+1}(\mathrm{Hom}_R(P_\bullet, L)) \arrow[d, "\cong"] \\
\mathrm{Ext}^i_R(G, N) \arrow[r] & \mathrm{Ext}^{i+1}_R(G, L)
\end{tikzcd}$$

In these circumstances, $\mathrm{Hom}_R(P_\bullet, M)$, $\mathrm{Hom}_R(P_\bullet, M')$, $\mathrm{Hom}_R(P_\bullet, N)$ and $\mathrm{Hom}_R(P_\bullet, L)$ are complexes of graded R-modules and homogeneous R-homomorphisms, so that all their cohomology modules are graded, and it

is easy to check that the top horizontal homomorphisms in the above two commutative diagrams are homogeneous. Furthermore, the graded module structures on $\mathrm{Ext}^i_R(G, M)$, $\mathrm{Ext}^i_R(G, M')$, $\mathrm{Ext}^i_R(G, N)$ and $\mathrm{Ext}^{i+1}_R(G, L)$ induced by the vertical isomorphisms in the diagrams are precisely the graded module structures referred to in the first paragraph of the statement of the proposition. All the claims follow easily from these observations. □

12.2.8 Remark. Assume that R is graded. Let $(\Lambda, \leq)$ be a (non-empty) directed partially ordered set, and let $(W_\alpha)_{\alpha\in\Lambda}$ be a direct system of graded R-modules and homogeneous R-homomorphisms over Λ, with constituent R-homomorphisms $h^\alpha_\beta : W_\beta \to W_\alpha$ (for each $(\alpha, \beta) \in \Lambda \times \Lambda$ with $\alpha \geq \beta$). We can forget the gradings and calculate the ordinary direct limit

$$W_\infty := \varinjlim_{\alpha\in\Lambda} W_\alpha,$$

in $\mathscr{C}(R)$: let $h_\alpha : W_\alpha \to W_\infty$ be the canonical map (for each $\alpha \in \Lambda$). It should be noted that W_∞ inherits a natural grading, for which all the h_α ($\alpha \in \Lambda$) are homogeneous, and that W_∞ actually acts as the direct limit of the direct system $(W_\alpha)_{\alpha\in\Lambda}$ in the category $^*\mathscr{C}(R)$.

12.2.9 Examples. Assume that R is graded and that the ideal $\mathfrak{a}$ is graded.

(i) For $n, m \in \mathbb{N}$ with $n \geq m$, the natural homomorphism $h^n_m : R/\mathfrak{a}^n \to R/\mathfrak{a}^m$ is homogeneous. It follows from 12.2.7 and 12.2.8 that the negative strongly connected sequence of covariant functors

$$\left(\varinjlim_{n\in\mathbb{N}} \mathrm{Ext}^i_R(R/\mathfrak{a}^n, \,\cdot\,)\right)_{i\in\mathbb{N}_0}$$

from $\mathscr{C}(R)$ to itself has the *restriction property.

(ii) Let $a_1, \ldots, a_n$ (where $n > 0$) denote n homogeneous elements which generate $\mathfrak{a}$. Let $C^\bullet$ denote the Čech complex of R with respect to $a_1, \ldots, a_n$, as in 5.1.5. Then it is straightforward to check that the negative strongly connected sequence of covariant functors $(H^i((\,\cdot\,) \otimes_R C^\bullet))_{i\in\mathbb{N}_0}$ from $\mathscr{C}(R)$ to itself has the *restriction property.

12.2.10 ♯Exercise. Assume that R is graded, and that the ideal $\mathfrak{a}$ is graded. Show that the functor $D_\mathfrak{a}$ and the natural transformation η of 2.2.4(i)(c) have the *restriction property.

12.3 The reconciliation

Our first theorem in this section will enable us to answer quickly the various questions raised in the introduction to this chapter.

12.3.1 Theorem. *Assume that R is graded, and let R' be a commutative graded ring.*

*Let $(T^i)_{i\in\mathbb{N}_0}$ be a negative strongly connected sequence of covariant additive functors from $\mathscr{C}(R)$ to $\mathscr{C}(R')$. Suppose that, for each graded R-module M, a grading is given on $T^0(M)$, and that, with respect to these gradings, T^0 has the *restriction property. Suppose further that $T^i(I) = 0$ for all $i \in \mathbb{N}$ whenever I is a *injective graded R-module.*

*Then there is exactly one choice of gradings on the $T^i(M)$ ($i \in \mathbb{N}$, M a graded R-module) with respect to which $(T^i)_{i\in\mathbb{N}_0}$ has the *restriction property.*

Furthermore, if we denote by $*T^0 : *\mathscr{C}(R) \longrightarrow *\mathscr{C}(R')$ the (necessarily left exact) functor induced by $T^0\lceil$ (see 12.2.1), then there is a unique isomorphism

$$(\psi^i)_{i\in\mathbb{N}_0} : (T^i\lceil)_{i\in\mathbb{N}_0} \xrightarrow{\cong} (\mathscr{R}^i(*T^0))_{i\in\mathbb{N}_0}$$

of negative strongly connected sequences of covariant functors from $*\mathscr{C}(R)$ to $*\mathscr{C}(R')$ for which $\psi^0 : T^0\lceil = *T^0 \longrightarrow \mathscr{R}^0(*T^0)$ is the canonical natural equivalence.

Proof. We first show, by induction on $t \in \mathbb{N}_0$, that, if $(T^i)_{i\in\mathbb{N}_0}$ has the *restriction property, then the gradings on the R'-modules $T^t(M)$ (M a graded R-module) are uniquely determined by the gradings on the R'-modules $T^0(L)$ (L a graded R-module). This statement is certainly true when $t = 0$, and so we suppose now that $t > 0$ and the statement is true for smaller values of t.

Let M be an arbitrary graded R-module. Since the category $*\mathscr{C}(R)$ has enough injective objects, there is an exact sequence

$$0 \longrightarrow M \longrightarrow I \xrightarrow{g} N \longrightarrow 0$$

in $*\mathscr{C}(R)$ with I a *injective graded R-module. The hypotheses and the assumption that $(T^i)_{i\in\mathbb{N}_0}$ has the *restriction property therefore lead to an exact sequence

$$T^{t-1}(I) \xrightarrow{T^{t-1}(g)} T^{t-1}(N) \longrightarrow T^t(M) \longrightarrow 0$$

of graded R'-modules and homogeneous homomorphisms. Since, by the inductive hypothesis, the grading on $T^{t-1}(N)$ is uniquely determined by our assumptions, it follows that the grading on $T^t(M)$ is similarly uniquely determined.

Thus there is at most one choice of gradings on the $T^i(M)$ ($i \in \mathbb{N}$, M a graded R-module) with respect to which $(T^i)_{i\in\mathbb{N}_0}$ has the *restriction property. We still have to show that there is one such choice.

Since $(T^i)_{i\in\mathbb{N}_0}$ is a negative strongly connected sequence of covariant functors from $\mathscr{C}(R)$ to $\mathscr{C}(R')$, it is automatic that T^0 is left exact. Therefore $*T^0 : *\mathscr{C}(R) \longrightarrow *\mathscr{C}(R')$ is left exact (and additive), $(\mathscr{R}^i(*T^0))_{i\in\mathbb{N}_0}$ is a negative strongly connected sequence of covariant functors from $*\mathscr{C}(R)$ to $*\mathscr{C}(R')$, and there is a canonical natural equivalence $\psi^0 : T^0\lceil = *T^0 \longrightarrow \mathscr{R}^0(*T^0)$. Note that ψ^0_M is homogeneous for each graded R-module M.

Now forget, temporarily, the grading on R': then $(\mathscr{R}^i(*T^0))_{i\in\mathbb{N}_0}$ and $(T^i\lceil)_{i\in\mathbb{N}_0}$ are negative strongly connected sequences of covariant functors from $*\mathscr{C}(R)$ to $\mathscr{C}(R')$ and $\psi^0 : T^0\lceil \longrightarrow \mathscr{R}^0(*T^0)$ is a natural equivalence (of functors from $*\mathscr{C}(R)$ to $\mathscr{C}(R')$). Moreover, $T^i(I) = \mathscr{R}^i(*T^0)(I) = 0$ for all $i \in \mathbb{N}$ and all *injective graded R-modules I.

At this point, regard, again temporarily, R' as trivially graded (see [6. 1.5.3(b)]): we can use 12.1.7(ii) to see that there exist uniquely determined natural equivalences $\psi^i : T^i\lceil \longrightarrow \mathscr{R}^i(*T^0)$ ($i \in \mathbb{N}$) such that $(\psi^i)_{i\in\mathbb{N}_0} : (T^i\lceil)_{i\in\mathbb{N}_0} \longrightarrow (\mathscr{R}^i(*T^0))_{i\in\mathbb{N}_0}$ is an isomorphism of connected sequences (of functors from $*\mathscr{C}(R)$ to $\mathscr{C}(R')$).

Now remember the original gradings on R' and its graded modules: for each graded R-module M and each $i \in \mathbb{N}$, the R'-module $\mathscr{R}^i(*T^0)(M)$ is graded. For such i and M, we can define a grading on $T^i(M)$ in such a way that the R'-isomorphism $\psi^i_M : T^i(M) \xrightarrow{\cong} \mathscr{R}^i(*T^0)(M)$ is homogeneous. With these gradings in place, all the remaining claims of the theorem follow routinely. $\square$

We now draw corollaries from Theorem 12.3.1 which enable us to answer questions raised in the introduction to this chapter. In them, we identify a left exact functor with its 0-th right derived functor in the canonical way.

12.3.2 Corollary. *Assume that R is graded, and let R' be a commutative graded ring.*

*Let T be a left exact additive covariant functor from $\mathscr{C}(R)$ to $\mathscr{C}(R')$. Suppose that, for each graded R-module M, a grading is given on $T(M)$, and that, with respect to these gradings, T has the *restriction property. Suppose further that each *injective graded R-module I is T-acyclic, that is, $\mathscr{R}^iT(I) = 0$ for all $i \in \mathbb{N}$.*

*Then there is exactly one choice of gradings on the $\mathscr{R}^iT(M)$ ($i \in \mathbb{N}$, M a graded R-module) with respect to which $(\mathscr{R}^iT)_{i\in\mathbb{N}_0}$ has the *restriction property.*

Furthermore, if we denote by $^*T : {}^*\mathscr{C}(R) \longrightarrow {}^*\mathscr{C}(R')$ *the functor induced by* $T\lceil$, *then there is a unique isomorphism*

$$(\psi^i)_{i\in\mathbb{N}_0} : ((\mathscr{R}^i T)\lceil)_{i\in\mathbb{N}_0} \xrightarrow{\cong} (\mathscr{R}^i({}^*T))_{i\in\mathbb{N}_0}$$

of negative strongly connected sequences of covariant functors from ${}^*\mathscr{C}(R)$ *to* ${}^*\mathscr{C}(R')$ *for which* $\psi^0 : T\lceil = {}^*T \longrightarrow {}^*T$ *is the identity.* □

We now apply Corollary 12.3.2 to $\Gamma_{\mathfrak{a}}$ (in the case where R is graded and $\mathfrak{a}$ is graded). That $\Gamma_{\mathfrak{a}}$ then satisfies the hypotheses of 12.3.2 follows from 12.2.2 and 12.1.3. Recall the notation ${}^*H^i_{\mathfrak{a}}$ ($i \in \mathbb{N}_0$) (introduced in the third paragraph of the introduction to this chapter, and discussed also in 12.2.2) for the right derived functors (in the category ${}^*\mathscr{C}(R)$) of $\Gamma_{\mathfrak{a}}\lceil : {}^*\mathscr{C}(R) \longrightarrow {}^*\mathscr{C}(R)$.

12.3.3 Corollary: comparison of ordinary and graded local cohomology. *Assume that* R *is graded and that the ideal* $\mathfrak{a}$ *is graded.*

There is exactly one choice of gradings on the $H^i_{\mathfrak{a}}(M)$ *(*$i \in \mathbb{N}$, M *a graded* R*-module) with respect to which* $(H^i_{\mathfrak{a}})_{i\in\mathbb{N}_0}$ *has the *restriction property; furthermore, when these gradings are imposed, there is a unique isomorphism*

$$(\widetilde{\psi}^i)_{i\in\mathbb{N}_0} : (H^i_{\mathfrak{a}}\lceil)_{i\in\mathbb{N}_0} \xrightarrow{\cong} ({}^*H^i_{\mathfrak{a}})_{i\in\mathbb{N}_0}$$

of connected sequences of covariant functors from ${}^*\mathscr{C}(R)$ *to itself for which* $\widetilde{\psi}^0$ *is the identity.* □

12.3.4 Remark. In the situation of Corollary 12.3.3, for a graded R-module M, we do, of course, grade the $H^i_{\mathfrak{a}}(M)$ ($i \in \mathbb{N}$) using the unique gradings for which the conclusions of that corollary are satisfied.

We have therefore made some progress towards our aims for this chapter; the next result will enable us to complete the task quickly.

12.3.5 Theorem. *Assume that* R *is graded and that the ideal* $\mathfrak{a}$ *is graded.*

Let $(T^i)_{i\in\mathbb{N}_0}$ *be a negative strongly connected sequence of covariant additive functors from* $\mathscr{C}(R)$ *to itself. Suppose that*

$$\Lambda = (\lambda^i)_{i\in\mathbb{N}_0} : (T^i)_{i\in\mathbb{N}_0} \xrightarrow{\cong} (H^i_{\mathfrak{a}})_{i\in\mathbb{N}_0}$$

is an isomorphism of connected sequences (from $\mathscr{C}(R)$ *to itself). Suppose that, for each graded* R*-module* M, *a grading is given on* $T^0(M)$, *and that, with respect to these gradings,* T^0 *has the *restriction property. Suppose also that* λ^0 *has the *restriction property.*

*Then there is exactly one choice of gradings on the $T^i(M)$ ($i \in \mathbb{N}$, M a graded R-module) with respect to which $(T^i)_{i\in\mathbb{N}_0}$ has the *restriction property; with these gradings (and those of* 12.3.4*) imposed, Λ has the *restriction property of* 12.2.6.

Proof. By 12.1.3, we have $T^i(I) = H^i_{\mathfrak{a}}(I) = 0$ for all $i \in \mathbb{N}$ whenever I is a *injective graded R-module. Therefore, by 12.3.1, there is exactly one choice of gradings on the $T^i(M)$ ($i \in \mathbb{N}$, M a graded R-module) with respect to which $(T^i)_{i\in\mathbb{N}_0}$ has the *restriction property. For each graded R-module M and each $i \in \mathbb{N}$, we can define a grading on $H^i_{\mathfrak{a}}(M)$ in such a way that λ^i_M is homogeneous: it is then automatic that, with respect to *these* gradings, $(H^i_{\mathfrak{a}})_{i\in\mathbb{N}_0}$ has the *restriction property, and so these gradings must be those of 12.3.3 and 12.3.4. All the claims of the theorem now follow easily. □

12.3.6 Remarks. Assume that R is graded and that the ideal $\mathfrak{a}$ is graded.

(i) We apply Theorem 12.3.5 to the isomorphism

$$\Phi_{\mathfrak{a}} = \left(\phi^i_{\mathfrak{a}}\right)_{i\in\mathbb{N}_0} : \left(\varinjlim_{n\in\mathbb{N}} \operatorname{Ext}^i_R(R/\mathfrak{a}^n, \cdot\,)\right)_{i\in\mathbb{N}_0} \xrightarrow{\cong} \left(H^i_{\mathfrak{a}}\right)_{i\in\mathbb{N}_0}$$

of negative strongly connected sequences of functors (from $\mathscr{C}(R)$ to itself) of 1.3.8. It is clear from the definition of $\phi^0_{\mathfrak{a}}$ in 1.2.11(iii) that it has the *restriction property. Hence Theorem 12.3.5 can be applied: there is exactly one choice of gradings (and that was described in 12.2.9(i)) on the $\varinjlim_{n\in\mathbb{N}} \operatorname{Ext}^i_R(R/\mathfrak{a}^n, M)$ ($i \in \mathbb{N}$, M a graded R-module) with respect to which

$$\left(\varinjlim_{n\in\mathbb{N}} \operatorname{Ext}^i_R(R/\mathfrak{a}^n, \cdot\,)\right)_{i\in\mathbb{N}_0}$$

*has the *restriction property; with these gradings, $\Phi_{\mathfrak{a}}$ has the *restriction* property.

(ii) Let $a_1, \ldots, a_n$ (where $n > 0$) denote n homogeneous elements which generate $\mathfrak{a}$. Let $C^\bullet$ denote the Čech complex of R with respect to $a_1, \ldots, a_n$, as in 5.1.5. It is easy to check that Theorem 12.3.5 can be applied to the isomorphism

$$(\gamma^i)_{i\in\mathbb{N}_0} : (H^i((\cdot\,) \otimes_R C^\bullet))_{i\in\mathbb{N}_0} \xrightarrow{\cong} (H^i_{\mathfrak{a}})_{i\in\mathbb{N}_0}$$

of negative strongly connected sequences of functors (from $\mathscr{C}(R)$ to itself) of 5.1.19. The conclusion is that there is exactly one choice of gradings (and that was described in 12.2.9(ii)) on the $H^i(M \otimes_R C^\bullet)$ ($i \in \mathbb{N}$, M a graded R-module) with respect to which $(H^i((\cdot\,) \otimes_R C^\bullet))_{i\in\mathbb{N}_0}$ has the *restriction property; with these gradings, $(\gamma^i)_{i\in\mathbb{N}_0}$ has the *restriction property.

(iii) In short, if we use the isomorphism of connected sequences

$$\Phi_{\mathfrak{a}} = \left(\phi^i_{\mathfrak{a}}\right)_{i\in\mathbb{N}_0} : \left(\varinjlim_{n\in\mathbb{N}} \operatorname{Ext}^i_R(R/\mathfrak{a}^n, \bullet)\right)_{i\in\mathbb{N}_0} \xrightarrow{\cong} \left(H^i_{\mathfrak{a}}\right)_{i\in\mathbb{N}_0}$$

of 1.3.8 to define gradings on the $H^i_{\mathfrak{a}}(M)$ ($i \in \mathbb{N}$) (for a graded R-module M), or if we use the isomorphism of connected sequences

$$(\gamma^i)_{i\in\mathbb{N}_0} : (H^i((\bullet) \otimes_R C^\bullet))_{i\in\mathbb{N}_0} \xrightarrow{\cong} (H^i_{\mathfrak{a}})_{i\in\mathbb{N}_0}$$

of 5.1.19, with *any* choice of homogeneous generators for $\mathfrak{a}$, to define gradings on the $H^i_{\mathfrak{a}}(M)$ ($i \in \mathbb{N}$), the resulting gradings are always the same, and are precisely those with respect to which $(H^i_{\mathfrak{a}})_{i\in\mathbb{N}_0}$ has the *restriction property: see 12.3.3. (Note also that it would make no difference if we used $C(M)^\bullet$, the Čech complex of M with respect to $a_1, \ldots, a_n$, instead of $M \otimes_R C^\bullet$: the constituent isomorphisms in the isomorphism of complexes of 5.1.9 are all homogeneous.) Furthermore, as, when these gradings are imposed, there is a unique isomorphism $(\widetilde{\varphi}^i)_{i\in\mathbb{N}_0} : (H^i_{\mathfrak{a}}\lceil)_{i\in\mathbb{N}_0} \xrightarrow{\cong} (^*H^i_{\mathfrak{a}})_{i\in\mathbb{N}_0}$ of connected sequences of covariant functors from $^*\mathscr{C}(R)$ to itself for which $\widetilde{\varphi}^0$ is the identity (see again 12.3.3), all the questions posed in the introduction to this chapter have been answered affirmatively!

Thus, during the rest of the book, when R is graded and the ideal $\mathfrak{a}$ is graded, we shall, without further ado, utilize the gradings on the $H^i_{\mathfrak{a}}(M)$ whenever M is a graded R-module; for each $n \in \mathbb{Z}$, we shall denote the n-th component of the graded R-module $H^i_{\mathfrak{a}}(M)$ by $H^i_{\mathfrak{a}}(M)_n$. We shall also make much use of the fact that, whenever

$$0 \longrightarrow L \xrightarrow{f} M \xrightarrow{g} N \longrightarrow 0$$

is an exact sequence of graded R-modules and homogeneous homomorphisms, not only are all the terms in the induced long exact sequence of local cohomology modules (with respect to $\mathfrak{a}$) graded, but all the homomorphisms in this sequence, including the connecting homomorphisms, are homogeneous. These are really crucial facts about graded local cohomology.

12.4 Some examples and applications

There will be several instances later in the book where we shall be able to use to good effect our work in this chapter on the reconciliation of various different approaches to graded local cohomology. For instance, in the following example, we show that the Čech complex approach can quickly lead to important information about graded local cohomology over a polynomial ring.

12.4.1 Example. Let R_0 be a commutative Noetherian ring, let $n \in \mathbb{N}$, and let $R := R_0[X_1, \ldots, X_n]$, the ring of polynomials over R_0, graded in the usual way (so that X_i has degree 1, for all $i = 1, \ldots, n$).

We propose to use the Čech complex of R with respect to $X_1, \ldots, X_n$,

$$C^\bullet : 0 \longrightarrow C^0 \xrightarrow{d^0} C^1 \longrightarrow \cdots \longrightarrow C^i \xrightarrow{d^i} C^{i+1} \longrightarrow \cdots \xrightarrow{d^{n-1}} C^n \longrightarrow 0,$$

in conjunction with 12.3.6 above, to calculate the graded R-module

$$H^n_{(X_1,\ldots,X_n)}(R_0[X_1, \ldots, X_n]).$$

There is a homogeneous R-isomorphism between this local cohomology module and

$$R_{X_1 \ldots X_n} / \left(\textstyle\sum_{t=1}^n d^{n-1} \left(R_{X_1 \ldots X_{t-1} X_{t+1} \ldots X_n} \right) \right).$$

Now $R_{X_1 \ldots X_n}$ is a free R_0-module with $\left(X_1^{i_1} \ldots X_n^{i_n} \right)_{(i_1,\ldots,i_n) \in \mathbb{Z}^n}$ as a base; for each $t = 1, \ldots, n$, its R-submodule

$$d^{n-1} \left(R_{X_1 \ldots X_{t-1} X_{t+1} \ldots X_n} \right)$$

is again free as R_0-module, with base $\left(X_1^{i_1} \ldots X_n^{i_n} \right)_{(i_1,\ldots,i_n) \in \mathbb{Z}^n,\ i_t \geq 0}$. Let $-\mathbb{N} := \{n \in \mathbb{Z} : n < 0\}$. It follows that the graded R-module

$$R_{X_1 \ldots X_n} / \left(\textstyle\sum_{t=1}^n d^{n-1} \left(R_{X_1 \ldots X_{t-1} X_{t+1} \ldots X_n} \right) \right)$$

can be considered as a free R_0-module with base

$$\left(X_1^{i_1} \ldots X_n^{i_n} \right)_{(i_1,\ldots,i_n) \in (-\mathbb{N})^n}$$

and R-module structure such that, for $(i_1, \ldots, i_n) \in (-\mathbb{N})^n$ and $t \in \mathbb{N}$ with $1 \leq t \leq n$,

$$X_t(X_1^{i_1} \ldots X_n^{i_n}) = \begin{cases} X_1^{i_1} \ldots X_{t-1}^{i_{t-1}} X_t^{i_t+1} X_{t+1}^{i_{t+1}} \ldots X_n^{i_n} & \text{if} \quad i_t < -1, \\ 0 & \text{if} \quad i_t = -1. \end{cases}$$

Moreover, the grading is such that, for $(i_1, \ldots, i_n) \in (-\mathbb{N})^n$ and $r_0 \in R_0$, the element $r_0 X_1^{i_1} \ldots X_n^{i_n}$ has degree $i_1 + \ldots + i_n$.

We refer to this graded R-module as *the module of inverse polynomials in* $X_1, \ldots, X_n$ *over* R_0, and denote it by $R_0[X_1^-, \ldots, X_n^-]$. To summarize, the Čech complex approach to the calculation of graded local cohomology modules quickly yields a homogeneous $R_0[X_1, \ldots, X_n]$-isomorphism

$$H^n_{(X_1,\ldots,X_n)}(R_0[X_1, \ldots, X_n]) \cong R_0[X_1^-, \ldots, X_n^-].$$

12.4.2 ♯Exercise. Assume that R is graded and that the ideal $\mathfrak{a}$ is graded. By 12.2.10, the natural transformation η of 2.2.4(i)(c) has the *restriction property.

(i) Show that the natural transformation ζ^0 of 2.2.4(i)(c) also has the *restriction property, so that, for each graded R-module M, all the homomorphisms in the exact sequence

$$0 \longrightarrow \Gamma_{\mathfrak{a}}(M) \xrightarrow{\xi_M} M \xrightarrow{\eta_M} D_{\mathfrak{a}}(M) \xrightarrow{\zeta^0_M} H^1_{\mathfrak{a}}(M) \longrightarrow 0$$

are homogeneous.

(ii) Let $e : M \longrightarrow M'$ be a homogeneous homomorphism of graded R-modules such that $\operatorname{Ker} e$ and $\operatorname{Coker} e$ are both $\mathfrak{a}$-torsion. Show that the unique R-homomorphism $\psi' : M' \to D_{\mathfrak{a}}(M)$ for which the diagram

$$\begin{tikzcd} M \arrow[r, "e"] \arrow[dr, "\eta_M"'] & M' \arrow[d, "\psi'"] \\ & D_{\mathfrak{a}}(M) \end{tikzcd}$$

commutes (see 2.2.13) is homogeneous.

12.4.3 ♯Exercise. Assume that R is graded and let a be a homogeneous element of R. Let M be a graded R-module. Show that the isomorphism

$$\omega'_M : D_{Ra}(M) = \varinjlim_{n \in \mathbb{N}} \operatorname{Hom}_R(Ra^n, M) \longrightarrow M_a$$

of 2.2.16 is homogeneous, and deduce that the isomorphism

$$H^1_{Ra}(M) \cong M_a/(M/\Gamma_{Ra}(M))$$

of 2.2.18(i) is also homogeneous.

12.4.4 Exercise. Assume that R is graded and that the ideal $\mathfrak{a}$ is graded. Let $a_1, \ldots, a_n$ (where $n > 0$) denote n homogeneous elements which generate $\mathfrak{a}$. Let $u \in \mathbb{N}$ and let $K(a^u)^\bullet$ denote the Koszul complex of R with respect to $a_1^u, \ldots, a_n^u$, as in 5.2.1.

(i) Show that $K(a^u)^\bullet$ has the structure of a complex of graded R-modules and homogeneous R-homomorphisms in which $e_1 \wedge \ldots \wedge e_n$ has degree 0, the element $1 \in K(a^u)_0$ has degree $-u \sum_{i=1}^n \deg a_i$, and, for $k \in \{1, \ldots, n\}$ with $k < n$ and $i \in \mathscr{I}(k, n)$ (the notation is as in 5.1.4), the degree of $e_{i(1)} \wedge \ldots \wedge e_{i(k)}$ is $-u \sum_{h=1}^{n-k} \deg a_{j(h)}$, where $j \in \mathscr{I}(n-k, n)$ is the n-complement of i (see 5.1.4).

(ii) Let

$$(\delta^i)_{i\in\mathbb{N}_0} : \left(\varinjlim_{u\in\mathbb{N}} H_{n-i}(K(a^u, \cdot)^\bullet)\right)_{i\in\mathbb{N}_0} \xrightarrow{\cong} \left(H^i_{\mathfrak{a}}\right)_{i\in\mathbb{N}_0}$$

be the isomorphism of connected sequences of functors (from $\mathscr{C}(R)$ to itself) of Theorem 5.2.9. Show that $\left(\varinjlim_{u\in\mathbb{N}} H_{n-i}(K(a^u, \cdot)^\bullet)\right)_{i\in\mathbb{N}_0}$ has the *restriction property, and that $(\delta^i)_{i\in\mathbb{N}_0}$ has the *restriction property, so that, for each graded R-module M, the isomorphism

$$\delta^i_M : \varinjlim_{u\in\mathbb{N}} H_{n-i}(K(a^u, M)^\bullet) \xrightarrow{\cong} H^i_{\mathfrak{a}}(M)$$

is homogeneous.

12.4.5 ♯Exercise. Assume that R is graded and that the ideal $\mathfrak{a}$ is graded. It follows from 12.2.10 that $D_{\mathfrak{a}}$ has the *restriction property.

(i) Use 12.2.7 and 12.2.8 to show that the negative strongly connected sequence of covariant functors

$$\left(\varinjlim_{n\in\mathbb{N}} \operatorname{Ext}^i_R(\mathfrak{a}^n, \cdot)\right)_{i\in\mathbb{N}_0}$$

from $\mathscr{C}(R)$ to itself has the *restriction property.

(ii) Recall from 2.2.2 that there is a unique isomorphism of connected sequences (of functors from $\mathscr{C}(R)$ to itself)

$$\Psi_{\mathfrak{a}} = \left(\psi^i_{\mathfrak{a}}\right)_{i\in\mathbb{N}_0} : \left(\mathscr{R}^i D_{\mathfrak{a}}\right)_{i\in\mathbb{N}_0} \xrightarrow{\cong} \left(\varinjlim_{n\in\mathbb{N}} \operatorname{Ext}^i_R(\mathfrak{a}^n, \cdot)\right)_{i\in\mathbb{N}_0}$$

which extends the identity natural equivalence from $D_{\mathfrak{a}}$ to itself.

Let M be a graded R-module. We define structures as graded R-modules on the $\mathscr{R}^i D_{\mathfrak{a}}(M)$ ($i \in \mathbb{N}$) so that the R-isomorphism $\psi^i_{\mathfrak{a}M}$ is homogeneous for all $i \in \mathbb{N}$. A consequence of this definition is that the connected sequence $(\mathscr{R}^i D_{\mathfrak{a}})_{i\in\mathbb{N}_0}$ from $\mathscr{C}(R)$ to itself has the *restriction property.

Denote by $^*D_{\mathfrak{a}} : {}^*\mathscr{C}(R) \longrightarrow {}^*\mathscr{C}(R)$ the functor induced by $D_{\mathfrak{a}}\lceil$. Show that

$$\left(\mathscr{R}^i(^*D_{\mathfrak{a}})\right)_{i\in\mathbb{N}_0}, \qquad \left((\mathscr{R}^i D_{\mathfrak{a}})\lceil\right)_{i\in\mathbb{N}_0}, \qquad \left(\varinjlim_{n\in\mathbb{N}} \operatorname{Ext}^i_R(\mathfrak{a}^n, \cdot)\lceil\right)_{i\in\mathbb{N}_0}$$

are three isomorphic strongly connected sequences of functors from $^*\mathscr{C}(R)$ to itself.

(iii) Let $i \in \mathbb{N}$. Show that the natural equivalence $\gamma^i : \mathscr{R}^i D_{\mathfrak{a}} \xrightarrow{\cong} H_{\mathfrak{a}}^{i+1}$ of 2.2.4(ii) has the *restriction property, so that, for each graded R-module M, there is a homogeneous R-isomorphism $\mathscr{R}^i D_{\mathfrak{a}}(M) \cong H_{\mathfrak{a}}^{i+1}(M)$ of graded R-modules.

Up to this point, this chapter has been fairly technical. In contrast, we end the chapter with some concrete illustrations of some of the ideas developed so far: the next exercise introduces the important concept of Veronesean subring, and this idea is involved in Example 12.4.7 and Exercise 12.4.8.

12.4.6 ♯Exercise: Veronesean subrings and functors. Assume that $R = \bigoplus_{n\in\mathbb{Z}} R_n$ is graded and that the ideal $\mathfrak{a}$ is graded. Let $r \in \mathbb{N}$ and $s \in \mathbb{Z}$ be fixed. Define $R^{(r)} := \bigoplus_{n\in\mathbb{Z}} R_{rn}$: then $R^{(r)}$ is a subring of R, and is itself a graded (commutative Noetherian) ring with grading given by $(R^{(r)})_n = R_{rn}$ for all $n \in \mathbb{Z}$. We refer to $R^{(r)}$, with this grading, as the *r-th Veronesean subring of* R.

Let $M = \bigoplus_{n\in\mathbb{Z}} M_n$ and $L = \bigoplus_{n\in\mathbb{Z}} L_n$ be arbitrary graded R-modules, and let $f : M \longrightarrow L$ be a homogeneous homomorphism, with n-th component $f_n : M_n \longrightarrow L_n$ for all $n \in \mathbb{Z}$. We define $M^{(r,s)} := \bigoplus_{n\in\mathbb{Z}} M_{rn+s}$, an $R^{(r)}$-submodule of $M\lceil_{R^{(r)}}$; in fact, $M^{(r,s)}$ is a graded $R^{(r)}$-module with grading given by $(M^{(r,s)})_n = M_{rn+s}$ for all $n \in \mathbb{Z}$. Note that $M^{(r,s)} = (M(s))^{(r,0)}$. Also, we denote by $f^{(r,s)} : M^{(r,s)} \longrightarrow L^{(r,s)}$ the homogeneous homomorphism of graded $R^{(r)}$-modules for which $(f^{(r,s)})_n = f_{rn+s} : M_{rn+s} \longrightarrow L_{rn+s}$ for all $n \in \mathbb{Z}$. With these assignments, $(\,\cdot\,)^{(r,s)} : {}^*\mathscr{C}(R) \longrightarrow {}^*\mathscr{C}(R^{(r)})$ becomes an exact additive covariant functor, which we refer to as the *(r, s)-th Veronesean functor*.

Note that, since $\mathfrak{a}$ is graded, $\mathfrak{a}^{(r)} := \mathfrak{a}^{(r,0)}$ is a graded ideal of $R^{(r)}$.

(i) Show that there is an isomorphism of $R^{(r)}$-modules

$$\bigoplus_{i=0}^{r-1} M^{(r,s+i)} \xrightarrow{\cong} M\lceil_{R^{(r)}}.$$

(ii) Show that $\sqrt{\mathfrak{a}^{(r)}R} = \sqrt{\mathfrak{a}}$.

(iii) Show that $\Gamma_{\mathfrak{a}^{(r)}}(M^{(r,s)}) = (\Gamma_{\mathfrak{a}}(M))^{(r,s)}$.

(iv) Let $\mathfrak{b}$ be a graded ideal of $R^{(r)}$, and let I be a *injective graded R-module. Let $j \in \mathbb{N}$. Show that there is an isomorphism of $R^{(r)}$-modules

$$\bigoplus_{i=0}^{r-1} H_{\mathfrak{b}}^j(I^{(r,s+i)}) \xrightarrow{\cong} H_{\mathfrak{b}R}^j(I),$$

and deduce that the $R^{(r)}$-module $I^{(r,s)}$ is $\Gamma_{\mathfrak{b}}$-acyclic.

(v) Show that there is a unique isomorphism

$$\Phi = \left(\phi^i\right)_{i\in\mathbb{N}_0} : \left(H^i_{\mathfrak{a}^{(r)}}((\,\bullet\,)^{(r,s)})\right)_{i\in\mathbb{N}_0} \longrightarrow \left((H^i_{\mathfrak{a}}(\,\bullet\,))^{(r,s)}\right)_{i\in\mathbb{N}_0}$$

of negative strongly connected sequences of covariant functors from $^*\mathscr{C}(R)$ to $^*\mathscr{C}(R^{(r)})$ for which ϕ^0 is the identity natural equivalence.

(vi) Use 2.2.13 to show that there is a natural equivalence of functors

$$(D_{\mathfrak{a}}(\,\bullet\,))^{(r,s)} \xrightarrow{\cong} D_{\mathfrak{a}^{(r)}}((\,\bullet\,)^{(r,s)})$$

from $^*\mathscr{C}(R)$ to $^*\mathscr{C}(R^{(r)})$.

12.4.7 Example. Let K be a field, let $d \in \mathbb{N}$ with $d \geq 3$, and let $A_{(d)}$ be the subring of the ring $K[X,Y]$ of polynomials over K in two indeterminates X and Y given by

$$A_{(d)} := K[X^d, X^{d-1}Y, XY^{d-1}, Y^d].$$

This is a subring of the d-th Veronesean subring $K[X,Y]^{(d)}$ of $K[X,Y]$, described in 12.4.6; in fact, $A_{(d)}$ inherits a grading from $K[X,Y]^{(d)}$.

In this example, it will be convenient, when considering a positively graded commutative Noetherian ring $R' = \bigoplus_{n\in\mathbb{N}_0} R'_n$, to denote the graded ideal $\bigoplus_{n\in\mathbb{N}} R'_n$ by R'_+.

Note that $A_{(d)+}$ is the unique graded maximal ideal of $A_{(d)}$. We shall now illustrate some of the ideas of this chapter by showing that the ideal transform $D_{A_{(d)+}}(A_{(d)})$ can be naturally identified with $K[X,Y]^{(d)}$, and then exploiting this fact to obtain information about $H^1_{A_{(d)+}}(A_{(d)})$.

Let $\phi : A_{(d)} \longrightarrow K[X,Y]^{(d)}$ denote the inclusion homomorphism. If $m := X^iY^j$ with $i,j \in \mathbb{N}_0$, $i+j \equiv 0 \pmod{d}$ and $i+j > 0$, then we can write $m = X^{du}Y^{dv}X^rY^{d-r}$ for some $u,v,r \in \mathbb{N}_0$ with $0 \leq r \leq d$. If $r = 0, 1, d-1$ or d, then $m \in A_{(d)}$. Now suppose that $2 \leq r \leq d-2$. Then

$$\begin{aligned}
Y^{d(r-1)}m &= X^{du}Y^{dv}(XY^{d-1})^r \in A_{(d)},\\
X^{d(d-r-1)}m &= X^{du}Y^{dv}(X^{d-1}Y)^{d-r} \in A_{(d)},\\
(X^{d-1}Y)^r m &= X^{du}Y^{dv}X^{dr}Y^d \in A_{(d)},\\
(XY^{d-1})^{d-r}m &= X^{du}Y^{dv}X^dY^{d(d-r)} \in A_{(d)}.
\end{aligned}$$

Hence $\operatorname{Ker}\phi$ and $\operatorname{Coker}\phi$ are both $A_{(d)+}$-torsion. Note that

$$\begin{aligned}
\sqrt{A_{(d)+}K[X,Y]^{(d)}} &= \sqrt{(X^d, X^{d-1}Y, XY^{d-1}, Y^d)K[X,Y]^{(d)}}\\
&= (K[X,Y]^{(d)})_+ = (K[X,Y]_+)^{(d)}.
\end{aligned}$$

Therefore, by 12.4.6 and the Independence Theorem 4.2.1, we have, for $i \in \mathbb{N}_0$,

$$\begin{aligned} H^i_{A_{(d)+}}(K[X,Y]^{(d)}) &\cong H^i_{A_{(d)+}K[X,Y]^{(d)}}(K[X,Y]^{(d)}) \\ &= H^i_{(K[X,Y]_-)^{(d)}}(K[X,Y]^{(d)}) \\ &\cong (H^i_{(X,Y)}(K[X,Y]))^{(d.0)}, \end{aligned}$$

and this is zero for $i = 0, 1$.

It therefore follows from 2.2.13 that there is a unique $A_{(d)}$-isomorphism $\phi' : K[X,Y]^{(d)} \longrightarrow D_{A_{(d)+}}(A_{(d)})$ such that the diagram

$$\begin{tikzcd} A_{(d)} \arrow[r, "\phi"] \arrow[dr, "\eta_{A_{(d)}}"'] & K[X,Y]^{(d)} \arrow[d, "\phi'", "\cong"'] \\ & D_{A_{(d)-}}(A_{(d)}) \end{tikzcd}$$

commutes, and from 12.4.2(ii) that ϕ' is homogeneous. Hence, by 12.4.2(i), there is a homogeneous $A_{(d)}$-isomorphism $\operatorname{Coker}\phi \cong H^1_{A_{(d)+}}(A_{(d)})$. For each $n \in \mathbb{N}_0$, let A_n (respectively B_n) denote the n-th component of the graded $A_{(d)}$-module $A_{(d)}$ (respectively $K[X,Y]^{(d)}$). We now compare A_n and B_n.

First, when $1 \leq n < d-2$ the monomial $X^{d-2}Y^{nd-d-2}$ cannot be expressed as a product of n factors all taken from $\{X^d, X^{d-1}Y, XY^{d-1}, Y^d\}$, and so $A_n \subset B_n$.

Next, we consider the case where $n \geq d-2$. Of course, $X^{dn} \in A_n$; we therefore consider a monomial of the form $X^{rd+s}Y^{(n-r)d-s}$, where $0 \leq r \leq n-1$ and $0 \leq s \leq d-1$. We claim that either (a) $r+s \leq n$ or (b) $r+s \geq d-1$: if this were not the case, then we should have

$$n \leq r+s-1 \qquad \text{and} \qquad r+s \leq d-2,$$

which would imply that $n \leq d-3$, a contradiction. In case (a), we have

$$X^{rd+s}Y^{(n-r)d-s} = (X^d)^r(XY^{d-1})^s(Y^d)^{n-r-s} \in A_n,$$

while in case (b) we have

$$X^{rd+s}Y^{(n-r)d-s} = (X^d)^{r-s+1-d}(X^{d-1}Y)^{d-s}(Y^d)^{n-r-1} \in A_n.$$

Thus $A_n = B_n$ in this case.

It follows that the n-th component of $H^1_{A_{(d)+}}(A_{(d)})$ is non-zero if and only if $1 \leq n < d-2$.

12.4.8 ♯Exercise. Let K be a field and let $R := K[X_1, \ldots, X_n]$, the ring of polynomials over K in n indeterminates (where $n \in \mathbb{N}$), graded in the usual

way (so that X_i has degree 1, for all $i = 1, \ldots, n$). Let $r \in \mathbb{N}$, and consider the r-th Veronesean subring $R^{(r)}$ of R, as in 12.4.6. Thus $R^{(r)}$ is the K-subspace of R generated by

$$\{X_1^{v_1} \ldots X_n^{v_n} : v_1, \ldots, v_n \in \mathbb{N}_0,\ v_1 + \ldots + v_n \equiv 0 \pmod{r}\}.$$

Let $R_+^{(r)}$ denote the unique graded maximal ideal of $R^{(r)}$. Show that $H^i_{R_+^{(r)}}(R^{(r)}) = 0$ for all $i \in \mathbb{N}_0 \setminus \{n\}$, and deduce from [6, 1.5.8 and 1.5.9] that $R^{(r)}$ is Cohen-Macaulay.

13

Graded versions of basic theorems

We have now laid the foundations of graded local cohomology theory in Chapter 12. Indeed, in the case where R is graded and the ideal $\mathfrak{a}$ is graded, we now know that, for a graded R-module M, there is a natural way in which to define gradings on the local cohomology modules $H^i_{\mathfrak{a}}(M)$ ($i \in \mathbb{N}_0$); furthermore, whenever $f : M \longrightarrow N$ is a morphism in ${}^*\mathscr{C}(R)$, then $H^i_{\mathfrak{a}}(f)$ is a homogeneous homomorphism for all $i \in \mathbb{N}_0$; also, whenever

$$0 \longrightarrow L \longrightarrow M \longrightarrow N \longrightarrow 0$$

is an exact sequence in the 'graded' category ${}^*\mathscr{C}(R)$, then all the homomorphisms, including the connecting homomorphisms, in the induced long exact sequence of local cohomology modules (with respect to $\mathfrak{a}$) are homogeneous.

We shall also need in the following chapters the refinements available in the graded case of such fundamental results as the Independence Theorem 4.2.1 and the Flat Base Change Theorem 4.3.2, and the theory of local duality of Chapter 11. This chapter is concerned with such refinements. In fact, one could take the view that part of this chapter is a rapid retracing of steps through earlier chapters, revisiting many of the highlights in order to 'add graded frills'! Often, but not always, we shall present graded versions by means of exercises.

13.1 Fundamental theorems

13.1.1 Notation and Terminology. We shall employ the notation and terminology concerning graded rings and modules described in 12.1.1. In addition, when R is graded and the ideal $\mathfrak{a}$ is graded, and M is a graded R-module, we use $H^i_{\mathfrak{a}}(M)_n$ to denote the n-th component of the graded R-module $H^i_{\mathfrak{a}}(M)$ (for $i \in \mathbb{N}_0$ and $n \in \mathbb{Z}$).

Suppose that R is graded, and let $M = \bigoplus_{n \in \mathbb{Z}} M_n$ be a graded R-module.

We define the *end of* M by $\operatorname{end}(M) := \sup\{n \in \mathbb{Z} : M_n \neq 0\}$ if this supremum exists, and ∞ otherwise. (We adopt the convention that the supremum of the empty set of integers is to be taken as $-\infty$, and we interpret $-\infty + t$ as $-\infty$ for all $t \in \mathbb{Z}$.) With analogous conventions, we similarly define the *beginning of* M, denoted by $\operatorname{beg}(M)$, to be $\inf\{n \in \mathbb{Z} : M_n \neq 0\}$ if this infimum exists, and $-\infty$ otherwise.

We shall use 'deg' as an abbreviation for degree (of a non-zero homogeneous element of R or of a graded module over R). For a graded prime ideal $\mathfrak{p}$ of R, the notations $R_{(\mathfrak{p})}$ and $M_{(\mathfrak{p})}$ will denote the *homogeneous localizations* of R and M respectively *at* $\mathfrak{p}$. The concept of homogeneous localization is explained in [6, p. 30]; it should not be confused with a different concept for which Hartshorne, in [22, p. 18], uses the notation '$_{(\mathfrak{p})}$'. We shall say that R is **local* precisely when R has exactly one *maximal graded ideal, that is (see [6, 1.5.13]), exactly one maximal member of the set of proper graded ideals. The statement '$(R, \mathfrak{m})$ is *local' is to be interpreted as meaning that $\mathfrak{m}$ is the unique *maximal graded ideal of the graded ring R. For an ideal $\mathfrak{b}$ of R, we shall denote by $\mathfrak{b}^*$ the graded ideal generated by all homogeneous elements of $\mathfrak{b}$.

13.1.2 Definition and Remark. Assume that R is graded, let $R' = \bigoplus_{n\in\mathbb{Z}} R'_n$ be a commutative graded ring, and let $f : R \longrightarrow R'$ be a ring homomorphism.

We say that f is *homogeneous* precisely when $f(R_n) \subseteq R'_n$ for all $n \in \mathbb{Z}$. Assume that this is the case. Let $M' = \bigoplus_{n\in\mathbb{Z}} M'_n$ be a graded R'-module. Then the same direct sum decomposition provides the R-module $M'\lceil_R$ with a structure as graded R-module. Thus, in the terminology of 12.2.1, the functor $\lceil_R : \mathscr{C}(R') \longrightarrow \mathscr{C}(R)$ has the *restriction property.

Whenever we regard, in such circumstances, a graded R'-module M' as a graded R-module, it is to be understood that the same grading is used for the two structures. Thus we can write $(M'\lceil_R)_n = (M'_n)\lceil_{R_0}$ for all $n \in \mathbb{Z}$.

13.1.3 Proposition. *Assume that R is graded and that the ideal $\mathfrak{a}$ is graded, and let $R' = \bigoplus_{n\in\mathbb{Z}} R'_n$ be a second commutative Noetherian graded ring. Let $f : R \longrightarrow R'$ be a ring homomorphism which is homogeneous (see* 13.1.2*).*

The natural equivalence of functors

$$\varepsilon : D_{\mathfrak{a}R'}(\,\cdot\,)\lceil_R \longrightarrow D_{\mathfrak{a}}(\,\cdot\,\lceil_R)$$

of 2.2.21 *(from $\mathscr{C}(R')$ to $\mathscr{C}(R)$) has the *restriction property.*

Proof. Since $\mathfrak{a}R'$ is a graded ideal of R', it follows from 12.2.10 and 13.1.2 that both $D_{\mathfrak{a}R'}(\,\cdot\,)\lceil_R$ and $D_{\mathfrak{a}}(\,\cdot\,\lceil_R)$ have the *restriction property.

Let M' be a graded R'-module. The homomorphism

$$\eta_{\mathfrak{a}R',M'}\lceil_R : M'\lceil_R \longrightarrow D_{\mathfrak{a}R'}(M')\lceil_R$$

is homogeneous by 12.2.10, and has kernel and cokernel which are $\mathfrak{a}$-torsion by 2.2.21. The result therefore follows from 12.4.2(ii). □

13.1.4 ♯Exercise: Graded Mayer-Vietoris Sequence. Assume that R is graded and that the ideal $\mathfrak{a}$ is graded; let $\mathfrak{b}$ be a second graded ideal of R. Show that, for a graded R-module M, all the homomorphisms in the Mayer-Vietoris Sequence (see 3.2.3)

$$\begin{array}{ccccccc}
0 & \longrightarrow & H^0_{\mathfrak{a}+\mathfrak{b}}(M) & \longrightarrow & H^0_{\mathfrak{a}}(M) \oplus H^0_{\mathfrak{b}}(M) & \longrightarrow & H^0_{\mathfrak{a}\cap\mathfrak{b}}(M) \\
 & \longrightarrow & H^1_{\mathfrak{a}+\mathfrak{b}}(M) & \longrightarrow & H^1_{\mathfrak{a}}(M) \oplus H^1_{\mathfrak{b}}(M) & \longrightarrow & H^1_{\mathfrak{a}\cap\mathfrak{b}}(M) \\
 & \longrightarrow & \cdots & & & & \cdots \\
 & \longrightarrow & H^i_{\mathfrak{a}+\mathfrak{b}}(M) & \longrightarrow & H^i_{\mathfrak{a}}(M) \oplus H^i_{\mathfrak{b}}(M) & \longrightarrow & H^i_{\mathfrak{a}\cap\mathfrak{b}}(M) \\
 & \longrightarrow & H^{i+1}_{\mathfrak{a}+\mathfrak{b}}(M) & \longrightarrow & \cdots & &
\end{array}$$

are homogeneous.

13.1.5 ♯Exercise. Assume that R is graded and that the ideal $\mathfrak{a}$ is graded; let $i \in \mathbb{N}_0$.

(i) Let $(\Lambda, \leq)$ be a (non-empty) directed partially ordered set, and let $(W_\alpha)_{\alpha\in\Lambda}$ be a direct system of graded R-modules and homogeneous R-homomorphisms over Λ, with constituent R-homomorphisms $h^\alpha_\beta : W_\beta \to W_\alpha$ (for each $(\alpha, \beta) \in \Lambda \times \Lambda$ with $\alpha \geq \beta$). (See 12.2.8.)

Show that the isomorphism

$$\varinjlim_{\alpha\in\Lambda} H^i_{\mathfrak{a}}(W_\alpha) \xrightarrow{\cong} H^i_{\mathfrak{a}}\left(\varinjlim_{\alpha\in\Lambda} W_\alpha\right)$$

given by Theorem 3.4.10 (see also 3.4.1) is homogeneous.

(ii) Let $(L_\theta)_{\theta\in\Omega}$ be a non-empty family of graded R-modules. Show that the isomorphism

$$H^i_{\mathfrak{a}}\left(\bigoplus_{\theta\in\Omega} L_\theta\right) \xrightarrow{\cong} \bigoplus_{\theta\in\Omega} H^i_{\mathfrak{a}}(L_\theta)$$

given by (Theorem 3.4.10 and) Exercise 3.4.5 is homogeneous.

Next we use Theorem 12.3.1 to establish quickly graded versions of the Independence Theorem 4.2.1 and the Flat Base Change Theorem 4.3.2.

13.1.6 Graded Independence Theorem. *Assume that* $R = \bigoplus_{n\in\mathbb{Z}} R_n$ *is graded and that the ideal* $\mathfrak{a}$ *is graded, and let* $R' = \bigoplus_{n\in\mathbb{Z}} R'_n$ *be a second commutative Noetherian graded ring.*

Let $f : R \longrightarrow R'$ *be a ring homomorphism which is homogeneous (see* 13.1.2*).*

(i) *Both the negative (strongly) connected sequences of covariant functors*

$$(H^i_{\mathfrak{a}R'}(\,\cdot\,)\lceil_R)_{i\in\mathbb{N}_0} \qquad \text{and} \qquad (H^i_{\mathfrak{a}}(\,\cdot\,\lceil_R))_{i\in\mathbb{N}_0}$$

from $\mathscr{C}(R')$ *to* $\mathscr{C}(R)$ *have the *restriction property.*

(ii) *The isomorphism of connected sequences*

$$\Lambda = (\lambda^i)_{i\in\mathbb{N}_0} : (H^i_{\mathfrak{a}R'}(\,\cdot\,)\lceil_R)_{i\in\mathbb{N}_0} \xrightarrow{\cong} (H^i_{\mathfrak{a}}(\,\cdot\,\lceil_R))_{i\in\mathbb{N}_0}$$

of 4.2.1 *has the *restriction property. Consequently, for each* $i \in \mathbb{N}_0$ *and each graded* R'*-module* M'*, there is a* homogeneous R*-isomorphism*

$$\lambda^i_{M'} : H^i_{\mathfrak{a}R'}(M') \xrightarrow{\cong} H^i_{\mathfrak{a}}(M').$$

Proof. (i) Since f is homogeneous, the restriction functor $\lceil_R : \mathscr{C}(R') \to \mathscr{C}(R)$ has the *restriction property of 12.2.1: see 13.1.2. Since, by 12.3.3 and 12.3.4, the connected sequence $(H^i_{\mathfrak{a}})_{i\in\mathbb{N}_0}$ (from $\mathscr{C}(R)$ to $\mathscr{C}(R)$) has the *restriction property, it is immediate that $(H^i_{\mathfrak{a}}(\,\cdot\,\lceil_R))_{i\in\mathbb{N}_0}$ has the *restriction property. Since the extension $\mathfrak{a}R'$ of $\mathfrak{a}$ to R' under f is a graded ideal, it is just as easy to see that $(H^i_{\mathfrak{a}R'}(\,\cdot\,)\lceil_R)_{i\in\mathbb{N}_0}$ has the *restriction property.

(ii) Since λ^0 is the identity natural equivalence from $\Gamma_{\mathfrak{a}R'}(\,\cdot\,)\lceil_R = \Gamma_{\mathfrak{a}}(\,\cdot\,\lceil_R)$ to itself, λ^0 has the *restriction property.

For each $i \in \mathbb{N}_0$ and each graded R'-module M', we can use the grading on $H^i_{\mathfrak{a}}(M'\lceil_R)$ of (i) to define a grading on $H^i_{\mathfrak{a}R'}(M')\lceil_R$ in such a way that the isomorphism

$$\lambda^i_{M'} : H^i_{\mathfrak{a}R'}(M')\lceil_R \xrightarrow{\cong} H^i_{\mathfrak{a}}(M'\lceil_R)$$

is homogeneous: we recover the grading of part (i) on the $\Gamma_{\mathfrak{a}R'}(M')\lceil_R$. With respect to *these* gradings, $(H^i_{\mathfrak{a}R'}(\,\cdot\,)\lceil_R)_{i\in\mathbb{N}_0}$ also has the *restriction property. Since $H^i_{\mathfrak{a}R'}(I')\lceil_R = 0$ for all $i \in \mathbb{N}$ whenever I' is a *injective graded R'-module (by 12.1.3), it follows from 12.3.1 that these gradings coincide with the natural ones used in part (i). All the remaining claims follow from this. □

Below, we shall use a similar argument to establish a graded version of the Flat Base Change Theorem 4.3.2. However, the reader might find the following preparatory remark helpful.

13.1.7 Remark. Assume that R is graded, and let $M = \bigoplus_{n\in\mathbb{Z}} M_n$ be a graded

R-module. Let $R' = \bigoplus_{n\in\mathbb{Z}} R'_n$ be a second commutative Noetherian graded ring, and let $f : R \longrightarrow R'$ be a ring homomorphism which is homogeneous (see 13.1.2). Then $R'\lceil_R$ is a graded R-module (as is explained in 13.1.2), and so $M \otimes_R R'$ has a structure as graded R-module. In fact, the direct decomposition $M \otimes_R R' = \bigoplus_{n\in\mathbb{Z}}(M \otimes_R R')_n$ described in 12.1.1 actually provides $M \otimes_R R'$ with a structure as graded R'-module, and

$$(\,\cdot\,) \otimes_R R' : \mathscr{C}(R) \longrightarrow \mathscr{C}(R')$$

has the *restriction property.

13.1.8 Graded Flat Base Change Theorem. *Assume that R is graded and that the ideal $\mathfrak{a}$ is graded, and let $R' = \bigoplus_{n\in\mathbb{Z}} R'_n$ be a second commutative Noetherian graded ring.*

Let $f : R \longrightarrow R'$ be a ring homomorphism which is homogeneous (see 13.1.2*) and flat.*

(i) *Both the negative (strongly) connected sequences of covariant functors*

$$(H^i_{\mathfrak{a}}(\,\cdot\,) \otimes_R R')_{i\in\mathbb{N}_0} \qquad \textit{and} \qquad (H^i_{\mathfrak{a}R'}((\,\cdot\,) \otimes_R R'))_{i\in\mathbb{N}_0}$$

*from $\mathscr{C}(R)$ to $\mathscr{C}(R')$ have the *restriction property.*

(ii) *The isomorphism of connected sequences*

$$(\rho^i)_{i\in\mathbb{N}_0} : (H^i_{\mathfrak{a}}(\,\cdot\,) \otimes_R R')_{i\in\mathbb{N}_0} \xrightarrow{\cong} (H^i_{\mathfrak{a}R'}((\,\cdot\,) \otimes_R R'))_{i\in\mathbb{N}_0}$$

of 4.3.2 *has the *restriction property. Consequently, for each $i \in \mathbb{N}_0$ and each graded R-module M, there is a* homogeneous *R'-isomorphism*

$$\rho^i_M : H^i_{\mathfrak{a}}(M) \otimes_R R' \xrightarrow{\cong} H^i_{\mathfrak{a}R'}(M \otimes_R R').$$

Proof. (i) Since f is homogeneous, the functor $(\,\cdot\,) \otimes_R R' : \mathscr{C}(R) \longrightarrow \mathscr{C}(R')$ has the *restriction property: see 13.1.7. Since the extension $\mathfrak{a}R'$ of $\mathfrak{a}$ to R' under f is a graded ideal, it follows from 12.3.3 and 12.3.4 that the connected sequence $(H^i_{\mathfrak{a}R'})_{i\in\mathbb{N}_0}$ (from $\mathscr{C}(R')$ to $\mathscr{C}(R')$) has the *restriction property. Hence $(H^i_{\mathfrak{a}R'}((\,\cdot\,) \otimes_R R'))_{i\in\mathbb{N}_0}$ has the *restriction property. It is just as easy to see that $(H^i_{\mathfrak{a}}(\,\cdot\,) \otimes_R R')_{i\in\mathbb{N}_0}$ has the *restriction property.

(ii) Note that, by 4.3.1, the natural equivalence ρ^0 has the *restriction property.

For each $i \in \mathbb{N}_0$ and each graded R-module M, we can use the grading on $H^i_{\mathfrak{a}R'}(M \otimes_R R')$ of (i) to define a grading on $H^i_{\mathfrak{a}}(M) \otimes_R R'$ in such a way that the isomorphism $\rho^i_M : H^i_{\mathfrak{a}}(M) \otimes_R R' \xrightarrow{\cong} H^i_{\mathfrak{a}R'}(M \otimes_R R')$ is homogeneous: we recover the grading of part (i) on the $\Gamma_{\mathfrak{a}}(M) \otimes_R R'$. With respect to *these* gradings, $(H^i_{\mathfrak{a}}(\,\cdot\,) \otimes_R R')_{i\in\mathbb{N}_0}$ also has the *restriction property. Since $H^i_{\mathfrak{a}}(I) \otimes_R R' = 0$ for

all $i \in \mathbb{N}$ whenever I is a *injective graded R-module (by 12.1.3), it follows from 12.3.1 that these gradings coincide with the natural ones used in part (i). All the remaining claims follow from this. □

Next, we explore the behaviour of graded local cohomology with respect to a shift functor.

13.1.9 Remarks. Assume that $R = \bigoplus_{n\in\mathbb{Z}} R_n$ is graded; let $t \in \mathbb{Z}$ and $j \in \mathbb{N}_0$. Let $r_t \in R_t$ be a homogeneous element of degree t. Let G, M be graded R-modules.

(i) The graded R-modules $^*\operatorname{Hom}_R(G, M(t))$ and $(^*\operatorname{Hom}_R(G, M))(t)$ are equal. Since $^*\operatorname{Ext}^j_R(\,\cdot\,, N)$ is the j-th right derived functor of $^*\operatorname{Hom}_R(\,\cdot\,, N)$ in $^*\mathscr{C}(R)$, it follows that the graded modules $^*\operatorname{Ext}^j_R(G, M(t))$ and $(^*\operatorname{Ext}^j_R(G, M))(t)$ are again equal (and not just isomorphic in $^*\mathscr{C}(R)$). Hence the graded R-modules

$$\varinjlim_{n\in\mathbb{N}} \operatorname{Ext}^j_R(R/\mathfrak{a}^n, M(t)) \qquad \text{and} \qquad \left(\varinjlim_{n\in\mathbb{N}} \operatorname{Ext}^j_R(R/\mathfrak{a}^n, M)\right)(t)$$

are equal.

(ii) If we forget the gradings on M and $M(t)$, we obtain the same ungraded R-module M. By 12.3.6(i), the grading on $H^j_{\mathfrak{a}}(M)$ can be defined from the grading of 12.2.9(i) on $\varinjlim_{n\in\mathbb{N}} \operatorname{Ext}^j_R(R/\mathfrak{a}^n, M)$ simply by requiring that the isomorphism $\phi^j_{\mathfrak{a},M}$ be homogeneous. Similarly, we can obtain the grading on $H^j_{\mathfrak{a}}(M(t))$ by using $\phi^j_{\mathfrak{a},M}$ to 'lift across' the grading of 12.2.9(i) on $\varinjlim_{n\in\mathbb{N}} \operatorname{Ext}^j_R(R/\mathfrak{a}^n, M(t))$. It therefore follows from part (i) that the graded modules $H^j_{\mathfrak{a}}(M(t))$ and $(H^j_{\mathfrak{a}}(M))(t)$ are equal.

(iii) The fact that $\mathscr{R}^j D_{\mathfrak{a}}(M(t))$ and $(\mathscr{R}^j D_{\mathfrak{a}}(M))(t)$ are the same graded R-module can be deduced in a similar way from 12.4.5(ii).

13.1.10 Lemma. *Assume that $R = \bigoplus_{n\in\mathbb{N}_0} R_n$ is positively graded and that the ideal $\mathfrak{a}$ is generated by homogeneous elements of degree 0. Let $\mathfrak{a}_0 = \mathfrak{a} \cap R_0$. Let $n \in \mathbb{Z}$. We denote by $(\,\cdot\,)_n : {}^*\mathscr{C}(R) \longrightarrow \mathscr{C}(R_0)$ the functor which assigns, to each graded R-module, and to each homogeneous homomorphism of graded R-modules, the n-th component.*

There is an isomorphism

$$(H^i_{\mathfrak{a}}(\,\cdot\,)_n)_{i\in\mathbb{N}_0} \xrightarrow{\cong} (H^i_{\mathfrak{a}_0}((\,\cdot\,)_n))_{i\in\mathbb{N}_0}$$

of negative strongly connected sequences of functors from $^*\mathscr{C}(R)$ to $\mathscr{C}(R_0)$.

Proof. Observe that $\Gamma_{\mathfrak{a}}(\cdot)_n$ and $\Gamma_{\mathfrak{a}_0}((\cdot)_n)$ are the same functor. Let $I = \bigoplus_{j\in\mathbb{Z}} I_j$ be a *injective graded R-module. Since $\mathfrak{a} = \mathfrak{a}_0 R$, it follows from the Graded Independence Theorem 13.1.6 and Exercise 3.4.5 that, for all $i \in \mathbb{N}$,

$$0 = H^i_{\mathfrak{a}}(I) = H^i_{\mathfrak{a}_0 R}(I) \cong H^i_{\mathfrak{a}_0}(I\lceil_{R_0}) = H^i_{\mathfrak{a}_0}\left(\bigoplus_{j\in\mathbb{Z}} I_j\right) \cong \bigoplus_{j\in\mathbb{Z}} H^i_{\mathfrak{a}_0}(I_j).$$

Hence I_n is $\Gamma_{\mathfrak{a}_0}$-acyclic. Now endow the commutative Noetherian ring R_0 with the trivial grading [6, 1.5.3(b)]; the result is then an easy consequence of 12.1.7. □

13.1.11 Example. Assume that $R = \bigoplus_{n\in\mathbb{N}_0} R_n$ is positively graded. Let $p \in \mathbb{Z}$ and let L be an R_0-module. We denote

$$\ldots \oplus 0 \oplus \ldots \oplus 0 \oplus \underbrace{L}_{p} \oplus 0 \oplus \ldots \oplus 0 \oplus \ldots$$

(in which all the components other than the p-th are 0), with its obvious structure as a graded R-module, by ${}^pL$.

Assume that the ideal $\mathfrak{a}$ is graded, and let $\mathfrak{a}_0 = \mathfrak{a} \cap R_0$. Let $i \in \mathbb{N}_0$. We show how to use Lemma 13.1.10 to calculate $H^i_{\mathfrak{a}}({}^pL)$. Let $R_+ = \bigoplus_{n\in\mathbb{N}} R_n$; observe that R_+ annihilates ${}^pL$ and that $\mathfrak{a} + R_+ = \mathfrak{a}_0 R + R_+$. The argument of Example 4.2.2 can be modified to our 'graded' situation to produce homogeneous R-isomorphisms $H^i_{\mathfrak{a}}({}^pL) \cong H^i_{\mathfrak{a}+R_+}({}^pL) \cong H^i_{\mathfrak{a}_0 R}({}^pL)$. We can now use 13.1.10 to deduce that, for $n \in \mathbb{Z}$,

$$H^i_{\mathfrak{a}}({}^pL)_n \cong H^i_{\mathfrak{a}_0 R}({}^pL)_n \cong H^i_{\mathfrak{a}_0}(({}^pL)_n) = \begin{cases} H^i_{\mathfrak{a}_0}(L) & \text{if} \quad n = p, \\ 0 & \text{if} \quad n \neq p. \end{cases}$$

Hence there is a homogeneous R-isomorphism ${}^pH^i_{\mathfrak{a}_0}(L) \cong H^i_{\mathfrak{a}}({}^pL)$.

13.1.12 ⋆Exercise. Obtain a 'graded' version of Proposition 8.1.2.

In detail, assume that R is graded and that the ideal $\mathfrak{a}$ is graded; let b be a homogeneous element of R. Show that, for each graded R-module M, there is a long exact sequence of graded R-modules and homogeneous R-homomorphisms

$$\begin{array}{ccccccc}
0 & \longrightarrow & H^0_{\mathfrak{a}+Rb}(M) & \longrightarrow & H^0_{\mathfrak{a}}(M) & \longrightarrow & H^0_{\mathfrak{a}}(M_b) \\
 & \longrightarrow & H^1_{\mathfrak{a}+Rb}(M) & \longrightarrow & H^1_{\mathfrak{a}}(M) & \longrightarrow & H^1_{\mathfrak{a}}(M_b) \\
 & \longrightarrow & \cdots & & & & \cdots \\
 & \longrightarrow & H^i_{\mathfrak{a}+Rb}(M) & \longrightarrow & H^i_{\mathfrak{a}}(M) & \longrightarrow & H^i_{\mathfrak{a}}(M_b) \\
 & \longrightarrow & H^{i+1}_{\mathfrak{a}+Rb}(M) & \longrightarrow & \cdots & &
\end{array}$$

such that, whenever $f : M \longrightarrow N$ is a homogeneous homomorphism of R-modules, the diagram

$$\begin{tikzcd}
H^i_{\mathfrak{a}+Rb}(M) \arrow[r] \arrow[d, "H^i_{\mathfrak{a}+Rb}(f)"] & H^i_{\mathfrak{a}}(M) \arrow[r] \arrow[d, "H^i_{\mathfrak{a}}(f)"] & H^i_{\mathfrak{a}}(M_b) \arrow[r] \arrow[d, "H^i_{\mathfrak{a}}(f_b)"'] & H^{i+1}_{\mathfrak{a}+Rb}(M) \arrow[d, "H^{i+1}_{\mathfrak{a}+Rb}(f)"'] \\
H^i_{\mathfrak{a}+Rb}(N) \arrow[r] & H^i_{\mathfrak{a}}(N) \arrow[r] & H^i_{\mathfrak{a}}(N_b) \arrow[r] & H^{i+1}_{\mathfrak{a}+Rb}(N)
\end{tikzcd}$$

commutes for all $i \in \mathbb{N}_0$.

Our next major aim in this chapter is the presentation of a graded analogue of (a special case of) the local Lichtenbaum-Hartshorne Vanishing Theorem 8.2.1. Before we come to that, however, we provide a remark which can be quite useful in graded situations, and also two preparatory exercises.

13.1.13 Remark. Assume that R is graded, and that M is a graded R-module.

(i) Recall from [6, 1.5.6] that if $\mathfrak{p} \in \operatorname{Supp}(M)$, then the graded prime $\mathfrak{p}^*$ also belongs to $\operatorname{Supp}(M)$. Hence if M has no graded prime ideal in its support, then $M = 0$.

(ii) Consequently, if $(R, \mathfrak{m})$ is *local (see 13.1.1) and $M_{\mathfrak{m}} = 0$, then $M = 0$.

13.1.14 ♯Exercise. Assume that $(R, \mathfrak{m})$ is graded and *local and that $\mathfrak{m}$ is actually a maximal ideal of R. Let M be a graded R-module. Use [6, 1.5.6 and 1.5.8] to show that $\dim M = \dim_{R_{\mathfrak{m}}} M_{\mathfrak{m}}$.

13.1.15 ♯Exercise. Assume that $R = \bigoplus_{n \in \mathbb{N}_0} R_n$ is positively graded, and that the subring R_0 is a local ring having maximal ideal $\mathfrak{m}_0$.

(i) Show that R is *local with unique *maximal ideal

$$\mathfrak{m} := \mathfrak{m}_0 \oplus R_1 \oplus R_2 \oplus \ldots \oplus R_n \oplus \ldots .$$

(ii) Show that, for all $n, i \in \mathbb{N}$, the n-th component of $\mathfrak{m}^{n+i}$ is contained in the R_0-module $\mathfrak{m}_0^i R_n$.

(iii) Assume that $R \neq R_0$. By [6, 1.5.4], there exist non-zero homogeneous elements $y_1, \ldots, y_t$ of R of positive degrees such that $R = R_0[y_1, \ldots, y_t]$. Let $d := \max\{\deg y_i : 1 \leq i \leq t\}$. Show that $R_{(i-1)d+j} \subseteq \mathfrak{m}^i$ for all $i, j \in \mathbb{N}$.

(iv) Show that the multiplication in R induces a natural ring structure on the Abelian group $\prod_{n \in \mathbb{N}_0} R_n$. (The following hint can ease the checking of the

ring axioms. For $a := (a_0, a_1, \ldots, a_n, \ldots) \in \prod_{n \in \mathbb{N}_0} R_n$ and $h \in \mathbb{N}_0$, define

$$a_{\leq h} := (a_0, a_1, \ldots, a_h, 0, 0, \ldots);$$

show that $(a_{\leq h} b_{\leq h})_{\leq h} = (ab)_{\leq h}$ for $a, b \in \prod_{n \in \mathbb{N}_0} R_n$.)

(v) Assume in addition that R_0 is complete. Prove that the inclusion map $R \longrightarrow \prod_{n \in \mathbb{N}_0} R_n$ provides the $\mathfrak{m}$-adic completion of R.

13.1.16 A Graded Lichtenbaum-Hartshorne Vanishing Theorem. *Assume that $R = \bigoplus_{n \in \mathbb{N}_0} R_n$ is positively graded and an integral domain, and that the subring R_0 is a complete local ring having maximal ideal $\mathfrak{m}_0$.*

Assume that the ideal $\mathfrak{a}$ is graded and proper, and that $\dim R/\mathfrak{a} > 0$. Set $d := \dim R$. Then $H^d_{\mathfrak{a}}(R) = 0$.

Proof. Let $\mathfrak{m} := \mathfrak{m}_0 \oplus R_1 \oplus R_2 \oplus \ldots \oplus R_n \oplus \ldots$. By 13.1.15, our graded ring R is *local with unique *maximal ideal $\mathfrak{m}$. Let $\widehat{R_{\mathfrak{m}}}$ denote the completion of the local ring $R_{\mathfrak{m}}$. In view of the natural ring isomorphisms

$$R/\mathfrak{m}^n \xrightarrow{\cong} R_{\mathfrak{m}}/(\mathfrak{m}R_{\mathfrak{m}})^n \qquad \text{for } n \in \mathbb{N},$$

$\widehat{R_{\mathfrak{m}}}$ is isomorphic to the $\mathfrak{m}$-adic completion of R, which is an integral domain by 13.1.15.

Note that $\dim R_{\mathfrak{m}} = d$, by 13.1.14, since $\mathfrak{m}$ is actually a maximal ideal of R. Since $\mathfrak{a}$ is graded, all its minimal primes are graded, and so are contained in $\mathfrak{m}$. Since $\dim R/\mathfrak{a} > 0$, it therefore follows that $\mathfrak{m}$ is not a minimal prime of $\mathfrak{a}$. Hence

$$\dim \left(\widehat{R_{\mathfrak{m}}}/\mathfrak{a}\widehat{R_{\mathfrak{m}}} \right) = \dim \left(R_{\mathfrak{m}}/\mathfrak{a}R_{\mathfrak{m}} \right) > 0.$$

We can therefore use the local Lichtenbaum-Hartshorne Vanishing Theorem 8.2.1 to deduce that $H^d_{\mathfrak{a}R_{\mathfrak{m}}}(R_{\mathfrak{m}}) = 0$. Thus $(H^d_{\mathfrak{a}}(R))_{\mathfrak{m}} = 0$, by 4.3.3. Therefore $H^d_{\mathfrak{a}}(R) = 0$, by 13.1.13(ii). □

Next, we come to graded versions of Faltings' Annihilator Theorem 9.5.1 and Grothendieck's Finiteness Theorem 9.5.2. Loosely, these graded versions say that, in the graded case, both theorems can be reformulated so that only graded prime ideals need be considered. As the Graded Finiteness Theorem has important geometric significance in connection with the cohomology of projective schemes, we provide a proof.

13.1.17 Graded Annihilator and Finiteness Theorems. *Assume that R is graded and is a homomorphic image of a regular (commutative Noetherian) ring. Assume*

that the ideal $\mathfrak{a}$ *is graded; let* $\mathfrak{b}$ *be a second graded ideal of* R *such that* $\mathfrak{b} \subseteq \mathfrak{a}$. *Let* M *be a finitely generated graded* R*-module. Then*

$$\begin{aligned} f_{\mathfrak{a}}^{\mathfrak{b}}(M) &= \inf\{\operatorname{adj}_{\mathfrak{a}} \operatorname{depth} M_{\mathfrak{p}} : \mathfrak{p} \in {}^*\operatorname{Spec}(R) \setminus \operatorname{Var}(\mathfrak{b})\} \\ &= \inf\{\operatorname{depth} M_{\mathfrak{p}} + \operatorname{ht}(\mathfrak{a}+\mathfrak{p})/\mathfrak{p} : \mathfrak{p} \in {}^*\operatorname{Spec}(R) \setminus \operatorname{Var}(\mathfrak{b})\}. \end{aligned}$$

In particular,

$$f_{\mathfrak{a}}(M) = \inf\{\operatorname{depth} M_{\mathfrak{p}} + \operatorname{ht}(\mathfrak{a}+\mathfrak{p})/\mathfrak{p} : \mathfrak{p} \in {}^*\operatorname{Spec}(R) \setminus \operatorname{Var}(\mathfrak{a})\}.$$

Proof. By Faltings' Annihilator Theorem 9.5.1,

$$f_{\mathfrak{a}}^{\mathfrak{b}}(M) = \inf\{\operatorname{depth} M_{\mathfrak{p}} + \operatorname{ht}(\mathfrak{a}+\mathfrak{p})/\mathfrak{p} : \mathfrak{p} \in \operatorname{Spec}(R) \setminus \operatorname{Var}(\mathfrak{b})\}.$$

It is therefore sufficient for us to show that, for each non-graded prime ideal $\mathfrak{p} \in \operatorname{Spec}(R) \setminus \operatorname{Var}(\mathfrak{b})$ for which $\operatorname{depth} M_{\mathfrak{p}}$ is finite, the graded ideal $\mathfrak{p}^*$ (see 13.1.1) is such that $\mathfrak{p}^* \in {}^*\operatorname{Spec}(R) \setminus \operatorname{Var}(\mathfrak{b})$ and

$$\operatorname{depth} M_{\mathfrak{p}^*} + \operatorname{ht}(\mathfrak{a}+\mathfrak{p}^*)/\mathfrak{p}^* \leq \operatorname{depth} M_{\mathfrak{p}} + \operatorname{ht}(\mathfrak{a}+\mathfrak{p})/\mathfrak{p}.$$

This we do.

It is well known (see [6, 1.5.6(a)]) that $\mathfrak{p}^*$ is a graded prime ideal of R, and it is clear that $\mathfrak{p}^* \not\supseteq \mathfrak{b}$. Also, $\operatorname{depth} M_{\mathfrak{p}} = \operatorname{depth} M_{\mathfrak{p}^*} + 1$, by [6, 1.5.9].

Let $t := \operatorname{ht}(\mathfrak{a}+\mathfrak{p})/\mathfrak{p}$ and let $\mathfrak{q}$ be a minimal prime of $\mathfrak{a}+\mathfrak{p}$ such that $\operatorname{ht}\mathfrak{q}/\mathfrak{p} = \operatorname{ht}(\mathfrak{a}+\mathfrak{p})/\mathfrak{p}$. Now, by [6, 1.5.8(b)], we have $\operatorname{ht}\mathfrak{p}/\mathfrak{p}^* = 1$. Since R is a homomorphic image of a regular ring, it is catenary, and therefore

$$\operatorname{ht}\mathfrak{q}/\mathfrak{p}^* = \operatorname{ht}\mathfrak{q}/\mathfrak{p} + \operatorname{ht}\mathfrak{p}/\mathfrak{p}^* = t+1.$$

Since $\mathfrak{a}+\mathfrak{p}^* \subseteq \mathfrak{a}+\mathfrak{p} \subseteq \mathfrak{q}$, it follows that $\operatorname{ht}(\mathfrak{a}+\mathfrak{p}^*)/\mathfrak{p}^* \leq \operatorname{ht}\mathfrak{q}/\mathfrak{p}^* = t+1$. Therefore

$$\begin{aligned} \operatorname{depth} M_{\mathfrak{p}^*} + \operatorname{ht}(\mathfrak{a}+\mathfrak{p}^*)/\mathfrak{p}^* &\leq \operatorname{depth} M_{\mathfrak{p}} - 1 + t + 1 \\ &= \operatorname{depth} M_{\mathfrak{p}} + \operatorname{ht}(\mathfrak{a}+\mathfrak{p})/\mathfrak{p}, \end{aligned}$$

and this completes the proof. □

13.2 *Indecomposable *injective modules

One of our major aims in this chapter is to provide versions of local duality which apply in 'graded' situations, including versions which involve 'graded canonical modules'. To prepare for this programme, we recall the 'graded' analogue of the decomposition theory for injective modules over a commutative Noetherian ring.

13.2.1 Reminders and Notation. Assume that R is graded. Let M be a graded submodule of the graded R-module L.

(i) We say that L is a **essential extension* of M precisely when $B \cap M \neq 0$ for every non-zero graded submodule B of L.

(ii) We say that L is a **injective envelope* (or **injective hull*) of M precisely when L is a *injective R-module which is also a *essential extension of M.

(iii) (See [6, Theorem 3.6.2].) Each graded R-module N has a *injective envelope, and between any two *injective envelopes of N there is a homogeneous isomorphism which restricts to the identity map of N. We denote by $^*E(M)$ or $^*E_R(M)$ one choice of *injective envelope of M .

Some of the results of the next exercise are stated without proof in [6, §3.6].

13.2.2 ♯Exercise. Assume that R is graded.

(i) Let $(M_\lambda)_{\lambda\in\Lambda}$ be a non-empty family of graded R-modules. Show that $\bigoplus_{\lambda\in\Lambda} M_\lambda$ is *injective if and only if M_λ is *injective for all $\lambda \in \Lambda$.

(ii) A graded R-module is said to be **indecomposable* precisely when it is non-zero and cannot be written as the direct sum of two proper graded submodules. Show that, for each $\mathfrak{p} \in {}^*\operatorname{Spec}(R)$, the *injective graded R-module $^*E(R/\mathfrak{p})$ is *indecomposable.

(iii) Show also that each *indecomposable *injective graded R-module is isomorphic (in the category $^*\mathscr{C}(R)$) to $^*E(R/\mathfrak{q})(n)$ for some $\mathfrak{q} \in {}^*\operatorname{Spec}(R)$ and $n \in \mathbb{Z}$.

(iv) Let $\mathfrak{p} \in {}^*\operatorname{Spec}(R)$ and let r be a homogeneous element of degree i in $R \setminus \mathfrak{p}$. Show that multiplication by r provides a homogeneous automorphism of degree i of $^*E(R/\mathfrak{p})$. Show also that each element of $^*E(R/\mathfrak{p})$ is annihilated by some power of $\mathfrak{p}$.

(v) Let $\mathfrak{p}, \mathfrak{q} \in {}^*\operatorname{Spec}(R)$. Prove that, if $^*E(R/\mathfrak{p}) \cong {}^*E(R/\mathfrak{q})(n)$ for some $n \in \mathbb{Z}$ (in $^*\mathscr{C}(R)$), then $\mathfrak{p} = \mathfrak{q}$.

(vi) Show that each non-zero *injective graded R-module has a *indecomposable *injective graded submodule which is a direct summand.

13.2.3 ♯Exercise. Assume that $(R, \mathfrak{m})$ is a *local graded ring. Show that

(i) there is a homogeneous isomorphism $^*\operatorname{Hom}_R(R/\mathfrak{m}, {}^*E(R/\mathfrak{m})) \cong (0 :_{^*E(R/\mathfrak{m})} \mathfrak{m})$, and

(ii) the graded R-module $(0 :_{^*E(R/\mathfrak{m})} \mathfrak{m})$ is just $R/\mathfrak{m}$.

13.2.4 ♯Exercise. (See [6, 3.6.3 and 3.6.4].) Assume that R is graded, and let M be a graded R-module.

(i) Show that each *injective graded R-module I is a direct sum of *indecomposable *injective graded submodules. (Here is a hint: when $I \neq 0$, apply Zorn's Lemma to the set of all sets of *indecomposable *injective graded submodules of I whose sum is direct.)

(ii) A *minimal *injective resolution of* M is a *injective resolution

$$I^\bullet : 0 \longrightarrow I^0 \xrightarrow{d^0} I^1 \longrightarrow \cdots \longrightarrow I^i \xrightarrow{d^i} I^{i+1} \longrightarrow \cdots$$

of M (in the category $^*\mathscr{C}(R)$) such that I^n is a *essential extension of $\operatorname{Ker} d^n$ for every $n \in \mathbb{N}_0$.

Show that M has a minimal *injective resolution, and that the i-th term in such a resolution is uniquely determined, up to isomorphism in $^*\mathscr{C}(R)$, by M. We denote this i-th term by $^*E^i(M)$, or by $^*E^i_R(M)$.

With the notation of 13.2.4, and for an $i \in \mathbb{N}_0$, it follows from 13.2.2(iii) that there is a family $(\mathfrak{p}_\alpha)_{\alpha\in\Lambda}$ of graded prime ideals of R and a family $(n_\alpha)_{\alpha\in\Lambda}$ of integers for which there is a homogeneous isomorphism

$$^*E^i(M) \xrightarrow{\cong} \bigoplus_{\alpha\in\Lambda} {}^*E(R/\mathfrak{p}_\alpha)(n_\alpha).$$

Of course, we would like, as in the analogous ungraded situation (see 11.1.4) to be able to show that, for $\mathfrak{p} \in {}^*\operatorname{Spec}(R)$, the cardinality of the set $\{\alpha \in \Lambda : \mathfrak{p}_\alpha = \mathfrak{p}\}$ depends only on $^*E^i(M)$ and $\mathfrak{p}$ (and therefore only on M and $\mathfrak{p}$) and not on the particular decomposition of $^*E^i(M)$ (as a direct sum of *indecomposable *injective submodules) chosen. This is indeed the case, and, interestingly, the cardinality in question turns out to be equal to the ordinary Bass number $\mu^i(\mathfrak{p}, M)$ of 11.1.4. We are, in the spirit of this book, going to establish this; however, instead of trying to imitate the standard 'ungraded' argument, we shall employ the following lemma, which is of interest in its own right.

13.2.5 Lemma. *Assume that $R = \bigoplus_{n\in\mathbb{Z}} R_n$ is graded. Let M be a graded submodule of the graded R-module $E = \bigoplus_{n\in\mathbb{Z}} E_n$ such that E is a *essential extension of M. Then E is an essential extension of M.*

Proof. For each element x of a graded R-module N, we let $w(x)$ denote the number of non-zero homogeneous components of x; we refer to $w(x)$ as the *width* of x.

Let $0 \neq x \in E$. We show by induction on $w(x)$ (which is necessarily positive) that $Rx \cap M \neq 0$. When $w(x) = 1$, this claim is clear, since then x is homogeneous and we know that E is a *essential extension of M.

We thus assume, inductively, that $w := w(x) > 1$, and that the claim has been proved for non-zero elements of E of width smaller than w. We can write

$x = x_1 + \ldots + x_w$ where $x_i \in E_{d_i}$ for $i = 1, \ldots, w$ and $d_1 < \ldots < d_w$. If there exist $i, j \in \{1, \ldots, w\}$ such that $(0 : x_i) \nsubseteq (0 : x_j)$, then there exists a homogeneous element $t \in (0 : x_i) \setminus (0 : x_j)$, and $0 \neq tx \in E$ with $w(tx) < w(x)$. It therefore follows from the inductive hypothesis that $Rtx \cap M \neq 0$, so that $Rx \cap M \neq 0$.

Therefore, we can, and do, assume that

$$(0 : x_1) = \ldots = (0 : x_w) = \mathfrak{a}.$$

Note that $\mathfrak{a}$ is a graded proper ideal: let $\mathfrak{p} \in \operatorname{ass} \mathfrak{a}$, so that $\mathfrak{p}$ is graded and (by [6, 1.5.6(b)(ii)]) there exists a homogeneous element $s \in R$ such that $\mathfrak{p} = (0 : sx_1)$. Therefore

$$(0 : sx_i) = ((0 : x_i) : s) = ((0 : x_1) : s) = (0 : sx_1) = \mathfrak{p} \qquad \text{for all } i = 1, \ldots, w.$$

It is clear that $\mathfrak{p} \subseteq (0 : sx)$; our next aim is to show that $\mathfrak{p} = (0 : sx)$, and we shall show, by induction on $w(r)$, that, if $r \in (0 : sx)$, then $r \in \mathfrak{p}$. This is easy when $w(r) \leq 1$, since then r is homogeneous and, as $sx = \sum_{i=1}^{w} sx_i$, where the sx_i $(i = 1, \ldots, w)$ have different degrees, and $rsx = 0$, we must therefore have $rsx_i = 0$ for all $i = 1, \ldots, w$.

We thus assume, inductively, that $v := w(r) > 1$, and that the claim has been proved for non-zero elements of $(0 : sx)$ of width smaller than v. We can write $r = r_1 + \ldots + r_v$ where $r_i \in R_{h_i}$ for $i = 1, \ldots, v$ and $h_1 < \ldots < h_v$. Now $0 = rsx = r_1 sx_1 + y$, where all the non-zero homogeneous components of y have degrees greater than $h_1 + \deg s + d_1$. Hence $r_1 sx_1 = 0$. Therefore $r_1 \in (0 : sx_1) = \mathfrak{p} \subseteq (0 : sx)$, and so $r_2 + \ldots + r_v = r - r_1 \in (0 : sx)$. Since $w(r - r_1) = v - 1$, it therefore follows from the inductive hypothesis that $r - r_1 \in \mathfrak{p}$; hence $r \in \mathfrak{p}$ and the inductive step is complete.

We have therefore proved that $\mathfrak{p} = (0 : sx)$. Note that $s(x_1 + \ldots + x_{w-1})$ is a non-zero element of E of width $w - 1$, and so it follows from the inductive hypothesis that $Rs(x_1 + \ldots + x_{w-1}) \cap M \neq 0$. Therefore, there exists $r' \in R$ such that $0 \neq r's(x_1 + \ldots + x_{w-1}) \in M$. Since $\mathfrak{p} = (0 : sx_i)$ for all $i = 1, \ldots, w$, it follows that $r' \notin \mathfrak{p}$.

Since E is a *essential extension of M, there exists $r'' \in R$ such that $0 \neq r''sx_w \in M$; note that $r'' \notin \mathfrak{p}$. Since $\mathfrak{p}$ is prime, $r'r'' \notin \mathfrak{p} = (0 : sx)$, and so $r'r''sx \neq 0$. But

$$r'r''sx = r''(r's(x_1 + \ldots + x_{w-1})) + r'(r''sx_w) \in M.$$

This completes the proof. □

13.2.6 Proposition. *Assume that R is graded and let M be a graded R-module. By* 13.2.4(i) *and* 13.2.2(iii), *there is a family $(\mathfrak{p}_\alpha)_{\alpha \in \Lambda}$ of graded prime ideals of R*

and a family $(n_\alpha)_{\alpha\in\Lambda}$ *of integers for which there is a homogeneous isomorphism* $^*E(M) \xrightarrow{\cong} \bigoplus_{\alpha\in\Lambda} {}^*E(R/\mathfrak{p}_\alpha)(n_\alpha)$.

Let $\mathfrak{p} \in {}^*\mathrm{Spec}(R)$. *Then the cardinality of the set* $\{\alpha \in \Lambda : \mathfrak{p}_\alpha = \mathfrak{p}\}$ *is equal to the ordinary Bass number* $\mu^0(\mathfrak{p}, M)$ *(see* 11.1.4*), and so depends only on* M *and* $\mathfrak{p}$ *and not on the particular decomposition of* $^*E(M)$ *(as a direct sum of* **indecomposable* **injective submodules) chosen.*

Proof. If $(N_\alpha)_{\alpha\in\Lambda}$ is a family of R-modules, then it is easy to see that the obvious monomorphism $\bigoplus_{\alpha\in\Lambda} N_\alpha \longrightarrow \bigoplus_{\alpha\in\Lambda} E(N_\alpha)$ provides the injective envelope of $\bigoplus_{\alpha\in\Lambda} N_\alpha$: the fact that $\bigoplus_{\alpha\in\Lambda} E(N_\alpha)$ is injective follows from 10.1.3(i), and it is an elementary exercise to show that the extension is essential.

For a graded prime ideal $\mathfrak{q}$ of R and $n \in \mathbb{Z}$, it follows from 13.2.5 that $E(^*E(R/\mathfrak{q})(n)) \cong E(R/\mathfrak{q})$. Hence, on use of this, the preceding paragraph and 13.2.5 again,

$$\begin{aligned} E(M) &\cong E(^*E(M)) \cong E\big(\textstyle\bigoplus_{\alpha\in\Lambda} {}^*E(R/\mathfrak{p}_\alpha)(n_\alpha)\big) \\ &\cong \textstyle\bigoplus_{\alpha\in\Lambda} E(^*E(R/\mathfrak{p}_\alpha)(n_\alpha)) \cong \bigoplus_{\alpha\in\Lambda} E(R/\mathfrak{p}_\alpha), \end{aligned}$$

from which the claim is clear. □

We want to extend the result of 13.2.6 to the 'higher' terms in minimal *injective resolutions. The following exercise concerns a key point in the theory of Bass numbers for ungraded situations.

13.2.7 ♯Exercise. Let M be an R-module, and let

$$0 \longrightarrow E^0(M) \xrightarrow{d^0} E^1(M) \longrightarrow \cdots \longrightarrow E^i(M) \xrightarrow{d^i} E^{i+1}(M) \longrightarrow \cdots$$

be the minimal injective resolution of M, so that there is an augmentation R-homomorphism $\alpha : M \to E^0(M)$ such that the sequence

$$0 \longrightarrow M \xrightarrow{\alpha} E^0(M) \xrightarrow{d^0} E^1(M) \longrightarrow \cdots \longrightarrow E^i(M) \xrightarrow{d^i} E^{i+1}(M) \longrightarrow \cdots$$

is exact.

(i) Show that, for all $\mathfrak{p} \in \mathrm{Spec}(R)$ and all $i \in \mathbb{N}_0$, the induced homomorphism $\mathrm{Hom}_{R_\mathfrak{p}}(R_\mathfrak{p}/\mathfrak{p}R_\mathfrak{p}, d^i_\mathfrak{p})$ is zero. (Use 11.1.6.)

(ii) Deduce that the induced homomorphism $\mathrm{Hom}_{R_\mathfrak{p}}(R_\mathfrak{p}/\mathfrak{p}R_\mathfrak{p}, \alpha_\mathfrak{p})$ is an isomorphism.

It will also be convenient if we record now some further consequences of Lemma 13.2.5.

13.2.8 Remarks. Assume that R is graded and let M be a graded R-module. Let

$$0 \longrightarrow {}^*E^0(M) \xrightarrow{e^0} {}^*E^1(M) \longrightarrow \cdots \longrightarrow {}^*E^i(M) \xrightarrow{e^i} {}^*E^{i-1}(M) \longrightarrow \cdots$$

be the minimal *injective resolution of M, with associated (necessarily homogeneous) augmentation homomorphism $\beta : M \longrightarrow {}^*E^0(M)$. Also, let $\alpha : M \longrightarrow E^0(M)$ provide the injective envelope of M.

(i) Since $E^0(M)$ is injective, there is a commutative diagram

$$\begin{tikzcd} M \arrow[r, "\beta"] \arrow[d, equal] & {}^*E^0(M) \arrow[d, "\phi^0"] \\ M \arrow[r, "\alpha"] & E^0(M) \end{tikzcd}$$

of R-modules and R-homomorphisms. Also, 13.2.5 shows that ${}^*E^0(M)$ is an essential extension of $\operatorname{Im}\beta$, and so, since $\operatorname{Ker}\phi^0 \cap \operatorname{Im}\beta = 0$, it follows that ϕ^0 is actually a monomorphism.

(ii) Let $\mathfrak{p} \in \operatorname{Spec}(R)$ and set $k(\mathfrak{p}) := R_\mathfrak{p}/\mathfrak{p}R_\mathfrak{p}$. Now

$$\operatorname{Hom}_{R_\mathfrak{p}}(k(\mathfrak{p}), \phi^0_\mathfrak{p}) \circ \operatorname{Hom}_{R_\mathfrak{p}}(k(\mathfrak{p}), \beta_\mathfrak{p}) = \operatorname{Hom}_{R_\mathfrak{p}}(k(\mathfrak{p}), \alpha_\mathfrak{p}),$$

which is an isomorphism by 13.2.7; on the other hand, the left-exactness of the 'Hom' functor ensures that both $\operatorname{Hom}_{R_\mathfrak{p}}(k(\mathfrak{p}), \phi^0_\mathfrak{p})$ and $\operatorname{Hom}_{R_\mathfrak{p}}(k(\mathfrak{p}), \beta_\mathfrak{p})$ are monomorphisms, and so it follows that they are both isomorphisms.

Our need for a proof of the following lemma is explained by our 'first variable only' approach to the functors $*\operatorname{Ext}^i_R(\,\cdot\,, N)$ ($i \in \mathbb{N}_0$): see 12.1.1.

13.2.9 Lemma. *Assume that R is graded, and let L, M be graded R-modules with M finitely generated. Let*

$$I^\bullet : 0 \longrightarrow I^0 \xrightarrow{f^0} I^1 \longrightarrow \cdots \longrightarrow I^i \xrightarrow{f^i} I^{i+1} \longrightarrow \cdots$$

*be a *injective resolution of L (in the category ${}^*\mathscr{C}(R)$). Then, for each $n \in \mathbb{N}_0$, there is a homogeneous isomorphism*

$$*\operatorname{Ext}^n_R(M, L) \cong H^n(*\operatorname{Hom}_R(M, I^\bullet)).$$

Proof. For each $i \in \mathbb{N}_0$, set $K^i := \operatorname{Ker} f^i$. Note that there is a homogeneous isomorphism $K^0 \cong L$. Suppose that $j \in \mathbb{N}$ with $j > 1$. For each $i = 1, \ldots, j-1$, there is an exact sequence

$$0 \longrightarrow K^{i-1} \longrightarrow I^{i-1} \longrightarrow K^i \longrightarrow 0$$

of graded R-modules and homogeneous homomorphisms. Since M is a finitely generated graded R-module, it follows from (12.1.2 and) 12.2.7 that there are homogeneous isomorphisms

$$\begin{aligned} {}^*\operatorname{Ext}_R^j(M,L) &\cong {}^*\operatorname{Ext}_R^j(M,K^0) \cong {}^*\operatorname{Ext}_R^{j-1}(M,K^1) \cong \dots \\ &\cong {}^*\operatorname{Ext}_R^2(M,K^{j-2}) \cong {}^*\operatorname{Ext}_R^1(M,K^{j-1}). \end{aligned}$$

This means that it is now enough for us to prove the claim in the statement of the lemma in the special cases in which $n = 0$ and $n = 1$. However, the claims in these two cases follow easily from the exact sequences

$$\begin{aligned} 0 &\longrightarrow {}^*\operatorname{Hom}_R(M,L) \longrightarrow {}^*\operatorname{Hom}_R(M,I^0) \longrightarrow {}^*\operatorname{Hom}_R(M,K^1) \\ &\longrightarrow {}^*\operatorname{Ext}_R^1(M,L) \longrightarrow 0 \end{aligned}$$

and $0 \longrightarrow {}^*\operatorname{Hom}_R(M,K^1) \longrightarrow {}^*\operatorname{Hom}_R(M,I^1) \longrightarrow {}^*\operatorname{Hom}_R(M,K^2)$ of graded R-modules and homogeneous homomorphisms which can also be obtained from 12.1.2 and 12.2.7. □

13.2.10 Theorem. *Assume that R is graded and let M be a graded R-module. Let $j \in \mathbb{N}_0$, and denote the j-th term in the minimal *injective resolution of M by ${}^*E^j(M)$, as in* 13.2.4. *By* 13.2.4(i) *and* 13.2.2(iii), *there is a family $(\mathfrak{p}_\alpha)_{\alpha\in\Lambda}$ of graded prime ideals of R and a family $(n_\alpha)_{\alpha\in\Lambda}$ of integers for which there is a homogeneous isomorphism*

$${}^*E^j(M) \xrightarrow{\cong} \bigoplus_{\alpha\in\Lambda} {}^*E(R/\mathfrak{p}_\alpha)(n_\alpha).$$

Let $\mathfrak{p} \in {}^*\operatorname{Spec}(R)$. Then the cardinality of the set $\{\alpha \in \Lambda : \mathfrak{p}_\alpha = \mathfrak{p}\}$ is equal to the ordinary Bass number $\mu^j(\mathfrak{p}, M)$.

Proof. The claim was proved in 13.2.6 in the special case in which $j = 0$. We consider next the case in which $j = 1$.

Use the notation introduced in 13.2.8, and set $K^i = \operatorname{Ker} e^i$ for each $i \in \mathbb{N}_0$. Also, let

$$0 \longrightarrow E^0(M) \xrightarrow{d^0} E^1(M) \longrightarrow \cdots \longrightarrow E^i(M) \xrightarrow{d^i} E^{i+1}(M) \longrightarrow \cdots$$

be the (ordinary, ungraded) minimal injective resolution of M (with associated augmentation homomorphism $\alpha : M \longrightarrow E^0(M)$). For each $i \in \mathbb{N}_0$, set $C^i :=$

$\operatorname{Ker} d^i$. Consider the commutative diagram

$$\begin{tikzcd}
0 \arrow[r] & M \arrow[r] \arrow[d, equal] & {}^*E^0(M) \arrow[r] \arrow[d, "\phi^0"] & K^1 \arrow[r] \arrow[d, "\overline{\phi^0}"] & 0 \\
0 \arrow[r] & M \arrow[r] & E^0(M) \arrow[r] & C^1 \arrow[r] & 0
\end{tikzcd}$$

with exact rows, in which $\overline{\phi^0}$ is the homomorphism induced by ϕ^0. Localize this diagram at $\mathfrak{p}$, and then apply the functor $\operatorname{Hom}_{R_\mathfrak{p}}(k(\mathfrak{p}), \bullet)$, noting that $\operatorname{Ext}^1_R(R/\mathfrak{p}, {}^*E^0(M)) = 0$ by 12.1.2, and that $\operatorname{Hom}_{R_\mathfrak{p}}(k(\mathfrak{p}), \phi^0_\mathfrak{p})$ is an isomorphism by 13.2.8(i). The Five Lemma shows that

$$\operatorname{Hom}_{R_\mathfrak{p}}(k(\mathfrak{p}), \overline{\phi^0}_\mathfrak{p}) : \operatorname{Hom}_{R_\mathfrak{p}}(k(\mathfrak{p}), (K^1)_\mathfrak{p}) \xrightarrow{\cong} \operatorname{Hom}_{R_\mathfrak{p}}(k(\mathfrak{p}), (C^1)_\mathfrak{p})$$

is an isomorphism. Now ${}^*E^1(M) = {}^*E(K^1)$, and so, by 13.2.6, the cardinality of the set $\{\alpha \in \Lambda : \mathfrak{p}_\alpha = \mathfrak{p}\}$ is equal to $\mu^0(\mathfrak{p}, K^1)$; we have just shown that this is $\mu^0(\mathfrak{p}, C^1)$, which is equal to $\mu^1(\mathfrak{p}, M)$ by the theory of Bass numbers in the ungraded case.

Now suppose that $j > 1$. By 13.2.9, there is a homogeneous isomorphism ${}^*\operatorname{Ext}^1_R(R/\mathfrak{p}, K^{j-1}) \cong {}^*\operatorname{Ext}^j_R(R/\mathfrak{p}, M)$, so that $\mu^1(\mathfrak{p}, K^{j-1}) = \mu^j(\mathfrak{p}, M)$. However,

$$0 \longrightarrow K^{j-1} \xrightarrow{\subseteq} {}^*E^{j-1}(M) \xrightarrow{d^{j-1}} {}^*E^j(M)$$

is the start of the minimal *injective resolution of K^{j-1}, and so it follows from what we have already proved in the case in which $j = 1$ that the cardinality of the set $\{\alpha \in \Lambda : \mathfrak{p}_\alpha = \mathfrak{p}\}$ is equal to $\mu^1(\mathfrak{p}, K^{j-1})$, which we now know to be equal to $\mu^j(\mathfrak{p}, M)$. □

13.3 *Canonical modules

Recall from 11.2.7 that, if $(R, \mathfrak{m})$ is a Cohen-Macaulay local ring of dimension n, and C is a finitely generated R-module, then C is a canonical module for R if and only if

$$\mu^i(\mathfrak{m}, C) = \begin{cases} 0 & \text{if} \quad i \neq n, \\ 1 & \text{if} \quad i = n. \end{cases}$$

Thus C is a canonical module for R if and only if

$$\operatorname{Ext}^i_R(R/\mathfrak{m}, C) \cong \begin{cases} 0 & \text{for} \quad i \neq n, \\ R/\mathfrak{m} & \text{for} \quad i = n. \end{cases}$$

We use this as motivation for the definition of *canonical module over a Cohen-Macaulay *local graded ring. Recall from [6, p. 35] that, when $(R, \mathfrak{m})$ is *local, the height of $\mathfrak{m}$ is the *dimension of R.

13.3.1 Definition. Assume that $(R, \mathfrak{m})$ is a Cohen-Macaulay *local graded ring; let $n := \operatorname{ht} \mathfrak{m}$. Let C be a finitely generated graded R-module. We say that C is a **canonical module* for R precisely when there are homogeneous isomorphisms

$$^*\operatorname{Ext}^i_R(R/\mathfrak{m}, C) \cong \begin{cases} 0 & \text{for} \quad i \neq n, \\ R/\mathfrak{m} & \text{for} \quad i = n. \end{cases}$$

The following lemma will be very helpful in our development of the theory of *canonical modules.

13.3.2 Lemma. *Assume that R is graded. Let $\alpha : M \longrightarrow N$ be a homogeneous R-homomorphism of graded R-modules.*

(i) *If $\alpha_{\mathfrak{p}} : M_{\mathfrak{p}} \longrightarrow N_{\mathfrak{p}}$ is an isomorphism for all $\mathfrak{p} \in {}^*\operatorname{Spec}(R)$, then α is an isomorphism.*

(ii) *If $(R, \mathfrak{m})$ is *local and $\alpha_{\mathfrak{m}} : M_{\mathfrak{m}} \longrightarrow N_{\mathfrak{m}}$ is an isomorphism, then α is an isomorphism.*

Proof. For part (i), note that each of $\operatorname{Ker} \alpha$ and $\operatorname{Coker} \alpha$ is a graded R-module with no graded prime ideal in its support, and so must be zero, by 13.1.13(i). Part (ii) is proved similarly. □

13.3.3 Lemma. *Assume that $(R, \mathfrak{m})$ is a *local graded ring; set $n := \operatorname{ht} \mathfrak{m}$. Suppose that M is a finitely generated graded R-module such that, for all $\mathfrak{p} \in {}^*\operatorname{Spec}(R)$,*

$$\mu^i(\mathfrak{p}, M) = \begin{cases} 0 & \text{if} \quad i \neq \operatorname{ht} \mathfrak{p}, \\ 1 & \text{if} \quad i = \operatorname{ht} \mathfrak{p}. \end{cases}$$

(i) *There is a family $(j_{\mathfrak{p}})_{\mathfrak{p} \in {}^*\operatorname{Spec}(R)}$ of integers for which there exist homogeneous isomorphisms*

$$^*E^i(M) \cong \bigoplus_{\substack{\mathfrak{p} \in {}^*\operatorname{Spec}(R) \\ \operatorname{ht} \mathfrak{p} = i}} {}^*E(R/\mathfrak{p})(j_{\mathfrak{p}}) \qquad \text{for all } i \in \mathbb{N}_0.$$

(ii) *For any family $(j_{\mathfrak{p}})_{\mathfrak{p} \in {}^*\operatorname{Spec}(R)}$ of integers as in part (i), there are homogeneous isomorphisms*

(a) $^*\operatorname{Ext}^i_R(R/\mathfrak{m}, M) \cong 0$ *for* $i \neq n$,

(b) $^*\operatorname{Ext}^n_R(R/\mathfrak{m}, M) \cong (R/\mathfrak{m})(j_{\mathfrak{m}})$, *and*

(c) $H^n_{\mathfrak{m}}(M) \cong {}^*E(R/\mathfrak{m})(j_{\mathfrak{m}})$.

Proof. (i) This is immediate from Theorem 13.2.10.

(ii) Let $E^\bullet$ denote the minimal *injective resolution of M.

For each $\mathfrak{p} \in {}^*\operatorname{Spec}(R) \setminus \{\mathfrak{m}\}$, there exists a homogeneous element $r_\mathfrak{p} \in \mathfrak{m} \setminus \mathfrak{p}$, and so it follows from 13.2.2(iv) that ${}^*\operatorname{Hom}_R(R/\mathfrak{m}, {}^*E(R/\mathfrak{p})) = 0$ and $\Gamma_\mathfrak{m}({}^*E(R/\mathfrak{p})) = 0$. Hence the complex ${}^*\operatorname{Hom}_R(R/\mathfrak{m}, E^\bullet)$ has all terms other than its n-th equal to 0, while its n-th term is isomorphic (in ${}^*\mathscr{C}(R)$) to ${}^*\operatorname{Hom}_R(R/\mathfrak{m}, {}^*E(R/\mathfrak{m})(j_\mathfrak{m}))$. Parts (a) and (b) therefore follow from 13.2.9 and 13.2.3, while part (c) is a consequence of the fact (see 12.3.3) that we can calculate the graded R-module $H^n_\mathfrak{m}(M)$ by application of the functor $\Gamma_\mathfrak{m}$ to $E^\bullet$. □

13.3.4 Theorem. *Assume that $(R, \mathfrak{m})$ is a Cohen-Macaulay *local graded ring, and let C, C' be *canonical modules for R. Let $n := \operatorname{ht}\mathfrak{m}$. Then*

(i) *for each $\mathfrak{p} \in {}^*\operatorname{Spec}(R)$, the $R_\mathfrak{p}$-module $C_\mathfrak{p}$ is a canonical module for $R_\mathfrak{p}$, so that*

$$\mu^i(\mathfrak{p}, C) = \mu^i(\mathfrak{p}R_\mathfrak{p}, C_\mathfrak{p}) = \begin{cases} 0 & \text{if} \quad i \neq \operatorname{ht}\mathfrak{p}, \\ 1 & \text{if} \quad i = \operatorname{ht}\mathfrak{p}; \end{cases}$$

(ii) *the map $\beta : R \longrightarrow \operatorname{Hom}_R(C, C)$ defined by $\beta(r) = r\operatorname{Id}_C$ for all $r \in R$ is a homogeneous isomorphism;*

(iii) *there exists $j \in \mathbb{Z}$ and a homogeneous isomorphism $\phi : C \xrightarrow{\cong} C'(j)$; and*

(iv) *there is a homogeneous isomorphism $H^n_\mathfrak{m}(C) \xrightarrow{\cong} {}^*E(R/\mathfrak{m})$.*

Proof. (i) Let $\operatorname{ht}\mathfrak{m} =: n$. We have homogeneous isomorphisms

$${}^*\operatorname{Ext}^i_R(R/\mathfrak{m}, C) \cong \begin{cases} 0 & \text{for} \quad i \neq n, \\ R/\mathfrak{m} & \text{for} \quad i = n. \end{cases}$$

Hence

$$\mu^i(\mathfrak{m}R_\mathfrak{m}, C_\mathfrak{m}) = \mu^i(\mathfrak{m}, C) = \begin{cases} 0 & \text{if} \quad i \neq n, \\ 1 & \text{if} \quad i = n, \end{cases}$$

and so $C_\mathfrak{m}$ is a canonical module for $R_\mathfrak{m}$, by 11.2.7(i). Now, for each $\mathfrak{p} \in \operatorname{Spec}(R)$ with $\mathfrak{p} \subseteq \mathfrak{m}$, there is an $R_\mathfrak{p}$-isomorphism $C_\mathfrak{p} \cong (C_\mathfrak{m})_{\mathfrak{p}R_\mathfrak{m}}$, when the latter module is regarded as a module over $R_\mathfrak{p}$ via the natural isomorphism $R_\mathfrak{p} \xrightarrow{\cong} (R_\mathfrak{m})_{\mathfrak{p}R_\mathfrak{m}}$. Hence $C_\mathfrak{p}$ is a canonical module for $R_\mathfrak{p}$, by 11.2.7(ii). As each graded prime ideal of R is contained in $\mathfrak{m}$, the claim follows.

(ii) We deduce from (i) and 11.2.7(iv) that $\beta_\mathfrak{p}$ is an isomorphism for all $\mathfrak{p} \in {}^*\operatorname{Spec}(R)$. Since β is clearly a homogeneous homomorphism, it follows from 13.3.2 that β is a homogeneous isomorphism.

(iii) Let H denote the graded R-module ${}^*\operatorname{Hom}_R(C, C')$. It follows from part (i) and 11.2.7(ii),(v) that $H_\mathfrak{p}$ is a free $R_\mathfrak{p}$-module of rank 1, for all $\mathfrak{p} \in {}^*\operatorname{Spec}(R)$.

There is a graded free R-module F, of the form $\bigoplus_{i=1}^{t} R(-h_i)$ for some integers $h_1, \ldots, h_t$, and a homogeneous R-epimorphism $\psi : F \longrightarrow H$; let $K := \operatorname{Ker}\psi$. Now $\operatorname{Ext}^1_R(H,K)_{\mathfrak{p}} \cong \operatorname{Ext}^1_{R_{\mathfrak{p}}}(H_{\mathfrak{p}}, K_{\mathfrak{p}}) = 0$ for all $\mathfrak{p} \in {}^*\operatorname{Spec}(R)$, and so ${}^*\operatorname{Ext}^1_R(H,K) = 0$ by 13.1.13(i). Therefore the exact sequence

$$0 \longrightarrow K \xrightarrow{\subseteq} F \xrightarrow{\psi} H \longrightarrow 0$$

splits in ${}^*\mathscr{C}(R)$. Hence H is projective, and since it is graded, it follows from [6, 1.5.15(d)] that it is free. Its rank must be 1, so that, by [6, 1.5.15(a)], there exists a homogeneous element $\phi \in H$, of degree j say, which forms a base for H. Thus $\phi : C \longrightarrow C'(j)$ is a homogeneous R-homomorphism. It follows from 11.2.7(v) that $\phi_{\mathfrak{p}}$ is an isomorphism for all $\mathfrak{p} \in {}^*\operatorname{Spec}(R)$, so that ϕ is an isomorphism by 13.3.2(i).

(iv) By part (i) and 13.3.3, there is an integer $j_{\mathfrak{m}}$ for which there are homogeneous isomorphisms ${}^*\operatorname{Ext}^n_R(R/\mathfrak{m}, C) \cong (R/\mathfrak{m})(j_{\mathfrak{m}})$ and $H^n_{\mathfrak{m}}(C) \cong {}^*E(R/\mathfrak{m})(j_{\mathfrak{m}})$. But, by hypothesis, ${}^*\operatorname{Ext}^n_R(R/\mathfrak{m}, C) \cong R/\mathfrak{m}$, so that $R/\mathfrak{m} \cong (R/\mathfrak{m})(j_{\mathfrak{m}})$ and ${}^*E(R/\mathfrak{m}) \cong {}^*E(R/\mathfrak{m})(j_{\mathfrak{m}})$ in ${}^*\mathscr{C}(R)$. □

13.3.5 ♯Exercise. Assume that $(R, \mathfrak{m})$ is graded and *local.

(i) Show that $G_R := \{j \in \mathbb{Z} : R/\mathfrak{m} \cong (R/\mathfrak{m})(j) \text{ in } {}^*\mathscr{C}(R)\}$ is a subgroup of the Abelian group $\mathbb{Z}$.

(ii) Show that $G_R = 0$ if R is positively graded.

(iii) Let H be an arbitrary subgroup of $\mathbb{Z}$. Give an example of a (commutative Noetherian) graded *local ring S such that $G_S = H$.

(iv) Now assume in addition that R is Cohen-Macaulay and that C is a *canonical module for R. Show that

$$G_R = \{j \in \mathbb{Z} : C(j) \text{ is a *canonical module for } R\}.$$

13.3.6 Remark. It is a consequence of 13.3.4 and 13.3.5 that, if $(R, \mathfrak{m})$ is a Cohen-Macaulay *local *positively* graded ring with a *canonical module, then any two *canonical modules for R are isomorphic in the graded category ${}^*\mathscr{C}(R)$.

We have yet to see any examples of *canonical modules. The next lemma will help us to produce some.

13.3.7 Lemma. *Assume that $(R, \mathfrak{m})$ is a Cohen-Macaulay *local graded ring with $\operatorname{ht}\mathfrak{m} = n$, and let C be a finitely generated graded R-module such that*

$$\mu^i(\mathfrak{m}, C) = \begin{cases} 0 & \text{if } i \neq n, \\ 1 & \text{if } i = n, \end{cases}$$

that is, such that $C_{\mathfrak{m}}$ is canonical for the Cohen-Macaulay local ring $R_{\mathfrak{m}}$.

*Then there exists $a \in \mathbb{Z}$ such that $^*E^n(C) \cong {}^*E(R/\mathfrak{m})(-a)$ (in $^*\mathscr{C}(R)$): furthermore, for any such a, the shifted graded module $C(a)$ is a *canonical module for R.*

Proof. Let $\mathfrak{p} \in {}^*\operatorname{Spec}(R)$. Since $\mathfrak{p} \subseteq \mathfrak{m}$, it follows from 11.2.7(ii) that $C_{\mathfrak{p}}$ is a canonical module for $R_{\mathfrak{p}}$, so that

$$\mu^i(\mathfrak{p}, C) = \mu^i(\mathfrak{p}R_{\mathfrak{p}}, C_{\mathfrak{p}}) = \begin{cases} 0 & \text{if} \quad i \neq \operatorname{ht}\mathfrak{p}, \\ 1 & \text{if} \quad i = \operatorname{ht}\mathfrak{p}. \end{cases}$$

It follows from Lemma 13.3.3(i) that there exists $a \in \mathbb{Z}$ such that $^*E^n(C) \cong {}^*E(R/\mathfrak{m})(-a)$ (in $^*\mathscr{C}(R)$); furthermore, for any such a, parts (ii)(a),(b) of the same lemma show that there are homogeneous isomorphisms

$$^*\operatorname{Ext}^i_R(R/\mathfrak{m}, C) \cong \begin{cases} 0 & \text{for} \quad i \neq n, \\ (R/\mathfrak{m})(-a) & \text{for} \quad i = n. \end{cases}$$

The result therefore follows from 13.1.9(i). □

13.3.8 Corollary. *Assume that $(R, \mathfrak{m})$ is a Gorenstein *local graded ring. Then there exists $a \in \mathbb{Z}$ such that $R(a)$ is a *canonical module for R.*

Proof. This is immediate from 13.3.7 because $R_{\mathfrak{m}}$ is a canonical module for $R_{\mathfrak{m}}$. □

In the case when $(R, \mathfrak{m})$ is a Gorenstein *local positively graded ring, it follows from 13.3.8 and 13.3.6 that there is a unique $a \in \mathbb{Z}$ such that $R(a)$ is a *canonical module for R. We shall have more to say about this invariant at the end of the chapter; for the present we content ourselves with a calculation of the invariant in the case of a polynomial ring over a field, graded in the usual way.

13.3.9 Example. Let K be a field and let $R := K[X_1, \ldots, X_n]$, the ring of polynomials over K in n indeterminates (where $n \in \mathbb{N}$), graded in the usual way (so that X_i has degree 1, for all $i = 1, \ldots, n$).

Note that R is a Gorenstein *local positively graded ring, with unique *maximal ideal $\mathfrak{m} := (X_1, \ldots, X_n)$. As was explained just above, there is a unique $a \in \mathbb{Z}$ such that $R(a)$ is a *canonical module for R. We now calculate a.

We now use 13.3.4(iv), 13.1.9(ii) and 12.4.1 to see that there are homogeneous isomorphisms

$$^*E(R/\mathfrak{m}) \cong H^n_{\mathfrak{m}}(R(a)) = (H^n_{\mathfrak{m}}(R))(a) \cong K[X_1^-, \ldots, X_n^-](a).$$

Now the graded submodule $R/\mathfrak{m}$ of $^*E(R/\mathfrak{m})$ is generated by a homogeneous element of degree 0 which has annihilator $\mathfrak{m}$; furthermore, the only homogeneous elements of $K[X_1^-, \ldots, X_n^-]$ which have annihilator $\mathfrak{m}$ are the elements $\alpha X_1^{-1} \ldots X_n^{-1}$ where $\alpha \in K \setminus \{0\}$. It follows that $a = -n$.

13.4 Graded local duality

The next few exercises are directed towards a graded version of local duality.

13.4.1 ♯Exercise. Assume that $(R, \mathfrak{m})$ is a Cohen-Macaulay *local graded ring with $\operatorname{ht} \mathfrak{m} = n$, and that C is a *canonical module for R.

Bearing in mind the subtle distinction between the functors

$$\operatorname{Hom}_R(\,\cdot\,, C) \quad \text{and} \quad {}^*\operatorname{Hom}_R(\,\cdot\,, C)$$

(see [6, p. 32]), show that there is a natural transformation of functors

$$\phi : H^n_{\mathfrak{m}} \longrightarrow {}^*\operatorname{Hom}_R({}^*\operatorname{Hom}_R(\,\cdot\,, C), H^n_{\mathfrak{m}}(C))$$

(from the 'graded' category $^*\mathscr{C}(R)$ to itself) which, for a graded R-module M, is such that $(\phi_M(y))(f) = H^n_{\mathfrak{m}}(f)(y)$ for all $y \in H^n_{\mathfrak{m}}(M)$ and all $f \in {}^*\operatorname{Hom}_R(M, C)$. Make use of Exercise 11.2.4 to prove that ϕ_M is a (necessarily homogeneous) isomorphism for each finitely generated graded R-module M.

13.4.2 ♯Exercise: graded local duality for a *local ring which is Cohen-Macaulay and possesses a *canonical module. Assume that $(R, \mathfrak{m})$ is a Cohen-Macaulay *local graded ring with $\operatorname{ht} \mathfrak{m} = n$, and that C is a *canonical module for R. Let $^*D$ denote the functor $^*\operatorname{Hom}_R(\,\cdot\,, {}^*E(R/\mathfrak{m}))$ from $^*\mathscr{C}(R)$ to itself.

Show that there is a homomorphism

$$\Phi := (\phi_i)_{i \in \mathbb{N}_0} : \left(H^{n-i}_{\mathfrak{m}}\right)_{i \in \mathbb{N}_0} \longrightarrow \left({}^*D({}^*\operatorname{Ext}^i_R(\,\cdot\,, C))\right)_{i \in \mathbb{N}_0}$$

of (positive strongly) connected sequences of covariant functors from the 'graded' category $^*\mathscr{C}(R)$ to itself which is such that ϕ_{iM} is a (necessarily homogeneous) isomorphism for all $i \in \mathbb{N}_0$ whenever M is a finitely generated graded R-module.

Deduce that, for each finitely generated graded R-module M, there is a homogeneous isomorphism $H^{n-i}_{\mathfrak{m}}(M) \xrightarrow{\cong} {}^*D({}^*\operatorname{Ext}^i_R(M, C))$ for each $i \in \mathbb{Z}$.

Suppose that $R = \bigoplus_{n \in \mathbb{Z}} R_n$ is graded. It is clear from the structure of graded commutative Noetherian rings (see [6, Theorem 1.5.5]) that, if R_0 is a field, then R is a homomorphic image of a Gorenstein graded commutative Noetherian ring, and by a ring homomorphism which is *homogeneous* in the sense

13.1.2. Thus many of the graded commutative Noetherian rings that occur in practice are, in fact, (homogeneous) homomorphic images of Gorenstein graded commutative Noetherian rings. There is therefore good reason to formulate a version of graded local duality for this type of ring.

13.4.3 ♯Exercise: Graded Local Duality Theorem. Assume that $(R, \mathfrak{m})$ is a *local graded ring with $\operatorname{ht} \mathfrak{m} = n$. Assume also that there is a Gorenstein *local graded commutative Noetherian ring $(R', \mathfrak{m}')$ and a surjective homogeneous ring homomorphism $f : R' \longrightarrow R$. Let $\operatorname{ht} \mathfrak{m}' = n'$. Let $^*D$ denote the functor $^*\operatorname{Hom}_R(\,\cdot\,, {}^*E(R/\mathfrak{m}))$ from $^*\mathscr{C}(R)$ to itself.

Let M be a graded R-module, let N' be a graded R'-module, and let $j \in \mathbb{N}_0$. Now M can be regarded as a graded R'-module by means of f: then, $^*\operatorname{Ext}^j_{R'}(M, N')$ has a natural structure as graded R-module.

By 13.3.8, there exists $a' \in \mathbb{Z}$ such that $R'(a')$ is a *canonical module for R'. Show that there is a homomorphism

$$\Psi := (\psi^i)_{i \in \mathbb{N}_0} : \left(H^i_{\mathfrak{m}}\right)_{i \in \mathbb{N}_0} \longrightarrow \left({}^*D({}^*\operatorname{Ext}^{n'-i}_{R'}(\,\cdot\,, R'(a')))\right)_{i \in \mathbb{N}_0}$$

of (negative strongly) connected sequences of covariant functors from $^*\mathscr{C}(R)$ to $^*\mathscr{C}(R)$ which is such that ψ^i_M is a (necessarily homogeneous) isomorphism for all $i \in \mathbb{N}_0$ whenever M is a finitely generated graded R-module.

13.4.4 Theorem. *Assume that $(R, \mathfrak{m})$ is a Cohen-Macaulay *local graded ring with $\operatorname{ht} \mathfrak{m} = n$. Assume also that there is a Gorenstein *local graded commutative Noetherian ring $(R', \mathfrak{m}')$ and a surjective homogeneous ring homomorphism $f : R' \longrightarrow R$. Let $\operatorname{ht} \mathfrak{m}' = n'$.*

*By 13.3.8, there exists $a' \in \mathbb{Z}$ such that $R'(a')$ is a *canonical module for R': let K denote the finitely generated graded module $^*\operatorname{Ext}^{n'-n}_{R'}(R, R'(a'))$. Then K is a *canonical module for R.*

Proof. First of all, it follows from Reminder 11.2.7(iii) that $K_{\mathfrak{m}}$ is a canonical module for $R_{\mathfrak{m}}$, so that, by 13.3.7, there exists $a \in \mathbb{Z}$ such that $^*E^n(K) \cong {}^*E(R/\mathfrak{m})(-a)$ (in $^*\mathscr{C}(R)$) and $K(a)$ is a *canonical module for R. By 13.3.4(iv) and 13.1.9(ii), there is a homogeneous isomorphism

$$H^n_{\mathfrak{m}}(K) \xrightarrow{\cong} {}^*E(R/\mathfrak{m})(-a).$$

Let $^*D$ denote the functor $^*\operatorname{Hom}_R(\,\cdot\,, {}^*E(R/\mathfrak{m}))$ from $^*\mathscr{C}(R)$ to itself. We can now use 13.4.3 to see that there is a homogeneous R-isomorphism $^*D(K) \cong H^n_{\mathfrak{m}}(R)$.

We can use Exercise 6.1.8 to see that there is a natural transformation of functors $\theta : (\,\cdot\,) \otimes_R H^n_{\mathfrak{m}}(R) \longrightarrow H^n_{\mathfrak{m}}$ (from $\mathscr{C}(R)$ to $\mathscr{C}(R)$) with the property

that θ_F is an isomorphism whenever F is a finitely generated free R-module. It is easy to check that θ_M is homogeneous whenever M is a finitely generated graded R-module. Moreover, since $H_{\mathfrak{m}}^{n+1}(M) = 0$ for such a graded R-module (by 13.1.13(ii), since $(H_{\mathfrak{m}}^{n+1}(M))_{\mathfrak{m}} = 0$), it is easy to use the Five Lemma to see that θ_M is actually a (homogeneous) isomorphism whenever M is a finitely generated graded R-module. Therefore there are homogeneous isomorphisms

$$H_{\mathfrak{m}}^n(K) \cong K \otimes_R H_{\mathfrak{m}}^n(R) \cong K \otimes_R {}^*D(K) = K \otimes_R {}^*\operatorname{Hom}_R(K, {}^*E(R/\mathfrak{m})).$$

Next, we can modify the ideas of 10.2.16 to produce a homogeneous isomorphism

$$K \otimes_R {}^*\operatorname{Hom}_R(K, {}^*E(R/\mathfrak{m})) \cong {}^*\operatorname{Hom}_R({}^*\operatorname{Hom}_R(K,K), {}^*E(R/\mathfrak{m})).$$

However, by 13.3.4(ii), there is a homogeneous isomorphism

$$R \cong {}^*\operatorname{Hom}_R(K(a), K(a)) = {}^*\operatorname{Hom}_R(K,K);$$

It therefore follows that there are homogeneous isomorphisms

$$\begin{aligned} H_{\mathfrak{m}}^n(K) &\cong {}^*\operatorname{Hom}_R({}^*\operatorname{Hom}_R(K,K), {}^*E(R/\mathfrak{m})) \\ &\cong {}^*\operatorname{Hom}_R(R, {}^*E(R/\mathfrak{m})) \cong {}^*E(R/\mathfrak{m}). \end{aligned}$$

We have thus shown that there are homogeneous isomorphisms

$${}^*E(R/\mathfrak{m}) \cong H_{\mathfrak{m}}^n(K) \cong {}^*E(R/\mathfrak{m})(-a) \cong {}^*E^n(K),$$

and so another use of 13.3.7 shows that K is a *canonical module for R. □

Note that the above theorem and Exercise 13.4.2 enable us to formulate a Graded Local Duality Theorem for a Cohen-Macaulay *local graded ring which is a homogeneous homomorphic image of a Gorenstein (commutative Noetherian) *local graded ring.

In the situation of 13.4.2 and 13.4.3, the functor

$${}^*D = {}^*\operatorname{Hom}_R(\,\cdot\,, {}^*E(R/\mathfrak{m}))$$

would seem to be an obvious graded analogue of the functor of 10.2.1 used to construct Matlis duals over a local ring. However, there is another approach to ${}^*D$ which is particularly useful when the 0-th component R_0 of the *local ring R is a field, and this approach is the subject of the next exercise. The exercise is based on [6, Proposition 3.6.16], but our approach is a little different from that of Bruns and Herzog.

13.4.5 ♯Exercise: Graded Matlis Duality. Suppose $R = \bigoplus_{n\in\mathbb{Z}} R_n$ is graded and *local, and let $\mathfrak{m}$ be the unique *maximal ideal of R. Note that R_0 is local with maximal ideal $\mathfrak{m}_0 := \mathfrak{m} \cap R_0$; let $E_0 := E_{R_0}(R_0/\mathfrak{m}_0)$.

(i) Let $M = \bigoplus_{n\in\mathbb{Z}} M_n$ be a graded R-module. Now R_0 can be considered as a graded ring with trivial grading, and any R_0-module can be considered as a graded R_0-module concentrated in degree 0. Also, the grading on our graded R-module M provides a structure as graded R_0-module on M.

Show that $M^\vee := {}^*\mathrm{Hom}_{R_0}(M, E_0)$ has a natural structure as a graded R-module with i-th component $(M^\vee)_i = \mathrm{Hom}_{R_0}(M_{-i}, E_0)$ for all $i \in \mathbb{Z}$. (Remember that ${}^*\mathrm{Hom}_{R_0}(M, E_0)$ is a submodule of $\mathrm{Hom}_{R_0}(M, E_0)$, and the latter has a natural structure as an R-module.)

Deduce that $(\,\cdot\,)^\vee$ is an exact, additive functor from ${}^*\mathscr{C}(R)$ to itself.

(ii) Show that the functors $(\,\cdot\,)^\vee$ and ${}^*\mathrm{Hom}_R(\,\cdot\,, R^\vee)$, that is, the functors ${}^*\mathrm{Hom}_{R_0}(\,\cdot\,, E_0)$ and ${}^*\mathrm{Hom}_R(\,\cdot\,, {}^*\mathrm{Hom}_{R_0}(R, E_0))$, from ${}^*\mathscr{C}(R)$ to itself, are naturally equivalent. (Here is a hint: if we forget the gradings, there is a natural equivalence $\kappa : \mathrm{Hom}_{R_0}(\,\cdot\,, E_0) \longrightarrow \mathrm{Hom}_R(\,\cdot\,, \mathrm{Hom}_{R_0}(R, E_0))$; for a graded R-module M, consider an appropriate restriction of κ_M.)

(iii) Let $\phi_0 : R \longrightarrow E_0$ be the R_0-homomorphism whose restriction to R_0 is the composition of the natural epimorphism $R_0 \to R_0/\mathfrak{m}_0$ and the inclusion $R_0/\mathfrak{m}_0 \to E_0 = E_{R_0}(R_0/\mathfrak{m}_0)$, and whose restriction to R_i for all $i \in \mathbb{Z} \setminus \{0\}$ is zero. Show that $R^\vee$ is a *essential extension of its graded submodule $R\phi_0$.

(iv) Show that $R^\vee \cong {}^*E_R(R/\mathfrak{m})$ (in the category ${}^*\mathscr{C}(R)$), and deduce that the functors $(\,\cdot\,)^\vee$ and ${}^*D := {}^*\mathrm{Hom}_R(\,\cdot\,, {}^*E(R/\mathfrak{m}))$ (from ${}^*\mathscr{C}(R)$ to itself) are naturally equivalent.

(v) Show that, if the local ring R_0 is complete, then, whenever M is a finitely generated graded R-module, there is a homogeneous R-isomorphism $M \cong M^{\vee\vee}$.

Thus, in the situation of Exercise 13.4.5, it is reasonable for us to regard the functor $(\,\cdot\,)^\vee = {}^*\mathrm{Hom}_{R_0}(\,\cdot\,, E_{R_0}(R_0/\mathfrak{m}_0))$ as the 'graded Matlis duality functor'. In the particular case in which R_0 is a field K (and this is the situation in many practical applications of graded ring theory), $E_{R_0}(R_0/\mathfrak{m}_0) = K$, and, for a graded R-module $M = \bigoplus_{n\in\mathbb{Z}} M_n$, the grading of the 'graded Matlis dual' is given by the attractively simple formula

$$M^\vee = {}^*\mathrm{Hom}_K(M, K) = \bigoplus_{n\in\mathbb{Z}} \mathrm{Hom}_K(M_{-n}, K).$$

13.4.6 Example. Here we review graded local duality for a ring of polynomials over a field K in n indeterminates $X_1, \ldots, X_n$. Let $R = \bigoplus_{j\in\mathbb{N}_0} R_j = K[X_1, \ldots, X_n]$, graded in the usual way, and let $\mathfrak{m}$ denote the unique *maximal

graded ideal $(X_1, \ldots, X_n)$ of R. We apply 13.4.3 to R: we can take $R' = R$ and $f : R' \longrightarrow R$ to be the identity ring homomorphism; also, $R_0 = K$ and $\mathfrak{m}_0 := \mathfrak{m} \cap R_0 = 0$, so that $E_0 := E_{R_0}(R_0/\mathfrak{m}_0)$ is just K. We saw in Example 13.3.9 that $-n$ is the unique $a \in \mathbb{Z}$ such that $R(a)$ is a *canonical module for R.

It therefore follows from 13.4.3 and 13.4.5 that graded local duality for this R takes the following form: there is a homomorphism

$$\Psi := (\psi^i)_{i \in \mathbb{N}_0} : \left(H^i_{\mathfrak{m}}\right)_{i \in \mathbb{N}_0} \longrightarrow \left(^*\operatorname{Hom}_K(^*\operatorname{Ext}^{n-i}_R(\,\cdot\,, R(-n)), K)\right)_{i \in \mathbb{N}_0}$$

of (negative strongly) connected sequences of covariant functors from $^*\mathscr{C}(R)$ to itself which is such that ψ^i_M is a (homogeneous) isomorphism for all $i \in \mathbb{N}$ whenever M is a finitely generated graded R-module. In particular, for such i and M, there are homogeneous isomorphisms

$$H^i_{\mathfrak{m}}(M) \cong {}^*\operatorname{Hom}_K(^*\operatorname{Ext}^{n-i}_R(M, R(-n)), K)$$

and (since $R_0 = K$ is a complete local ring)

$$^*\operatorname{Hom}_K(H^i_{\mathfrak{m}}(M), K) \cong {}^*\operatorname{Ext}^{n-i}_R(M, R(-n)).$$

13.4.7 Definition and Remarks. Let $(R, \mathfrak{m})$ be a *local positively graded ring which is Cohen-Macaulay and has a *canonical module. By 13.3.6, this is uniquely determined up to homogeneous isomorphism: we denote by ω_R one choice of *canonical module for R. The *a-invariant of* R is defined to be

$$a(R) := -\operatorname{beg}(\omega_R) = -\min\{n \in \mathbb{Z} : (\omega_R)_n \neq 0\}.$$

(See 13.1.1 for the definition of the beginning of a graded R-module.)

(i) Note that, when R is Gorenstein, $a(R)$ is the unique integer a for which $R(a)$ is a *canonical module for R. Thus the a-invariant of a polynomial ring over a field, graded in the usual way, was calculated in 13.3.9.

(ii) In the general case, we can use graded local duality, as described in 13.4.2, to see that (with the notation $^*D$ of that exercise) there are homogeneous isomorphisms

$$H^n_{\mathfrak{m}}(R) \cong {}^*D(^*\operatorname{Hom}_R(R, \omega_R)) \cong {}^*D(\omega_R),$$

and so it follows from Graded Matlis Duality 13.4.5 that

$$a(R) = -\operatorname{beg}(\omega_R) = \operatorname{end}(^*D(\omega_R)) = \operatorname{end}(H^n_{\mathfrak{m}}(R)).$$

The following proposition gives some hints about ways in which graded local duality and graded Matlis duality can be used in tandem.

13.4.8 Proposition. *Suppose $R = \bigoplus_{n\in\mathbb{Z}} R_n$ is graded and *local, and let $\mathfrak{m}$ be the unique *maximal ideal of R. Let $\operatorname{ht}\mathfrak{m} = n$. Assume that R is Cohen-Macaulay and has a *canonical module.*

Then R is Gorenstein if and only if there is a homogeneous isomorphism

$$(0 :_{H^n_{\mathfrak{m}}(R)} \mathfrak{m}) \cong (R/\mathfrak{m})(e)$$

for some $e \in \mathbb{Z}$.

Proof. Let C be a *canonical module for R, and let $^*D$ denote the functor $^*\operatorname{Hom}_R(\,\cdot\,, {}^*E(R/\mathfrak{m}))$ from $^*\mathscr{C}(R)$ to itself. It follows from graded local duality (see 13.4.2) that there is a homogeneous isomorphism $^*D(C) \cong H^n_{\mathfrak{m}}(R)$. There are therefore homogeneous isomorphisms

$$\begin{aligned}(0 :_{H^n_{\mathfrak{m}}(R)} \mathfrak{m}) &\cong {}^*\operatorname{Hom}_R(R/\mathfrak{m}, H^n_{\mathfrak{m}}(R))\\ &\cong {}^*\operatorname{Hom}_R(R/\mathfrak{m}, {}^*\operatorname{Hom}_R(C, {}^*E(R/\mathfrak{m})))\\ &\cong {}^*\operatorname{Hom}_R(R/\mathfrak{m} \otimes_R C, {}^*E(R/\mathfrak{m}))\\ &\cong {}^*\operatorname{Hom}_R(C/\mathfrak{m}C, {}^*E(R/\mathfrak{m})).\end{aligned}$$

($\Rightarrow$) By 13.3.4(iii) and 13.3.8, there exists $a \in \mathbb{Z}$ and a homogeneous isomorphism $C \cong R(a)$. The claim therefore follows from 13.2.3 (with $e = -a$).

($\Leftarrow$) In view of the first paragraph of this proof, application of $^*D$ to the given homogeneous isomorphism (in conjunction with another use of 13.2.3) yields a further homogeneous isomorphism $^*D({}^*D(C/\mathfrak{m}C)) \cong (R/\mathfrak{m})(-e)$. However, the canonical homomorphism $C/\mathfrak{m}C \longrightarrow {}^*D({}^*D(C/\mathfrak{m}C))$ is homogeneous and monomorphic. Since $C_{\mathfrak{m}}/\mathfrak{m}R_{\mathfrak{m}}C_{\mathfrak{m}} \neq 0$ (because $C_{\mathfrak{m}}$ is canonical for $R_{\mathfrak{m}}$), it follows that $C_{\mathfrak{m}}$ is a cyclic $R_{\mathfrak{m}}$-module, so that $R_{\mathfrak{m}}$ is Gorenstein. One can then use [6, 3.6.6] to deduce that R itself is Gorenstein. □

The result established in the following exercise is due to J. Herzog and E. Kunz [25].

13.4.9 Exercise. Suppose $a_1, \ldots, a_h \in \mathbb{N} \setminus \{1\}$ satisfy $\operatorname{GCD}(a_1, \ldots, a_h) = 1$. Let $S := a_1\mathbb{N}_0 + \ldots + a_h\mathbb{N}_0$, the additive subsemigroup of $\mathbb{N}_0$ generated by $a_1, \ldots, a_h$. Let K be a field and let R be the subring of the polynomial ring $K[X]$ given by $R := K[X^{a_1}, \ldots, X^{a_h}]$. Of course, R is a 1-dimensional Cohen-Macaulay ring; furthermore, it is positively graded, by virtue of the grading inherited from the usual grading on $K[X]$, and, with this grading, it is *local. We denote by R_+ the unique graded maximal ideal of R.

(i) Show that there exists $c \in \mathbb{N}$ such that $n \in S$ for all $n \in \mathbb{N}$ with $n \geq c$. Thus $L := \mathbb{N}_0 \setminus S$ is a non-empty finite set, which we refer to as *the set of non-members of* S, and so has a greatest member, e say. The semigroup S is

said to be symmetric, precisely when, for all integers n with $1 \leq n \leq e$, we have $n \in S$ if and only if $e - n \in S$.

(ii) Show that R has a *canonical module.

(iii) Show that $K[X]_X = K[X, X^{-1}]$ can be naturally identified with the ideal transform $D_{R_+}(R)$ in the sense that there is a unique homogeneous R-isomorphism $\phi' : K[X, X^{-1}] \longrightarrow D_{R_+}(R)$ such that the diagram

$$\begin{tikzcd} R \arrow[r, "\phi"] \arrow[dr, "\eta_R"'] & K[X, X^{-1}] \arrow[d, "\phi'", "\cong"'] \\ & D_{R_+}(R) \end{tikzcd} ,$$

in which ϕ is the inclusion map, commutes.

(iv) Use 12.4.2(i) to show that, for $n \in \mathbb{Z}$,

$$\dim_K(H^1_{R_+}(R)_n) = \begin{cases} 1 & \text{if} \quad n < 0 \text{ or } n \in L, \\ 0 & \text{if} \quad n \in S, \end{cases}$$

and deduce that $\operatorname{end}(H^1_{R_+}(R)) = e$.

(v) Show that if R is Gorenstein, then S is symmetric.

(vi) Now suppose that S is symmetric. Show that, if $n \in L \cup \{-i : i \in \mathbb{N}\}$, then $s := e - n \in S$ and $X^s H^1_{R_+}(R)_n \neq 0$. Deduce that R is Gorenstein.

13.4.10 ♯Exercise. Let K be a field and let $R := K[X_1, \ldots, X_n]$, the ring of polynomials over K in n indeterminates (where $n \in \mathbb{N}$), graded in the usual way. Let $r \in \mathbb{N}$, and consider the r-th Veronesean subring $R^{(r)}$ of R, as in 12.4.6. In Exercise 12.4.8, the reader was asked to show that $R^{(r)}$ is Cohen-Macaulay. Prove that $R^{(r)}$ is Gorenstein if and only if $n \equiv 0 \pmod{r}$.

13.4.11 Exercise. Let $(R, \mathfrak{m})$ be a Cohen-Macaulay *local positively graded ring which has a *canonical module. Let $b \in R$ be a homogeneous element of positive degree d which is a non-zerodivisor on R. Show that R/bR has a *canonical module and that $a(R/bR) = a(R) + d$.

14

Links with projective varieties

One of the reasons for the interest in graded local cohomology is provided by the numerous applications to projective algebraic geometry. This short chapter is intended to provide a little geometric insight, with the aim of motivating the work on Castelnuovo regularity in Chapter 15.

In 2.3.2, we saw that the ideal transform has a geometric meaning in certain cases: if V is an affine variety over K, an algebraically closed field, $\mathfrak{b}$ is a non-zero ideal of $\mathcal{O}(V)$, and U denotes the open subset of V determined by $\mathfrak{b}$, then the ideal transform $D_{\mathfrak{b}}(\mathcal{O}(V))$ is isomorphic, as an $\mathcal{O}(V)$-algebra, to the ring of regular functions on U. One of our first aims for this chapter is the establishment of a graded anologue of this result. This graded analogue applies to irreducible affine algebraic cones.

14.1 Affine algebraic cones

14.1.1 Notation and Terminology. We shall employ the notation and terminology concerning graded rings and modules described in 12.1.1. In addition, when R is graded and the ideal $\mathfrak{a}$ is graded, and M is a graded R-module, so that (see 12.3.3 and 12.3.4) the $H^i_{\mathfrak{a}}(M)$ ($i \in \mathbb{N}_0$) are all graded R-modules, we use $H^i_{\mathfrak{a}}(M)_n$ to denote the n-th component of the graded module $H^i_{\mathfrak{a}}(M)$ (for $i \in \mathbb{N}_0$ and $n \in \mathbb{Z}$); also $D_{\mathfrak{a}}(M)$ is graded (by 12.2.10), and we use $D_{\mathfrak{a}}(M)_n$ to denote its n-th component.

Now assume that $R = \bigoplus_{n \in \mathbb{N}_0} R_n$ is positively graded. We set

$$R_+ := \bigoplus_{n \in \mathbb{N}} R_n = \bigoplus_{n > 0} R_n = 0 \oplus R_1 \oplus R_2 \oplus \ldots \oplus R_n \oplus \ldots,$$

the *irrelevant ideal* of R. Of course, R_+ is graded, and so, for a graded R-module M, we can define the R_0-modules $H^i_{R_+}(M)_n$ ($i \in \mathbb{N}_0$, $n \in \mathbb{Z}$).

14.1.2 Geometric Notation and Reminders. Let K be an algebraically closed field, and let $r \in \mathbb{N}$. We shall use the notation of 2.3.1, and we shall denote the origin $(0,\ldots,0)$ of $\mathbb{A}^r(K)$ simply by 0. For a subset C of a quasi-affine variety W over K, we shall extend the notation of 6.4.1 to denote the *vanishing ideal*

$$\{f \in \mathcal{O}(W) : f(q) = 0 \text{ for all } q \in C\}$$

of C by $I_W(C)$.

(i) By a *cone* (with vertex 0) in $\mathbb{A}^r(K)$ we mean a set $C \subseteq \mathbb{A}^r(K)$ such that $0 \in C$ and, whenever $q \in C$, then $\lambda q \in C$ for all $\lambda \in K$. Such a cone C is called an *affine algebraic cone in* $\mathbb{A}^r(K)$ if and only if it is also an affine algebraic set; also C is said to be *non-degenerate* precisely when $C \neq \{0\}$.

Since a graded ideal can be generated by homogeneous elements, it is clear that, if $\mathfrak{b}$ is a proper graded ideal of $K[X_1,\ldots,X_r]$, then $V_{\mathbb{A}^r(K)}(\mathfrak{b})$ is an affine algebraic cone in $\mathbb{A}^r(K)$. It is easy to see that, conversely, if C is an affine algebraic cone in $\mathbb{A}^r(K)$, then $I_{\mathbb{A}^r(K)}(C)$ is a proper graded ideal. Thus the affine algebraic cones in $\mathbb{A}^r(K)$ are precisely the algebraic sets in $\mathbb{A}^r(K)$ which have proper graded vanishing ideals.

(ii) Now let C be an irreducible affine algebraic cone in $\mathbb{A}^r(K)$. Since $I_{\mathbb{A}^r(K)}(C)$ is a graded prime ideal of $K[X_1,\ldots,X_r]$, the ring $\mathcal{O}(C)$ of regular functions on C inherits a grading from $K[X_1,\ldots,X_r]$, in such a way that the restriction homomorphism $K[X_1,\ldots,X_r] \longrightarrow \mathcal{O}(C)$ is homogeneous (see 13.1.2). Of course, for each $n \in \mathbb{N}_0$, we denote the n-th component of $\mathcal{O}(C)$ by $\mathcal{O}(C)_n$. Note that $\mathcal{O}(C)_0$ can be identified with K. It is also worth noting that $\mathcal{O}(C)$ is *local with unique *maximal graded ideal $\mathcal{O}(C)_+$; furthermore, $\mathcal{O}(C)_+$ is actually a maximal ideal in this case.

(iii) With the notation of part (ii), let $\mathfrak{b}$ be a non-zero graded ideal of $\mathcal{O}(C)$, let $V_C(\mathfrak{b})$ denote the closed subset of C determined by $\mathfrak{b}$, and let U be the open subset $C \setminus V_C(\mathfrak{b})$ of C. In fact, if $\mathfrak{c}$ denotes the inverse image of $\mathfrak{b}$ in $K[X_1,\ldots,X_r]$ under the restriction homomorphism, then $V_C(\mathfrak{b}) = V_{\mathbb{A}^r(K)}(\mathfrak{c})$, and U is obtained from C by removal of another affine algebraic cone (or the empty set).

Let $n \in \mathbb{Z}$. A regular function $f \in \mathcal{O}(U)$ is said to be *homogeneous of degree* n precisely when, for each $p \in U$, there exists an open set $W \subseteq U$ with $p \in W$, an integer $d \in \mathbb{N}_0$, and $g \in \mathcal{O}(C)_d$, $h \in \mathcal{O}(C)_{n+d}$ such that, for each $q \in W$, we have $g(q) \neq 0$ and $f(q) = h(q)/g(q)$. The set of all regular functions on U which are homogeneous of degree n is denoted by $\mathcal{O}(U)_n$. The fact that this definition is not ambiguous in the case when $U = C$ is one consequence of the next proposition.

14.1.3 Proposition. *Let the situation be as in* 14.1.2(iii). *Thus* K *is an algebraically*

closed field, $r \in \mathbb{N}$, C is an irreducible affine algebraic cone in $\mathbb{A}^r(K)$, $\mathfrak{b}$ is a non-zero graded ideal of $\mathcal{O}(C)$, and $U = C \setminus V_C(\mathfrak{b})$.

The subsets $\mathcal{O}(U)_n$ ($n \in \mathbb{Z}$) defined in 14.1.2(iii) *provide $\mathcal{O}(U)$ with a structure as a graded ring with respect to which the homomorphisms $\lceil_U$ and $\nu_{C,\mathfrak{b}}$ in the commutative diagram*

$$\begin{tikzcd} \mathcal{O}(C) \arrow[r, "\lceil_U"] \arrow[dr, "\eta_{\mathcal{O}(C)}"'] & \mathcal{O}(U) \arrow[d, "\nu_{C,\mathfrak{b}}", "\cong"'] \\ & D_{\mathfrak{b}}(\mathcal{O}(C)) \end{tikzcd}$$

of 2.3.2 *are homogeneous. (It should be noted that, since $\mathfrak{b}$ is graded, it follows from* 12.2.10 *that $D_{\mathfrak{b}}(\mathcal{O}(C))$ is a graded $\mathcal{O}(C)$-module and that $\eta_{\mathcal{O}(C)}$ is homogeneous.)*

Proof. Let us abbreviate $\nu_{C,\mathfrak{b}}$ by ν and $\eta_{\mathcal{O}(C)}$ by η. Since ν is a ring isomorphism (by 2.3.2), it is clearly enough for us to show that $\mathcal{O}(U)_n = \nu^{-1}(D_{\mathfrak{b}}(\mathcal{O}(C))_n)$ for each $n \in \mathbb{Z}$, and this is what we shall do.

Let $y \in (D_{\mathfrak{b}}(\mathcal{O}(C))_n$. Since $\operatorname{Coker}\eta$, being isomorphic to $H^1_{\mathfrak{b}}(\mathcal{O}(C))$, is $\mathfrak{b}$-torsion, there exists $t \in \mathbb{N}$ such that $\mathfrak{b}^t y \in \operatorname{Im}\eta$. Let $p \in U$. Since $U = C \setminus V_C(\mathfrak{b})$ and $\mathfrak{b}$ is graded, there exists a homogeneous element $g \in \mathfrak{b}^t$, of degree $d \in \mathbb{N}_0$ say, such that $g(p) \neq 0$. Then $W := U \setminus V_C(g\mathcal{O}(C))$ is an open subset of U which contains p.

As $gy \in \operatorname{Im}\eta$, there is an element $h \in \mathcal{O}(C)$ with $gy = \eta(h)$. As $gy \in D_{\mathfrak{b}}(\mathcal{O}(C))_{n+d}$ and as η is homogeneous and injective, we must have $h \in \mathcal{O}(C)_{n+d}$. Now

$$\begin{aligned} g\lceil_U \nu^{-1}(y) &= \nu^{-1}(\eta(g))\nu^{-1}(y) = \nu^{-1}(\eta(g)y) = \nu^{-1}(gy) \\ &= \nu^{-1}(\eta(h)) = h\lceil_U. \end{aligned}$$

It follows that, for each $q \in W$, we have $g(q) \neq 0$ and $\nu^{-1}(y)(q) = h(q)/g(q)$. Hence $\nu^{-1}(y) \in \mathcal{O}(U)_n$, and we have proved that $\mathcal{O}(U)_n \supseteq \nu^{-1}(D_{\mathfrak{b}}(\mathcal{O}(C))_n)$.

Now let $f \in \mathcal{O}(U)_n$. Choose $p \in U$; then there exists an open set $W \subseteq U$ with $p \in W$, an integer $d \in \mathbb{N}_0$, and $g \in \mathcal{O}(C)_d$, $h \in \mathcal{O}(C)_{n+d}$ such that, for each $q \in W$, we have $g(q) \neq 0$ and $f(q) = h(q)/g(q)$. This shows, in particular, that $g\lceil_W . f\lceil_W = h\lceil_W$. As W is a non-empty open subset of the irreducible topological space U, it follows that $g\lceil_U . f = h\lceil_U$. Now apply ν: we obtain

$$\eta(g)\nu(f) = \nu(g\lceil_U)\nu(f) = \nu(g\lceil_U . f) = \nu(h\lceil_U) = \eta(h).$$

As η is homogeneous, $\eta(g) \in D_{\mathfrak{b}}(\mathcal{O}(C))_d$ and $\eta(h) \in D_{\mathfrak{b}}(\mathcal{O}(C))_{n+d}$. As η is

injective and $g \neq 0$, we have $\eta(g) \neq 0$; also, as $D_{\mathfrak{b}}(\mathcal{O}(C))$ is a domain, it follows that $\nu(f)$ must be homogeneous of degree n. We have therefore shown that $\mathcal{O}(U)_n \subseteq \nu^{-1}(D_{\mathfrak{b}}(\mathcal{O}(C))_n)$, and so the proof is complete. □

Theorem 2.3.2, and its graded refinement 14.1.3, provide a link between local cohomology and algebraic varieties. Towards the end of the book, we shall encounter more general versions of these two results, because they are related to the Deligne Isomorphism Theorem 20.1.14 (see 20.1.16) and its graded version 20.2.7.

We explore now the special case of Proposition 14.1.3 in which $\dim C > 0$ and the graded ideal $\mathfrak{b}$ is the irrelevant ideal $\mathcal{O}(C)_+$ (see 14.1.1) of $\mathcal{O}(C)$: then the open set $U = C \setminus \{0\}$ is just the *punctured cone* $\mathring{C}$ of the given irreducible affine algebraic cone C.

14.1.4 Corollary. *Consider the special case of* 14.1.3 *in which the irreducible affine algebraic cone C has* $\dim C > 1$ *and* $\mathfrak{b} = \mathcal{O}(C)_+$. *Then*

$$U = C \setminus V_C(\mathcal{O}(C)_+) = C \setminus \{0\} = \mathring{C},$$

the punctured cone of C; also

(i) *the restriction ring homomorphism* $\Gamma_{\mathring{C}} : \mathcal{O}(C) \longrightarrow \mathcal{O}(\mathring{C})$ *makes* $\mathcal{O}(\mathring{C})$ *into a finitely generated graded $\mathcal{O}(C)$-module;*

(ii) $\operatorname{end}(H^1_{\mathcal{O}(C)_+}(\mathcal{O}(C))) < \infty$ *(see* 13.1.1 *for the definition of the end of a graded module);*

(iii) $H^1_{\mathcal{O}(C)_+}(\mathcal{O}(C))_n$ *is a finite-dimensional vector space over K, for all $n \in \mathbb{Z}$; and*

(iv) $H^1_{\mathcal{O}(C)_+}(\mathcal{O}(C))_n = 0$ *for all* $n \leq 0$.

Proof. Set $R := \mathcal{O}(C)$. Now (R, R_+) is *local, by 14.1.2(ii), and a domain. Hence, by 13.1.14, we have $\operatorname{ht} R_+ = \dim R = \dim C > 1$. Therefore, for all $\mathfrak{p} \in {}^*\operatorname{Spec}(R) \setminus \operatorname{Var}(R_+)$, we have $\mathfrak{p} \subset R_+$ and

$$\operatorname{depth} R_{\mathfrak{p}} + \operatorname{ht} R_+/\mathfrak{p} \geq 2 > 1.$$

It thus follows from the Graded Finiteness Theorem 13.1.17 that $H^1_{R_+}(R)$ is finitely generated. By 2.2.4(i)(c), 12.4.2 and 14.1.3, there is an exact sequence $R \xrightarrow{\Gamma_{\mathring{C}}} \mathcal{O}(\mathring{C}) \longrightarrow H^1_{R_+}(R) \longrightarrow 0$ of graded R-modules and homogeneous R-homomorphisms. It is now immediate that $\Gamma_{\mathring{C}}$ makes $\mathcal{O}(\mathring{C})$ into a finitely generated graded R-module.

Note also that, since $H^1_{R_+}(R)$ is finitely generated and R_+-torsion, we must have $H^1_{R_+}(R)_n = 0$ for all $n >> 0$ (that is, for all n greater than some fixed integer n_0), and so $\operatorname{end}(H^1_{R_+}(R)) < \infty$. We have therefore completed the proofs

of parts (i) and (ii), while part (iii) is now immediate from the facts that $R_0 = K$ and, for each $n \in \mathbb{Z}$, the component $H^1_{R_+}(R)_n$ is a finitely generated R_0-module.

It remains for us to prove part (iv). Use $\lceil_{\mathring{C}}$ to identify R as a subring of $\mathcal{O}(\mathring{C})$. It is enough for us to show that $K = R_0 = \mathcal{O}(C)_0 = \mathcal{O}(\mathring{C})_0$ and that $\mathcal{O}(\mathring{C})_n = 0$ for all $n < 0$, and this we do.

First, by part (i), the integral domain $\mathcal{O}(\mathring{C})_0$ is an integral extension of the algebraically closed field $K = R_0$, and so $R_0 = \mathcal{O}(\mathring{C})_0$. Second, since $\mathcal{O}(\mathring{C})$ is a finitely generated graded R-module and R is positively graded, $\mathcal{O}(\mathring{C})_n = 0$ for all $n << 0$. Hence, for each $n < 0$ and each $\gamma \in \mathcal{O}(\mathring{C})_n$, there exists $t \in \mathbb{N}$ such that $\gamma^t = 0$, so that $\gamma = 0$ since $\mathcal{O}(\mathring{C})$ is a domain. This completes the proof. □

14.1.5 Exercise. Calculate $\mathcal{O}(C)$, $\mathcal{O}(\mathring{C})$ and $H^1_{\mathcal{O}(C)_+}(\mathcal{O}(C))$ for an irreducible affine algebraic cone C of dimension 1 in $\mathbb{A}^r(K)$, where K is an algebraically closed field and $r \in \mathbb{N}$. (Here is a hint. Let $c := (c_1, \ldots, c_r) \in C \setminus \{0\}$. Without loss of generality, one can assume that $c_1 \neq 0$: with this assumption, show that

$$I_{\mathbb{A}^r(K)}(C) = (c_2X_1 - c_1X_2, c_3X_1 - c_1X_3, \ldots, c_rX_1 - c_1X_r).)$$

14.1.6 Exercise. Assume that $R = \bigoplus_{n \in \mathbb{N}_0} R_n$ is positively graded and an integral domain, and that the ideal $\mathfrak{a}$ is graded and non-zero.

(i) Show that, if $\mathfrak{a} \cap R_0 \neq 0$, then $D_{\mathfrak{a}}(R)_n = H^1_{\mathfrak{a}}(R)_n = 0$ for all $n < 0$.

(ii) Assume that the subring R_0 is a homomorphic image of a regular ring, and that $\operatorname{ht} \mathfrak{a} > 1$. Show that $\eta_{\mathfrak{a}}$ makes $D_{\mathfrak{a}}(R)$ into a finitely generated R-module, and deduce that $D_{\mathfrak{a}}(R)_n$ and $H^1_{\mathfrak{a}}(R)_n$ are finitely generated R_0-modules for all $n \in \mathbb{Z}$. Show further that $D_{\mathfrak{a}}(R)_n = H^1_{\mathfrak{a}}(R)_n = 0$ for all $n < 0$.

(iii) Assume that R_0 is an algebraically closed field K, and that $\operatorname{ht} \mathfrak{a} > 1$. Using $\eta_{\mathfrak{a}}$ to identify R as a subring of $D_{\mathfrak{a}}(R)$, show that $D_{\mathfrak{a}}(R)_0 = K$ and $H^1_{\mathfrak{a}}(R)_0 = 0$.

14.1.7 Exercise. Let the situation and notation be as in 14.1.3, and assume that $\operatorname{ht} \mathfrak{b} > 1$. Use 14.1.6(ii),(iii) to show that $\mathcal{O}(U)$ is a finitely generated $\mathcal{O}(C)$-module for which $\mathcal{O}(U)_0 = K$.

14.2 Projective varieties

In the situation of 14.1.3, we have seen (see 2.3.3) that we can regard non-zero elements of the local cohomology module $H^1_{\mathfrak{b}}(\mathcal{O}(C))$ as obstructions to the extension of regular functions on U to regular functions on C; we have also obtained, in 14.1.4, in the case when U is the punctured cone $\mathring{C}$, information about some of the components $H^1_{\mathcal{O}(C)_+}(\mathcal{O}(C))_n = H^1_{\mathfrak{b}}(\mathcal{O}(C))_n$. In the light of the

connections between irreducible affine algebraic cones and projective varieties (reviewed in 14.2.1 below), it would be reasonable for one to suspect that there are links between graded local cohomology and projective varieties. Such suspicions would be well founded, and we plan to expose some of the links in this and subsequent chapters.

14.2.1 Reminders and Notation. Here we specify the notation and terminology that we shall use for discussion of projective varieties. Let K be an algebraically closed field, and let $r \in \mathbb{N}$. We shall find it convenient to vary slightly the notation of 2.3.1 and regard the polynomial ring $K[X_0, X_1, \ldots, X_r]$ as the coordinate ring $\mathcal{O}(\mathbb{A}^{r+1}(K))$ of affine $(r+1)$-space $\mathbb{A}^{r+1}(K)$ over K. As in 14.1.2, we shall denote the origin $(0, \ldots, 0)$ of $\mathbb{A}^{r+1}(K)$ simply by 0.

(i) For $c := (c_0, \ldots, c_r) \in \mathbb{A}^{r+1}(K) \setminus \{0\}$, we use $(c_0 : \cdots : c_r)$ to denote the line $\{\lambda c : \lambda \in K\}$ in $\mathbb{A}^{r+1}(K)$ through c and 0. We shall use $\mathbb{P}^r(K)$ to denote projective r-space over K, that is, the set

$$\left\{(c_0 : \cdots : c_r) : (c_0, \ldots, c_r) \in \mathbb{A}^{r+1}(K) \setminus \{0\}\right\}$$

of all lines through the origin in $\mathbb{A}^{r+1}(K)$, endowed with the Zariski topology. We remind the reader that the closed sets in this topology are precisely the projective algebraic sets, that is, the sets of the form

$$V_{\mathbb{P}^r(K)}(\mathfrak{a}) := \{(c_0 : \cdots : c_r) \in \mathbb{P}^r(K) : f(c_0, \ldots, c_r) = 0 \text{ for all } f \in \mathfrak{a}\},$$

where $\mathfrak{a}$ is a proper graded ideal of $K[X_0, \ldots, X_r]$. (The choice $\mathfrak{a} = (X_0, \ldots, X_r)$ yields the empty subset.) If $f_1, \ldots, f_t$ are non-constant homogeneous polynomials in $K[X_0, \ldots, X_r]$, then the projective algebraic set $V_{\mathbb{P}^r(K)}((f_1, \ldots, f_t))$ is denoted by $V_{\mathbb{P}^r(K)}(f_1, \ldots, f_t)$. Of course, every projective algebraic set in $\mathbb{P}^r(K)$ can be represented in this form.

We shall use $\mathbb{P}^r$ to denote complex projective r-space $\mathbb{P}^r(\mathbb{C})$. All unexplained mentions of topological notions, including 'open' and 'closed' subsets, in connection with projective spaces will refer to the Zariski topology.

(ii) By the statement '$V \subseteq \mathbb{P}^r(K)$ is a *projective variety*' we shall mean that V is an irreducible closed subset of $\mathbb{P}^r(K)$ (with the induced topology), and by the statement '$W \subseteq \mathbb{P}^r(K)$ is a *quasi-projective variety*' we shall mean that W is a non-empty open subset of a projective variety $V \subseteq \mathbb{P}^r(K)$ (again with the induced topology). (It is wise for us to include the '$\subseteq \mathbb{P}^r(K)$' in the notation because (and some of our examples below will remind the reader of this) isomorphic projective varieties, embedded in projective spaces in different ways, can have non-isomorphic homogeneous coordinate rings! (See parts (vi) and (viii) below.) This problem does not occur with affine varieties.)

By a *variety* we shall mean an affine, quasi-affine, projective, or quasi-projective variety.

(iii) Let V be the closed subset of $\mathbb{P}^r(K)$ given by $V = V_{\mathbb{P}^r(K)}(\mathfrak{a})$, where $\mathfrak{a}$ is a proper graded ideal of $K[X_0, \ldots, X_r]$. The *affine cone* $\mathrm{Cone}(V) \subseteq \mathbb{A}^{r+1}(K)$ *over* V *in* $\mathbb{A}^{r+1}(K)$ is defined by

$$\begin{aligned}\mathrm{Cone}(V) &= \left\{(c_0, \ldots, c_r) \in \mathbb{A}^{r+1}(K) \setminus \{0\} : (c_0 : \cdots : c_r) \in V\right\} \cup \{0\} \\ &= V_{\mathbb{A}^{r+1}(K)}(\mathfrak{a}),\end{aligned}$$

an affine algebraic cone in $\mathbb{A}^{r+1}(K)$.

On the other hand, for the affine algebraic cone C in $\mathbb{A}^{r+1}(K)$ defined by $C = V_{\mathbb{A}^{r+1}(K)}(\mathfrak{a}')$, where $\mathfrak{a}'$ is a proper graded ideal of $K[X_0, \ldots, X_r]$, we define the *projectivization* C^+ *of* C to be the closed subset

$$C^+ = \{(c_0 : \cdots : c_r) \in \mathbb{P}^r(K) : (c_0, \ldots, c_r) \in C \setminus \{0\}\} = V_{\mathbb{P}^r(K)}(\mathfrak{a}')$$

of $\mathbb{P}^r(K)$. Thus $V \mapsto \mathrm{Cone}(V)$ provides a bijective map from the set $T := \{V \subseteq \mathbb{P}^r(K) : V \text{ is closed}\}$ of all closed subsets of $\mathbb{P}^r(K)$ to the set

$$\left\{C \subseteq \mathbb{A}^{r+1}(K) : C \text{ is an affine algebraic cone}\right\}$$

of all affine algebraic cones in $\mathbb{A}^{r+1}(K)$; the inverse map is given by $C \mapsto C^+$. Note that these two maps both preserve inclusion relations.

(iv) It follows from part (iii) and standard facts from affine algebraic geometry that there is a bijective correspondence between the set T of all closed subsets of $\mathbb{P}^r(K)$ and the set of all radical proper graded ideals of $K[X_0, \ldots, X_r]$ under which a closed subset $V \in T$ corresponds to

$$\begin{aligned}I_{\mathbb{A}^{r+1}(K)}(\mathrm{Cone}(V)) &= \{f \in K[X_0, \ldots, X_r] : f(c_0, \ldots, c_r) = 0 \text{ for all} \\ &\qquad\qquad (c_0, \ldots, c_r) \in \mathrm{Cone}(V)\} \\ &= \{f \in K[X_0, \ldots, X_r]_+ : f(c_0, \ldots, c_r) = 0 \text{ for all} \\ &\qquad\qquad (c_0, \ldots, c_r) \in \mathbb{A}^{r+1}(K) \setminus \{0\} \\ &\qquad\qquad \text{with } (c_0 : \cdots : c_r) \in V\}.\end{aligned}$$

This is also denoted by $I_{\mathbb{P}^r(K)}(V)$, and is called the *vanishing ideal of* V.

(v) Note that, if $V_1, \ldots, V_t$ are closed subsets in $\mathbb{P}^r(K)$, then

$$\mathrm{Cone}\left(\bigcup_{i=1}^t V_i\right) = \bigcup_{i=1}^t \mathrm{Cone}(V_i) \quad \text{and} \quad \mathrm{Cone}\left(\bigcap_{i=1}^t V_i\right) = \bigcap_{i=1}^t \mathrm{Cone}(V_i).$$

Also, the minimal prime ideals of a proper graded ideal of $K[X_0, \ldots, X_r]$ are again graded (by [6, 1.5.6(b)(ii)]), and so it follows that a closed subset V of $\mathbb{P}^r(K)$ is irreducible if and only if $\mathrm{Cone}(V)$ is irreducible and non-degenerate, and that this is the case if and only if $I_{\mathbb{A}^{r+1}(K)}(\mathrm{Cone}(V))$ is a graded prime ideal of $K[X_0, \ldots, X_r]$ properly contained in $(X_0, \ldots, X_r)$.

Thus, in the bijective correspondence of part (iv), the projective varieties in $\mathbb{P}^r(K)$ correspond to the graded prime ideals of $K[X_0,\ldots,X_r]$ properly contained in $(X_0,\ldots,X_r)$.

(vi) Let $V \subseteq \mathbb{P}^r(K)$ be a projective variety. By parts (iv) and (v), the ideal $\mathfrak{p} := I_{\mathbb{A}^{r+1}(K)}(\mathrm{Cone}(V))$ is a graded prime ideal of $K[X_0,\ldots,X_r]$ with $\mathfrak{p} \subset (X_0,\ldots,X_r)$. We refer to the positively graded *local ring

$$\mathcal{O}(\mathrm{Cone}(V)) = K[X_0,\ldots,X_r]/\mathfrak{p} = K[X_0,\ldots,X_r]/I_{\mathbb{A}^{r+1}(K)}(\mathrm{Cone}(V))$$

as the *homogeneous coordinate ring of* $V \subseteq \mathbb{P}^r(K)$.

(vii) Remember that the *dimension* $\dim V$ of a variety V is defined as the maximum length l of a strictly descending chain $C_0 \supset C_1 \supset \ldots \supset C_l$ of closed irreducible subsets of V, and that such a V is called a *curve* if and only if $\dim V = 1$ and a *surface* if and only if $\dim V = 2$. Using the correspondence described in part (iii) and the observation made in part (v), we obtain, for a projective variety $V' \subseteq \mathbb{P}^r(K)$, that

$$\dim V' = \dim(\mathrm{Cone}(V')) - 1 = \dim(\mathcal{O}(\mathrm{Cone}(V'))) - 1.$$

(viii) We mentioned in (ii) above that isomorphic projective varieties, embedded in projective spaces in different ways, can have non-isomorphic homogeneous coordinate rings. Properties of the homogeneous coordinate ring $\mathcal{O}(\mathrm{Cone}(V))$ of a projective variety $V \subseteq \mathbb{P}^r(K)$ are referred to as *arithmetic properties of* V. *For example, we say that* $V \subseteq \mathbb{P}^r(K)$ *is arithmetically Cohen-Macaulay (respectively arithmetically Gorenstein, ...)* if and only if $\mathcal{O}(\mathrm{Cone}(V))$ is a Cohen-Macaulay (respectively Gorenstein, ...) ring. We also define the *arithmetic depth* $\mathrm{arithdepth}\, V$ *of* V to be the grade of the unique *maximal graded ideal of the homogeneous coordinate ring of V. Thus $\mathrm{arithdepth}\, V = \mathrm{grade}\, \mathcal{O}(\mathrm{Cone}(V))_+$.

14.2.2 Reminder and ♯Exercise: Veronesean transformations. Let K be an algebraically closed field, and let $r, d \in \mathbb{N}$. Let $V \subseteq \mathbb{P}^r(K)$ be a projective variety, and let $\mathfrak{p}$ denote (the graded prime) kernel $I_{\mathbb{P}^r(K)}(V)$ of the restriction homomorphism $K[X_0,\ldots,X_r] \longrightarrow \mathcal{O}(\mathrm{Cone}(V))$. Set

$$\mathcal{T} = \mathcal{T}_r^{(d)} = \left\{(v_0,\ldots,v_r) \in \mathbb{N}_0^{r+1} : v_0 + \ldots + v_r = d\right\},$$

a set with cardinality $\binom{r+d}{r}$. We shall use a family of (algebraically independent) indeterminates $(Y_v)_{v\in\mathcal{T}}$ indexed by $\mathcal{T}$. Let

$$\phi : K[Y_v : v \in \mathcal{T}] \longrightarrow K[X_0,\ldots,X_r]$$

be the K-algebra homomorphism for which $\phi(Y_{(v_0,\ldots,v_r)}) = X_0^{v_0}\ldots X_r^{v_r}$ for all $(v_0,\ldots,v_r) \in \mathscr{T}$. Let θ be the composition

$$K[Y_v : v \in \mathscr{T}] \xrightarrow{\phi} K[X_0,\ldots,X_r] \xrightarrow{\lceil \mathrm{Cone}(V)} \mathscr{O}(\mathrm{Cone}(V)),$$

and let $\mathfrak{q} := \mathrm{Ker}\,\theta$, a graded prime ideal of $K[Y_v : v \in \mathscr{T}]$.

(i) Show that, with the notation of 12.4.6, $\mathrm{Im}\,\phi = K[X_0,\ldots,X_r]^{(d)}$, the d-th Veronesean subring of $K[X_0,\ldots,X_r]$, that $\phi(\mathfrak{q}) = \mathfrak{p}^{(d)}$, and that $\mathrm{Im}\,\theta = \mathscr{O}(\mathrm{Cone}(V))^{(d)}$.

Note that, when Veronesean subrings are given the grading described at the beginning of 12.4.6, both $\phi : K[Y_v : v \in \mathscr{T}] \longrightarrow K[X_0,\ldots,X_r]^{(d)}$ and

$$\theta : K[Y_v : v \in \mathscr{T}] \longrightarrow \mathscr{O}(\mathrm{Cone}(V))^{(d)}$$

are homogeneous ring homomorphisms.

If we consider $K[Y_v : v \in \mathscr{T}]$ as $\mathscr{O}\left(\mathbb{A}^{\binom{r+d}{r}}(K)\right)$, then the graded prime ideal $\mathfrak{q}$ of this polynomial ring defines a projective variety

$$V^{(d)} := V_{\mathbb{P}^{\binom{r+d}{r}-1}(K)}(\mathfrak{q}) \subseteq \mathbb{P}^{\binom{r+d}{r}-1}(K),$$

called the *d-th Veronesean of* V. Note that there is a homogeneous isomorphism of graded K-algebras $\mathscr{O}(\mathrm{Cone}(V^{(d)})) \xrightarrow{\cong} \mathscr{O}(\mathrm{Cone}(V))^{(d)}$.

The main aim of this exercise is to show that the varieties V and $V^{(d)}$ are isomorphic. Some additional notation will be helpful. Given an element $\beta = (\beta_v)_{v\in\mathscr{T}} \in \mathbb{A}^{\binom{r+d}{r}}(K) \setminus \{0\}$, we use $\overline{\beta} = \overline{(\beta_v)_{v\in\mathscr{T}}}$ to denote the line $\{\lambda\beta : \lambda \in K\}$, considered as an element of $\mathbb{P}^{\binom{r+d}{r}-1}(K)$. Also, if $y = (y_0,\ldots,y_r)$ is an $(r+1)$-tuple of elements of some commutative K-algebra and $v = (v_0,\ldots,v_r) \in \mathbb{N}_0{}^{r+1}$, then we shall use y^v to denote $y_0^{v_0}\ldots y_r^{v_r}$. For each $i = 0,\ldots,r$, let $e_i = (0,\ldots,0,1,0,\ldots,0)$ be the element of $\mathbb{N}_0{}^{r+1}$ whose only non-zero component is a '1' in the i-th position. In order to simplify notation, we shall also employ the $\mathbb{Z}$-module structure on $\mathbb{Z}^{r+1}$. For example, with this notation, we can write that $de_i \in \mathscr{T}$ for all $i = 0,\ldots,r$.

(ii) Let $s \in \mathbb{N}$ and let $\omega^{(1)},\ldots,\omega^{(s)},\mu^{(1)},\ldots,\mu^{(s)} \in \mathscr{T}$ be such that $\sum_{i=1}^s \omega^{(i)} = \sum_{i=1}^s \mu^{(i)}$. Show that $Y_{\omega^{(1)}}\ldots Y_{\omega^{(s)}} - Y_{\mu^{(1)}}\ldots Y_{\mu^{(s)}} \in \mathfrak{q}$.

(iii) Let $v = (v_0,\ldots,v_r) \in \mathscr{T}$. Deduce from part (ii) that, for all $i,j,k \in \{0,\ldots,r\}$, we have

(a) $Y_{e_k+(d-1)e_i}Y_{e_i+(d-1)e_j} - Y_{de_i}Y_{e_k+(d-1)e_j} \in \mathfrak{q}$;
(b) $\prod_{\alpha=0}^r (Y_{e_\alpha+(d-1)e_i})^{v_\alpha} - Y_v(Y_{de_i})^{d-1} \in \mathfrak{q}$; and
(c) $Y_v^d - \prod_{\alpha=0}^r (Y_{de_\alpha})^{v_\alpha} \in \mathfrak{q}$.

(iv) Show that there is a morphism of varieties $\vartheta^{(d)} : V \longrightarrow V^{(d)}$ which is such that

$$\vartheta^{(d)}((\alpha_0 : \cdots : \alpha_r)) = \overline{(\alpha^\nu)_{\nu\in\mathscr{T}}} \qquad \text{for all } \alpha = (\alpha_0 : \cdots : \alpha_r) \in V.$$

(v) For $i = 0, \ldots, r$, let $U_i := V^{(d)} \setminus V_{\mathbb{P}^{\binom{r+d}{r}-1}(K)}(Y_{de_i})$. Use part (iii)(c) to show that $U_0, \ldots, U_r$ form an open covering of $V^{(d)}$.

(vi) Show that there is a morphism of varieties $\omega : V^{(d)} \longrightarrow \mathbb{P}^r(K)$ which is such that, for each $i = 0, \ldots, r$ and for all $\overline{(\beta_\nu)_{\nu\in\mathscr{T}}} \in U_i$,

$$\omega(\overline{(\beta_\nu)_{\nu\in\mathscr{T}}}) = (\beta_{e_0+(d-1)e_i} : \cdots : \beta_{e_j+(d-1)e_i} : \cdots : \beta_{e_r+(d-1)e_i}).$$

(vii) Show that $\operatorname{Im}\omega \subseteq V$. (Here are some hints. Suppose that $i \in \{0, \ldots, r\}$ and $\overline{(\beta_\nu)_{\nu\in\mathscr{T}}} \in U_i$. Let $\alpha := (\beta_{e_0+(d-1)e_i}, \ldots, \beta_{e_r+(d-1)e_i})$. It is enough to show that, for each homogeneous $g \in \mathfrak{p}$, we have $g^d(\alpha) = 0$ (as this would imply that $g(\alpha) = 0$). Now $g^d \in \mathfrak{p}^{(d)}$; by part (i), we have $\mathfrak{p}^{(d)} = \phi(\mathfrak{q})$, and so there exists a homogeneous $f \in \mathfrak{q}$ such that $\phi(f) = g^d$. Now use part (iii)(b).)

(viii) Show that $\omega : V^{(d)} \longrightarrow V$ and $\vartheta^{(d)} : V \longrightarrow V^{(d)}$ are inverse isomorphisms of varieties. The isomorphism $\vartheta^{(d)}$ is called the *d-th Veronesean transformation of* V or the *d-th Veronesean map on* V.

14.2.3 Example: rational normal curves. Consider the special case of 14.2.2 in which $r = 1$, $V = \mathbb{P}^1(K)$, but d is still arbitrary. The d-th Veronesean $\mathbb{P}^1(K)^{(d)}$ of $\mathbb{P}^1(K)$ has the property that there is a homogeneous isomorphism

$$\begin{aligned}\mathscr{C}(\mathbb{P}^1(K)^{(d)}) &\cong \mathscr{C}(\mathbb{P}^1(K))^{(d)} = K[X_0, X_1]^{(d)} \\ &= K[X_0^d, X_0^{d-1}X_1, \ldots, X_0X_1^{d-1}, X_1^d] \subseteq K[X_0, X_1].\end{aligned}$$

The Veronesean transformation $\vartheta^{(d)} : \mathbb{P}^1(K) \longrightarrow \mathbb{P}^1(K)^{(d)}$ is an isomorphism of varieties, given by

$$\vartheta^{(d)}((\sigma : \tau)) = (\sigma^d : \sigma^{d-1}\tau : \cdots : \sigma\tau^{d-1} : \tau^d) \qquad \text{for all } (\sigma : \tau) \in \mathbb{P}^1(K).$$

Thus $\mathbb{P}^1(K)^{(d)} \subseteq \mathbb{P}^d(K)$ is a curve which is isomorphic to the projective line $\mathbb{P}^1(K)$; it is called the *rational normal curve in projective d-space*, and we shall denote it by $N_{(d)} \subseteq \mathbb{P}^d(K)$. The curve $N_{(3)} \subseteq \mathbb{P}^3(K)$ is also called the *twisted cubic*.

The phenomenon mentioned in 14.2.1(ii),(viii) is illustrated by these rational normal curves: it follows from 13.4.10 that, provided $d \geq 3$, the rational normal curve $N_{(d)} \subseteq \mathbb{P}^d(K)$ is not arithmetically Gorenstein, whereas $\mathbb{P}^1(K)$, to which it is isomorphic, is.

14.2.4 Proposition. *Let K be an algebraically closed field, and let $r, d \in \mathbb{N}$. Let $V \subseteq \mathbb{P}^r(K)$ be a projective variety of positive dimension, and consider the d-th Veronesean $V^{(d)} \subseteq \mathbb{P}^{\binom{r-d}{r}-1}(K)$ of V. Set*

$$e := \operatorname{end}(H^1_{\mathcal{O}(\mathrm{Cone}(V))_+}(\mathcal{O}(\mathrm{Cone}(V)))).$$

Then

$$\operatorname{arithdepth} V^{(d)} \begin{cases} > 1 & \text{if } d > e, \\ = 1 & \text{if } d = e. \end{cases}$$

In particular, if the projective variety $V \subseteq \mathbb{P}^r(K)$ is a curve, then $V^{(d)}$ is arithmetically Cohen-Macaulay if $d > e$, and is not arithmetically Cohen-Macaulay if $d = e$.

Proof. Let $R := \mathcal{O}(\mathrm{Cone}(V))$. By 14.1.4(ii),(iv), we have $e < \infty$ and $H^1_{R_+}(R)_n = 0$ for all $n \leq 0$. Hence the $(d, 0)$-th Veronesean submodule $H^1_{R_+}(R)^{(d,0)}$ of $H^1_{R_+}(R)$ (see 12.4.6) is zero if $d > e$ and is non-zero if $d = e$. But, by 12.4.6(v), there is a homogeneous $R^{(d)}$-isomorphism $H^1_{R_+}(R)^{(d,0)} \xrightarrow{\cong} H^1_{(R_+)^{(d)}}(R^{(d)})$; furthermore, $(R_+)^{(d)} = (R^{(d)})_+$. Note also that $H^0_{(R^{(d)})_+}(R^{(d)}) = 0$ since $R^{(d)}$ is a domain and $R^{(d)}_+ \neq 0$. Since there is a homogeneous ring isomorphism $\mathcal{O}(\mathrm{Cone}(V^{(d)})) \xrightarrow{\cong} R^{(d)}$ by 14.2.2, it follows that arithdepth $V^{(d)} > 1$ if $d > e$ and arithdepth $V^{(d)} = 1$ if $d = e$.

If V is a curve, then $\dim R = 2$, so that, since R is an integral extension domain of $R^{(d)}$, it follows that the *local graded ring $\mathcal{O}(\mathrm{Cone}(V^{(d)}))$ is Cohen-Macaulay if and only if arithdepth $V^{(d)} > 1$. □

14.2.5 ♯Exercise. Let K be an algebraically closed field, let $d \in \mathbb{N}$ with $d \geq 3$, and let $A_{(d)}$ be the subring of the ring $K[X, Y]$ of polynomials over K in two indeterminates X and Y described in 12.4.7 and given by $A_{(d)} := K[X^d, X^{d-1}Y, XY^{d-1}, Y^d]$. Recall that $A_{(d)}$ inherits a grading from $K[X, Y]^{(d)}$, the d-th Veronesean subring of $K[X, Y]$.

Consider the polynomial ring $K[Y_0, Y_1, Y_2, Y_3]$ in four indeterminates Y_0, Y_1, Y_2, Y_3 as the coordinate ring $\mathcal{O}(\mathbb{A}^4(K))$. Let $\psi : K[Y_0, Y_1, Y_2, Y_3] \longrightarrow A_{(d)}$ be the (surjective, homogeneous) K-algebra homomorphism for which $\psi(Y_0) = X^d$, $\psi(Y_1) = X^{d-1}Y$, $\psi(Y_2) = XY^{d-1}$ and $\psi(Y_3) = Y^d$. Let $\mathfrak{p} := \operatorname{Ker}\psi$; this is a graded prime ideal of $K[Y_0, Y_1, Y_2, Y_3]$ and so defines a projective variety $\Sigma_{(d)} := V_{\mathbb{P}^3(K)}(\mathfrak{p}) \subseteq \mathbb{P}^3(K)$.

(i) Show that there is a morphism $\rho : \mathbb{P}^1(K) \longrightarrow \Sigma_{(d)}$ of varieties for which $\rho((\sigma : \tau)) = (\sigma^d : \sigma^{d-1}\tau : \sigma\tau^{d-1} : \tau^d)$ for all $(\sigma : \tau) \in \mathbb{P}^1(K)$.

(ii) Show that $Y_2^d - Y_3^{d-1}Y_0 \in \mathfrak{p}$.

(iii) Set $U := \Sigma_{(d)} \setminus V_{\mathbb{P}^3(K)}((Y_0))$ and $U' := \Sigma_{(d)} \setminus V_{\mathbb{P}^3(K)}((Y_3))$. Show that U and U' form an open covering of $\Sigma_{(d)}$.

(iv) Show that there is a morphism $\mu : \Sigma_{(d)} \longrightarrow \mathbb{P}^1(K)$ of varieties for which

$$\mu((\alpha : \beta : \gamma : \delta)) = \begin{cases} (\alpha : \beta) & \text{if} \quad (\alpha : \beta : \gamma : \delta) \in U, \\ (\gamma : \delta) & \text{if} \quad (\alpha : \beta : \gamma : \delta) \in U'. \end{cases}$$

(v) Show that ρ and μ are inverse isomorphisms of varieties, so that $\Sigma_{(d)}$ is again a curve isomorphic to $\mathbb{P}^1(K)$.

(vi) Let $t \in \mathbb{N}$. Use 12.4.7 to show that, when $d > 3$, the curve $\Sigma_{(d)} \subseteq \mathbb{P}^3(K)$ is not arithmetically Cohen-Macaulay, but that the t-th Veronesean $(\Sigma_{(d)})^{(t)} \subseteq \mathbb{P}^{\binom{t+3}{3}-1}(K)$ is arithmetically Cohen-Macaulay provided that $t \geq d-2$. Is $(\Sigma_{(d)})^{(d-3)} \subseteq \mathbb{P}^{\binom{d}{3}-1}(K)$ arithmetically Cohen-Macaulay?

14.2.6 Remarks. Let the situation and notation be as in Exercise 14.2.5, where the curve $\Sigma_{(d)} \subseteq \mathbb{P}^3(K)$ was constructed, for each integer $d \geq 3$. As a variety, $\Sigma_{(d)}$ is isomorphic to the projective line $\mathbb{P}^1(K)$. Note that $\Sigma_{(3)} \subseteq \mathbb{P}^3(K)$ is just the twisted cubic $N_{(3)} \subseteq \mathbb{P}^3(K)$ of 14.2.3. The curve $\Sigma_{(4)} \subseteq \mathbb{P}^3(K)$ is called the *twisted quartic* or *Macaulay's curve*.

Exercise 14.2.5(vi) shows that the arithmetic structure of $\Sigma_{(d)} \subseteq \mathbb{P}^3(K)$, which reflects the way in which the curve is embedded in $\mathbb{P}^3(K)$, is more complicated for $d > 3$ then it is when $d = 3$. This is another illustration of the phenomenon mentioned in 14.2.1(ii),(viii).

In the next Chapter 15, we shall consider the situation where $R = \bigoplus_{n \in \mathbb{N}_0} R_n$ is positively graded; we shall study in considerable depth the components $H^i_{R_+}(M)_n$ $(n \in \mathbb{Z})$ of the i-th $(i \in \mathbb{N}_0)$ local cohomology module, with respect to the irrelevant ideal R_+ of R, of a finitely generated graded R-module M. There is very strong motivation from projective algebraic geometry for such study, and we hope that our discussions of projective varieties in this chapter have given the reader some hints of this motivation.

15

Castelnuovo regularity

In Chapter 14, we have seen that, when (K is an algebraically closed field, $r \in \mathbb{N}$ and) R is the homogeneous coordinate ring of a projective variety $V \subseteq \mathbb{P}^r(K)$ of positive dimension, the end of the (necessarily graded) first local cohomology module $H^1_{R_+}(R)$ is of interest: see 14.2.4. This is one motivation for our work in this chapter, where we shall study, in the case when $R = \bigoplus_{n \in \mathbb{N}_0} R_n$ is positively graded, the ends of the local cohomology modules $H^i_{R_+}(M)$ for a finitely generated graded R-module M. Perhaps the most important invariant related to these ends is the so-called (Castelnuovo-Mumford) regularity of M. This invariant is of great significance in algebraic geometry, and, as we shall see in 15.3.7 and 15.3.8, it provides links between local cohomology theory and the syzygies of finitely generated graded modules over a polynomial ring over a field.

15.1 Finitely generated components

Our first goal in this chapter is to establish the basic fact that, in the notation of the above introduction, for each $i \in \mathbb{N}_0$, the R_0-module $H^i_{R_+}(M)_n$ is finitely generated for all $n \in \mathbb{Z}$ and zero for all sufficiently large n. This fact, which generalizes 14.1.4(iii),(ii), is the basis for much of the work in this and the next two chapters. We begin by introducing further convenient notation and terminology.

15.1.1 Notation and Terminology. We shall employ the notation and terminology concerning graded rings and modules described in 12.1.1, 13.1.1 and 14.1.1.

Recall [6, p. 28] that, when $R = \bigoplus_{n \in \mathbb{N}_0} R_n$ is positively graded, we say that R is *homogeneous* if and only if R is generated as an R_0-algebra by its forms of degree 1, that is, if and only if $R = R_0[R_1]$.

Also, when R is merely positively graded, $L = \bigoplus_{n\in\mathbb{Z}} L_n$ is a graded R-module and $t \in \mathbb{Z}$ is fixed, we write

$$L_{\geq t} := \bigoplus_{\substack{n\in\mathbb{Z}\\ n\geq t}} L_n,$$

a graded submodule of L. For example, in 15.1.6 below, we shall be concerned with the graded R-modules $D_{R_+}(M)_{\geq t}$ (for a graded R-module M).

We shall need to use the following graded version of the Prime Avoidance Theorem; for a proof, we refer the reader to [6].

15.1.2 Homogeneous Prime Avoidance Lemma. (See [6, 1.5.10].) *Assume that R is graded and that the ideal $\mathfrak{a}$ is graded and generated by elements of positive degree. Let $\mathfrak{p}_1, \ldots, \mathfrak{p}_n \in \operatorname{Spec}(R)$ be such that, for all $i = 1, \ldots, n$, we have $\mathfrak{a} \not\subseteq$ [illegible] Then there exists a homogeneous element in $\mathfrak{a} \setminus (\mathfrak{p}_1 \cup \ldots \cup \mathfrak{p}_n)$.* □

We can improve on the result of 15.1.2 when R_0 is local with infinite residue field and $\mathfrak{a}$ is generated by elements of degree 1.

15.1.3 Lemma. (See [6, 1.5.12].) *Assume that $R = \bigoplus_{n\in\mathbb{Z}} R_n$ is graded, that R_0 is local with infinite residue field, and that the ideal $\mathfrak{a}$ is graded and generated by elements of degree 1. Let $\mathfrak{b}_1, \ldots, \mathfrak{b}_n$ be ideals of R such that, for all $i =$ [illegible] $1, \ldots, n$, we have $\mathfrak{a} \not\subseteq \mathfrak{b}_i$. Then there exists a homogeneous element of degree* [illegible] $\mathfrak{a} \setminus (\mathfrak{b}_1 \cup \ldots \cup \mathfrak{b}_n)$.

Proof. Set $\mathfrak{a}_1 := \mathfrak{a} \cap R_1$, and let $\mathfrak{m}_0$ denote the maximal ideal of R_0. The hypotheses ensure that, for all $i = 1, \ldots, n$,

$$(\mathfrak{b}_i \cap \mathfrak{a}_1 + \mathfrak{m}_0\mathfrak{a}_1)/\mathfrak{m}_0\mathfrak{a}_1 \neq \mathfrak{a}_1/\mathfrak{m}_0\mathfrak{a}_1.$$

Since $R_0/\mathfrak{m}_0$ is infinite, there exists $r_1 \in \mathfrak{a}_1 \setminus \bigcup_{i=1}^{n}(\mathfrak{b}_i \cap \mathfrak{a}_1 + \mathfrak{m}_0\mathfrak{a}_1)$. □

15.1.4 Lemma. *Assume that $R = \bigoplus_{n\in\mathbb{Z}} R_n$ is graded and that the ideal* [illegible] *and generated by elements of positive degree. Let M be a finitely* [illegible] *module such that $\mathfrak{a}M \neq M$ and $\operatorname{grade}_M \mathfrak{a} > 0$.*

(i) *There exists a homogeneous element in $\mathfrak{a}$ which is a non-zero* [illegible]

(ii) *If, in addition, R_0 is local with infinite residue field and $\mathfrak{a}$* [illegible] *elements of degree 1, then there exists a homogeneous element* [illegible] *1 in $\mathfrak{a}$ which is a non-zerodivisor on M.*

Proof. Since $\mathfrak{a} \not\subseteq \bigcup_{\mathfrak{p}\in\operatorname{Ass} M} \mathfrak{p}$, part (i) is immediate from 15.1.2. [illegible] follows from 15.1.3. □

We are now ready to prove the basic finiteness and vanishing theorem which was mentioned in the first paragraph of this section.

15.1.5 Proposition. *Assume that $R = \bigoplus_{n\in\mathbb{N}_0} R_n$ is positively graded; let M be a finitely generated graded R-module.*

(i) *For all $i \in \mathbb{N}_0$ and all $n \in \mathbb{Z}$, the R_0-module $H^i_{R_+}(M)_n$ is finitely generated.*
(ii) *There exists $r \in \mathbb{Z}$ such that $H^i_{R_-}(M)_n = 0$ for all $i \in \mathbb{N}_0$ and all $n \geq r$.*

Proof. Let $i \in \mathbb{N}_0$. We prove, by induction on i, that $H^i_{R_+}(M)_n$ is a finitely generated R_0-module for all $n \in \mathbb{Z}$, and is zero for all sufficiently large values of n. This will prove not only part (i) but also part (ii), because, in view of 3.3.3, there can only be finitely many integers i for which $H^i_{R_+}(M) \neq 0$, since $H^i_{R_+}(M) = 0$ for all $i > \operatorname{ara}(R_+)$.

We consider first the case where $i = 0$. Since $H^0_{R_-}(M)$ is a submodule of M, it is finitely generated as R-module, and so there exists $u \in \mathbb{N}$ such that $(R_+)^u H^0_{R_-}(M) = 0$. Now $(R_+)^i H^0_{R_+}(M)/(R_+)^{i+1} H^0_{R_+}(M)$ is a Noetherian R/R_+-module, and so is a Noetherian R_0-module (for each $i = 0, \ldots, u-1$). Therefore $H^0_{R_+}(M)$ is a Noetherian R_0-module. Hence $H^0_{R_-}(M)_n$ is a finitely generated R_0-module for all $n \in \mathbb{Z}$, and only finitely many of the $H^0_{R_-}(M)_n$ can be non-zero.

Now suppose that $i > 0$ and our desired result has been proved for smaller values of i (and for all choices of the finitely generated graded R-module M). Since $\Gamma_{R_-}(M)$ is a graded submodule of M, it follows from 2.1.7(iii) that, for all $i \in \mathbb{N}$, there is a (homogeneous) isomorphism $H^i_{R_-}(M) \cong H^i_{R_+}(M/\Gamma_{R_+}(M))$. Thus, for the purpose of this inductive step, we can replace M by $M/\Gamma_{R_+}(M)$ and so (in view of 2.1.2 and 2.1.1) assume that R_+ contains a non-zerodivisor on M. This we do.

We can assume that $M \neq 0$; we therefore assume that $M \neq R_+M$. Then, by Lemma 15.1.4, there exists a homogeneous element $r \in R_+$ which is a non-zerodivisor on M. Let t denote the degree of r.

The exact sequence $0 \longrightarrow M \xrightarrow{r} M(t) \longrightarrow (M/rM)(t) \longrightarrow 0$ of graded R-modules and homogeneous homomorphisms induces a long exact sequence (in $^*\mathscr{C}(R)$) of local cohomology modules, from which we deduce (with the aid of 13.1.9(ii)) an exact sequence

$$H^{i-1}_{R_+}(M/rM)_{n+t} \longrightarrow H^i_{R_-}(M)_n \xrightarrow{r} H^i_{R_+}(M)_{n+t}$$

of R_0-modules for all $n \in \mathbb{Z}$.

By the inductive hypothesis, there exists $s \in \mathbb{Z}$ such that

$$H^{i-1}_{R_+}(M/rM)_j = 0 \qquad \text{for all } j \geq s.$$

Hence, for all $n \geq s-t$, the sequence $0 \longrightarrow H^i_{R_+}(M)_n \xrightarrow{r} H^i_{R_+}(M)_{n+t}$ is exact; therefore, since $H^i_{R_+}(M)$ is R_+-torsion and $r \in R_+$, we have $H^i_{R_+}(M)_n = 0$ for all $n \geq s-t$.

It also follows from the inductive hypothesis that $H^{i-1}_{R_+}(M/rM)_j$ is a finitely generated R_0-module for all $j \in \mathbb{Z}$. Fix $n \in \mathbb{Z}$ and let $k \in \mathbb{N}_0$ be such that $n+kt \geq s-t$, so that $H^i_{R_+}(M)_{n+kt} = 0$ by the last paragraph. Now, for each $j = 0, \ldots, k-1$, there is an exact sequence

$$H^{i-1}_{R_+}(M/rM)_{n+(j+1)t} \longrightarrow H^i_{R_+}(M)_{n+jt} \xrightarrow{r} H^i_{R_+}(M)_{n+(j+1)t}$$

of R_0-modules, and $H^{i-1}_{R_+}(M/rM)_{n+(j+1)t}$ is finitely generated over R_0. We can therefore deduce, successively, that $H^i_{R_+}(M)_{n+jt}$ is finitely generated over R_0 for $j = k-1, k-2, \ldots, 1, 0$; we thus conclude that $H^i_{R_+}(M)_n$ is finitely generated over R_0, and the inductive step is complete. □

15.1.6 Corollary. *Assume that $R = \bigoplus_{n \in \mathbb{N}_0} R_n$ is positively graded; let $M = \bigoplus_{n \in \mathbb{Z}} M_n$ be a finitely generated graded R-module. Then (with the notation of* 15.1.1*)*

(i) *$D_{R_-}(M)_{\geq t}$ is a finitely generated R-module for all $t \in \mathbb{Z}$;*
(ii) *$D_{R_+}(M)_n$ is a finitely generated R_0-module for all $n \in \mathbb{Z}$; and*
(iii) *for all sufficiently large n, the restriction to M_n of the map $\eta_M : M \longrightarrow D_{R_+}(M)$ of* 2.2.4(i)(c) *provides an R_0-isomorphism*

$$(\eta_M)_n : M_n \longrightarrow D_{R_+}(M)_n.$$

Proof. These claims are all immediate consequences of Proposition 15.1.5 and the exact sequence

$$0 \longrightarrow \Gamma_{R_+}(M) \xrightarrow{\xi_M} M \xrightarrow{\eta_M} D_{R_+}(M) \xrightarrow{\zeta_M} H^1_{R_+}(M) \longrightarrow 0$$

of graded R-modules and homogeneous homomorphisms: see 12.4.2. □

Proposition 15.1.5 shows that, when R is positively graded, the theory of local cohomology with respect to the irrelevant ideal of R is particularly satisfactory. It is natural to ask whether local cohomology with respect to other homogeneous ideals exhibits similar properties. The next three exercises concern examples where the answer is clearly negative: the conclusions of these exercises should be compared with those of Proposition 15.1.5.

15.1.7 Exercise. Let $(R_0, \pi R_0)$ be a discrete valuation ring, and let R denote the polynomial ring $R_0[X]$, regarded as a graded ring in the usual way. Let $\mathfrak{m} := \pi R + XR$, the unique maximal graded ideal of R. Let M be a non-zero, torsion-free, finitely generated, graded R-module.

(i) Use the Graded Finiteness Theorem 13.1.17 to show that $H^1_{\mathfrak{m}}(M)$ is finitely generated.

(ii) Show that $H^2_{\mathfrak{m}}(M/XM) = 0$.

(iii) Use 12.4.3 to see that there exists $n_0 \in \mathbb{Z}$ for which $H^1_{\mathfrak{m}}(M/XM)_{n_0}$ is not finitely generated as R_0-module.

(iv) Use the exact sequence $0 \longrightarrow M \xrightarrow{X} M(1) \longrightarrow (M/XM)(1) \longrightarrow 0$ to show that there exists $n_1 \in \mathbb{Z}$ such that $H^2_{\mathfrak{m}}(M)_n$ is not finitely generated for all $n < n_1$ and there exists $n_2 \in \mathbb{Z}$ such that $H^2_{\mathfrak{m}}(M)_n = 0$ for all $n > n_2$.

15.1.8 Exercise. Let R_0 be a commutative Noetherian ring, and let R denote the polynomial ring $R_0[X, Y]$, graded in the usual way (by total degree of polynomials). Use Exercise 12.4.3 to show that, for all $n \in \mathbb{Z}$, the R_0-module $H^1_{XR}(R)_n$ is free but not finitely generated.

Compare this with the conclusions of Proposition 15.1.5.

15.1.9 Exercise. Let $(R_0, \pi R_0)$ be a discrete valuation ring as in Exercise 15.1.7, and let R denote the graded ring $R_0[X, Y]$, as in Exercise 15.1.8. Let $\mathfrak{a} := \pi R + XR$. Use 15.1.8 and 13.1.12 to show that, for all $n \in \mathbb{Z}$, the R_0-module $H^2_{\mathfrak{a}}(R)_n$ is not finitely generated.

15.1.10 ♯Exercise. Assume that $R = \bigoplus_{n \in \mathbb{N}_0} R_n$ is positively graded and such that $(R_0, \mathfrak{m}_0)$ is local. Set $\mathfrak{m} = \mathfrak{m}_0 R + R_+$, the unique graded maximal ideal of R. Let M be a finitely generated graded R-module such that $d := \dim(M/\Gamma_{R_+}(M)) > 0$.

(i) Show that there is a homogeneous element a of positive degree t which is a non-zerodivisor on $\overline{M} := M/\Gamma_{R_+}(M)$.

(ii) Use Theorem 6.1.4 to show that $H^d_{\mathfrak{m}}(\overline{M}) \neq 0$, and part (i) to deduce that there are infinitely many negative $n \in \mathbb{Z}$ such that $H^d_{\mathfrak{m}}(\overline{M})_n \neq 0$.

(iii) Use 13.1.6 and 13.1.10 to show that, for each $i \in \mathbb{N}_0$, there are only finitely many integers $n \in \mathbb{Z}$ for which $H^i_{\mathfrak{m}}(\Gamma_{R_+}(M))_n \neq 0$.

(iv) Prove that there are infinitely many negative $n \in \mathbb{Z}$ such that $H^d_{\mathfrak{m}}(M)_n \neq 0$.

15.2 The basics of Castelnuovo regularity

Assume that R is positively graded and homogeneous, and let M be a finitely generated graded R-module. It is clear from 3.3.3 and 15.1.5 that there is an integer r such that, for all $s \in \mathbb{Z}$ with $s > r$, we have $H^i_{R_+}(M)_{s-i} = 0$ for all $i \in \mathbb{Z}$ (or, equivalently, for all $i \in \mathbb{N}_0$). The Castelnuovo regularity of M is the infimum of the set of integers r with this property (interpreted as $-\infty$ if this infimum does not exist). This is a very important invariant of M, and a topic

which has featured in much recent research. In this section, we develop the basic theory of this and some related, slightly more complicated, invariants.

15.2.1 Definitions. Assume that R is positively graded and homogeneous (see 15.1.1). Let M be a finitely generated graded R-module, and let $r \in \mathbb{Z}$ and $l \in \mathbb{N}_0$.

(i) We follow A. Ooishi in [46, Definition 1] and say that M is *r-regular in the sense of Castelnuovo-Mumford* if and only if $H^i_{R_+}(M)_{s-i} = 0$ for all $i, s \in \mathbb{Z}$ with $s > r$. In practice, the phrase 'in the sense of Castelnuovo-Mumford' is usually omitted.

As pointed out just before this definition, there does exist an $r \in \mathbb{Z}$ such that M is r-regular. Note that M is r-regular if and only if $H^i_{R_+}(M)_{s-i} = 0$ for all $i, s \in \mathbb{Z}$ with $s > r$ and $i \geq 0$. This observation leads to the following more general definition.

(ii) We say that M is *r-regular at and above level l* if and only if $H^i_{R_+}(M)_{s-i} = 0$ for all $i, s \in \mathbb{Z}$ with $s > r$ and $i \geq l$.

Thus M is r-regular if and only if it is r-regular at and above level 0.

Motivation for Definition 15.2.1 comes from Theorem 15.2.5 below, which is a version of a proposition of D. Mumford [38, p. 99], adapted to the context of local cohomology. (See also Ooishi [46, Theorem 2].) However, before presenting Theorem 15.2.5, we provide some technical comments which will help us to make appropriate reductions in the proof of the theorem and other results.

15.2.2 Remarks. Assume that $R = \bigoplus_{n \in \mathbb{Z}} R_n$ is graded, and that the ideal $\mathfrak{a}$ is graded. Let R'_0 be a commutative Noetherian ring, and let $f_0 : R_0 \longrightarrow R'_0$ be a flat ring homomorphism. Set $R' := R \otimes_{R_0} R'_0$, and let $f : R \longrightarrow R'$ be the natural ring homomorphism.

(i) Since R is a finitely generated R_0-algebra by [6, Theorem 1.5.5], it follows that R' is Noetherian. Furthermore, R' has the structure of a graded ring given by $R' = \bigoplus_{n \in \mathbb{Z}} R'_n$, where R'_n is the natural image of $R_n \otimes_{R_0} R'_0$ in R' for each $n \in \mathbb{N}$. Thus the ring homomorphism f is homogeneous (in the sense of 13.1.2), and flat.

(ii) It therefore follows from the Graded Flat Base Change Theorem 13.1.8 that the sequences

$$(H^i_{\mathfrak{a}}(\,\cdot\,) \otimes_R R')_{i \in \mathbb{N}_0} \qquad \text{and} \qquad (H^i_{\mathfrak{a}R'}((\,\cdot\,) \otimes_R R'))_{i \in \mathbb{N}_0}$$

(restricted to the 'graded' category $^*\mathscr{C}(R)$) are isomorphic negative (strongly) connected sequences of covariant functors from $^*\mathscr{C}(R)$ to $^*\mathscr{C}(R')$.

(iii) Let $L = \bigoplus_{n\in\mathbb{Z}} L_n$ be a graded R-module. Then $L \otimes_R R'$ is a graded R'-module: if we use the natural isomorphisms

$$L \otimes_R R' = L \otimes_R (R \otimes_{R_0} R'_0) \xrightarrow{\cong} (L \otimes_R R) \otimes_{R_0} R'_0 \xrightarrow{\cong} L \otimes_{R_0} R'_0$$

to identify $L \otimes_R R'$ with $L \otimes_{R_0} R'_0 =: L'$, then the grading on L' is given by $L' = \bigoplus_{n\in\mathbb{Z}} L'_n$, where L'_n is the natural image of $L_n \otimes_{R_0} R'_0$ in L'.

(iv) It follows from part (ii), and part (iii) applied to the graded R-module $H^i_{\mathfrak{a}}(M)$ (where M is a graded R-module), that, for all $i \in \mathbb{N}_0$ and all $n \in \mathbb{Z}$, there is a natural equivalence of functors (from ${}^*\mathscr{C}(R)$ to $\mathscr{C}(R'_0)$)

$$H^i_{\mathfrak{a}}(\,\cdot\,)_n \otimes_{R_0} R'_0 \longrightarrow H^i_{\mathfrak{a}R'}((\,\cdot\,) \otimes_R R')_n.$$

(v) We can deduce from 4.3.5, 12.2.10 and the formula in 2.2.13(ii) that there is a natural equivalence of functors

$$\varepsilon : D_{\mathfrak{a}}(\,\cdot\,) \otimes_R R' \longrightarrow D_{\mathfrak{a}R'}((\,\cdot\,) \otimes_R R')$$

from the 'graded' category ${}^*\mathscr{C}(R)$ to ${}^*\mathscr{C}(R')$.

(vi) If we now use part (v), and part (iii) applied to the graded R-module $D_{\mathfrak{a}}(M)$ (where M is a graded R-module), we obtain, for each $n \in \mathbb{Z}$, a natural equivalence of functors (from ${}^*\mathscr{C}(R)$ to $\mathscr{C}(R'_0)$)

$$D_{\mathfrak{a}}(\,\cdot\,)_n \otimes_{R_0} R'_0 \longrightarrow D_{\mathfrak{a}R'}((\,\cdot\,) \otimes_R R')_n.$$

We give two examples where the ideas of 15.2.2 can be used.

15.2.3 Example. Assume that $R = \bigoplus_{n\in\mathbb{N}_0} R_n$ is positively graded and homogeneous (see 15.1.1), let M be a graded R-module, and let $\mathfrak{p}_0 \in \operatorname{Spec}(R_0)$.

We can apply the techniques (and notation) of 15.2.2 with the choices $\mathfrak{a} = R_+$ and $R'_0 = (R_0)_{\mathfrak{p}_0}$, a flat R_0-algebra. The ring $R' = R \otimes_{R_0} (R_0)_{\mathfrak{p}_0}$ is again positively graded and homogeneous, and $M' = M \otimes_{R_0} (R_0)_{\mathfrak{p}_0}$ is a graded R'-module. Also, $R_+R' = R'_+$, the irrelevant ideal of R'. It follows from 15.2.2(iv) that, for each $i \in \mathbb{N}_0$ and each $n \in \mathbb{Z}$, there is an isomorphism of $(R_0)_{\mathfrak{p}_0}$-modules $\left(H^i_{R_+}(M)_n\right)_{\mathfrak{p}_0} \cong H^i_{R'_+}(M')_n$. Finally, note that the 0-th component of R' is a local ring isomorphic to $(R_0)_{\mathfrak{p}_0}$.

15.2.4 Example. Assume that $R = \bigoplus_{n\in\mathbb{N}_0} R_n$ is positively graded and homogeneous, and such that $(R_0, \mathfrak{m}_0)$ is local; let M be a graded R-module.

We can apply the techniques (and notation) of 15.2.2 with the choices $\mathfrak{a} = R_+$ and $R'_0 = R_0[X]_{\mathfrak{m}_0R_0[X]}$, the localization of the polynomial ring $R_0[X]$ at the prime ideal $\mathfrak{m}_0R_0[X]$. This R'_0 is a flat R_0-algebra, and $R' = R \otimes_{R_0} R_0[X]_{\mathfrak{m}_0R_0[X]}$

is positively graded and homogeneous, $M' = M \otimes_{R_0} R_0[X]_{\mathfrak{m}_0 R_0[X]}$ is a graded R'-module, and $R_+R' = R'_+$, the irrelevant ideal of R'.

It follows from 15.2.2(iv) that, for each $i \in \mathbb{N}_0$ and each $n \in \mathbb{Z}$, there is an isomorphism of $R_0[X]_{\mathfrak{m}_0 R_0[X]}$-modules

$$H^i_{R_+}(M)_n \otimes_{R_0} R_0[X]_{\mathfrak{m}_0 R_0[X]} \cong H^i_{R'_+}(M')_n;$$

thus, since $R_0[X]_{\mathfrak{m}_0 R_0[X]}$ is a faithfully flat R_0-algebra, $H^i_{R_+}(M)_n = 0$ if and only if $H^i_{R'_+}(M')_n = 0$.

Finally, note that the 0-th component of R' is a local ring isomorphic to $R_0[X]_{\mathfrak{m}_0 R_0[X]}$, having infinite residue field.

15.2.5 Theorem. *Assume that $R = \bigoplus_{n \in \mathbb{N}_0} R_n$ is positively graded and homogeneous; let M be a finitely generated graded R-module. Let $r \in \mathbb{Z}$ and $l \in \mathbb{N}$: the reader should note that we are assuming that l is* positive.

Assume that $H^i_{R_+}(M)_{r+1-i} = 0$ for all $i \geq l$. Then M is r-regular at and above level l (see 15.2.1(ii)*).*

Proof. It suffices to show that, for each $\mathfrak{p}_0 \in \operatorname{Spec}(R_0)$, the $(R_0)_{\mathfrak{p}_0}$-module $(H^i_{R_+}(M)_{s-i})_{\mathfrak{p}_0}$ vanishes for all $i \geq l$ and all $s > r$.

We can apply Examples 15.2.3 and 15.2.4 in turn to see that it is enough for us to establish the claim in the statement of the theorem under the additional assumption that $(R_0, \mathfrak{m}_0)$ is a local ring with infinite residue field, and we shall make this assumption in what follows.

It follows from [6, 1.5.4] that $\dim M$ is finite, and we are going to argue by induction on $\dim M$. When $\dim M = -1$ there is nothing to prove, and when $\dim M = 0$ the result is an easy consequence of Grothendieck's Vanishing Theorem 6.1.2.

Now suppose that $\dim M > 0$ and our desired result has been proved for all finitely generated graded R-modules of smaller dimension. Since $\Gamma_{R_+}(M)$ is a graded submodule of M, it follows from 2.1.7(iii) that, for each $i \in \mathbb{N}$, there is a homogeneous isomorphism $H^i_{R_+}(M) \cong H^i_{R_-}(M/\Gamma_{R_+}(M))$. In particular, since l is positive, $H^i_{R_-}(M/\Gamma_{R_+}(M))_{r+1-i} = 0$ for all $i \geq l$. Now we must have $\dim(M/\Gamma_{R_+}(M)) \leq \dim M$: if this inequality is strict, we can use the inductive assumption to achieve our aim; otherwise, for the purpose of this inductive step, we can replace M by $M/\Gamma_{R_+}(M)$ and so (in view of 2.1.2 and 2.1.1) assume that M is R_+-torsion-free and that R_- contains a non-zerodivisor on M. This we do.

Now $M \neq R_+M$ (since otherwise $M = 0$), and so, by Lemma 15.1.4(ii), there exists a homogeneous element $a \in R_1$ (and so of degree 1) which is a non-zerodivisor on M.

The exact sequence $0 \longrightarrow M \xrightarrow{a} M(1) \longrightarrow (M/aM)(1) \longrightarrow 0$ of graded R-modules and homogeneous homomorphisms induces a long exact sequence (in $^*\mathscr{C}(R)$) of local cohomology modules, from which we deduce (with the aid of 13.1.9(ii)) an exact sequence

$$H^i_{R_-}(M)_n \longrightarrow H^i_{R_-}(M/aM)_n \longrightarrow H^{i+1}_{R_+}(M)_{n-1} \xrightarrow{a} H^{i+1}_{R_+}(M)_n$$

of R_0-modules, for all $i \in \mathbb{N}$ and all $n \in \mathbb{Z}$. Use of this with $n = r+1-i$ shows that $H^i_{R_+}(M/aM)_{r+1-i} = 0$ for all $i \geq l$. Now $\dim(M/aM) < \dim M$ (since a lies outside every minimal prime ideal of $\mathrm{Supp}(M)$), and so it follows from the inductive hypothesis that M/aM is r-regular at and above level l.

Fix an integer $i \geq l$. For each $n \in \mathbb{Z}$, there is an exact sequence

$$H^i_{R_+}(M)_{n-1-i} \xrightarrow{a} H^i_{R_+}(M)_{n-i} \longrightarrow H^i_{R_+}(M/aM)_{n-i}$$

of R_0-modules. We know that $H^i_{R_+}(M)_{r+1-i} = H^i_{R_-}(M/aM)_{r+2-i} = 0$, and so it follows from the above exact sequence (with $n = r+2$) that $H^i_{R_+}(M)_{r+2-i} = 0$. We can now repeat this argument, using induction, to deduce that $H^i_{R_+}(M)_{r+j-i} = 0$ for all $j \in \mathbb{N}$. It follows that M is r-regular at and above level l. □

In the statement (and proof) of Theorem 15.2.5, we stressed that the integer l is assumed to be *positive*. In fact, if l in that theorem is replaced by 0, then the resulting statement is no longer always true: this is illustrated by the following exercise.

15.2.6 Exercise. Let the situation and notation be as in Theorem 15.2.5. Find a counterexample to the statement 'if $H^i_{R_+}(M)_{r+1-i} = 0$ for all $i \geq 0$, then M is r-regular at and above level 0 (that is, M is r-regular)' by considering $R := R_0[X_1, \ldots, X_n]$, the ring of polynomials in n (≥ 1) indeterminates over a commutative Noetherian ring R_0, graded in the usual way, and $M := {}^tR_0 \oplus R$ for an appropriate value of the integer t, where ${}^tR_0$ is as defined in 13.1.11.

The result of Theorem 15.2.5 can be rephrased thus: for a fixed positive integer l, if $H^i_{R_+}(M)_{r+1-i} = 0$ for all $i \geq l$, then $H^i_{R_+}(M)_{s-i} = 0$ for all $i \geq l$ and $s > r$. Some readers might find the interest in 'reverse diagonal vanishing' surprising, and they might find the following diagram helpful. The diagram concerns the special case of Theorem 15.2.5 in which R_0 is Artinian, so that, for all $i, n \in \mathbb{Z}$, the R_0-module $H^i_{R_+}(M)_n$ has finite length $h^i_M(n)$. In the diagram, $h^i_M(n)$ is plotted at the position (n, i) in the *Oni* co-ordinate plane. Theorem

15.2.5 shows that, if in the diagram

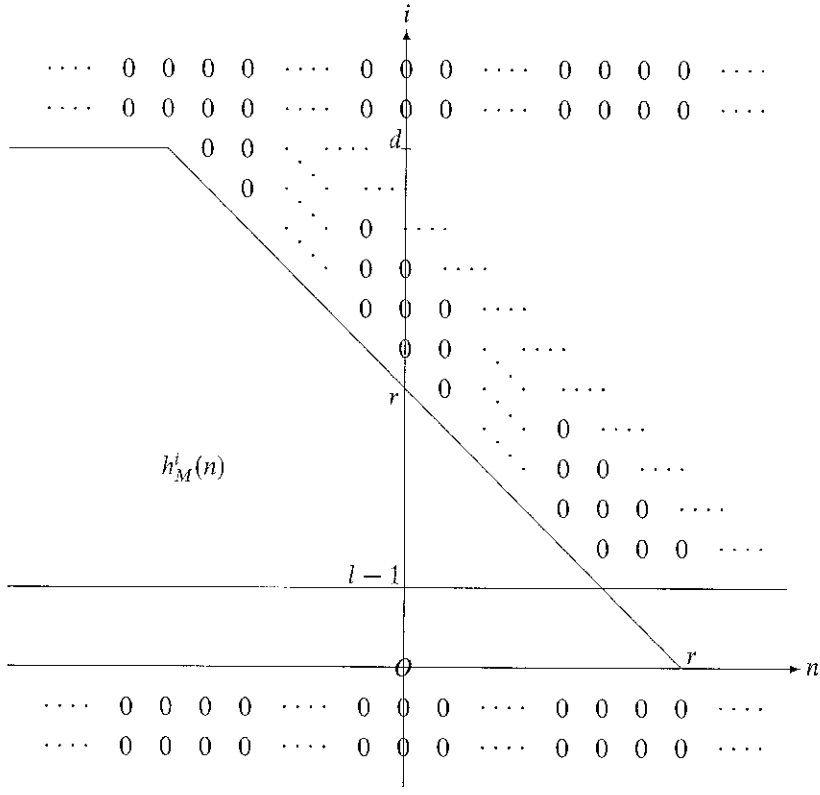

(in which d denotes $\dim M$) there is a line of zeros on the line $i+n=r+1$ above the line $i=l-1$, then there must be a similar line of zeros on the line $i+n=s$ above the line $i=l-1$ for every integer $s>r$.

Some readers may wonder whether 'vertical vanishing' works just as well in this context as 'reverse diagonal vanishing'. It doesn't: the following example provides a counterexample to the statement 'if $H^i_{R_+}(M)_{r+1}=0$ for all $i\in\mathbb{N}$ (where R is positively graded and homogeneous and M is a finitely generated graded R-module), then $H^i_{R_+}(M)_s=0$ for all $i\in\mathbb{N}$ and $s>r$'.

15.2.7 Example. We consider again the example studied in 12.4.7. Thus K is a field, $d\in\mathbb{N}$ with $d\geq 3$, and $A_{(d)}$ is the subring of the d-th Veronesean subring $K[X,Y]^{(d)}$ of the ring $K[X,Y]$ of polynomials over K in two indeterminates X

and Y given by $A_{(d)} := K[X^d, X^{d-1}Y, XY^{d-1}, Y^d]$, with grading inherited from $K[X,Y]^{(d)}$.

Since $A_{(d)}$ is a 2-dimensional domain, we have $H^i_{A_{(d)+}}(A_{(d)}) = 0$ if $i = 0$ or $i > 2$. By 12.4.7, for $n \in \mathbb{Z}$, we have $H^1_{A_{(d)+}}(A_{(d)})_n \neq 0$ if and only if $1 \leq n \leq d-3$.

Let $\phi : A_{(d)} \longrightarrow K[X,Y]^{(d)}$ denote the inclusion homomorphism. We showed in 12.4.7 that there is a homogeneous $A_{(d)}$-isomorphism $\operatorname{Coker}\phi \cong H^1_{A_{(d)+}}(A_{(d)})$. It therefore follows from 2.1.7(i) that there is a homogeneous $A_{(d)}$-isomorphism $H^2_{A_{(d)+}}(A_{(d)}) \cong H^2_{A_{(d)+}}(K[X,Y]^{(d)})$. Further, arguments we provided in 12.4.7, together with 12.4.6 and the Graded Independence Theorem 13.1.6, show that there are homogeneous $A_{(d)}$-isomorphisms

$$\begin{aligned} H^2_{A_{(d)+}}(K[X,Y]^{(d)}) &\cong H^2_{A_{(d)+}K[X,Y]^{(d)}}(K[X,Y]^{(d)}) \\ &= H^2_{(K[X,Y]_+)^{(d)}}(K[X,Y]^{(d)}) \\ &\cong (H^2_{(X,Y)}(K[X,Y]))^{(d,0)}. \end{aligned}$$

It now follows from 12.4.1 and 12.4.6 that $H^2_{A_{(d)+}}(A_{(d)})_n \neq 0$ if and only if $n < 0$.

We can now conclude, for $r, s \in \mathbb{Z}$, that $H^i_{A_{(d)+}}(A_{(d)})_{s-i} = 0$ for all $i \in \mathbb{Z}$ if and only if $s > d-2$. Thus $A_{(d)}$ is r-regular if and only if $r \geq d-2$.

Notice also that $H^i_{A_{(d)+}}(A_{(d)})_0 = 0$ for all $i \in \mathbb{N}$, whereas, when $d > 3$, we have $H^1_{A_{(d)+}}(A_{(d)})_1 \neq 0$: thus this example shows that the statement 'if $H^i_{R_+}(M)_{r+1} = 0$ for all $i \in \mathbb{N}$ (where R is positively graded and homogeneous and M is a finitely generated graded R-module), then $H^i_{R_+}(M)_s = 0$ for all $i \in \mathbb{N}$ and $s > r$' is false.

15.2.8 Remarks. Assume that R is positively graded and homogeneous; let M be a finitely generated graded R-module. Let $r \in \mathbb{Z}$ and let l be a *positive* integer.

(i) It follows from Theorem 15.2.5 that M is r-regular at and above level l if and only if $H^i_{R_+}(M)_{r+1-i} = 0$ for all $i \geq l$.

(ii) However, M is r-regular at and above level 0 (that is, M is r-regular) if and only if $H^i_{R_+}(M)_{r+1-i} = 0$ for all $i \in \mathbb{Z}$ and $H^0_{R_+}(M)_s = 0$ for all $s > r$. This is precisely the condition used to define the condition 'M is r-regular' by D. Eisenbud and S. Goto [8, p. 95].

We are now ready to define Castelnuovo regularity, and also some refinements which have been studied by several authors, including U. Nagel [40], Nagel and P. Schenzel [41, Definition 6.1] and L. T. Hoa and C. Miyazaki [27, §2].

15.2.9 Definition. Assume that $R = \bigoplus_{n\in\mathbb{N}_0} R_n$ is positively graded and homogeneous, and let M be a finitely generated graded R-module. Let $l \in \mathbb{N}_0$. The end of a graded R-module was defined in 13.1.1.

We define the *(Castelnuovo-Mumford) regularity* $\operatorname{reg}(M)$ *of* M by

$$\begin{aligned}\operatorname{reg}(M) &:= \sup\left\{\operatorname{end}(H^i_{R_+}(M)) + i : i \in \mathbb{N}_0\right\}\\ &= \sup\left\{\operatorname{end}(H^i_{R_+}(M)) + i : 0 \le i \le \dim M\right\}.\end{aligned}$$

Furthermore, the *(Castelnuovo-Mumford) regularity* $\operatorname{reg}^l(M)$ *of* M *at and above level* l is defined by $\operatorname{reg}^l(M) := \sup\left\{\operatorname{end}(H^i_{R_+}(M)) + i : i \ge l\right\}$. Thus the regularity $\operatorname{reg}^0(M)$ of M at and above level 0 is the regularity $\operatorname{reg}(M)$ of M. Furthermore,

$$\operatorname{reg}^l(M) = \inf\left\{r \in \mathbb{Z} : M \text{ is } r\text{-regular at and above level } l\right\}.$$

Observe that, since there are only finitely many integers i for which $H^i_{R_+}(M) \neq 0$, it follows from 15.1.5(ii) that $\operatorname{reg}(M)$ is either an integer or $-\infty$. Note also that $\operatorname{reg}^l(M) \le \operatorname{reg}^{l-1}(M) \le \ldots \le \operatorname{reg}^0(M) = \operatorname{reg}(M)$.

Observe also that, by 13.1.9(ii), $\operatorname{reg}^l(M(t)) = \operatorname{reg}^l(M) - t$ for all $t \in \mathbb{Z}$.

15.2.10 ♯Exercise. Let the situation be as in 15.2.9.

(i) Show that $\operatorname{reg}^l(M) = -\infty$ if and only if $H^i_{R_+}(M) = 0$ for all $i \ge l$.

(ii) Let $\mathfrak{p}$ be a minimal prime of $R_+ + (0 :_R M)$ and assume that $l \le \operatorname{ht}(\mathfrak{p}/(0 :_R M))$. Show that $\operatorname{reg}^l(M) > -\infty$.

(iii) Assume that R_0 is Artinian and local, and that $M \neq 0$. Show that $\operatorname{reg}^l(M) = -\infty$ if and only if $l > \operatorname{ht}\left((R_+ + (0 :_R M))/(0 :_R M)\right)$.

15.2.11 ♯Exercise. Let R_0 be a commutative Noetherian ring, let $n \in \mathbb{N}$, and let $R := R_0[X_1, \ldots, X_n]$, the ring of polynomials over R_0, graded in the usual way. Use Example 12.4.1 to show that $\operatorname{reg}(R) = 0$.

15.2.12 Proposition. *Assume that* $R = \bigoplus_{n\in\mathbb{N}_0} R_n$ *is positively graded and homogeneous, and let* $M = \bigoplus_{n\in\mathbb{Z}} M_n$ *be a finitely generated graded* R*-module. Then* $\operatorname{reg}^1(M) = -\infty$ *if and only if* $M_n = 0$ *for all* $n >> 0$.

Proof. ($\Leftarrow$) Suppose $n_0 \in \mathbb{N}$ is such that $M_n = 0$ for all $n \in \mathbb{Z}$ with $|n| \ge n_0$. Then $(R_+)^{2n_0}M = 0$, so that M is R_+-torsion. Therefore, by 2.1.7(i), we have $H^i_{R_+}(M) = 0$ for all $i > 0$, and so $\operatorname{reg}^1(M) = -\infty$.

($\Rightarrow$) Assume that $\operatorname{reg}^1(M) = -\infty$. This means that $H^i_{R_+}(M) = 0$ for all $i > 0$. It therefore follows from 2.1.7(iii) and 2.1.2 that $H^i_{R_+}(M/\Gamma_{R_+}(M)) = 0$ for all $i \in \mathbb{N}_0$. Hence $M/\Gamma_{R_+}(M) = R_+(M/\Gamma_{R_+}(M))$, by 6.2.7 and 6.2.4. It follows from this that, since $M/\Gamma_{R_+}(M)$ is finitely generated and graded, we must have

$M/\Gamma_{R_+}(M) = 0$. Hence $M = \Gamma_{R_+}(M)$, and the desired result follows from this and the fact that M is finitely generated. □

15.2.13 ♯Exercise. Let the situation be as in Proposition 15.2.12. Show that $\operatorname{reg}(M) = -\infty$ if and only if $M = 0$.

15.2.14 Exercise. Assume that $R = \bigoplus_{n\in\mathbb{N}_0} R_n$ is positively graded and homogeneous. Let $M = \bigoplus_{n\in\mathbb{Z}} M_n$ be a finitely generated graded R-module, let $l, l' \in \mathbb{N}_0$ with $l \geq l'$, and let $r \in \mathbb{Z}$.

It is clear that if M is r-regular at and above level l', then M is r-regular at and above level l. Give an example to show that the converse statement is not always true.

15.2.15 ♯Exercise. Assume that $R = \bigoplus_{n\in\mathbb{N}_0} R_n$ is positively graded and homogeneous, let $l \in \mathbb{N}_0$, and let $0 \longrightarrow L \longrightarrow M \longrightarrow N \longrightarrow 0$ be an exact sequence of finitely generated graded R-modules and homogeneous homomorphisms. Show that

(i) $\operatorname{reg}(L) \leq \max\{\operatorname{reg}(M), \operatorname{reg}(N) + 1\}$,
(ii) $\operatorname{reg}^{l+1}(L) \leq \max\{\operatorname{reg}^{l+1}(M), \operatorname{reg}^{l}(N) + 1\}$,
(iii) $\operatorname{reg}^{l}(M) \leq \max\{\operatorname{reg}^{l}(L), \operatorname{reg}^{l}(N)\}$, and
(iv) $\operatorname{reg}^{l}(N) \leq \max\{\operatorname{reg}^{l+1}(L) - 1, \operatorname{reg}^{l}(M)\}$.

15.3 Degrees of generators

The following theorem is one of the main reasons for our introduction of the concept of regularity. Among its consequences are the links, hinted at in the introduction to this chapter, between local cohomology theory and the syzygies of finitely generated graded modules over a polynomial ring over a field.

15.3.1 Theorem. *Assume that $R = \bigoplus_{n\in\mathbb{N}_0} R_n$ is positively graded and homogeneous, and let $M = \bigoplus_{n\in\mathbb{Z}} M_n$ be a non-zero finitely generated graded R-module. Then M can be generated by homogeneous elements of degrees not exceeding* $\operatorname{reg}(M)$.

Proof. Our strategy in this proof has some similarities to that for our proof of Theorem 15.2.5 above, inasmuch as we apply 15.2.3 and 15.2.4 to reduce to the case in which R_0 is local with infinite residue field.

Let N be the graded submodule of M generated by $\bigoplus_{n\leq\operatorname{reg}(M)} M_n$: we must show that $M = N$.

It suffices to show that $M_{\mathfrak{p}_0} = N_{\mathfrak{p}_0}$ for each $\mathfrak{p}_0 \in \operatorname{Spec}(R_0)$. We use 15.2.3: consider the positively graded, homogeneous ring $R' = R \otimes_{R_0} (R_0)_{\mathfrak{p}_0}$ and the graded R'-module $M' = M \otimes_{R_0} (R_0)_{\mathfrak{p}_0}$, which is finitely generated. By 15.2.3, $\operatorname{reg}(M') \leq \operatorname{reg}(M)$; also, under the canonical isomorphism between M' and $M_{\mathfrak{p}_0}$, the R'-submodule of M' generated by all homogeneous elements of degrees not exceeding $\operatorname{reg}(M)$ is mapped onto $N_{\mathfrak{p}_0}$. It is therefore enough for us to establish the claim in the statement of the theorem under the additional assumption that R_0 is local. We can then use 15.2.4 in a similar way to see that it is enough for us to establish the claim under the additional assumption that $(R_0, \mathfrak{m}_0)$ is a local ring with infinite residue field, and we shall make this assumption in what follows.

Now $d := \dim M$ is finite, and $\operatorname{reg}(M) \neq -\infty$ since $M \neq 0$ (by 15.2.13). We argue by induction on d. Consider first the case where $d = 0$. Then $\operatorname{Ass} M = \{\mathfrak{m}_0 \oplus R_+\}$, so that there exists $t \in \mathbb{N}$ such that $(R_+)^t M = 0$. In this case, $M = \Gamma_{R_+}(M)$ and so $H^i_{R_+}(M) = 0$ for all $i \in \mathbb{N}$, by 2.1.7(ii). Thus $\operatorname{reg}(M) = \operatorname{end}(M)$, and it is obvious that M can be generated by homogeneous elements of degrees not exceeding $\operatorname{end}(M)$.

Now suppose that $\dim M > 0$ and our desired result has been proved for all non-zero, finitely generated graded R-modules of smaller dimensions. Of course, $\Gamma_{R_+}(M)$, if non-zero, can be generated by homogeneous elements of degrees not exceeding $\operatorname{end}(\Gamma_{R_+}(M))$; since $\operatorname{end}(\Gamma_{R_+}(M)) \leq \operatorname{reg}(M)$, it follows from the exact sequence

$$0 \longrightarrow \Gamma_{R_+}(M) \longrightarrow M \longrightarrow M/\Gamma_{R_+}(M) \longrightarrow 0$$

that it is enough for us to show that $M/\Gamma_{R_+}(M)$ can be generated by homogeneous elements of degrees not exceeding $\operatorname{reg}(M)$. Note that

$$\operatorname{reg}(M/\Gamma_{R_+}(M)) = \operatorname{reg}^1(M) \leq \operatorname{reg}(M).$$

Now $\dim(M/\Gamma_{R_+}(M)) \leq \dim M$: if this inequality is strict, we can use the inductive assumption to achieve our aim; otherwise, for the purpose of this inductive step, we can replace M by $M/\Gamma_{R_-}(M)$ and so (in view of 2.1.2 and 2.1.1) assume that M is R_+-torsion-free and that R_- contains a non-zerodivisor on M. This we do.

Note that $M \neq R_+.M$. Then, by Lemma 15.1.4(ii), there exists a homogeneous element $a \in R_1$ (and so of degree 1) which is a non-zerodivisor on M. Apply 15.2.15(iv) to the exact sequence

$$0 \longrightarrow M(-1) \xrightarrow{a} M \longrightarrow M/aM \longrightarrow 0$$

of graded R-modules and homogeneous homomorphisms to see that

$$\operatorname{reg}(M/aM) \leq \max\left\{\operatorname{reg}^1(M(-1)) - 1, \operatorname{reg}(M)\right\} = \operatorname{reg}(M).$$

Now $\dim(M/aM) < \dim M$, and so it follows from the inductive hypothesis that M/aM can be generated by homogeneous elements of degrees not exceeding $\operatorname{reg}(M/aM)$. Hence $M = N + aM$. Now R is *local with unique *maximal graded ideal $\mathfrak{m} := \mathfrak{m}_0 \oplus R_+$; it follows from Nakayama's Lemma that $M_{\mathfrak{m}} = N_{\mathfrak{m}}$, so that $M = N$ by 13.1.13(ii) applied to M/N. □

15.3.2 ♯Exercise. Let $R := K[X_1, \ldots, X_n]$, the ring of polynomials in n (≥ 1) indeterminates over a field K, graded in the usual way. Let $\mathfrak{a}$ be a proper graded ideal of R such that $H^0_{R_+}(R/\mathfrak{a}) = H^n_{R_+}(R/\mathfrak{a}) = 0$. Use 15.2.11, 15.2.15 and 15.3.1 to show that $0 \leq \operatorname{reg}^1(R/\mathfrak{a}) = \operatorname{reg}^2(\mathfrak{a}) - 1$.

In the following definition and subsequent exercises, we consider a geometric significance of the Castelnuovo regularity.

15.3.3 Definition and Remark. Let K be an algebraically closed field, and let $r \in \mathbb{N}$. Let $V \subset \mathbb{P}^r(K)$ be a projective variety. Consider $R := K[X_0, \ldots, X_r]$ as the coordinate ring $\mathcal{O}(\mathbb{A}^{r+1}(K))$. Then the graded prime ideal $I_{\mathbb{P}^r(K)}(V) := I_{\mathbb{A}^{r+1}(K)}(\operatorname{Cone}(V))$ of R is non-zero: we define the *Castelnuovo-Mumford regularity* $\operatorname{reg}(V)$ *of* V by $\operatorname{reg}(V) := \operatorname{reg}(I_{\mathbb{P}^r(K)}(V))$.

Note that $H^0_{R_+}(R) = H^1_{R_+}(R) = 0$, and the homogeneous coordinate ring $\mathcal{O}(\operatorname{Cone}(V))$ of V is an integral domain. It follows from these observations and 15.3.2 that

$$\begin{aligned}\operatorname{reg}(V) &= \operatorname{reg}(I_{\mathbb{P}^r(K)}(V)) = \operatorname{reg}^1(I_{\mathbb{P}^r(K)}(V)) = \operatorname{reg}^2(I_{\mathbb{P}^r(K)}(V)) \\ &= \operatorname{reg}^1(\mathcal{O}(\operatorname{Cone}(V))) + 1 = \operatorname{reg}(\mathcal{O}(\operatorname{Cone}(V))) + 1.\end{aligned}$$

Note that, by 15.3.1, the vanishing ideal $I_{\mathbb{P}^r(K)}(V)$ can be generated by homogeneous polynomials of degrees not exceeding $\operatorname{reg}(V)$.

15.3.4 Exercise. Let K be an algebraically closed field, and let $r \in \mathbb{N}$. Let $V \subset \mathbb{P}^r(K)$ be a projective variety such that $\dim V > 0$. Let $n \in \mathbb{N}$ be such that $\operatorname{reg}(V) \leq n + 1$.

(i) Show that the n-th Veronesean $V^{(n)} \subseteq \mathbb{P}^{\binom{r+n}{r}-1}(K)$ of V is such that we have arithdepth $V^{(n)} > 1$.

(ii) Show that $\operatorname{reg}(V^{(n)}) \leq \dim V + 2$.

15.3.5 Exercise. Let K be an algebraically closed field, and let $d \in \mathbb{N}$ with $d > 1$. Here we study again the rational normal curve in projective d-space $N_{(d)} \subseteq \mathbb{P}^d(K)$ of 14.2.3.

Consider the Veronesean subring $K[X_0, X_1]^{(d)}$ of the ring $K[X_0, X_1]$ of polynomials over K in two indeterminates X_0, X_1, and the polynomial ring

$K[Y_0, \ldots, Y_d]$ in $d+1$ indeterminates $Y_0, \ldots, Y_d$ as the coordinate ring $\mathcal{O}(\mathbb{A}^{d+1}(K))$. Let $\phi : K[Y_0, \ldots, Y_d] \longrightarrow K[X_0, X_1]^{(d)}$ be the K-algebra homomorphism for which $\phi(Y_0) = X_0^d$, $\phi(Y_1) = X_0^{d-1}X_1, \ldots, \phi(Y_{d-1}) = X_0X_1^{d-1}$, $\phi(Y_d) = X_1^d$. Then $\operatorname{Ker}\phi = I_{\mathbb{P}^d(K)}(N_{(d)})$.

(i) Calculate $\operatorname{reg}(N_{(d)})$, and deduce that $I_{\mathbb{P}^d(K)}(N_{(d)})$ can be generated by quadratics.

(ii) Calculate the dimension of $I_{\mathbb{P}^d(K)}(N_{(d)})_2$, the component of degree 2 of $I_{\mathbb{P}^d(K)}(N_{(d)})$, as a vector space over K.

(iii) Deduce that $I_{\mathbb{P}^d(K)}(N_{(d)})$ can be generated by the 2×2 minors of the matrix

$$\begin{bmatrix} Y_0 & Y_1 & Y_2 & \ldots & Y_{d-2} & Y_{d-1} \\ Y_1 & Y_2 & Y_3 & \ldots & Y_{d-1} & Y_d \end{bmatrix}.$$

15.3.6 Exercise. Use the notation of 14.2.5, but in the special case in which $d = 4$. Thus K is an algebraically closed field, and $A_{(4)}$ is the subring $K[X^4, X^3Y, XY^3, Y^4]$ of the ring $K[X, Y]$ of polynomials over K in two indeterminates X and Y. Also, $\psi : K[Y_0, Y_1, Y_2, Y_3] \longrightarrow A_{(4)}$ is the K-algebra homomorphism for which $\psi(Y_0) = X^4$, $\psi(Y_1) = X^3Y$, $\psi(Y_2) = XY^3$ and $\psi(Y_3) = Y^4$, and $\operatorname{Ker}\psi$ is the vanishing ideal of the projective variety $\Sigma_{(4)} \subseteq \mathbb{P}^3(K)$.

(i) Calculate $\operatorname{reg}(\Sigma_{(4)})$, and deduce that $I_{\mathbb{P}^3(K)}(\Sigma_{(4)})$ can be generated by homogeneous polynomials of degrees not exceeding 3.

(ii) For $i = 2, 3$, calculate the dimension of $I_{\mathbb{P}^3(K)}(\Sigma_{(4)})_i$, the component of degree i of $I_{\mathbb{P}^3(K)}(\Sigma_{(4)})$, as a vector space over K. Find a quadratic and three cubics which generate $I_{\mathbb{P}^3(K)}(\Sigma_{(4)})$.

The next exercise uses Theorem 15.3.1 to establish connections between the regularity of a finitely generated graded module M over a polynomial ring over a field and the syzygies of M: we hinted at these connections in the introduction to this chapter. The result of the exercise is presented by Eisenbud and Goto in [8, p. 89], although they state that it is not new and has origins in ideas of Castelnuovo and Mumford.

15.3.7 ♯Exercise. Let K be a field and let $R := K[X_1, \ldots, X_n]$, the ring of polynomials over K in n indeterminates (where $n \in \mathbb{N}$), graded in the usual way. Note that R is *local with unique *maximal graded ideal $\mathfrak{m} := (X_1, \ldots, X_n)$, and that $\mathfrak{m}$ is actually maximal. Let M be a non-zero finitely generated graded R-module having $\operatorname{proj\,dim} M = p$. We refer the reader to [6, pp. 35-6] for fundamental facts concerning the minimal graded free resolution of M: let this be

$$0 \longrightarrow F_p \xrightarrow{f_p} F_{p-1} \longrightarrow \ldots \longrightarrow F_1 \xrightarrow{f_1} F_0 \longrightarrow 0,$$

so that there exist $b_0, \ldots, b_p \in \mathbb{N}$ and, for each $j = 0, \ldots, p$, integers $a_i^{(j)}$ $(i = 1, \ldots, b_j)$ such that $a_1^{(j)} \geq \ldots \geq a_{b_j}^{(j)}$ and $F_j = \bigoplus_{i=1}^{b_j} R(a_i^{(j)})$; also, $f_1, \ldots, f_p$ are all homogeneous, there is a homogeneous epimorphism $f_0 : F_0 \longrightarrow M$, and it and the other f_j are such that the sequence

$$0 \longrightarrow F_p \xrightarrow{f_p} F_{p-1} \longrightarrow \ldots \longrightarrow F_0 \xrightarrow{f_0} M \longrightarrow 0$$

is exact; furthermore, $\operatorname{Ker} f_j \subseteq \mathfrak{m}F_j$ for all $j = 0, \ldots, p$.

The positive integers $b_0, \ldots, b_p$, and the tuples $(a_1^{(j)}, \ldots, a_{b_j}^{(j)})$ $(j = 0, \ldots, p)$, are invariants of M.

(i) Show that $\operatorname{reg}(F_0) = -a_{b_0}^{(0)}$. (You might find Exercise 15.2.11 helpful.)

(ii) Use Theorem 15.3.1 to show that $-a_{b_0}^{(0)} \leq \operatorname{reg}(M)$.

(iii) Suppose that $p > 0$ and let $L := \operatorname{Ker} f_0$. Use part (i) above and Exercise 15.2.15(i) to show that $\operatorname{reg}(L) \leq \operatorname{reg}(M) + 1$.

(iv) Prove, by induction on p, that

$$\operatorname{reg}(M) = \max\left\{-a_{b_j}^{(j)} - j : j = 0, \ldots, p\right\}.$$

15.3.8 Example. Consider the situation of Exercise 15.3.7 above in the special case in which $M = R/\mathfrak{b}$, where $\mathfrak{b}$ is a proper graded ideal of R. Since $R/\mathfrak{b}$ can be generated by one homogeneous element of degree 0, and since $\operatorname{Ker} f_j \subseteq \mathfrak{m}F_j$ for all $j = 0, \ldots, p$, it follows that, in this case, $b_0 = 1$, $a_1^{(0)} = 0$, and $-a_1^{(j+1)} \geq -a_1^{(j)} + 1$ for all $j = 0, \ldots p - 1$. Hence $-a_1^{(j)} \geq j$ for all $j = 0, \ldots, p$.

On the other hand, by 15.3.7(iv), we have $-a_{b_j}^{(j)} \leq \operatorname{reg}(M) + j$ for all $j = 0, \ldots, p$. Thus, for a given integer j such that $0 \leq j \leq p$, the integers $-a_i^{(j)}$ $(1 \leq i \leq b_j)$ are constrained to lie in the interval

$$\{r \in \mathbb{N}_0 : j \leq r \leq \operatorname{reg}(M) + j\}$$

of length $\operatorname{reg}(M)$.

15.3.9 ♯Exercise. Assume that $R = \bigoplus_{n \in \mathbb{N}_0} R_n$ is positively graded and homogeneous, and let M be a non-zero finitely generated graded R-module. Let $a_1, \ldots, a_h$ be homogeneous elements of R with $\deg a_i = n_i > 0$ for $i = 1, \ldots, h$, and suppose that $a_1, \ldots, a_h$ is an M-sequence. Use Exercise 15.2.15 to show that

$$\operatorname{reg}^1\left(M/\textstyle\sum_{i=1}^h a_i M\right) \leq \operatorname{reg}^1(M) + \displaystyle\sum_{i=1}^h n_i - h \leq \operatorname{reg}\left(M/\textstyle\sum_{i=1}^h a_i M\right),$$

and that both inequalities in this display are equalities if $\operatorname{grade}_M(R_+) > h$.

16

Bounds of diagonal type

Let K be an algebraically closed field, let $r \in \mathbb{N}$ and let $V \subset \mathbb{P}^r(K)$ be a projective variety. Let $\mathfrak{p}$ denote the vanishing ideal $I_{\mathbb{P}^r(K)}(V)$ of V, so that $\mathfrak{p}$ is the (non-zero) graded prime ideal $I_{\mathbb{A}^{r+1}(K)}(\mathrm{Cone}(V))$ of $K[X_0, \ldots, X_r] = \mathcal{O}(\mathbb{A}^{r+1}(K))$. In 15.3.3, we introduced the Castelnuovo-Mumford regularity $\mathrm{reg}(V)$ of V, and pointed out that $\mathrm{reg}(V) = \mathrm{reg}(\mathfrak{p}) = \mathrm{reg}^1(\mathfrak{p}) = \mathrm{reg}^2(\mathfrak{p})$ and that $\mathfrak{p}$ can be generated by homogeneous polynomials of degrees not exceeding $\mathrm{reg}(V)$. Since $\mathfrak{p}$ can be used to define V, in the sense that $V = V_{\mathbb{P}^r(K)}(\mathfrak{p})$, the regularity $\mathrm{reg}^2(\mathfrak{p})$ of $\mathfrak{p}$ at and above level 2 provides an upper bound on the degrees of homogeneous polynomials needed to define V. For this reason, we are, in turn, interested in upper bounds on $\mathrm{reg}^2(\mathfrak{p})$.

This chapter is concerned with upper bounds on the regularity at and above level 2 which are '*a priori*' in the sense that they are always available for finitely generated graded R-modules when $R = \bigoplus_{n \in \mathbb{N}_0} R_n$ is positively graded and homogeneous, and R_0 is an Artinian ring. In this situation, for a finitely generated graded R-module M, it follows from Proposition 15.1.5 that the R_0-module $H^i_{R_+}(M)_n$ has finite length, for all $i \in \mathbb{N}_0$ and all $n \in \mathbb{Z}$: we denote this length by $h^i_M(n)$. The bounds on $\mathrm{reg}^2(M)$ which we shall obtain in this chapter will be expressed in terms of the integers $h^2_M(-2), h^3_M(-3), \ldots, h^{d'}_M(-d')$, where $d' \in \mathbb{N}$ with $d' \geq d := \dim M$, and they are accordingly called '*a priori* bounds of diagonal type'.

It is natural to hope that one might be able to bound $\mathrm{reg}^2(M)$ in terms of $h^2_M(-2), h^3_M(-3), \ldots, h^d_M(-d)$ (the so-called *cohomological lengths of M in the diagonal at and above level* 2) simply because, by Definition 15.2.9 and Theorem 15.2.5, $\mathrm{reg}^2(M) < 0$ if and only if $h^2_M(-2) = h^3_M(-3) = \ldots = h^d_M(-d) = 0$.

16.1 Some basic lemmas

In more detail, our main aim in this chapter is to produce, for each integer $d \geq 2$, a 'right bounding function' $C^{(d)} : \mathbb{N}_0{}^{d-1} \longrightarrow \mathbb{N}_0$, such that, whenever $R = \bigoplus_{n \in \mathbb{N}_0} R_n$ is positively graded and homogeneous and R_0 is an Artinian ring, and M is a finitely generated graded R-module such that $\dim M \leq d$, then

$$\operatorname{reg}^2(M) < C^{(d)}(h^2_M(-2), \ldots, h^d_M(-d)).$$

The functions $C^{(d)}$ will be defined, in conjunction with some additional functions $B^{(d)}$ $(d \geq 2)$, inductively, and, indeed, our proof of the above inequality will use an inductive argument which requires quite a bit of machinery. The first two lemmas of the chapter, 16.1.2 and 16.1.3, form the basis for this machinery.

16.1.1 Notation. When $R = \bigoplus_{n \in \mathbb{N}_0} R_n$ is positively graded and such that R_0 is an Artinian ring, and M is a finitely generated graded R-module, it follows from Proposition 15.1.5 that the R_0-module $H^i_{R_+}(M)_n$ has finite length, for all $i \in \mathbb{N}_0$ and all $n \in \mathbb{Z}$: we denote this length by $h^i_M(n)$.

16.1.2 Lemma. *Assume that $R = \bigoplus_{n \in \mathbb{N}_0} R_n$ is positively graded and homogeneous, and let $M = \bigoplus_{n \in \mathbb{Z}} M_n$ be a finitely generated graded R-module.*

If $\operatorname{reg}^2(M) \neq -\infty$, then each of $D_{R_+}(M)$ and $H^1_{R_+}(M)$ can be generated by homogeneous elements of degrees not exceeding $\operatorname{reg}^2(M)$.

If $\operatorname{reg}^2(M) = -\infty$, then, for each $t \in \mathbb{Z}$, both $D_{R_+}(M)$ and $H^1_{R_+}(M)$ can be generated by homogeneous elements of degrees not exceeding t.

Proof. Since there are homogeneous isomorphisms

$$D_{R_+}(M) \xrightarrow{\cong} D_{R_+}(M/\Gamma_{R_+}(M)) \quad \text{and} \quad H^1_{R_+}(M) \xrightarrow{\cong} H^1_{R_+}(M/\Gamma_{R_+}(M))$$

(by 12.2.10, 2.2.8(ii) and 2.1.7(iii)), and since $\operatorname{reg}^2(M) = \operatorname{reg}^2(M/\Gamma_{R_+}(M))$, we can replace M by $M/\Gamma_{R_+}(M)$ and so (in view of 2.1.2) assume that M is R_+-torsion-free. We shall make this simplification.

Since M is finitely generated, there exists $h \in \mathbb{Z}$ such that $M_n = 0$ for all $n < h$. If $\operatorname{reg}^2(M) \neq -\infty$, choose $t \in \mathbb{Z}$ such that $t \leq \min\{h, \operatorname{reg}^2(M)\}$; if $\operatorname{reg}^2(M) = -\infty$, let t be any integer such that $t \leq h$. With the notation of 15.1.1, let $N := D_{R_+}(M)_{\geq t}$. Note that N is a finitely generated R-module, by 15.1.6(i). Also, by choice of t, the homogeneous monomorphism $\eta_M : M \longrightarrow D_{R_+}(M)$ satisfies $\operatorname{Im} \eta_M \subseteq N$; thus $N/\operatorname{Im} \eta_M \subseteq D_{R_+}(M)/\operatorname{Im} \eta_M \cong H^1_{R_+}(M)$, and so $N/\operatorname{Im} \eta_M$ is finitely generated and R_+-torsion. It therefore follows from 2.1.7(i) that there is a (homogeneous) isomorphism $H^i_{R_+}(M) \xrightarrow{\cong} H^i_{R_+}(N)$ for each $i > 1$, so that $\operatorname{reg}^2(M) = \operatorname{reg}^2(N)$.

Let $C = \bigoplus_{n\in\mathbb{Z}} C_n$ be the graded R-module $D_{R_+}(M)/N$. Since

$$H^i_{R_+}(D_{R_+}(M)) = 0 \qquad \text{for } i = 0, 1$$

by 2.2.8(iv), it follows from the exact sequence

$$0 \longrightarrow N \longrightarrow D_{R_+}(M) \longrightarrow C \longrightarrow 0$$

(in the category $^*\mathscr{C}(R)$) that $H^0_{R_+}(N) = 0$ and there is a homogeneous isomorphism $\Gamma_{R_+}(C) \xrightarrow{\cong} H^1_{R_+}(N)$. Now $\Gamma_{R_+}(C)$ is a graded submodule of C, and $C_n = 0$ for all $n \geq t$. Therefore $\operatorname{end}(H^1_{R_+}(N)) + 1 \leq t - 1 + 1 = t$. In the case where $\operatorname{reg}^2(M) \neq -\infty$, it follows that

$$\operatorname{reg}(N) = \operatorname{reg}^2(N) = \operatorname{reg}^2(M) \geq t,$$

whereas, in the case where $\operatorname{reg}^2(M) = -\infty$, we have $\operatorname{reg}(N) \leq t$.

It follows from 15.3.1 that $N = D_{R_+}(M)_{\geq t}$, if non-zero, can be generated by homogeneous elements of degrees not exceeding $\operatorname{reg}(N)$, so that, since $H^1_{R_+}(M)$ is a homomorphic image of $D_{R_+}(M)$ by a homogeneous homomorphism, all the claims are proved. □

16.1.3 Lemma. *Assume that $R = \bigoplus_{n\in\mathbb{N}_0} R_n$ is positively graded and homogeneous, and let M be a finitely generated graded R-module. Suppose that $a \in R_1$ is a non-zerodivisor on M. Then*

(i) *for all integers $m \geq \operatorname{reg}^2(M/aM) - 1$, the multiplication map $H^2_{R_+}(M)_{m-1} \xrightarrow{a} H^2_{R_+}(M)_m$ is surjective; and*

(ii) *for all integers $m \geq \operatorname{reg}^2(M/aM)$ such that $H^2_{R_+}(M)_{m-1} \neq 0$, the multiplication map $H^2_{R_+}(M)_{m-1} \xrightarrow{a} H^2_{R_+}(M)_m$ is not injective.*

Proof. (i) By 13.1.9(ii), the exact sequence

$$0 \longrightarrow M \xrightarrow{a} M(1) \longrightarrow (M/aM)(1) \longrightarrow 0$$

of graded R-modules and homogeneous homomorphisms induces an exact sequence

$$H^2_{R_+}(M)_{m-1} \xrightarrow{a} H^2_{R_+}(M)_m \longrightarrow H^2_{R_+}(M/aM)_m$$

of R_0-modules, for all $m \in \mathbb{Z}$, and $H^2_{R_+}(M/aM)_m = 0$ when $m+1 \geq \operatorname{reg}^2(M/aM)$.

(ii) For each $m \in \mathbb{Z}$, let

$$\beta_m : R_1 \otimes_{R_0} H^1_{R_+}(M/aM)_m \longrightarrow H^1_{R_+}(M/aM)_{m+1}$$

be the R_0-homomorphism for which $\beta_m(r_1 \otimes z) = r_1 z$ for all $r_1 \in R_1$ and $z \in H^1_{R_+}(M/aM)_m$, and let $\gamma_m : R_1 \otimes_{R_0} H^1_{R_+}(M)_m \longrightarrow H^1_{R_+}(M)_{m+1}$ be defined similarly.

Let $m_0 \in \mathbb{Z}$ be such that $H^1_{R_+}(M/aM)$ can be generated by homogeneous elements of degrees not exceeding m_0: by Lemma 16.1.2, we can take $m_0 = \operatorname{reg}^2(M/aM)$ if $\operatorname{reg}^2(M/aM) \neq -\infty$, and we can take m_0 to be an arbitrary integer if $\operatorname{reg}^2(M/aM) = -\infty$. Since R is homogeneous, it follows that, for all $m \geq m_0$, each element $y \in H^1_{R_+}(M/aM)_{m+1}$ can be expressed in the form $\sum_{i=1}^t a_i z_i$ for suitable $a_1, \ldots, a_t \in R_1$ and $z_1, \ldots, z_t \in H^1_{R_-}(M/aM)_m$. In other words, β_m is surjective for all $m \geq m_0$.

Let $\pi : M \longrightarrow M/aM$ be the canonical epimorphism, and, for each $m \in \mathbb{Z}$, let $\alpha_m : H^1_{R_+}(M)_m \longrightarrow H^1_{R_-}(M/aM)_m$ be the m-th component of the homogeneous homomorphism $H^1_{R_+}(\pi)$. Observe that the diagram

$$\begin{tikzcd}
R_1 \otimes_{R_0} H^1_{R_+}(M)_m \arrow[r, "\gamma_m"] \arrow[d, "\mathrm{Id}_{R_1} \otimes \alpha_m"] & H^1_{R_+}(M)_{m+1} \arrow[d, "\alpha_{m+1}"] \\
R_1 \otimes_{R_0} H^1_{R_+}(M/aM)_m \arrow[r, "\beta_m"] & H^1_{R_-}(M/aM)_{m+1}
\end{tikzcd}$$

commutes. It follows that, if, for some $m \geq m_0$, we know that α_m is surjective, then α_{m+1} is surjective too.

Consider an $m \geq m_0$ and suppose that $H^2_{R_+}(M)_{m-1} \xrightarrow{a} H^2_{R_+}(M)_m$ is injective. By 13.1.9(ii), the exact sequence

$$0 \longrightarrow M(-1) \xrightarrow{a} M \longrightarrow M/aM \longrightarrow 0$$

induces an exact sequence

$$H^1_{R_+}(M)_n \xrightarrow{\alpha_n} H^1_{R_+}(M/aM)_n \longrightarrow H^2_{R_+}(M)_{n-1} \xrightarrow{a} H^2_{R_+}(M)_n$$

of R_0-modules for all $n \in \mathbb{Z}$. This exact sequence (in the case where $n = m$) shows that α_m is surjective, and so it follows, as explained in the immediately preceding paragraph, that α_{m+1} is surjective and α_n is surjective for all $n \geq m$. It follows from the above exact sequence that $H^2_{R_+}(M)_{n-1} \xrightarrow{a} H^2_{R_+}(M)_n$ is injective for all $n \geq m$. Therefore $H^2_{R_+}(M)_{m-1} = 0$ (recall that $a \in R_+$ and $H^2_{R_+}(M)$ is R_+-torsion). $\square$

The following lemma is a consequence of Lemmas 16.1.2 and 16.1.3, and it provides the key for the crucial inductive arguments of this chapter.

16.1.4 Lemma. *Assume that $R = \bigoplus_{n \in \mathbb{N}_0} R_n$ is positively graded and homogeneous, and that R_0 is Artinian; let M be a finitely generated graded R-module. Suppose that $a \in R_1$ is a non-zerodivisor on M.*

Let $n_0, q \in \mathbb{Z}$ with $q \geq \max\{n_0, \operatorname{reg}^2(M/aM) - 1\}$; for each $n \geq n_0$, set

$$s(n) := h^2_M(n_0) + \sum_{m=n_0+1}^{n} h^2_{M/aM}(m).$$

Then

(i) $h^2_M(n) \leq s(n)$ *for all* $n \geq n_0$;
(ii) $s(n) = s(q)$ *for all* $n \geq q$, *and* $s(q) = s(q-1)$ *if* $q > n_0$; *and*
(iii) $h^2_M(n) \leq \max\{0, s(q) + q - n\}$ *for all* $n > q$.

Proof. (i) By 13.1.9(ii), the exact sequence

$$0 \longrightarrow M \xrightarrow{a} M(1) \longrightarrow (M/aM)(1) \longrightarrow 0$$

of graded R-modules and homogeneous homomorphisms induces, for each $m \in \mathbb{Z}$, an exact sequence

$$H^2_{R_+}(M)_{m-1} \xrightarrow{a} H^2_{R_+}(M)_m \longrightarrow H^2_{R_+}(M/aM)_m$$

of R_0-modules, from which we deduce that

$$\begin{aligned} h^2_M(m) &= \ell_{R_0}(H^2_{R_+}(M)_m) \\ &\leq \ell_{R_0}(H^2_{R_+}(M)_{m-1}) + \ell_{R_0}(H^2_{R_+}(M/aM)_m) \\ &= h^2_M(m-1) + h^2_{M/aM}(m), \end{aligned}$$

and the claim follows easily from this.

(ii) For $m > q \geq \operatorname{reg}^2(M/aM) - 1$, we have $q \geq \operatorname{end}(H^2_{R_+}(M/aM)) + 1$, so that

$$H^2_{R_+}(M/aM)_m = H^2_{R_+}(M/aM)_q = 0.$$

Hence $h^2_{M/aM}(m) = h^2_{M/aM}(q) = 0$. Hence $s(n) = s(q)$ for all $n \geq q$, and $s(q) = s(q-1)$ if $q > n_0$.

(iii) For $m \geq q + 1 \geq \operatorname{reg}^2(M/aM)$, we have, by Lemma 16.1.3, that the multiplication map $H^2_{R_+}(M)_{m-1} \xrightarrow{a} H^2_{R_+}(M)_m$ is surjective, and is not injective unless $H^2_{R_+}(M)_{m-1} = 0$; therefore, if $h^2_M(m-1) \neq 0$, then $h^2_M(m) \leq h^2_M(m-1) - 1$. Thus $h^2_M(m) \leq \max\{0, h^2_M(m-1) - 1\}$ for all $m \geq q + 1$. Repeated use of this then shows that

$$h^2_M(n) \leq \max\{0, h^2_M(q) - (n-q)\} \qquad \text{for all } n \geq q + 1,$$

and the claim follows from part (i). □

16.2 The right bounding functions

We now come to the definition of the 'right bounding functions' mentioned at the beginning of Section 16.1.

16.2.1 Notation. Let $\mathbb{Z}_{\geq -2} := \{n \in \mathbb{Z} : n \geq -2\}$. We are now going to define, for each integer $d > 1$, numerical functions

$$B^{(d)} : \mathbb{N}_0{}^{d-1} \times \mathbb{Z}_{\geq -2} \longrightarrow \mathbb{N}_0 \qquad \text{and} \qquad C^{(d)} : \mathbb{N}_0{}^{d-1} \longrightarrow \mathbb{N}_0.$$

The definitions will be made by induction on d.

First, we define

$$B^{(2)}(h_2; n) = \max\{0, h_2 - (n+2)\} \qquad \text{for all } (h_2; n) \in \mathbb{N}_0 \times \mathbb{Z}_{\geq -2}$$

and take $C^{(2)} : \mathbb{N}_0 \longrightarrow \mathbb{N}_0$ to be the identity function, so that $C^{(2)}(h_2) = h_2$ for all $h_2 \in \mathbb{N}_0$.

Now suppose that $d > 2$ and that the functions $B^{(d-1)}$ and $C^{(d-1)}$ have already been defined. To simplify notation, we introduce the function $\sigma^{(d)} : \mathbb{N}_0{}^{d-1} \longrightarrow \mathbb{N}_0{}^{d-2}$ defined by

$$\sigma^{(d)}(h_2, \ldots, h_d) = (h_2 + h_3, h_3 + h_4, \ldots, h_{d-1} + h_d) \quad \text{for all } (h_2, \ldots, h_d) \in \mathbb{N}_0{}^{d-1},$$

and set, for $(h; n) = (h_2, \ldots, h_d; n) \in \mathbb{N}_0{}^{d-1} \times \mathbb{Z}_{\geq -2}$,

$$q = q^{(d)}(h) := C^{(d-1)}(\sigma^{(d)}(h)) - 2, \qquad \overline{n} := \min\{n, q\}.$$

The new functions $B^{(d)}$ and $C^{(d)}$ are defined as follows: for all $(h; n) = (h_2, \ldots, h_d; n) \in \mathbb{N}_0{}^{d-1} \times \mathbb{Z}_{\geq -2}$,

$$B^{(d)}(h; n) := \max\left\{0, h_2 + \sum_{m=-1}^{\overline{n}} B^{(d-1)}(\sigma^{(d)}(h); m) + \overline{n} - n\right\}$$

and

$$C^{(d)}(h) := q + 2 + B^{(d)}(h; q).$$

For each $d \geq 2$, we call $C^{(d)}$ the *d-th right bounding function.*

We shall also find it convenient to use the function

$$\mu^{(d)} : \mathbb{N}_0{}^{d-1} \longrightarrow \mathbb{N}_0$$

defined by $\mu^{(d)}(h) = \max\{B^{(d)}(h; n) : n \in \mathbb{Z}_{\geq -2}\}$ for all $h \in \mathbb{N}_0{}^{d-1}$.

16.2.2 Remark. We use the notation of 16.2.1. Let $d \in \mathbb{N}$ with $d > 2$ and let $h = (h_2, \ldots, h_d) \in \mathbb{N}_0{}^{d-1}$. As in 16.2.1, denote $q^{(d)}(h) = C^{(d-1)}(\sigma^{(d)}(h)) - 2$ by q. Note that

(i) $B^{(d)}(h;n) = h_2 + \sum_{m=-1}^{n} B^{(d-1)}(\sigma^{(d)}(h);m)$ for $n = -2, -1, \ldots, q$,
(ii) $B^{(d)}(h;n) = \max\{0, B^{(d)}(h;q) + q - n\}$ for all $n \geq q$, and
(iii) $\mu^{(d)}(h) = B^{(d)}(h;q) = B^{(d)}(h;q^{(d)}(h))$.

16.2.3 ♯Exercise. We use the notation of 16.2.1. For $s \in \mathbb{N}$ and $h := (h_1, \ldots, h_s)$, $k := (k_1, \ldots, k_s) \in \mathbb{N}_0{}^s$, we write $h \preceq k$ precisely when $h_i \leq k_i$ for all $i = 1, \ldots, s$. Also, we denote the element $(0, \ldots, 0)$ of $\mathbb{N}_0{}^s$ by 0. Let $d \in \mathbb{N}$ with $d > 1$.

(i) Let $h, k \in \mathbb{N}_0{}^{d-1}$ be such that $h \preceq k$. Show that
  (a) $B^{(d)}(h;n) \leq B^{(d)}(k;n)$ for all $n \geq -2$, and
  (b) $C^{(d)}(h) \leq C^{(d)}(k)$.

(ii) Show that
  (a) $B^{(d)}(0;n) = 0$ for all $n \geq -2$, and
  (b) $C^{(d)}(0) = 0$.

The next Theorem 16.2.4, which the reader might like to compare with results in [4], and its Corollary 16.2.6, are the main results of this chapter; they explain the name 'right bounding function'.

16.2.4 Theorem. *Assume that $R = \bigoplus_{n \in \mathbb{N}_0} R_n$ is positively graded and homogeneous, and that $(R_0, \mathfrak{m}_0)$ is local and Artinian. Let $d \in \mathbb{N}$ with $d > 1$, and let $h := (h_2, \ldots, h_d) \in \mathbb{N}_0{}^{d-1}$; we use the functions introduced in* 16.2.1.

Then, for each finitely generated graded R-module M such that $\dim M \leq d$ *and $h^i_M(-i) \leq h_i$ for all $i = 2, \ldots, d$, we have*

(i) $h^2_M(n) \leq B^{(d)}(h;n)$ *for all $n \geq -2$, and*
(ii) $\operatorname{reg}^2(M) < C^{(d)}(h)$.

Proof. First, we use the ideas of Example 15.2.4 to see that it is enough for us to establish the claims in the statement of the theorem under the additional assumption that the local ring R_0 has infinite residue field: in the notation of 15.2.4, note that $\operatorname{reg}^2(M) = \operatorname{reg}^2(M')$, that $\mathfrak{m}'_0 := \mathfrak{m}_0 R'_0$ is the unique maximal ideal of $R'_0 := R_0[X]_{\mathfrak{m}_0 R_0[X]}$, that

$$\ell_{R'_0}(H^i_{R'_+}(M')_n) = \ell_{R_0}(H^i_{R_+}(M)_n) \qquad \text{for all } i \in \mathbb{N}_0 \text{ and all } n \in \mathbb{Z},$$

and that, since the maximal ideal $\mathfrak{m}_0 + R_+$ is the unique *maximal graded ideal of R, and a similar comment applies to R', we can deduce from 13.1.14 and the flatness of R' over R that

$$\begin{aligned}\dim_{R'} M' &= \dim_{R'_{\mathfrak{m}'_0+R'_+}} M'_{\mathfrak{m}'_0+R'_+} \\ &= \dim_{R_{\mathfrak{m}_0+R_+}} M_{\mathfrak{m}_0+R_+} = \dim_R M.\end{aligned}$$

We therefore assume that R_0 has infinite residue field in what follows.

We can, and do, assume that $\dim M > 0$. Twice in this proof, we shall use the following argument concerning $\overline{M} := M/\Gamma_{R_-}(M)$. Since there are homogeneous isomorphisms $H^i_{R_+}(M) \xrightarrow{\cong} H^i_{R_+}(\overline{M})$ for all $i \in \mathbb{N}$, we see that $h^i_M(n) = h^i_{\overline{M}}(n)$ for all $i \geq 2$ and $n \in \mathbb{Z}$ and that $\operatorname{reg}^2(M) = \operatorname{reg}^2(\overline{M})$. Also $0 < \dim \overline{M} = \dim M$, and by 2.1.2, 2.1.1 and 15.1.4(ii), there exists a homogeneous element in R_1 which is a non-zerodivisor on M.

We are now going to argue by induction on d. First, consider the case where $d = 2$. By the previous paragraph, we can replace M by $\overline{M}$, and so assume that there exists $a \in R_1$ which is a non-zerodivisor on M. Then $\dim(M/aM) \leq 1$, so that $\operatorname{reg}^2(M/aM) = -\infty$ and $h^2_{M/aM}(m) = 0$ for all $m \in \mathbb{Z}$. Apply Lemma 16.1.4 with the choices $n_0 = q = -2$: we obtain (for all $n \geq -1$, and, clearly, for $n = -2$)

$$\begin{aligned} h^2_M(n) &\leq \max\{0, h^2_M(-2) - 2 - n\} \\ &\leq \max\{0, h_2 - 2 - n\} = B^{(2)}(h_2; n). \end{aligned}$$

This also shows that $\operatorname{end}(H^2_{R_+}(M)) < h_2 - 2$, so that, since $H^i_{R_+}(M) = 0$ for all $i > 2$, we have $\operatorname{reg}^2(M) < h_2 = C^{(2)}(h_2)$.

Now suppose that $d > 2$ and that our desired results have been proved for smaller values of d. Again we replace M by $\overline{M}$, so that we can assume there exists $a \in R_1$ which is a non-zerodivisor on M. By 13.1.9(ii), the exact sequence

$$0 \longrightarrow M \xrightarrow{a} M(1) \longrightarrow (M/aM)(1) \longrightarrow 0$$

of graded R-modules and homogeneous homomorphisms induces an exact sequence

$$H^i_{R_+}(M)_{-i} \longrightarrow H^i_{R_+}(M/aM)_{-i} \longrightarrow H^{i+1}_{R_+}(M)_{-(i+1)}$$

of R_0-modules, for all $i \in \mathbb{N}$; hence

$$h^i_{M/aM}(-i) \leq h^i_M(-i) + h^{i+1}_M(-(i+1)) \qquad \text{for each } i = 2, \ldots, d-1.$$

Now $\sigma^{(d)}(h_2, \ldots, h_d) = (h_2 + h_3, h_3 + h_4, \ldots, h_{d-1} + h_d)$, and so it follows from the inductive hypothesis that

$$h^2_{M/aM}(m) \leq B^{(d-1)}(\sigma^{(d)}(h); m) \qquad \text{for all } m \geq -2,$$

and $\operatorname{reg}^2(M/aM) < C^{(d-1)}(\sigma^{(d)}(h))$. Apply Lemma 16.1.4 with the choices $n_0 = -2$ and $q = C^{(d-1)}(\sigma^{(d)}(h)) - 2$, and bear in mind 16.2.2: for $n = -2, \ldots, q$, we obtain

$$\begin{aligned} h^2_M(n) &\leq h^2_M(-2) + \sum_{m=-1}^{n} h^2_{M/aM}(m) = s(n) \\ &\leq h_2 + \sum_{m=-1}^{n} B^{(d-1)}(\sigma^{(d)}(h); m) = B^{(d)}(h; n); \end{aligned}$$

on the other hand, for $n > q$, we obtain

$$\begin{aligned} h^2_M(n) &\leq \max\{0, s(q) + q - n\} \\ &\leq \max\left\{0, B^{(d)}(h;q) + q - n\right\} = B^{(d)}(h;n). \end{aligned}$$

Hence $h^2_M(n) \leq B^{(d)}(h;n)$ for all $n \geq -2$.

The last display shows that $\operatorname{end}(H^2_{R_+}(M)) + 2 < B^{(d)}(h;q) + q + 2 = C^{(d)}(h)$. Since $\operatorname{reg}^2(M/aM) < C^{(d-1)}(\sigma^{(d)}(h)) = q + 2$, it follows that, for all $i > 2$,

$$\operatorname{end}(H^{i-1}_{R_+}(M/aM)) \leq q + 2 - (i-1) - 1 = q + 2 - i.$$

So, for each $m \geq q + 2 - i$, the exact sequence

$$H^{i-1}_{R_+}(M/aM)_{m+1} \longrightarrow H^i_{R_+}(M)_m \xrightarrow{a} H^i_{R_+}(M)_{m+1}$$

shows that the multiplication map $H^i_{R_+}(M)_m \xrightarrow{a} H^i_{R_+}(M)_{m+1}$ is injective; hence $H^i_{R_+}(M)_m = 0$ and

$$\operatorname{end}(H^i_{R_+}(M)) \leq q + 1 - i \leq q + 2 - i - 1 \leq C^{(d)}(h) - i - 1.$$

It follows that $\operatorname{reg}^2(M) < C^{(d)}(h)$. □

16.2.5 Remark. Assume that $R = \bigoplus_{n \in \mathbb{N}_0} R_n$ is positively graded and homogeneous, and such that R_0 is Artinian. Let $\mathfrak{m}_0^{(1)}, \ldots, \mathfrak{m}_0^{(t)}$ be the maximal ideals of R_0. Let M be a finitely generated graded R-module. For each $j = 1, \ldots, t$, set $R'^{(j)} := R \otimes_{R_0} (R_0)_{\mathfrak{m}_0^{(j)}}$ and $M'^{(j)} := M \otimes_{R_0} (R_0)_{\mathfrak{m}_0^{(j)}}$.

(i) For each R_0-module N, the natural R_0-homomorphism $\omega_N : N \longrightarrow \bigoplus_{j=1}^t N_{\mathfrak{m}_0^{(j)}}$ (for which $\omega_N(y) = (y/1, \ldots, y/1)$ for all $y \in N$) is an isomorphism; therefore, when N is finitely generated, its length $\ell_{R_0}(N)$ satisfies $\ell_{R_0}(N) = \sum_{j=1}^t \ell_{(R_0)_{\mathfrak{m}_0^{(j)}}}\left(N_{\mathfrak{m}_0^{(j)}}\right)$.

(ii) Since $\mathfrak{m}_0^{(1)} + R_+, \ldots, \mathfrak{m}_0^{(t)} + R_+$ are the only *maximal graded ideals of R and, for $j = 1, \ldots, t$, the ring $R'^{(j)}$ is isomorphic, as a graded ring, to the homogeneous localization (see 13.1.1) $R_{\left(\mathfrak{m}_0^{(j)} + R_+\right)}$, it follows that

$$\dim M = \max\left\{\dim_{R'^{(j)}} M'^{(j)} : j = 1, \ldots, t\right\}.$$

(iii) Fix an integer j between 1 and t. Note that, by 15.2.3, the ring $R'^{(j)}$ is positively graded and homogeneous, and has 0-th component isomorphic to the Artinian local ring $(R_0)_{\mathfrak{m}_0^{(j)}}$; moreover, $R_+ R'^{(j)} = R'^{(j)}_+$ and there is an

$(R_0)_{\mathfrak{m}_0^{(j)}}$-isomorphism

$$\left(H^i_{R_+}(M)_n\right)_{\mathfrak{m}_0^{(j)}} \cong H^i_{R_+^{(j)}}(M'^{(j)})_n \qquad \text{for each } i \in \mathbb{N}_0 \text{ and each } n \in \mathbb{Z}.$$

Also, by 15.2.2(vi), there is an $(R_0)_{\mathfrak{m}_0^{(j)}}$-isomorphism

$$\left(D_{R_+}(M)_n\right)_{\mathfrak{m}_0^{(j)}} \cong D_{R_+^{(j)}}(M'^{(j)})_n \qquad \text{for each } n \in \mathbb{Z}.$$

Note that, by 15.1.6(ii), for each $n \in \mathbb{Z}$, the R_0-module $D_{R_+}(M)_n$ has finite length: we denote this length by $d^0_M(n)$.

(iv) It follows from parts (i) and (iii) that

$$\operatorname{reg}^l(M) = \max\left\{\operatorname{reg}^l(M'^{(j)}) : j = 1, \ldots, t\right\} \qquad \text{for all } l \in \mathbb{N}_0,$$

that $h^i_M(n) = \sum_{j=1}^t h^i_{M'^{(j)}}(n)$ for all $i \in \mathbb{N}_0$ and $n \in \mathbb{Z}$, and that (with an obvious notation) $d^0_M(n) = \sum_{j=1}^t d^0_{M'^{(j)}}(n)$ for all $n \in \mathbb{Z}$.

16.2.6 Corollary. *Assume that $R = \bigoplus_{n\in\mathbb{N}_0} R_n$ is positively graded and homogeneous, and that R_0 is Artinian. Let $d \in \mathbb{N}$ with $d > 1$.*

Then, for each finitely generated graded R-module M such that $\dim M \leq d$, *we have*

$$\operatorname{reg}^2(M) < C^{(d)}(h^2_M(-2), \ldots, h^d_M(-d)).$$

Proof. Use the notation of 16.2.5. It follows from 16.2.5(iv) and Theorem 16.2.4(ii) that

$$\operatorname{reg}^2(M'^{(j)}) < C^{(d)}(h^2_M(-2), \ldots, h^d_M(-d)) \qquad \text{for all } j = 1, \ldots, t.$$

Since $\operatorname{reg}^2(M) = \max\left\{\operatorname{reg}^2(M'^{(j)}) : j = 1, \ldots, t\right\}$ (again by 16.2.5(iv)), the result follows. □

16.2.7 Exercise. Assume that $R = \bigoplus_{n\in\mathbb{N}_0} R_n$ is positively graded and homogeneous, and that R_0 is Artinian. Let $t \in \mathbb{Z}$. Let M be a finitely generated graded R-module of dimension 1 which can be generated by homogeneous elements of degrees not exceeding t. Show that $h^1_M(n) \leq \max\left\{0, h^1_M(n-1) - 1\right\}$ for all $n \geq t$, perhaps by working through the following programme.

(i) Show that it is enough to prove the result under the additional assumptions that R_0 is local with infinite residue field and $\Gamma_{R_1}(M) = 0$; show that, under these circumstances, R_1 contains a non-zerodivisor on M.

(ii) Let $a \in R_1$ be a non-zerodivisor on M. Show that if, for some integer

$n \geq t-1$, the multiplication map $M_n \xrightarrow{a} M_{n+1}$ is an isomorphism, then $M_{n+1} \xrightarrow{a} M_{n+2}$ is an isomorphism too.

(iii) Let $a \in R_1$ be a non-zerodivisor on M. Show that the multiplication map $D_{R_+}(M) \xrightarrow{a} D_{R_+}(M)(1)$ is an isomorphism, and deduce that, for $n \in \mathbb{Z}$, the map $M_n \xrightarrow{a} M_{n+1}$ is an isomorphism if and only if $H^1_{R_+}(M)_n \xrightarrow{a} H^1_{R_+}(M)_{n+1}$ is an isomorphism. Deduce that, for each $n \geq t-1$, the map $H^1_{R_+}(M)_n \xrightarrow{a} H^1_{R_+}(M)_{n+1}$ is (a) surjective, and (b) only injective if $H^1_{R_+}(M)_n = 0$.

(iv) Complete the proof that $h^1_M(n) \leq \max\{0, h^1_M(n-1)-1\}$ for all $n \geq t$.

16.2.8 Exercise. Assume that $R = \bigoplus_{n\in\mathbb{N}_0} R_n$ is positively graded and homogeneous, and that R_0 is Artinian. Let M be a finitely generated graded R-module of dimension 2. Show that $h^2_M(n) \leq \max\{0, h^2_M(n-1)-1\}$ for all $n \in \mathbb{Z}$. (Here is a hint: reduce to a situation where Lemma 16.1.3 can be used.)

The next three exercises indicate how one can extend the result of 16.2.8 to a finitely generated graded R-module of dimension greater than 2.

16.2.9 Exercise. Assume that $R = \oplus_{n\in\mathbb{N}_0} R_n$ is positively graded, and let M be a finitely generated graded R-module. Suppose that $t \in \mathbb{N}$ and $c \in R_t$ is a non-zerodivisor on $M/\Gamma_{R_+}(M)$; let $\pi : M \longrightarrow M/cM$ be the natural epimorphism. Show that, for each integer $i \geq 1$ and each $n \in \mathbb{Z}$, there is an exact sequence

$$\cdots \longrightarrow H^i_{R_+}(M)_{n-t} \xrightarrow{c} H^i_{R_+}(M)_n \xrightarrow{H^i_{R_+}(\pi)_n} H^i_{R_+}(M/cM)_n$$

$$\longrightarrow H^{i+1}_{R_+}(M)_{n-t} \xrightarrow{c} H^{i+1}_{R_+}(M)_n \longrightarrow \cdots.$$

16.2.10 Exercise. Assume that $R = \oplus_{n\in\mathbb{N}_0} R_n$ is positively graded and homogeneous, and let M be a finitely generated graded R-module. For each graded R-module N, let $\overline{N}$ denote the graded R-module $N/\Gamma_{R_+}(N)$. Suppose that $a, b \in R_1$ are such that a is a non-zerodivisor on $\overline{M}$ and b is a non-zerodivisor on $\overline{M/aM}$. Let $i \in \mathbb{Z}$ with $i > 1$.

(i) Show that, for each $n \in \mathbb{Z}$, there is a commutative diagram

$$\begin{tikzcd}
H^i_{R_+}(M/aM)_n \arrow[r, "b"] & H^i_{R_+}(M/aM)_{n+1} \\
H^i_{R_+}(M)_n \arrow[r, "b"] \arrow[u] & H^i_{R_+}(M)_{n+1} \arrow[u] \\
H^i_{R_+}(M)_{n-1} \arrow[r, "b"] \arrow[u, "a"] & H^i_{R_+}(M)_n \arrow[u, "a"] \\
H^{i-1}_{R_+}(M/aM)_n \arrow[r, "b"] \arrow[u] & H^{i-1}_{R_+}(M/aM)_{n+1} \arrow[u] \\
H^{i-1}_{R_+}(M)_n \arrow[r, "b"] \arrow[u] & H^{i-1}_{R_+}(M)_{n+1} \arrow[u]
\end{tikzcd}$$

of R_0-modules and R_0-homomorphisms with exact columns. Show also that, again for each $n \in \mathbb{Z}$, there is an exact sequence

$$\begin{aligned}
\cdots \longrightarrow H^{i-1}_{R_+}(M/aM)_n &\xrightarrow{b} H^{i-1}_{R_+}(M/aM)_{n+1} \longrightarrow H^{i-1}_{R_+}(M/(a,b)M)_{n+1} \\
\longrightarrow H^i_{R_+}(M/aM)_n &\xrightarrow{b} H^i_{R_+}(M/aM)_{n+1} \longrightarrow \cdots .
\end{aligned}$$

(ii) Use part (i) to show that, for all $m \geq \operatorname{end}(H^{i-1}_{R_+}(M/(a,b)M))$, the multiplication map $H^i_{R_+}(M)_{m-1} \xrightarrow{a} H^i_{R_+}(M)_m$ is (a) surjective, and (b) only injective if $H^i_{R_+}(M)_{m-1} = 0$.

16.2.11 Exercise. Assume that $R = \bigoplus_{n \in \mathbb{N}_0} R_n$ is positively graded and homogeneous, and that R_0 is Artinian. Let M be a finitely generated graded R-module of dimension $d > 2$. Show that $h^d_M(n) \leq \max\{0, h^d_M(n-1) - 1\}$ for all $n \in \mathbb{Z}$.

16.3 Polynomial representations

The reader could be excused for thinking that Corollary 16.2.6 is all very well, but what form do the functions $C^{(d)}$ take, can they be compared satisfactorily with polynomials, and, if so, what are the degrees of those comparable polynomials? We are therefore going to produce, in Example 16.3.1 below, explicit formulae for the $B^{(3)}(h_2, h_3; n)$ and $C^{(3)}(h_2, h_3)$ of 16.2.1.

16.3.1 Example. Using the notation of 16.2.1, but interpreting d as 3, so that $q = h_2 + h_3 - 2$, we have, by 16.2.2, for all $(h_2, h_3; n) \in \mathbb{N}_0{}^2 \times \mathbb{Z}_{\geq -2}$,

$$B^{(3)}(h_2, h_3; n) = \begin{cases} h_2 + \sum_{m=-1}^{n} B^{(2)}(\sigma^{(3)}(h_2, h_3); m) & \text{if } -2 \leq n \leq q, \\ B^{(3)}(h_2, h_3; q) + q - n & \text{if } q \leq n \leq B^{(3)}(h_2, h_3; q) + q, \\ 0 & \text{if } B^{(3)}(h_2, h_3; q) + q \leq n. \end{cases}$$

Furthermore, for $m \in \mathbb{Z}$ with $m \geq -1$,

$$\begin{aligned} B^{(2)}(\sigma^{(3)}(h_2, h_3); m) &= B^{(2)}(h_2 + h_3; m) \\ &= \max\{0, h_2 + h_3 - (m+2)\} \\ &= h_2 + h_3 - m - 2 \qquad \text{for } m \leq h_2 + h_3 - 2 = q. \end{aligned}$$

Thus, for $-2 \leq n \leq q = h_2 + h_3 - 2$, we have

$$\begin{aligned} B^{(3)}(h_2, h_3; n) &= h_2 + \textstyle\sum_{m=-1}^{n} (h_2 + h_3 - m - 2) \\ &= h_2 + (n+2)(h_2 + h_3) - \tfrac{1}{2}(n+3)(n+2) \\ &= -\tfrac{1}{2}n^2 + n(h_2 + h_3 - \tfrac{5}{2}) + 3h_2 + 2h_3 - 3. \end{aligned}$$

Note also that, for all $(h_2, h_3) \in \mathbb{N}_0{}^2$,

$$\begin{aligned} \mu^{(3)}(h_2, h_3) &= B^{(3)}(h_2, h_3; q) \\ &= B^{(3)}(h_2, h_3; h_2 + h_3 - 2) \\ &= h_2 + (h_2 + h_3)^2 - \tfrac{1}{2}(h_2 + h_3 + 1)(h_2 + h_3) \\ &= \tfrac{1}{2}\left((h_2 + h_3)^2 + h_2 - h_3\right) \end{aligned}$$

and

$$C^{(3)}(h_2, h_3) = q + 2 + B^{(3)}(h_2, h_3; q) = \tfrac{1}{2}\left((h_2 + h_3)^2 + 3h_2 + h_3\right).$$

Example 16.3.1 sets the scene for Theorem 16.3.3 below, in which we prove that, for general $d > 2$, the function $C^{(d)}$ can be represented by a polynomial (in $d-1$ indeterminates). Exercise 16.3.2 is included merely for use in the proof of 16.3.3.

16.3.2 ♯Exercise. Let R' be an integral domain which contains the rational field $\mathbb{Q}$ as a subring; let $f' \in R'[Y]$, where Y is an indeterminate; and let $a, b \in R'$.

Show, perhaps by induction on $\deg f'$, that there is a unique polynomial $f \in R'[Y]$ such that $f(Y) - f(Y-1) = f'(Y)$ and $f(a) = b$.

16.3.3 Theorem. *We again use the notation of* 16.2.1. *Let $d \in \mathbb{N}$ with $d > 2$. For each $h = (h_2, \ldots, h_d) \in \mathbb{N}_0{}^{d-1}$, and each $i = 2, \ldots, d-1$, set*

$$h^{(i)} := \sigma^{(i+1)} \circ \sigma^{(i+2)} \circ \ldots \circ \sigma^{(d)}(h)$$

and interpret $h^{(d)}$ as h and $C^{(1)}(h^{(1)})$ as 0 (even though $h^{(1)}$ has not been defined).

(i) *For all $i = 2, \ldots, d$ and all $h \in \mathbb{N}_0{}^{d-1}$, we have*

$$0 = C^{(1)}(h^{(1)}) \leq C^{(2)}(h^{(2)}) \leq \ldots \leq C^{(d-1)}(h^{(d-1)}) \leq C^{(d)}(h^{(d)}).$$

(ii) *There exist polynomials $\beta_2^{(d)}, \ldots, \beta_d^{(d)} \in \mathbb{Q}[X_2, \ldots, X_d; Y]$ (in d indeterminates $X_2, \ldots, X_d, Y$) such that, for $i \in \{2, \ldots, d\}$ and all $(h_2, \ldots, h_d; n) = (h; n) \in \mathbb{N}_0{}^{d-1} \times \mathbb{Z}_{\geq -2}$ with $C^{(i-1)}(h^{(i-1)}) - 2 \leq n \leq C^{(i)}(h^{(i)}) - 2$,*

$$B^{(d)}(h; n) = \beta_i^{(d)}(h_2, \ldots, h_d; n),$$

and there exist rational polynomials $m^{(d)}, g^{(d)} \in \mathbb{Q}[X_2, \ldots, X_d]$ such that, for all $h = (h_2, \ldots, h_d) \in \mathbb{N}_0{}^{d-1}$,

$$\mu^{(d)}(h) = m^{(d)}(h_2, \ldots, h_d) \qquad \textit{and} \qquad C^{(d)}(h) = g^{(d)}(h_2, \ldots, h_d).$$

Proof. (i) It follows from 16.2.1 that

$$C^{(i)}(h^{(i)}) = C^{(i-1)}(h^{(i-1)}) + \mu^{(i)}(h^{(i)})$$

for all $i = 2, \ldots, d$ and all $h \in \mathbb{N}_0{}^{d-1}$, and the claim follows from this.

(ii) We prove all the claims simultaneously by induction on d. Suitable $\beta_2^{(3)}, \beta_3^{(3)}, m^{(3)}, g^{(3)}$ have (essentially) been found in 16.3.1. We also take $m^{(2)} = g^{(2)} = X_2 \in \mathbb{Q}[X_2]$.

Suppose that $d > 3$ and make the obvious inductive assumptions. Observe that, for $h \in \mathbb{N}_0{}^{d-1}$, we have $\sigma^{(d)}(h) \in \mathbb{N}_0{}^{d-2}$ and $\sigma^{(d)}(h)^{(i)} = h^{(i)}$ for all $i = 2, \ldots, d-1$. Thus there exist polynomials $\beta_2^{(d-1)}, \ldots, \beta_{d-1}^{(d-1)} \in \mathbb{Q}[X_2, \ldots, X_{d-1}; Y]$ such that, for $i \in \{2, \ldots, d-1\}$ and all

$$(h; n) = (h_2, \ldots, h_d; n) \in \mathbb{N}_0{}^{d-1} \times \mathbb{Z}_{\geq -2}$$

with $C^{(i-1)}(h^{(i-1)}) - 2 \leq n \leq C^{(i)}(h^{(i)}) - 2$, we have

$$B^{(d-1)}(\sigma^{(d)}(h); n) = \beta_i^{(d-1)}(\sigma^{(d)}(h); n),$$

and, for all $i = 2, \ldots, d-1$, there exist rational polynomials $m^{(i)}, g^{(i)} \in \mathbb{Q}[X_2, \ldots, X_i]$ such that, for all $h = (h_2, \ldots, h_d) \in \mathbb{N}_0{}^{d-1}$, we have

$$\mu^{(i)}(h^{(i)}) = m^{(i)}(h^{(i)}) \qquad \text{and} \qquad C^{(i)}(h^{(i)}) = g^{(i)}(h^{(i)}).$$

It is convenient to extend the 'σ' notation of 16.2.1 as follows. For $i > 2$ and a general additively written commutative semigroup S, define $\sigma^{(i)} : S^{i-1} \longrightarrow S^{i-2}$ by

$$\sigma^{(i)}(s_2, \ldots, s_i) = (s_2 + s_3, \ldots, s_{i-1} + s_i) \text{ for all } (s_2, \ldots, s_i) \in S^{i-1},$$

and, for $s = (s_2, \ldots, s_d) \in S^{d-1}$, and each $j = 2, \ldots, d-1$, write

$$s^{(j)} := \sigma^{(j+1)} \circ \sigma^{(j+2)} \circ \ldots \circ \sigma^{(d)}(s).$$

We now use 16.3.2 to construct $\beta_2^{(d)},\dots,\beta_d^{(d)} \in \mathbb{Q}[X_2,\dots,X_d;Y]$ by an inductive process, during which we shall write $X = (X_2,\dots,X_d)$. Let $\beta_2^{(d)}$ be the unique polynomial in $\mathbb{Q}[X_2,\dots,X_d;Y]$ such that

$$\beta_2^{(d)}(X;Y) - \beta_2^{(d)}(X;Y-1) = \beta_2^{(d-1)}(\sigma^{(d)}(X);Y) \quad\text{and}\quad \beta_2^{(d)}(X;-2) = X_2;$$

then, for $i = 3,\dots,d-1$, let (successively) $\beta_i^{(d)}$ be the unique polynomial in $\mathbb{Q}[X_2,\dots,X_d;Y]$ such that

$$\beta_i^{(d)}(X;Y) - \beta_i^{(d)}(X;Y-1) = \beta_i^{(d-1)}(\sigma^{(d)}(X);Y)$$

and $\beta_i^{(d)}(X;g^{(i-1)}(X^{(i-1)})-2) = \beta_{i-1}^{(d)}(X;g^{(i-1)}(X^{(i-1)})-2)$; and, at the end, let $\beta_d^{(d)}$ be the unique polynomial in $\mathbb{Q}[X_2,\dots,X_d;Y]$ such that

$$\beta_d^{(d)}(X;Y) - \beta_d^{(d)}(X;Y-1) = -1$$

and $\beta_d^{(d)}(X;g^{(d-1)}(X^{(d-1)})-2) = \beta_{d-1}^{(d)}(X;g^{(d-1)}(X^{(d-1)})-2)$.

Now let $h = (h_2,\dots,h_d) \in \mathbb{N}_0{}^{d-1}$. Note that $\beta_2^{(d)}(h;-2) = h_2$. We make use of the inductive hypothesis to see that, for $C^{(1)}(h^{(1)})-2 \le n \le C^{(2)}(h^{(2)})-2$,

$$\begin{aligned} B^{(d)}(h;n) &= h_2 + \textstyle\sum_{j=-1}^{n} B^{(d-1)}(\sigma^{(d)}(h);j) \\ &= \beta_2^{(d)}(h;-2) + \textstyle\sum_{j=-1}^{n} \beta_2^{(d-1)}(\sigma^{(d)}(h);j) \\ &= \beta_2^{(d)}(h;-2) + \textstyle\sum_{j=-1}^{n} \left(\beta_2^{(d)}(h;j) - \beta_2^{(d)}(h;j-1)\right) \\ &= \beta_2^{(d)}(h;n), \end{aligned}$$

and it is equally easy to check that $\beta_3^{(d)},\dots,\beta_d^{(d)}$ also have the desired properties.

To complete the inductive step, and the proof, set

$$m^{(d)}(X) := \beta_{d-1}^{(d)}(X;g^{(d-1)}(X^{(d-1)})-2)$$

and $g^{(d)}(X) := m^{(d)}(X) + g^{(d-1)}(X^{(d-1)})$. Then, for $h = (h_2,\dots,h_d) \in \mathbb{N}_0{}^{d-1}$, and with the notation $q^{(d)}(h)$ of 16.2.1, we have

$$\begin{aligned} m^{(d)}(h) &= \beta_{d-1}^{(d)}(h;g^{(d-1)}(h^{(d-1)})-2) = \beta_{d-1}^{(d)}(h;C^{(d-1)}(h^{(d-1)})-2) \\ &= B^{(d)}(h;q^{(d)}(h)) = \mu^{(d)}(h), \end{aligned}$$

and

$$g^{(d)}(h) = m^{(d)}(h) + g^{(d-1)}(h^{(d-1)}) = \mu^{(d)}(h) + q^{(d)}(h) + 2 = C^{(d)}(h). \ \square$$

16.3.4 Exercise. Let the situation and notation be as in 16.3.3.

(i) Show that, for $d > 3$,

$$h_2 + \binom{\mu^{(d-1)}(h^{(d-1)})+1}{2} \le \mu^{(d)}(h)$$

and

$$\mu^{(d)}(h) \leq h_2 + \left(C^{(d-2)}(h^{(d-2)}) - 1\right) \mu^{(d-1)}(h^{(d-1)}) + \binom{\mu^{(d-1)}(h^{(d-1)}) + 1}{2}$$

for all $h = (h_2, \ldots, h_d) \in \mathbb{N}_0{}^{d-1}$.

(ii) Use part (i) to show that the polynomials $m^{(d)}, g^{(d)}$ of Theorem 16.3.3 both have degree 2^{d-2} and both have leading form

$$2\left(\frac{1}{2}\sum_{i=2}^{d}\binom{d-2}{i-2}X_i\right)^{2^{d-2}}.$$

16.4 Bounding systems for numerical invariants

16.4.1 Definition. Assume that $R = \bigoplus_{n\in\mathbb{N}_0} R_n$ is graded. Let $\mathscr{D}$ be a subclass of the class of all graded R-modules. By a *numerical invariant for R-modules in $\mathscr{D}$* (or *on $\mathscr{D}$*) we mean an assignment μ which, to each R-module M in $\mathscr{D}$, assigns $\mu(M) \in \mathbb{Z} \cup \{-\infty\}$, and which is such that $\mu(M) = \mu(N)$ whenever M and N are modules in $\mathscr{D}$ for which there is a homogeneous isomorphism $M \cong N$. We say that such a numerical invariant μ is *finite* if and only if μ takes only finite values.

Let $\mu_1, \ldots, \mu_s, \rho$ be numerical invariants for R-modules in $\mathscr{D}$, such that $\mu_1, \ldots, \mu_s$ are finite. We say that $\mu_1, \ldots, \mu_s$ form a *bounding system for ρ* (for R-modules in $\mathscr{D}$) (or on $\mathscr{D}$) if and only if there is a function $B : \mathbb{Z}^s \longrightarrow \mathbb{Z}$ such that

$$\rho(M) \leq B(\mu_1(M), \ldots, \mu_s(M))$$

for each R-module M in $\mathscr{D}$. Furthermore, we say that $\mu_1, \ldots, \mu_s$ form a *minimal* bounding system for ρ (for R-modules in $\mathscr{D}$) precisely when they form a bounding system for ρ on $\mathscr{D}$ but no $s-1$ of $\mu_1, \ldots, \mu_s$ form a bounding system for ρ on $\mathscr{D}$.

16.4.2 Remark. Assume that $R = \bigoplus_{n\in\mathbb{N}_0} R_n$ is positively graded and homogeneous, and that R_0 is Artinian. Let $d \in \mathbb{N}$ with $d > 1$. We use M to denote a finitely generated graded R-module.

Corollary 16.2.6 tells us that the numerical invariants

$$h^2_{(\bullet)}(-2), h^3_{(\bullet)}(-3), \ldots, h^d_{(\bullet)}(-d)$$

form a bounding system for the numerical invariant reg^2 for finitely generated graded R-modules of dimension not exceeding d.

The family $(h^i_M(-i))_{i=2}^{\dim M}$ is referred to as the *system of cohomological lengths of M in the diagonal at and above level* 2. (Of course, $h^i_M(-i) = 0$ for $i > \dim M$.) Thus, loosely speaking, the cohomological lengths in the diagonal at and above level 2 form a bounding system for the regularity at and above level 2 for finitely generated graded R-modules. In fact, bounds on $\operatorname{reg}^2(M)$ given by Corollary 16.2.6 are referred to as '*a priori* bounds of diagonal type'.

It should be noted that, for particular classes of finitely generated graded R-modules, it is sometimes possible to calculate bounds for the regularity at and above level 2 which are sharper than these *a priori* bounds.

16.4.3 Exercise. Let R_0 be a commutative Artinian ring, let $d \in \mathbb{N}$ with $d > 2$, and let $R := R_0[X_1, \ldots, X_d]$, the ring of polynomials over R_0, graded in the usual way.

Let $r \in \mathbb{N}$ be such that $1 \leq r \leq d-2$. Let $(i(1), \ldots, i(r)) \in \mathbb{N}^r$ with $2 \leq i(1) < i(2) < \ldots < i(r) \leq d$ and $(j(1), \ldots, j(d-1-r)) \in \mathbb{N}^{d-1-r}$ with $2 \leq j(1) < j(2) < \ldots < j(d-1-r) \leq d$ be such that

$$\{2, \ldots, d\} = \{i(1), \ldots, i(r), j(1), \ldots, j(d-1-r)\},$$

so that $\{i(1), \ldots, i(r)\} \cap \{j(1), \ldots, j(d-1-r)\} = \emptyset$. Let

$$\widetilde{M} := \bigoplus_{k=1}^{d-1-r} \left(R \Big/ \sum_{\nu=1}^{d-j(k)} RX_\nu \right),$$

a finitely generated graded R-module.

(i) For $n \in \mathbb{Z}$, calculate $h^{i(\alpha)}_{\widetilde{M}(n)}(-i(\alpha))$ for $\alpha = 1, \ldots, r$, and also calculate $\operatorname{reg}^2(\widetilde{M}(n))$.

(ii) Use part (i) to show that the numerical invariants

$$h^2_{(\bullet)}(-2), h^3_{(\bullet)}(-3), \ldots, h^d_{(\bullet)}(-d)$$

form a minimal bounding system (see 16.4.1) for reg^2 for finitely generated graded R-modules.

16.4.4 Exercise. Let R_0 be a commutative Artinian ring, let $d \in \mathbb{N}$ with $d > 1$, and let $R := R_0[X_1, \ldots, X_d]$, the ring of polynomials over R_0, graded in the usual way.

Consider, with the notation of 15.1.1, the graded R-module $R_{\geq n}$ for $n \in \mathbb{N}_0$. (In fact, $R_{\geq n} = (R_\perp)^n$ for all $n \in \mathbb{N}_0$.) Calculate $\operatorname{reg}^1(R_{\geq n})$, $\operatorname{reg}^2(R_{\geq n})$ and $h^i_{R_{\geq n}}(-i)$ for $i = 1, \ldots, d$. Conclude that the numerical invariants

$h^1_{(\bullet)}(-1), h^2_{(\bullet)}(-2), \ldots, h^d_{(\bullet)}(-d)$ do not form a bounding system for the regularity reg^1 at and above level 1 on the class of *all* finitely generated graded R-modules.

16.4.5 Exercise. Let K be an algebraically closed field, let $d \in \mathbb{N}$ with $d \geq 3$, and consider the projective curve $\Sigma_{(d)} \subseteq \mathbb{P}^3(K)$ of Exercise 14.2.5. Let $\mathfrak{p}_{(d)} := I_{\mathbb{P}^3(K)}(\Sigma_{(d)})$, that is, the kernel of the K-algebra homomorphism

$$\psi : R := K[Y_0, Y_1, Y_2, Y_3] \longrightarrow A_{(d)} = K[X^d, X^{d-1}Y, XY^{d-1}, Y^d]$$

for which $\psi(Y_0) = X^d$, $\psi(Y_1) = X^{d-1}Y$, $\psi(Y_2) = XY^{d-1}$ and $\psi(Y_3) = Y^d$.

(i) Show that $H^i_{R_\cdot}(A_{(d)}) = 0$ when $i = 0$ or $i > 2$.

(ii) Use 15.2.7 to calculate $\mathrm{reg}^2(\mathfrak{p}_{(d)})$.

(iii) Calculate $h^2_{\mathfrak{p}_{(d)}}(-2)$, $h^3_{\mathfrak{p}_{(d)}}(-3)$ and $h^4_{\mathfrak{p}_{(d)}}(-4)$.

(iv) Show that $h^3_{(\bullet)}(-3)$ forms a bounding system for reg^2 for the class (family actually) $(\mathfrak{p}_{(d)})_{d\geq 3}$, but that neither $h^2_{(\bullet)}(-2)$ nor $h^4_{(\bullet)}(-4)$ forms a bounding system for reg^2 for $(\mathfrak{p}_{(d)})_{d\geq 3}$.

16.4.6 Exercise. Let K be an algebraically closed field, let $r \in \mathbb{N}$ with $r \geq 3$, and let $V \subset \mathbb{P}^r(K)$ be a projective curve. Use the fact that $\mathrm{reg}^2(M) = \mathrm{reg}^2(M(t)) + t$ for a graded $\mathcal{O}(\mathrm{Cone}(V))$-module M and a $t \in \mathbb{Z}$ to see that

$$\mathrm{reg}(V) < C^{(r+1)}(0, h^2_{\mathcal{O}(\mathrm{Cone}(V))}(t-3), 0, \ldots, 0) + t \qquad \text{for } t = 1 \text{ or } 2,$$

where $C^{(r+1)}$ is as defined in 16.2.1.

Use this to obtain upper bounds for $\mathrm{reg}(\Sigma_{(d)})$, where $\Sigma_{(d)} \subseteq \mathbb{P}^3(K)$ is as in Exercise 16.4.5 above, and compare your upper bounds with the actual value of $\mathrm{reg}(\Sigma_{(d)})$.

17

Hilbert polynomials

At the beginning of Chapter 16, we explained why we are interested in bounding the regularity at and above level 2 of a non-zero graded prime ideal $\mathfrak{p}$ in the polynomial ring $K[X_0, \ldots, X_r]$ in $r+1$ indeterminates $X_0, \ldots, X_r$ (where $r \in \mathbb{N}$) over an algebraically closed field K: when $\mathfrak{p} = I_{\mathbb{P}^r(K)}(V)$, the vanishing ideal of a projective variety $V \subset \mathbb{P}^r(K)$, then $\operatorname{reg}^2(\mathfrak{p})$ provides an upper bound on the degrees of homogeneous polynomials needed to define V.

Suppose that $R = \bigoplus_{n \in \mathbb{N}_0} R_n$ is positively graded and R_0 is an Artinian ring. In Chapter 16, we were concerned with *a priori* bounds of diagonal type for reg^2, and the bounds we obtained are always available for finitely generated graded R-modules. In this chapter, we are going to establish, in the particular case when R is a polynomial ring over R_0 and R_0 is local, a bound on this regularity which applies to all graded submodules of a given finitely generated graded free R-module; the bound is expressed in terms of numerical invariants defined by means of the characteristic function of such a module.

In more detail, let M be a non-zero finitely generated graded R-module of dimension d. It turns out that, for each $i \in \mathbb{N}_0$ and $n \in \mathbb{Z}$, the n-th component $\mathscr{R}^i D_{R_+}(M)_n$ of $\mathscr{R}^i D_{R_+}(M)$ has finite length as an R_0-module, and we denote this length by $d^i_M(n)$; it makes sense for us to define the *characteristic function* $\chi_M : \mathbb{Z} \longrightarrow \mathbb{Z}$ *of* M by setting

$$\chi_M(n) = \sum_{i \in \mathbb{N}_0} (-1)^i d^i_M(n) \qquad \text{for all } n \in \mathbb{Z}.$$

We shall see in 17.1.6 that there is a polynomial $P_M \in \mathbb{Q}[X]$ of degree $d-1$ such that $P_M(n) = \chi_M(n)$ for all $n \in \mathbb{Z}$; it follows that there are integers $e_0(M), \ldots, e_{d-1}(M)$ such that, in $\mathbb{Q}[X]$,

$$P_M(X) = \sum_{i=0}^{d-1} (-1)^i e_i(M) \binom{X+d-i-1}{d-i-1}.$$

The main result of this chapter is a ring-theoretic formulation of a classical result of D. Mumford on sheaves of ideals on projective spaces. One consequence of it is that, over the polynomial ring $K[X_0, \ldots, X_r]$ discussed in the first paragraph of this introduction, the numerical invariants $e_0(\cdot), \ldots, e_r(\cdot)$ form a bounding system for reg^2 for non-zero graded ideals of $K[X_0, \ldots, X_r]$.

17.1 The characteristic function

17.1.1 Reminders, Notation and Terminology. We shall use notation and terminology employed by Bruns and Herzog in [6, §4.1]. Consider a function $f : \mathbb{Z} \longrightarrow \mathbb{Z}$.

(i) We say that f is *of polynomial type (of degree d)* if and only if there exists a polynomial $p \in \mathbb{Q}[X]$ (of degree d) such that $f(n) = p(n)$ for all $n >> 0$ (that is, for all n greater than some fixed constant integer n_0). (When this is the case, the polynomial p will be uniquely determined, of course, since two rational polynomials which take the same values at infinitely many integers must coincide. Our convention is that the zero polynomial has degree -1.)

(ii) We define $\Delta f : \mathbb{Z} \longrightarrow \mathbb{Z}$ by $\Delta f(n) = f(n+1) - f(n)$ for all $n \in \mathbb{Z}$. Thus Δ is a mapping from the set of functions from $\mathbb{Z}$ to $\mathbb{Z}$ to itself. For $n \in \mathbb{N}$, we use Δ^n to denote the result of repeating Δ n times; we also write $\Delta^0 f = f$.

(iii) Let $d \in \mathbb{N}_0$. Recall from [6, Lemma 4.1.2] that f is of polynomial type of degree d if and only if there exists $c \in \mathbb{Z}$ with $c \neq 0$ such that $\Delta^d f(n) = c$ for all $n >> 0$.

(iv) Recall that, for $i \in \mathbb{N}$,

$$\binom{X+i}{i} := \frac{(X+i)(X+i-1)\ldots(X+1)}{1.2.3.\ldots.i} \in \mathbb{Q}[X],$$

and that $\binom{X+0}{0}$ denotes the constant polynomial $1 \in \mathbb{Q}[X]$.

(v) Let $d \in \mathbb{N}$. Let $P \in \mathbb{Q}[X]$ be a non-zero polynomial of degree $d-1$. Recall from [6, Lemma 4.1.4] that $P(n) \in \mathbb{Z}$ for all $n \in \mathbb{Z}$ if and only if there exist integers $e_0, \ldots, e_{d-1}$ such that

$$P(X) = \sum_{i=0}^{d-1} (-1)^i e_i \binom{X+d-i-1}{d-i-1}.$$

When this is the case, we say that P is a *numerical polynomial*; also, the integers $e_0, \ldots, e_{d-1}$ are uniquely determined by P, and we denote them by $e_0(P), \ldots, e_{d-1}(P)$.

Also, given $c := (c_0, \ldots, c_{d-1}) \in \mathbb{Z}^d$, we shall denote by $p_c = p_{(c_0,\ldots,c_{d-1})}$ the polynomial in $\mathbb{Q}[X]$ given by

$$p_c(X) = \sum_{i=0}^{d-1} (-1)^i c_i \binom{X+d-i-1}{d-i-1}.$$

Note that, when $d > 1$, we have

$$\begin{aligned} p_c(X) - p_c(X-1) &= \sum_{i=0}^{d-1} (-1)^i c_i \left(\binom{X+d-i-1}{d-i-1} - \binom{(X-1)+d-i-1}{d-i-1} \right) \\ &= \sum_{i=0}^{d-2} (-1)^i c_i \binom{X+d-i-2}{d-i-2} \\ &= p_{(c_0,\ldots,c_{d-2})}(X). \end{aligned}$$

(vi) We shall say that f is *of reverse polynomial type (of degree d)* if and only if there exists a polynomial $p \in \mathbb{Q}[X]$ (of degree d) such that $f(n) = p(n)$ for all $n << 0$ (that is, for all n less than some fixed constant integer n_0'). Thus f is of reverse polynomial type of degree d if and only if the function $g : \mathbb{Z} \longrightarrow \mathbb{Z}$ defined by $g(n) = f(-n)$ for all $n \in \mathbb{Z}$ is of polynomial type of degree d in the sense of (i).

17.1.2 ♯Exercise. Let $P \in \mathbb{Q}[X]$ be a non-zero polynomial of degree $d-1$. Assume that P takes integer values at d consecutive integers. Show that $P(n) \in \mathbb{Z}$ for *all* $n \in \mathbb{Z}$.

17.1.3 ♯Exercise. Suppose that the function $f : \mathbb{Z} \longrightarrow \mathbb{Z}$ is such that there exists $Q \in \mathbb{Q}[X]$ for which $\Delta f(n) = Q(n)$ for all $n \in \mathbb{Z}$. By using, for various values of the integer n_0, the fact that

$$f(n) = f(n_0) + \sum_{i=n_0}^{n-1} Q(i) \qquad \text{for all } n \geq n_0,$$

show that there exists $P \in \mathbb{Q}[X]$ such that $f(n) = P(n)$ for all $n \in \mathbb{Z}$.

17.1.4 Further Notation and Terminology. Assume $R = \bigoplus_{n \in \mathbb{N}_0} R_n$ is positively graded and homogeneous and such that R_0 is an Artinian ring, and let $M = \bigoplus_{n \in \mathbb{Z}} M_n$ be a finitely generated graded R-module. In this situation, it follows from 15.1.6(ii) that the R_0-module $D_{R_+}(M)_n$ has finite length, for all $n \in \mathbb{Z}$. Let $i \in \mathbb{N}$. For $n \in \mathbb{Z}$, we denote the n-th component of $\mathscr{R}^i D_{R_+}(M)$ by $\mathscr{R}^i D_{R_+}(M)_n$;

by 12.4.5(ii), this R_0-module is isomorphic to $H^{i+1}_{R_+}(M)_n$, and so (by 15.1.5) has finite length.

We denote $\ell_{R_0}(\mathscr{H}^i D_{R_+}(M)_n)$ by $d^i_M(n)$, for all $i \in \mathbb{N}_0$ and all $n \in \mathbb{Z}$. Note that $d^i_M(n) = h^{i-1}_M(n)$ for $i > 0$, and that this is zero for $i \geq \max\{1, \dim M\}$. It therefore makes sense for us to define the *characteristic function* $\chi_M : \mathbb{Z} \longrightarrow \mathbb{Z}$ *of* M by setting

$$\chi_M(n) = \sum_{i \in \mathbb{N}_0} (-1)^i d^i_M(n) \qquad \text{for all } n \in \mathbb{Z}.$$

Note that, for all $n \in \mathbb{Z}$, we have $d^0_M(n) = \ell_{R_0}(M_n) + h^1_M(n) - h^0_M(n)$ by 12.4.2, so that, for any integer $d \geq \dim M$,

$$\begin{aligned}\chi_M(n) &= \sum_{i=0}^{d} (-1)^i d^i_M(n) = d^0_M(n) - \sum_{i=2}^{d} (-1)^i h^i_M(n) \\ &= \ell_{R_0}(M_n) - \sum_{i=0}^{d} (-1)^i h^i_M(n).\end{aligned}$$

It therefore follows from 15.1.5 that $\chi_M(n) = \ell_{R_0}(M_n) \geq 0$ for all $n >> 0$.

Note also that, by 13.1.9(ii), we have $\chi_{M(t)}(n) = \chi_M(t+n)$ for all $t, n \in \mathbb{Z}$.

17.1.5 ‡Exercise. Assume that $R = \bigoplus_{n \in \mathbb{N}_0} R_n$ is positively graded and homogeneous and such that R_0 is an Artinian ring. Let

$$0 \longrightarrow L \longrightarrow M \longrightarrow N \longrightarrow 0$$

be an exact sequence of finitely generated graded R-modules and homogeneous homomorphisms. Show that, for each $n \in \mathbb{Z}$, we have

$$\chi_M(n) = \chi_L(n) + \chi_N(n).$$

17.1.6 Theorem. *Assume that* $R = \bigoplus_{n \in \mathbb{N}_0} R_n$ *is positively graded and homogeneous, and such that* R_0 *is Artinian; let* M *be a non-zero finitely generated graded* R*-module. Then there is a (necessarily uniquely determined) polynomial* $P_M \in \mathbb{Q}[X]$ *of degree* $\dim M - 1$ *such that* $P_M(n) = \chi_M(n)$ *for all* $n \in \mathbb{Z}$.

Proof. It follows from 16.2.5 (and the fact that $\chi_M(n) \geq 0$ for all $n >> 0$) that it is sufficient for us to prove this result under the additional assumption that the Artinian ring R_0 is local. We make this assumption in what follows, and we let $\mathfrak{m}_0$ be the maximal ideal of R_0.

We now use 15.2.4 and 15.2.2(vi) to reduce to the case where the residue field of R_0 is infinite. We therefore assume that $R_0/\mathfrak{m}_0$ is infinite for the remainder of this proof.

We now argue by induction on $\dim M$. Consider first the case when $\dim M = 0$. Then $\operatorname{Ass} M = \{\mathfrak{m}_0 \oplus R_+\}$, so that there exists $t \in \mathbb{N}$ such that $(R_+)^t M = 0$. In this case, $M = \Gamma_{R_+}(M)$ and so $H^i_{R_+}(M) = 0$ for all $i \in \mathbb{N}$, by 2.1.7(ii), and $D_{R_+}(M) = 0$ by 2.2.8(i). Thus $\chi_M(n) = 0$ for all $n \in \mathbb{Z}$, and our claim is proved in this case.

Now suppose that $\dim M > 0$ and our desired result has been proved for all non-zero, finitely generated graded R-modules of smaller dimension. Since $\Gamma_{R_+}(M)$ is a graded submodule of M, it follows from 2.1.7(iii) that, for each $i \in \mathbb{N}$, there is a (homogeneous) isomorphism $H^i_{R_+}(M) \cong H^i_{R_+}(M/\Gamma_{R_+}(M))$, and from 2.2.8(ii) that there is a (homogeneous) isomorphism $D_{R_+}(M) \cong D_{R_+}(M/\Gamma_{R_+}(M))$. Hence $\chi_M = \chi_{M/\Gamma_{R_+}(M)}$. Since $\Gamma_{R_+}(M)$ is annihilated by some power of R_+, it follows that

$$\operatorname{Supp}(\Gamma_{R_+}(M)) \subseteq \{\mathfrak{m}_0 \oplus R_+\},$$

so that $\dim M = \dim(M/\Gamma_{R_+}(M))$. Hence, for the purpose of this inductive step, we can replace M by $M/\Gamma_{R_+}(M)$ and so (in view of 2.1.2, 2.1.1 and 15.1.4(ii)) assume that M is R_+-torsion-free and that R_1 contains a non-zerodivisor a on M. This we do.

Application of 17.1.5 to the exact sequence

$$0 \longrightarrow M(-1) \xrightarrow{a} M \longrightarrow M/aM \longrightarrow 0$$

of graded R-modules and homogeneous homomorphisms, together with the observation that $\chi_{M(-1)}(n) = \chi_M(n-1)$ for all $n \in \mathbb{Z}$, yields that

$$\chi_M(n) - \chi_M(n-1) = \chi_{M/aM}(n) \qquad \text{for all } n \in \mathbb{Z}.$$

Now $\dim M/aM = \dim M - 1$ (by 13.1.14), and so it follows from the inductive hypothesis that there is a polynomial $P_{M/aM} \in \mathbb{Q}[X]$ of degree $\dim M - 2$ such that $P_{M/aM}(n) = \chi_{M/aM}(n)$ for all $n \in \mathbb{Z}$. Hence, by 17.1.3, there exists a polynomial $P_M \in \mathbb{Q}[X]$ such that $P_M(n) = \chi_M(n)$ for all $n \in \mathbb{Z}$. Furthermore, if $P_{M/aM} \neq 0$, then P_M must have degree $\dim M - 1$. However, if $P_{M/aM} = 0$ (and this would be the case if $\dim M$ were 1), then the above argument shows only that $\deg P_M \leq 0$, and we must show that $\chi_M(n) \neq 0$ for some $n \in \mathbb{Z}$ in order to complete the inductive step.

The assumption that $P_{M/aM} = 0$, in conjunction with the inductive hypothesis, implies that $\dim M = 1$. Hence $H^i_{R_+}(M) = 0$ for all $i > 1$, and so $\chi_M(n) = d^0_M(n)$ for all $n \in \mathbb{Z}$. However, the fact that $\Gamma_{R_+}(M) = 0$ ensures that the map $\eta_M : M \longrightarrow D_{R_+}(M)$ of 2.2.4(i) is a monomorphism, so that $D_{R_+}(M) \neq 0$ and $d^0_M(n) \neq 0$ for some $n \in \mathbb{Z}$. □

17.1.7 Remark. Assume that $R = \bigoplus_{n \in \mathbb{N}_0} R_n$ is positively graded and homoge-

neous, and such that R_0 is Artinian; let $M = \bigoplus_{n\in\mathbb{Z}} M_n$ be a non-zero finitely generated graded R-module of dimension d.

It was pointed out in 17.1.4 that $\chi_M(n) = \ell_{R_0}(M_n)$ for all $n >> 0$. Thus Hilbert's Theorem (see [6, Theorem 4.1.3]), that the function

$$\ell_{R_0}(M_{(\bullet)}) : \mathbb{Z} \longrightarrow \mathbb{Z}$$

is of polynomial type of degree $d-1$, is a corollary of Theorem 17.1.6, and the polynomial P_M of that theorem is just the *Hilbert polynomial of* M of [6, 4.1.5].

With the notation of 17.1.1(v), for each $j = 0, \ldots, d-1$, we set $e_j(M) := e_j(P_M)$ and refer to this as the *j-th Hilbert coefficient of* M. Note that, in the terminology of [6, 4.1.5], the integer $e_0(M)$ is the *multiplicity of* M if $d > 0$.

To sum up, we can write

$$P_M(X) = \sum_{i=0}^{d-1} (-1)^i e_i(M) \binom{X+d-i-1}{d-i-1}$$

and

$$\chi_M(n) = \sum_{i=0}^{d-1} (-1)^i e_i(M) \binom{n+d-i-1}{d-i-1} \qquad \text{for all } n \in \mathbb{Z}.$$

17.1.8 ♯Exercise. Assume that $R = \bigoplus_{n\in\mathbb{N}_0} R_n$ is positively graded and homogeneous, and such that R_0 is Artinian; let M be a non-zero finitely generated graded R-module of dimension d. Suppose that $a \in R_1$ is a non-zerodivisor on M. Show that

(i) $P_{M/aM}(X) = P_M(X) - P_M(X-1)$; and

(ii) if $d > 1$, then, with the notation of 17.1.1(v),

$$P_{M/aM}(X) = p_{(e_0(M),\ldots,e_{d-2}(M))}(X),$$

and $e_i(M/aM) = e_i(M)$ for all $i = 0, \ldots, d-2$.

17.1.9 Theorem and Definition. *Assume that $R = \bigoplus_{n\in\mathbb{N}_0} R_n$ is positively graded and homogeneous, and such that R_0 is Artinian; let M be a finitely generated graded R-module. Let $i \in \mathbb{N}_0$. Then the function $h^i_M : \mathbb{Z} \longrightarrow \mathbb{N}_0$ (see 16.1.1) is of reverse polynomial type of degree less than i (in the sense of* 17.1.1(vi)*); in other words, there is a polynomial $p^i_M \in \mathbb{Q}[X]$ of degree less than i such that*

$$\ell_{R_0}(H^i_{R_+}(M)_n) = p^i_M(n) \qquad \textit{for all } n << 0.$$

The function h^i_M is called the i-th cohomological Hilbert function of M, *while the (uniquely determined) polynomial p^i_M is called the* i-th cohomological Hilbert polynomial of M.

Proof. By 16.2.5, it is sufficient for us to prove the result under the additional hypothesis that R_0 is local. We therefore assume for the remainder of this proof that R_0 is an Artinian local ring, with maximal ideal $\mathfrak{m}_0$, say. With this assumption, R is *local, and $\sqrt{R_+} = \mathfrak{m}_0 + R_+ =: \mathfrak{m}$, the unique *maximal ideal of R.

Since $(R_0, \mathfrak{m}_0)$ is a complete local ring, we can use Cohen's Structure Theorem for such rings (see [35, Theorem 29.4(ii)], for example) in conjunction with standard facts about the structure of positively graded homogeneous commutative Noetherian rings (see [6, Proposition 1.5.4]) to see that there is a Gorenstein graded *local commutative Noetherian ring R' and a surjective homogeneous ring homomorphism $f : R' \longrightarrow R$. Let $d' := \dim R'$.

We are going to use the Graded Local Duality Theorem 13.4.3. Let $^*D$ denote the functor $^*\operatorname{Hom}_R(\,\cdot\,, {}^*E(R/\mathfrak{m}))$ from $^*\mathscr{C}(R)$ to itself. By 13.4.3, there exists $a' \in \mathbb{Z}$ such that there is a natural transformation

$$\psi^i : H^i_{R_+} \longrightarrow {}^*D(^*\operatorname{Ext}^{d'-i}_{R'}(\,\cdot\,, R'(a')))$$

of covariant functors from $^*\mathscr{C}(R)$ to $^*\mathscr{C}(R)$ which is such that $\psi^i_{M'}$ is a (necessarily homogeneous) isomorphism for all $i \in \mathbb{N}_0$ whenever M' is a finitely generated graded R-module.

Let $N = {}^*\operatorname{Ext}^{d'-i}_{R'}(M, R'(a'))$, a finitely generated graded R-module. We now use Graded Matlis Duality 13.4.5. We use the notation $(\,\cdot\,)^\vee$ of 13.4.5 to denote the functor $^*\operatorname{Hom}_{R_0}(\,\cdot\,, E_{R_0}(R_0/\mathfrak{m}_0))$ from $^*\mathscr{C}(R)$ to itself. It follows from 13.4.5 that, for each $n \in \mathbb{Z}$ (and with an obvious notation), there are R_0-isomorphisms

$$\begin{aligned} H^i_{R_+}(M)_n &\cong (^*D(N))_n \cong (N^\vee)_n \\ &\cong (^*\operatorname{Hom}_{R_0}(N, E_{R_0}(R_0/\mathfrak{m}_0)))_n \\ &= \operatorname{Hom}_{R_0}(N_{-n}, E_{R_0}(R_0/\mathfrak{m}_0)), \end{aligned}$$

so that $h^i_M(n) = \ell_{R_0}(\operatorname{Hom}_{R_0}(N_{-n}, E_{R_0}(R_0/\mathfrak{m}_0))) = \ell_{R_0}(N_{-n})$ by 10.2.13. Thus, in order to prove that h^i_M is of reverse polynomial type of degree less than i, it is now sufficient for us to prove that the function $\ell_{R_0}(N_{(\,\cdot\,)}) : \mathbb{Z} \longrightarrow \mathbb{N}_0$ is of polynomial type of degree less than i; hence, by Hilbert's Theorem (see 17.1.7 above and [6, Theorem 4.1.3]), it is enough for us to prove that $\dim N \leq i$.

To do this, let $\mathfrak{p}' \in \operatorname{Supp}_{R'}(N)$. Then $\operatorname{Ext}^{d'-i}_{R'_{\mathfrak{p}'}}(M_{\mathfrak{p}'}, R'_{\mathfrak{p}'}) \neq 0$, so that, since $\operatorname{inj\,dim}_{R'_{\mathfrak{p}'}} R'_{\mathfrak{p}'} = \operatorname{ht} \mathfrak{p}'$, we must have $\operatorname{ht} \mathfrak{p}' \geq d' - i$. Therefore $\dim R'/\mathfrak{p}' \leq i$, so that $\dim_R N \leq i$. □

17.1.10 ♯Exercise. Let the situation be as in 17.1.9, and let M be a non-zero finitely generated graded R-module of dimension d. Show that the d-th cohomological Hilbert polynomial p^d_M of M has degree exactly $d - 1$.

17.1.11 Exercise. Assume that $R = \bigoplus_{n \in \mathbb{N}_0} R_n$ is positively graded and homogeneous, and such that R_0 is Artinian; let M be a non-zero finitely generated graded R-module of positive dimension. This exercise involves the finiteness dimension $f_{R_+}(M)$ of M relative to R_+ of 9.1.3, and, for $r \in \mathbb{N}$ and $s \in \mathbb{Z}$, the notation $(\,\cdot\,)^{(r,s)} : {}^*\mathscr{C}(R) \longrightarrow {}^*\mathscr{C}(R^{(r)})$ of 12.4.6 for the (r,s)-th Veronesean functor.

(i) Show that $f_{R_+}(M)$ is finite.

(ii) Show that $f_{R_+}(M) = \max\left\{\operatorname{grade}_{M^{(r,s)}}((R^{(r)})_\perp) : r \in \mathbb{N},\ s \in \mathbb{Z}\right\}$.

17.2 Bounds in terms of Hilbert coefficients

We now begin to examine situations where Hilbert coefficients form a bounding system for reg^2 on appropriate classes of graded modules over a polynomial ring $R_0[X_1, \ldots, X_n]$ over an Artinian local ring R_0. The following exercise shows that, in general, the Hilbert coefficients do not form a bounding system for reg^2 on the class of *all* finitely generated graded $R_0[X_1, \ldots, X_n]$-modules.

17.2.1 Exercise. Suppose that $R = R_0[X_1, X_2]$ is a polynomial ring in 2 indeterminates X_1, X_2 over an Artinian ring R_0.

For each $t \in \mathbb{N}_0$, set $M^{(t)} := R(t) \oplus R(-t)$, and calculate $e_0(M^{(t)})$, $e_1(M^{(t)})$, $\operatorname{reg}^2(M^{(t)})$. Conclude that the numerical invariants $e_0(\,\cdot\,), e_1(\,\cdot\,)$ do not form a bounding system for reg^2 on the class of *all* finitely generated graded R-modules.

17.2.2 Notation and Remark. For $(n, i) \in \mathbb{Z} \times \mathbb{N}_0$, we set

$$\binom{n}{i}^+ := \begin{cases} \binom{n}{i} & \text{if} \quad n \geq i, \\ 0 & \text{if} \quad n < i. \end{cases}$$

This notation is helpful in the following situation. Suppose that $R = R_0[X_1, \ldots, X_d]$ is a polynomial ring in d (> 0) indeterminates $X_1, \ldots, X_d$ over an Artinian ring R_0, graded in the usual way, and let $a \in \mathbb{Z}$. Then, for all $n \in \mathbb{Z}$, the n-th component $R(a)_n$ of the graded R-module $R(a)$ has length as an R_0-module given by

$$\ell_{R_0}(R(a)_n) = \ell_{R_0}(R_0)\binom{n + a + d - 1}{d - 1}^+.$$

17.2.3 Lemma. *Suppose that $R = R_0[X_1, \ldots, X_d]$ is a polynomial ring in $d > 1$ indeterminates $X_1, \ldots, X_d$ over an Artinian ring R_0, graded in the usual way. Let*

$r \in \mathbb{N}$ and let $a_1, \ldots, a_r \in \mathbb{Z}$. Let M be a graded submodule of $\bigoplus_{i=1}^r R(a_i)$, and let f be an integer such that $f \geq \operatorname{reg}^2(M/X_dM)$. Then

$$\operatorname{reg}^2(M) \leq \ell_{R_0}(R_0) \sum_{i=1}^{r} \binom{f + a_i + d - 3}{d-1}^{+} - \chi_M(f-2) + f.$$

Proof. Note that X_d is a non-zerodivisor on M, because M is a submodule of $G := \bigoplus_{i=1}^r R(a_i)$. Let $i, n \in \mathbb{Z}$ be such that $i > 2$ and $n > f - i$. Since $f \geq \operatorname{reg}^2(M/X_dM) \geq \operatorname{end} H_{R_-}^{i-1}(M/X_dM) + i - 1$, it follows that $H_{R_+}^{i-1}(M/X_dM)_{n+1} = 0$. Therefore, the exact sequence

$$0 \longrightarrow M(-1) \xrightarrow{X_d} M \longrightarrow (M/X_dM) \longrightarrow 0$$

of graded R-modules and homogeneous homomorphisms induces an exact sequence

$$0 \longrightarrow H_{R_+}^i(M)_n \xrightarrow{X_d} H_{R_-}^i(M)_{n+1}$$

of R_0-modules. Hence $H_{R_+}^i(M)_n = 0$ for all $i > 2$ and $n > f - i$. Thus, by Definition 17.1.4,

$$\chi_M(f-2) = d_M^0(f-2) - h_M^2(f-2),$$

so that $h_M^2(f-2) = d_M^0(f-2) - \chi_M(f-2)$.

We are now going to use Lemma 16.1.4 with $n_0 = f - 2$ and $q = f - 1$. Observe that, with the notation of that lemma, $h_{M/X_dM}^2(m) = 0$ for all $m > n_0 = f - 2$, so that $s(n) = h_M^2(f-2)$ for all $n \geq n_0$. It follows from 16.1.4 that $h_M^2(n) \leq \max\{0, h_M^2(f-2) + f - 1 - n\}$ for all $n \geq f - 1$. Hence $h_M^2(n) = 0$ for all $n > h_M^2(f-2) + f - 2$. As we know already that $h_M^i(n) = 0$ for all $i > 2$ and $n > f - i$, it follows that

$$\operatorname{reg}^2(M) \leq h_M^2(f-2) + f = d_M^0(f-2) - \chi_M(f-2) + f.$$

As $\operatorname{grade}_G R_+ = d > 1$, it follows from 6.2.7, 2.2.4(i)(c) and 12.2.10 that $\eta_{R_-} : G \longrightarrow D_{R_+}(G)$ is a homogeneous isomorphism. It therefore follows from the fact that the functor D_{R_+} is left exact that there is a homogeneous monomorphism $D_{R_+}(M) \longrightarrow G$; we thus deduce, on use of 17.2.2, that (with an obvious notation)

$$d_M^0(f-2) \leq \ell_{R_0}(G_{f-2}) = \ell_{R_0}(R_0) \sum_{i=1}^{r} \binom{f - 2 + a_i + d - 1}{d-1}^{+}.$$

The claim now follows. □

17.2.4 Notation. Let R_0 be a commutative Artinian ring. We are now going to define, for each integer $d > 1$, each $r \in \mathbb{N}$ and each r-tuple $a := (a_1, \ldots, a_r) \in \mathbb{Z}^r$, a numerical function $F_a^{(d)} : \mathbb{Z}^d \longrightarrow \mathbb{Z}$. The definition will be made by induction on d.

First, for $(e_0, e_1) \in \mathbb{Z}^2$, we set $s := \min\{-a_i : 1 \leq i \leq r\}$ and define (with the notation of 17.1.1(v))

$$F_a^{(2)}(e_0, e_1) = s + 1 - p_{(e_0,e_1)}(s-1).$$

Now suppose that $d > 2$ and that the function $F_a^{(d-1)}$ has already been defined. Then, for $e := (e_0, \ldots, e_{d-1}) \in \mathbb{Z}^d$ and with $e' := (e_0, \ldots, e_{d-2}) \in \mathbb{Z}^{d-1}$, we write $f = F_a^{(d-1)}(e')$ and set (again with the notation of 17.1.1(v))

$$F_a^{(d)}(e) := \ell_{R_0}(R_0) \sum_{i=1}^{r} \binom{f + a_i + d - 3}{d-1}^{+} - p_e(f-2) + f.$$

Finally, for the sake of completeness, we set $F_a^{(1)}(e_0) = -\infty$ for all $e_0 \in \mathbb{Z}$.

17.2.5 Exercise. Let the situation be as in 17.2.4, but denote $\ell_{R_0}(R_0)$ by λ. Show that, for $(e_0, e_1, e_2) \in \mathbb{Z}^3$ (and $0 := (0, \ldots, 0) \in \mathbb{Z}^r$), we have $F_0^{(2)}(e_0, e_1) = 1 + e_1$ and

$$F_0^{(3)}(e_0, e_1, e_2) = \begin{cases} \frac{1}{2}(r\lambda(1+e_1)e_1 - e_1^2 e_0 - e_1 e_0 + 2e_1^2 - 2e_2 + 2e_1 + 2) & \text{if } e_1 \geq 1, \\ -\frac{1}{2}(e_1^2 e_0 + e_1 e_0 - 2e_1^2 + 2e_2 - 2e_1 - 2) & \text{if } e_1 < 1. \end{cases}$$

Our next theorem is the main result of this chapter. We need one preliminary lemma.

17.2.6 Lemma. *Suppose that $R = R_0[X_1, \ldots, X_d]$ is a polynomial ring in d indeterminates $X_1, \ldots, X_d$ over an Artinian local ring $(R_0, \mathfrak{m}_0)$, where $d \in \mathbb{N}$. Regard $R = \bigoplus_{n \in \mathbb{N}_0} R_n$ as graded in the usual way.*

Let M be a non-zero finitely generated graded R-module, and suppose that there exists $a \in R_1$ which is a non-zerodivisor on M. Then there exist $X_1', \ldots, X_d' \in R_1$ such that X_d' is a non-zerodivisor on M, the family $(X_i')_{i=1}^d$ is algebraically independent over R_0, and $R = R_0[X_1', \ldots, X_d']$.

Proof. We have $a = b_1 X_1 + \ldots + b_d X_d$ for some $b_1, \ldots, b_d \in R_0$. Now $\mathfrak{m}_0$ is nilpotent, and so there exists $j \in \{1, \ldots, d\}$ such that $b_j \notin \mathfrak{m}_0$. Hence b_j is a unit of R_0, and so, after multiplication by b_j^{-1}, we can (and do) assume that $b_j = 1$. Let $c := a - X_j \in R_1$.

There is a homogeneous R_0-algebra homomorphism $\phi : R \longrightarrow R$ for which $\phi(X_j) = X_j + c = a$ and $\phi(X_i) = X_i$ for all $i = 1, \ldots, d$ with $i \neq j$. Similarly, there is a homogeneous R_0-algebra homomorphism $\psi : R \longrightarrow R$ for which $\psi(X_j) = X_j - c$ and $\psi(X_i) = X_i$ for all $i = 1, \ldots, d$ with $i \neq j$. Since $\phi(c) = \psi(c) = c$, it follows that ϕ and ψ are inverse isomorphisms. If we now take $X'_j = a = X_j + c$ and $X'_i = X_i$ for all $i = 1, \ldots, d$ with $i \neq j$, then $(X'_i)_{i=1}^d$ is algebraically independent over R_0 and $R = R_0[X'_1, \ldots, X'_d]$; since X'_j is a non-zerodivisor on M, we can now reorder the X'_i (if necessary) to complete the proof. □

17.2.7 Theorem. *Suppose that $R = R_0[X_1, \ldots, X_d]$ is a polynomial ring in d indeterminates $X_1, \ldots, X_d$ over an Artinian local ring $(R_0, \mathfrak{m}_0)$, where $d \in \mathbb{N}$. Regard $R = \bigoplus_{n \in \mathbb{N}_0} R_n$ as graded in the usual way. Let $r \in \mathbb{N}$ and let $a := (a_1, \ldots, a_r) \in \mathbb{Z}^r$. Let M be a non-zero graded submodule of $\bigoplus_{i=1}^r R(a_i)$. Then, with the notation of* 17.2.4,

$$\operatorname{reg}^2(M) \leq F_a^{(d)}(e_0(M), \ldots, e_{d-1}(M)).$$

Proof. When $d = 1$, we have $\dim M = 1$, so that $H^i_{R_+}(M) = 0$ for all $i > 1$ and $\operatorname{reg}^2(M) = -\infty$. We therefore assume henceforth in this proof that $d > 1$. As in the proof of Theorems 17.1.6 and 16.2.4, we can use the ideas of Example 15.2.4 to show that it is enough for us to prove the theorem under the additional assumption that $R_0/\mathfrak{m}_0$ is infinite, and we shall make this assumption in what follows. We shall prove the result by induction on d. We shall make frequent use of the fact that, as each associated prime $\mathfrak{p}$ of a free R-module has $\dim R/\mathfrak{p} = d$, every non-zero submodule of a free R-module has dimension d.

First, consider the case where $d = 2$. Then $\dim M/X_2M < 2$, and so $\operatorname{reg}^2(M/X_2M) = -\infty$. Set $s := \min\{-a_j : 1 \leq j \leq r\}$ and use Lemma 17.2.3 with the choice $f = s + 1$: since $f + a_i + d - 3 = s + a_i + d - 2 \leq d - 2 < d - 1$ for each $i = 1, \ldots, r$, we obtain that

$$\begin{aligned}
\operatorname{reg}^2(M) &\leq \ell_{R_0}(R_0) \sum_{i=1}^r \binom{s + a_i + d - 2}{d - 1}^+ - \chi_M(s - 1) + s + 1 \\
&= s + 1 - P_M(s - 1) = s + 1 - p_{(e_0(M), e_1(M))}(s - 1) \\
&= F_a^{(2)}(e_0(M), e_1(M)).
\end{aligned}$$

Now suppose that $d > 2$ and our desired result has been proved for smaller values of d. Set $G := \bigoplus_{i=1}^r R(a_i)$. As $\operatorname{grade}_G R_+ = d > 1$, it follows from 6.2.7, 2.2.4(i)(c) and 12.2.10 that $\eta_{R_+} : G \longrightarrow D_{R_+}(G)$ is a homogeneous isomorphism. It therefore follows from the fact that the functor D_{R_+} is left exact that there is a homogeneous monomorphism $\varepsilon : D_{R_+}(M) \longrightarrow G$: let $L := \varepsilon(D_{R_+}(M))$, a d-

dimensional graded submodule of G. Since there is a homogeneous isomorphism $L \xrightarrow{\cong} D_{R_+}(M)$, it follows from 12.2.10 and 2.2.8(iii) that there is a homogeneous isomorphism $D_{R_+}(L) \xrightarrow{\cong} D_{R_+}(M)$, and from 12.3.3, 12.3.4 and 2.2.8(v) that there are homogeneous isomorphisms

$$H^i_{R_1}(L) \xrightarrow{\cong} H^i_{R_+}(M) \qquad \text{for all } i > 1.$$

Hence $\chi_L = \chi_M$, so that $P_L = P_M$ and $e_i(L) = e_i(M)$ for all $i = 0, \ldots, d-1$; also $\operatorname{reg}^2(L) = \operatorname{reg}^2(M)$. Now $H^1_{R_1}(L) \cong H^1_{R_1}(D_{R_-}(M)) = 0$ by 2.2.8(iv), so that, since $H^0_{R_+}(G) = 0$, we have $H^0_{R_+}(G/L) = 0$. It is therefore sufficient for us to complete this inductive step under the additional assumption that $H^0_{R_+}(G/M) = 0$, and so we shall make this assumption in the remainder of this proof. In view of 2.1.1 and 15.1.4(ii), this means that R_1 contains a non-zerodivisor on G/M, and it follows from Lemma 17.2.6 that we can assume without loss of generality that X_d is a non-zerodivisor on G/M. This we do.

Set $\overline{R} := R_0[X_1, \ldots, X_{d-1}]$, $\overline{G} := G/X_dG$, and $\overline{M} := M/X_dM$. We can view $\overline{G}$ and $\overline{M}$ as $\overline{R}$-modules by means of the inclusion homomorphism $\overline{R} \longrightarrow R$, and the natural map $\overline{M} \longrightarrow \overline{G}$ is an $\overline{R}$-monomorphism because X_d is a non-zerodivisor on G/M. Note also that there is a homogeneous $\overline{R}$-isomorphism $\overline{G} \xrightarrow{\cong} \bigoplus_{i=1}^r \overline{R}(a_i)$. It therefore follows from the inductive hypothesis that

$$\operatorname{reg}^2(\overline{M}) \leq F_a^{(d-1)}(e_0(\overline{M}\lceil_{\overline{R}}), \ldots, e_{d-2}(\overline{M}\lceil_{\overline{R}})).$$

A straightforward adaptation of 4.2.2 to the graded case, with use of the Graded Independence Theorem 13.1.6 instead of the Independence Theorem 4.2.1, will show that there are homogeneous $\overline{R}$-isomorphisms

$$H^i_{\overline{R}_+}(\overline{M}\lceil_{\overline{R}}) \xrightarrow{\cong} H^i_{R_+}(\overline{M})\lceil_{\overline{R}} \qquad \text{for all } i \in \mathbb{N}_0,$$

and a similar argument based on 13.1.3 will show that there is a homogeneous $\overline{R}$-isomorphism

$$D_{\overline{R}_+}(\overline{M}\lceil_{\overline{R}}) \xrightarrow{\cong} D_{R_+}(\overline{M})\lceil_{\overline{R}}.$$

It follows that $\operatorname{reg}^2(\overline{M}\lceil_{\overline{R}}) = \operatorname{reg}^2(M/X_dM)$ and, in view of 17.1.8, that

$$e_i(\overline{M}\lceil_{\overline{R}}) = e_i(M/X_dM) = e_i(M) \qquad \text{for all } i = 0, \ldots, d-2.$$

Set $e := (e_0(M), \ldots, e_{d-1}(M)) \in \mathbb{Z}^d$ and $e' := (e_0(M), \ldots, e_{d-2}(M)) \in \mathbb{Z}^{d-1}$. Thus $\operatorname{reg}^2(M/X_dM) \leq F_a^{(d-1)}(e')$. Recall that $\chi_M(n) = P_M(n) = p_e(n)$ for all $n \in \mathbb{Z}$. We can now deduce from Lemma 17.2.3 with the choice $f = F_a^{(d-1)}(e')$

that

$$\begin{aligned}\operatorname{reg}^2(M) &\le \ell_{R_0}(R_0)\sum_{i=1}^{r}\binom{f+a_i+d-3}{d-1}^{+} - \chi_M(f-2)+f\\ &= \ell_{R_0}(R_0)\sum_{i=1}^{r}\binom{f+a_i+d-3}{d-1}^{+} - p_e(f-2)+f\\ &= F_a^{(d)}(e_0(M),\dots,e_{d-1}(M)). \ \square\end{aligned}$$

Theorem 17.2.7 is based on work of D. Mumford: see [38, p. 101]. In our notation (of 17.2.7), Mumford's work is concerned with the case where $r = 1$ and $a_0 = 0$, that is, where M is just a non-zero graded ideal of R. Mumford showed that there exists a rational polynomial q in d indeterminates such that, for every non-zero graded ideal $\mathfrak{b}$ of R, $\operatorname{reg}^2(\mathfrak{b})$ is bounded above by $q(e_0(\mathfrak{b}),\dots,e_{d-1}(\mathfrak{b}))$, but Mumford did not calculate such a q explicitly in [38]. The following exercise provides an explicit formula for such a q.

17.2.8 Exercise. Let $r \in \mathbb{N}$ and $a := (a_1,\dots,a_r) \in \mathbb{Z}^r$. Let R_0 be an Artinian local ring and set $\lambda := \ell_{R_0}(R_0)$. Define, for each integer $d > 1$, a polynomial $\tilde{F}_a^{(d)} \in \mathbb{Q}[T_0,\dots,T_{d-1}]$ as follows. Extend the notation of 17.1.1(iv),(v) so that $\binom{g}{d-1}$, for $g \in \mathbb{Q}[T_0,\dots,T_{d-1}]$, is interpreted as

$$\frac{g(g-1)\dots(g-d+2)}{(d-1)!} \in \mathbb{Q}[T_0,\dots,T_{d-1}],$$

and $p_{(T_0,\dots,T_{d-1})}$ is interpreted as the polynomial in $\mathbb{Q}[T_0,\dots,T_{d-1}][X]$ given by

$$p_{(T_0,\dots,T_{d-1})}(X) = \sum_{i=0}^{d-1}(-1)^i T_i\binom{X+d-i-1}{d-i-1}.$$

Set $s := \min\{-a_i : 1 \le i \le r\}$. Define

$$\tilde{F}_a^{(2)} = s+1-p_{(T_0,T_1)}(s-1).$$

For $d > 2$, and with the inductive assumption that $\tilde{F}_a^{(d-1)}$ has been defined, set

$$\tilde{F}_a^{(d)} := \lambda\sum_{i=1}^{r}\binom{\tilde{F}_a^{(d-1)}+a_i+d-3}{d-1}^2 - p_{(T_0,\dots,T_{d-1})}\left(\tilde{F}_a^{(d-1)}-2\right)+\tilde{F}_a^{(d-1)}.$$

Now suppose that $R = R_0[X_1,\dots,X_d]$ is a polynomial ring in $d > 1$ indeterminates $X_1,\dots,X_d$ over R_0. Show that

$$\operatorname{reg}^2(M) \le \tilde{F}_a^{(d)}(e_0(M),\dots,e_{d-1}(M))$$

for every non-zero graded submodule M of $\bigoplus_{i=1}^{r} R(a_i)$. (One way to approach this is to modify the proof of Theorem 17.2.7.)

18

Applications to reductions of ideals

In recent years, graded local cohomology theory has played a substantial rôle in the study of Rees rings and associated graded rings of proper ideals in local rings. We do not have enough space in this book to include all we would like about the applications of local cohomology to this area, and so we have decided to select a small portion of the theory which gives some idea of the flavour. The part we have chosen to present in this chapter concerns links between the theory of reductions of ideals in local rings and the concept of Castelnuovo regularity, discussed in Chapter 15. The highlight will be a theorem of L. T. Hoa which asserts that, if $\mathfrak{b}$ is a proper ideal in a local ring having infinite residue field, then there exist $t_0 \in \mathbb{N}$ and $c \in \mathbb{N}_0$ such that, for all $t > t_0$ and every minimal reduction $\mathfrak{a}$ of $\mathfrak{b}^t$, the reduction number $r_{\mathfrak{a}}(\mathfrak{b}^t)$ of $\mathfrak{b}^t$ with respect to $\mathfrak{a}$ is equal to c. This statement of Hoa's Theorem is satisfyingly simple, and makes no mention of local cohomology, and yet Hoa's proof, which we present towards the end of this chapter, makes significant use of graded local cohomology.

18.1 Reductions and integral closures

Reductions of ideals of local rings were first considered by D. G. Northcott and D. Rees in [45]. Nowadays, the concept is recognized as being of major importance in commutative algebra. The original paper [45] of Northcott and Rees was written under unnecessarily restrictive hypotheses, and so we begin this chapter with a rapid development of the links between the two concepts of reduction and integral closure of ideals over an arbitrary commutative Noetherian ring. Throughout this chapter, $\mathfrak{b}$ will denote a second ideal of R.

18.1.1 Definitions. (i) We say that $\mathfrak{a}$ is a *reduction of* $\mathfrak{b}$ precisely when $\mathfrak{a} \subseteq \mathfrak{b}$ and there exists $s \in \mathbb{N}_0$ such that $\mathfrak{a}\mathfrak{b}^s = \mathfrak{b}^{s+1}$; then the least such s is denoted

by $r_{\mathfrak{a}}(\mathfrak{b})$ and called the *reduction number* of $\mathfrak{b}$ with respect to $\mathfrak{a}$. Note that, if $\mathfrak{a}$ is a reduction of $\mathfrak{b}$, then $\mathfrak{a}^m\mathfrak{b}^j = \mathfrak{b}^{m+j}$ for all $m \in \mathbb{N}$ and $j \geq r_{\mathfrak{a}}(\mathfrak{b})$.

(ii) We say that $\mathfrak{a}$ is a *minimal reduction of* $\mathfrak{b}$ if and only if $\mathfrak{a}$ is a reduction of $\mathfrak{b}$ and there is no reduction $\mathfrak{c}$ of $\mathfrak{b}$ with $\mathfrak{c} \subset \mathfrak{a}$.

(iii) We say that $r \in R$ is *integrally dependent on* $\mathfrak{a}$ if and only if there exist $n \in \mathbb{N}$ and $c_1, \ldots, c_n \in R$ with $c_i \in \mathfrak{a}^i$ for $i = 1, \ldots, n$ such that

$$r^n + c_1 r^{n-1} + \cdots + c_{n-1} r + c_n = 0.$$

18.1.2 ♯Exercise. Assume that $\mathfrak{a}$ is a reduction of $\mathfrak{b}$.

(i) Show that $\sqrt{\mathfrak{a}} = \sqrt{\mathfrak{b}}$.

(ii) Let $\mathfrak{c}$ be a third ideal of R such that $\mathfrak{b}$ is a reduction of $\mathfrak{c}$. Show that $\mathfrak{a}$ is a reduction of $\mathfrak{c}$.

18.1.3 ♯Exercise. Show that if $\mathfrak{a}$ is a reduction of $\mathfrak{b}$ and also a reduction of another ideal $\mathfrak{b}'$ of R, then $\mathfrak{a}$ is a reduction of $\mathfrak{b} + \mathfrak{b}'$.

18.1.4 Notation and ♯Exercise. Let $\{a_1, \ldots, a_h\}$ be a generating set for $\mathfrak{a}$, and let T be an indeterminate. We denote by $R[\mathfrak{a}T, T^{-1}]$ the subring of $R[T, T^{-1}] = R[T]_T$ given by $R[\mathfrak{a}T, T^{-1}] = R[a_1T, \ldots, a_hT, T^{-1}]$, and refer to this as the *extended Rees ring of* $\mathfrak{a}$. (Note that $R[a_1T, \ldots, a_hT, T^{-1}]$ is independent of the choice of finite generating set $\{a_1, \ldots, a_h\}$ for $\mathfrak{a}$.)

Let $r \in R$. Show that r is integrally dependent on $\mathfrak{a}$ if and only if the element rT of $R[T, T^{-1}]$ is integral over $R[\mathfrak{a}T, T^{-1}]$.

18.1.5 Proposition. *Assume that* $\mathfrak{a} \subseteq \mathfrak{b}$ *and let* $r \in R$.

(i) *The element* r *is integrally dependent on* $\mathfrak{a}$ *if and only if* $\mathfrak{a}$ *is a reduction of* $\mathfrak{a} + Rr$.

(ii) *The ideal* $\mathfrak{a}$ *is a reduction of* $\mathfrak{b}$ *if and only if each element of* $\mathfrak{b}$ *is integrally dependent on* $\mathfrak{a}$.

Proof. First we suppose that $\mathfrak{a}$ is a reduction of $\mathfrak{b}$, so that there exists $s \in \mathbb{N}$ such that $\mathfrak{a}^m\mathfrak{b}^s = \mathfrak{b}^{m+s}$ for all $m \in \mathbb{N}$. Hence, provided we interpret $\mathfrak{a}^i$ as R when the integer i is negative, $\mathfrak{b}^n \subseteq \mathfrak{a}^{n-s}$ for all $n \in \mathbb{N}_0$. Therefore, within the ring $R[T, T^{-1}]$, we have $R[\mathfrak{b}T, T^{-1}] \subseteq T^sR[\mathfrak{a}T, T^{-1}]$, a finitely generated module over the Noetherian ring $R[\mathfrak{a}T, T^{-1}]$. It follows that $R[\mathfrak{b}T, T^{-1}]$ is integral over its subring $R[\mathfrak{a}T, T^{-1}]$, and so, by 18.1.4, each element of $\mathfrak{b}$ is integrally dependent on $\mathfrak{a}$.

(i) It follows from the above paragraph that if $\mathfrak{a}$ is a reduction of $\mathfrak{a} + Rr$ then r is integrally dependent on $\mathfrak{a}$. Conversely, if r is integrally dependent on

$\mathfrak{a}$, then there exist $n \in \mathbb{N}$ and $c_1, \ldots, c_n \in R$ with $c_i \in \mathfrak{a}^i$ for $i = 1, \ldots, n$ such that $r^n + c_1 r^{n-1} + \cdots + c_{n-1} r + c_n = 0$. Then

$$(\mathfrak{a} + Rr)^n = \mathfrak{a}(\mathfrak{a} + Rr)^{n-1} + Rr^n = \mathfrak{a}(\mathfrak{a} + Rr)^{n-1}$$

and $\mathfrak{a}$ is a reduction of $\mathfrak{a} + Rr$.

(ii) Suppose that each element of $\mathfrak{b}$ is integrally dependent on $\mathfrak{a}$. Let $\{b_1, \ldots, b_t\}$ be a generating set for $\mathfrak{b}$. By part (i), for each $i = 1, \ldots, t$, the ideal $\mathfrak{a}$ is a reduction of $\mathfrak{a} + Rb_i$. Hence $\mathfrak{a}$ is a reduction of $\mathfrak{a} + \sum_{i=1}^{t} Rb_i = \mathfrak{b}$, by 18.1.3. The converse statement has already been proved in the first paragraph of this proof. □

18.1.6 Corollary and Definition. *By* 18.1.3, *the set* $\mathscr{I}$ *of all ideals of* R *which have* $\mathfrak{a}$ *as a reduction has a unique maximal member,* $\overline{\mathfrak{a}}$ *say:* $\overline{\mathfrak{a}}$ *is the union of the members of* $\mathscr{I}$. *By* 18.1.5, *this ideal* $\overline{\mathfrak{a}}$ *is precisely the set of all elements of* R *which are integrally dependent on* $\mathfrak{a}$ *(and so the latter set is an ideal of* R*): we refer to* $\overline{\mathfrak{a}}$ *as the* integral closure of $\mathfrak{a}$. □

18.1.7 Exercise. Show that

(i) the integral closure $\overline{\mathfrak{a}}$ is not a reduction of any ideal of R which properly contains it, and

(ii) $\overline{\mathfrak{a}} = \overline{\mathfrak{b}}$ if and only if $\mathfrak{a}$ and $\mathfrak{b}$ are both reductions of $\mathfrak{a} + \mathfrak{b}$.

We now reproduce the classical argument of Northcott and Rees which shows that, when R is local, every reduction of $\mathfrak{b}$ contains a minimal reduction of $\mathfrak{b}$.

18.1.8 Lemma. *Assume that* $(R, \mathfrak{m})$ *is local and that* $\mathfrak{a} \subseteq \mathfrak{b} + \mathfrak{a}\mathfrak{m}$. *Then* $\mathfrak{a} \subseteq \mathfrak{b}$.

Proof. Since $\mathfrak{b} + \mathfrak{a} = \mathfrak{b} + \mathfrak{a}\mathfrak{m}$, we have $(\mathfrak{b} + \mathfrak{a})/\mathfrak{b} = \mathfrak{m}\big((\mathfrak{b} + \mathfrak{a})/\mathfrak{b}\big)$, and so the result follows from Nakayama's Lemma. □

18.1.9 Lemma (Northcott and Rees [45, §2, Lemma 2]). *Assume that* $(R, \mathfrak{m})$ *is local and that* $\mathfrak{a} \subseteq \mathfrak{b}$. *Then* $\mathfrak{a}$ *is a reduction of* $\mathfrak{b}$ *if and only if* $\mathfrak{a} + \mathfrak{b}\mathfrak{m}$ *is a reduction of* $\mathfrak{b}$.

Proof. It is clear that if $\mathfrak{a}$ is a reduction of $\mathfrak{b}$ then $\mathfrak{a} + \mathfrak{b}\mathfrak{m}$ is a reduction of $\mathfrak{b}$. Now assume that $\mathfrak{a} + \mathfrak{b}\mathfrak{m}$ is a reduction of $\mathfrak{b}$. Then there exists $n \in \mathbb{N}$ such that $(\mathfrak{a} + \mathfrak{b}\mathfrak{m})\mathfrak{b}^n = \mathfrak{b}^{n+1}$, that is, $\mathfrak{b}^{n+1} = \mathfrak{a}\mathfrak{b}^n + \mathfrak{b}^{n+1}\mathfrak{m}$. It therefore follows from Lemma 18.1.8 that $\mathfrak{b}^{n+1} = \mathfrak{a}\mathfrak{b}^n$. □

18.1.10 Lemma. *Assume that* $(R, \mathfrak{m})$ *is local and that* $\mathfrak{a}$ *is a reduction of* $\mathfrak{b}$. *Let* $a_1, \ldots, a_t \in \mathfrak{a}$ *be such that their natural images in* $(\mathfrak{a} + \mathfrak{b}\mathfrak{m})/\mathfrak{b}\mathfrak{m}$ *form a basis for this* $R/\mathfrak{m}$*-space, and set* $\mathfrak{a}' = \sum_{i=1}^{t} Ra_i$. *Then*

(i) $\mathfrak{a}'$ *is a reduction of* $\mathfrak{b}$ *and* $\mathfrak{a}' \subseteq \mathfrak{a}$; *and*

(ii) *if* $\mathfrak{a}$ *is a minimal reduction of* $\mathfrak{b}$, *then* $\mathfrak{a} = \mathfrak{a}'$ *and* $\mathfrak{a} \cap \mathfrak{b}\mathfrak{m} = \mathfrak{a}\mathfrak{m}$.

Proof. (i) Note that $\mathfrak{a}' \subseteq \mathfrak{a} \subseteq \mathfrak{b}$ and $\mathfrak{a}' + \mathfrak{b}\mathfrak{m} = \mathfrak{a} + \mathfrak{b}\mathfrak{m}$. Since $\mathfrak{a}$ is a reduction of $\mathfrak{b}$, it follows from Lemma 18.1.9 that $\mathfrak{a} + \mathfrak{b}\mathfrak{m} = \mathfrak{a}' + \mathfrak{b}\mathfrak{m}$ is a reduction of $\mathfrak{b}$, so that $\mathfrak{a}'$ is a reduction of $\mathfrak{b}$ by the same lemma.

(ii) Now suppose that $\mathfrak{a}$ is a minimal reduction of $\mathfrak{b}$. Then $\mathfrak{a}' = \mathfrak{a}$ by part (i). Also, if $r_1, \ldots, r_t \in R$ are such that $\sum_{i=1}^{t} r_i a_i \in \mathfrak{b}\mathfrak{m}$, then, by choice of $a_1, \ldots, a_t$, we must have $r_1, \ldots, r_t \in \mathfrak{m}$. The claim follows. □

18.1.11 ♯Exercise. Assume that $(R, \mathfrak{m})$ is local and that $\mathfrak{a}$ is a minimal reduction of $\mathfrak{b}$. Let $\mathfrak{d}$ be an ideal of R such that $\mathfrak{a} \subseteq \mathfrak{d} \subseteq \mathfrak{b}$. Show that every minimal generating set for $\mathfrak{a}$ can be extended to a minimal generating set for $\mathfrak{d}$.

18.1.12 Theorem (Northcott and Rees [45, §2, Theorem 1]). *Assume that* $(R, \mathfrak{m})$ *is local and that* $\mathfrak{a}$ *is a reduction of* $\mathfrak{b}$. *Then* $\mathfrak{a}$ *contains a minimal reduction of* $\mathfrak{b}$.

Proof. Let Σ be the set of all ideals of R of the form $\mathfrak{d} + \mathfrak{b}\mathfrak{m}$, where $\mathfrak{d}$ is a reduction of $\mathfrak{b}$ and is contained in $\mathfrak{a}$. Note that $\mathfrak{a} + \mathfrak{b}\mathfrak{m} \in \Sigma$. Since $\mathfrak{b}/\mathfrak{b}\mathfrak{m}$ is a finite-dimensional vector space over $R/\mathfrak{m}$, the set Σ has a minimal member, and so there exists a reduction $\mathfrak{c}'$ of $\mathfrak{b}$ contained in $\mathfrak{a}$ such that $\mathfrak{c}' + \mathfrak{b}\mathfrak{m}$ is a minimal member of Σ. Let $c_1, \ldots, c_t \in \mathfrak{c}'$ be such that their natural images in $(\mathfrak{c}' + \mathfrak{b}\mathfrak{m})/\mathfrak{b}\mathfrak{m}$ form a basis for this $R/\mathfrak{m}$-space, and set $\mathfrak{c} = \sum_{i=1}^{t} Rc_i$. Now $\mathfrak{c}$ is a reduction of $\mathfrak{b}$ by 18.1.10(i); we shall prove that it is a minimal reduction of $\mathfrak{b}$.

First note that if $r_1, \ldots, r_t \in R$ are such that $\sum_{i=1}^{t} r_i c_i \in \mathfrak{b}\mathfrak{m}$, then, by choice of $c_1, \ldots, c_t$, we must have $r_1, \ldots, r_t \in \mathfrak{m}$. Hence $\mathfrak{c} \cap \mathfrak{b}\mathfrak{m} \subseteq \mathfrak{c}\mathfrak{m}$.

Now suppose that $\mathfrak{c}_0$ is a reduction of $\mathfrak{b}$ with $\mathfrak{c}_0 \subseteq \mathfrak{c}$. Then $\mathfrak{c}_0 + \mathfrak{b}\mathfrak{m} \in \Sigma$ and $\mathfrak{c}_0 + \mathfrak{b}\mathfrak{m} \subseteq \mathfrak{c}' + \mathfrak{b}\mathfrak{m}$. Hence, by the choice of $\mathfrak{c}'$, we must have

$$\mathfrak{c}_0 + \mathfrak{b}\mathfrak{m} = \mathfrak{c}' + \mathfrak{b}\mathfrak{m} = \mathfrak{c} + \mathfrak{b}\mathfrak{m}.$$

It follows that $\mathfrak{c} \subseteq \mathfrak{c}_0 + \mathfrak{b}\mathfrak{m}$; therefore $\mathfrak{c} \subseteq \mathfrak{c}_0 + (\mathfrak{b}\mathfrak{m} \cap \mathfrak{c}) \subseteq \mathfrak{c}_0 + \mathfrak{c}\mathfrak{m}$ by the immediately preceding paragraph in this proof. It now follows from 18.1.8 that $\mathfrak{c} \subseteq \mathfrak{c}_0$, so that $\mathfrak{c} = \mathfrak{c}_0$. □

There is an important connection between minimal reductions of ideals in local rings and analytical independence.

18.1.13 Definition. Assume that $(R, \mathfrak{m})$ is local. Then $v_1, \ldots, v_t \in \mathfrak{b}$ are said to be *analytically independent in* $\mathfrak{b}$ if and only if, whenever $h \in \mathbb{N}$ and $f \in R[X_1, \ldots, X_t]$ (the ring of polynomials over R in t indeterminates) is a homogeneous polynomial of degree h such that $f(v_1, \ldots, v_t) \in \mathfrak{b}^h\mathfrak{m}$, then all the coefficients of f lie in $\mathfrak{m}$.

Note that, if $v_1, \ldots, v_t \in \mathfrak{b}$ are analytically independent in $\mathfrak{b}$, and $\mathfrak{c} := \sum_{i=1}^t Rv_i$, then $\mathfrak{c}^h \cap \mathfrak{b}^h\mathfrak{m} = \mathfrak{c}^h\mathfrak{m}$ for all $h \in \mathbb{N}$.

18.1.14 Lemma (Northcott and Rees [45, §4, Lemma 1]). *Assume that $(R, \mathfrak{m})$ is local and that $\mathfrak{b}$ is proper, and let $v_1, \ldots, v_t \in \mathfrak{b}$ be analytically independent in $\mathfrak{b}$. Then $v_1, \ldots, v_t$ form a minimal generating set for $\sum_{i=1}^t Rv_i$, and, furthermore, if $\{w_1, \ldots, w_t\}$ is a minimal generating set for $\sum_{i=1}^t Rv_i$, then $w_1, \ldots, w_t$ are analytically independent in $\mathfrak{b}$.*

Proof. Set $\mathfrak{c} := \sum_{i=1}^t Rv_i$. If $r_1, \ldots, r_t \in R$ are such that $\sum_{i=1}^t r_i v_i \in \mathfrak{c}\mathfrak{m}$, then, since $\mathfrak{c} \subseteq \mathfrak{b}$, it follows that $r_1, \ldots, r_t \in \mathfrak{m}$. Hence $v_1, \ldots, v_t$ form a minimal generating set for $\mathfrak{c}$.

Next, let $h \in \mathbb{N}$ and $f \in R[X_1, \ldots, X_t]$ be a homogeneous polynomial of degree h such that $f(w_1, \ldots, w_t) \in \mathfrak{b}^h\mathfrak{m}$. There exist $r_{ij} \in R$ $(1 \leq i, j \leq t)$ such that $w_i = \sum_{j=1}^t r_{ij} v_j$ for $i = 1, \ldots, t$, and so

$$f\left(\textstyle\sum_{j=1}^t r_{1j} v_j, \ldots, \sum_{j=1}^t r_{tj} v_j\right) \in \mathfrak{b}^h\mathfrak{m}.$$

Since $v_1, \ldots, v_t \in \mathfrak{b}$ are analytically independent in $\mathfrak{b}$, it follows that all the coefficients of the homogeneous polynomial $f(\sum_{j=1}^t r_{1j} X_j, \ldots, \sum_{j=1}^t r_{tj} X_j)$ belong to $\mathfrak{m}$.

Denote the natural image in $k := R/\mathfrak{m}$ (respectively $k[X_1, \ldots, X_t]$) of $r \in R$ (respectively $q \in R[X_1, \ldots, X_t]$) by $\overline{r}$ (respectively $\overline{q}$). Now $[\overline{r_{ij}}]$ is an invertible $t \times t$ matrix over k, and so there exists a $t \times t$ matrix $[s_{ij}]$ over R such that $[\overline{r_{ij}}][\overline{s_{ij}}] = I_t$, the $t \times t$ identity matrix. Since $\overline{f}\left(\sum_{j=1}^t \overline{r_{1j}} X_j, \ldots, \sum_{j=1}^t \overline{r_{tj}} X_j\right) = 0$ in $k[X_1, \ldots, X_t]$, it follows that

$$\overline{f}\left(\textstyle\sum_{j=1}^t \overline{r_{1j}} \left(\sum_{l=1}^t \overline{s_{jl}} X_l\right), \ldots, \sum_{j=1}^t \overline{r_{tj}} \left(\sum_{l=1}^t \overline{s_{jl}} X_l\right)\right) = 0,$$

and so $\overline{f}(X_1, \ldots, X_t) = 0$. Thus all the coefficients of f lie in $\mathfrak{m}$. □

18.1.15 Proposition (Northcott and Rees [45, §4, Lemma 2]). *Assume that $(R, \mathfrak{m})$ is local and that $k := R/\mathfrak{m}$ is infinite. Suppose that $\mathfrak{b}$ is proper and $\mathfrak{a}$ is a minimal reduction of $\mathfrak{b}$, and let $v_1, \ldots, v_t$ form a minimal generating set for $\mathfrak{a}$. Then $v_1, \ldots, v_t$ are analytically independent in $\mathfrak{b}$.*

Proof. Let $h \in \mathbb{N}$ and $f \in R[X_1, \ldots, X_t]$ be a homogeneous polynomial of degree h such that $f(v_1, \ldots, v_t) \in \mathfrak{b}^h\mathfrak{m}$. Suppose that the coefficient u of X_1^h is a unit of R. Then $v_1^h \in \mathfrak{b}^h\mathfrak{m} + v_2\mathfrak{a}^{h-1} + \cdots + v_t\mathfrak{a}^{h-1}$, and so

$$\mathfrak{a}^h = Rv_1^h + (Rv_2 + \cdots + Rv_t)\mathfrak{a}^{h-1} \subseteq \mathfrak{b}^h\mathfrak{m} + (Rv_2 + \cdots + Rv_t)\mathfrak{a}^{h-1}.$$

Set $\mathfrak{a}' := Rv_2 + \ldots + Rv_t$. Now there exists $n \in \mathbb{N}$ such that $\mathfrak{a}\mathfrak{b}^n = \mathfrak{b}^{n+1}$. Hence

$$\mathfrak{b}^{h+n} = \mathfrak{a}^h\mathfrak{b}^n \subseteq \mathfrak{b}^{h+n}\mathfrak{m} + \mathfrak{a}'\mathfrak{a}^{h-1}\mathfrak{b}^n = \mathfrak{b}^{h+n}\mathfrak{m} + \mathfrak{a}'\mathfrak{b}^{h+n-1}.$$

Hence $\mathfrak{b}^{h+n} \subseteq \mathfrak{a}'\mathfrak{b}^{h+n-1}$ by 18.1.8, so that $\mathfrak{b}^{h+n} = \mathfrak{a}'\mathfrak{b}^{h+n-1}$ and $\mathfrak{a}'$ is a reduction of $\mathfrak{b}$. This contradicts the fact that $\mathfrak{a}$ is a minimal reduction of $\mathfrak{b}$, since $\mathfrak{a}' \subset \mathfrak{a}$. Hence $u \in \mathfrak{m}$.

Next let $[r_{ij}]$ be a $t \times t$ matrix over R such that all the elements of the first column, that is $r_{11}, r_{21}, \ldots, r_{t1}$, are units of R and $\det[r_{ij}]$ is also a unit. Then there is a minimal generating set $\{w_1, \ldots, w_t\}$ for $\mathfrak{a}$ such that $v_i = \sum_{j=1}^t r_{ij}w_j$ for all $i = 1, \ldots, t$. Since

$$f\left(\textstyle\sum_{j=1}^t r_{1j}w_j, \ldots, \sum_{j=1}^t r_{tj}w_j\right) \in \mathfrak{b}^h\mathfrak{m},$$

it follows from the first paragraph of this proof that $f(r_{11}, \ldots, r_{t1})$, which is the coefficient of X_1^h in the form $f\left(\sum_{j=1}^t r_{1j}X_j, \ldots, \sum_{j=1}^t r_{tj}X_j\right)$, lies in $\mathfrak{m}$. Thus, if we denote the natural image in $k := R/\mathfrak{m}$ (respectively $k[X_1, \ldots, X_t]$) of $r \in R$ (respectively $q \in R[X_1, \ldots, X_t]$) by $\overline{r}$ (respectively $\overline{q}$), then $\overline{f}(\overline{r_{11}}, \ldots, \overline{r_{t1}}) = 0$. It follows that $\overline{f}(\alpha_1, \ldots, \alpha_t) = 0$ for all choices of $(\alpha_1, \ldots, \alpha_t) \in (k \setminus \{0\})^t$; hence, since k is infinite, $\overline{f} = 0$. □

18.2 The analytic spread

We now consider the graded rings which will provide the framework for connections between reductions of ideals and graded local cohomology.

18.2.1 Notation and Definition. Suppose that $\mathfrak{b}$ is proper and $\mathfrak{a}$ is a reduction of $\mathfrak{b}$.

(i) By 18.1.6 and 18.1.4, the extended Rees ring $R[\mathfrak{b}T, T^{-1}]$ is integral over its subring $R[\mathfrak{a}T, T^{-1}]$. We denote the associated graded ring $\bigoplus_{i\in\mathbb{N}_0} \mathfrak{b}^i/\mathfrak{b}^{i+1}$ by $\mathscr{G}(\mathfrak{b}) = \bigoplus_{i\in\mathbb{N}_0} \mathscr{G}(\mathfrak{b})_i$. Since there is a homogeneous isomorphism of graded rings

$$R[\mathfrak{b}T, T^{-1}]/T^{-1}R[\mathfrak{b}T, T^{-1}] \xrightarrow{\cong} \mathscr{G}(\mathfrak{b})$$

(and a similar one for $\mathscr{G}(\mathfrak{a})$), it follows that $\mathscr{G}(\mathfrak{b})$ is integral over the natural image of $\mathscr{G}(\mathfrak{a})$.

(ii) Now suppose, in addition, that $(R, \mathfrak{m})$ is local. The extension $\mathfrak{m}\mathscr{G}(\mathfrak{b})$ of $\mathfrak{m}$ to $\mathscr{G}(\mathfrak{b})$ under the natural ring homomorphism is a graded ideal: in fact, $\mathfrak{m}\mathscr{G}(\mathfrak{b}) = \bigoplus_{i\in\mathbb{N}_0} \mathfrak{m}\mathfrak{b}^i/\mathfrak{b}^{i+1}$. The *analytic spread* $\operatorname{spr}(\mathfrak{b})$ of $\mathfrak{b}$ is defined by

$$\operatorname{spr}(\mathfrak{b}) := \dim\left(\mathscr{G}(\mathfrak{b})/\mathfrak{m}\mathscr{G}(\mathfrak{b})\right).$$

Note that $\mathscr{G}(\mathfrak{b})/\mathfrak{m}\mathscr{G}(\mathfrak{b})$ is (homogeneously) isomorphic to the graded ring $\bigoplus_{i\in\mathbb{N}_0} \mathfrak{b}^i/\mathfrak{m}\mathfrak{b}^i$, in which $(r_i + \mathfrak{m}\mathfrak{b}^i)(r'_j + \mathfrak{m}\mathfrak{b}^j) = r_i r'_j + \mathfrak{m}\mathfrak{b}^{i+j}$ for $(i, j \in \mathbb{N}_0$ and) all $r_i \in \mathfrak{b}^i$, $r'_j \in \mathfrak{b}^j$.

(iii) Note that, since $\mathfrak{a}$ is a reduction of $\mathfrak{b}$, it follows that $\mathscr{G}(\mathfrak{b})/\mathfrak{m}\mathscr{G}(\mathfrak{b})$ is integral over the natural image of $\mathscr{G}(\mathfrak{a})/\mathfrak{m}\mathscr{G}(\mathfrak{a})$. Observe also that, if $\mathfrak{a}$ can be generated by elements which are analytically independent in $\mathfrak{b}$, then $\mathfrak{a}^i \cap \mathfrak{b}^i\mathfrak{m} = \mathfrak{a}^i\mathfrak{m}$ for all $i \in \mathbb{N}$, so that the natural homogeneous ring homomorphism $\mathscr{G}(\mathfrak{a})/\mathfrak{m}\mathscr{G}(\mathfrak{a}) \longrightarrow \mathscr{G}(\mathfrak{b})/\mathfrak{m}\mathscr{G}(\mathfrak{b})$ is injective.

18.2.2 Lemma. *Suppose that* $(R, \mathfrak{m})$ *is local and that* $\mathfrak{b}$ *is proper. Then* $\operatorname{spr}(\mathfrak{b}) = \operatorname{spr}(\mathfrak{b}^t)$ *for all* $t \in \mathbb{N}$.

Proof. By Definition 18.2.1(ii),

$$\operatorname{spr}(\mathfrak{b}) := \dim\left(\mathscr{G}(\mathfrak{b})/\mathfrak{m}\mathscr{G}(\mathfrak{b})\right) \qquad \text{and} \qquad \operatorname{spr}(\mathfrak{b}^t) := \dim\left(\mathscr{G}(\mathfrak{b}^t)/\mathfrak{m}\mathscr{G}(\mathfrak{b}^t)\right).$$

Now there are homogeneous ring isomorphisms

$$\mathscr{G}(\mathfrak{b})/\mathfrak{m}\mathscr{G}(\mathfrak{b}) \xrightarrow{\cong} \bigoplus_{i\in\mathbb{N}_0} \mathfrak{b}^i/\mathfrak{m}\mathfrak{b}^i \qquad \text{and} \qquad \mathscr{G}(\mathfrak{b}^t)/\mathfrak{m}\mathscr{G}(\mathfrak{b}^t) \xrightarrow{\cong} \bigoplus_{i\in\mathbb{N}_0} \mathfrak{b}^{ti}/\mathfrak{m}\mathfrak{b}^{ti}.$$

It is clear from these that $\mathscr{G}(\mathfrak{b}^t)/\mathfrak{m}\mathscr{G}(\mathfrak{b}^t)$ is homogeneously isomorphic to the t-th Veronesean subring (see 12.4.6) of $\mathscr{G}(\mathfrak{b})/\mathfrak{m}\mathscr{G}(\mathfrak{b})$. The claim now follows from the fact that a commutative Noetherian graded ring has the same dimension as its t-th Veronesean subring because the former is integral over the latter. □

The observations in 18.2.1(iii) have some very important consequences.

18.2.3 Note. Suppose that $(R, \mathfrak{m})$ is local, that $\mathfrak{a} \subseteq \mathfrak{b} \subset R$ and that $\mathfrak{a}$ is generated by $v_1, \ldots, v_t$ which are analytically independent in $\mathfrak{b}$. Set $k := R/\mathfrak{m}$. Then $v_1, \ldots, v_t$ are, of course, analytically independent in $\mathfrak{a}$, and it is immediate from Definition 18.1.13 that there is a homogeneous isomorphism $\phi : k[X_1, \ldots, X_t] \xrightarrow{\cong} \bigoplus_{i\in\mathbb{N}_0} \mathfrak{a}^i/\mathfrak{m}\mathfrak{a}^i$ of graded k-algebras (where $X_1, \ldots, X_t$ are independent indeterminates) such that $\phi(X_i) = v_i + \mathfrak{m}\mathfrak{a}$ for all $i = 1, \ldots, t$. Since $\mathscr{G}(\mathfrak{a})/\mathfrak{m}\mathscr{G}(\mathfrak{a}) \cong \bigoplus_{i\in\mathbb{N}_0} \mathfrak{a}^i/\mathfrak{m}\mathfrak{a}^i$, we have $\dim(\mathscr{G}(\mathfrak{a})/\mathfrak{m}\mathscr{G}(\mathfrak{a})) = t$.

18.2.4 Theorem (Northcott and Rees [45, §4, Theorems 1 and 2]). *Assume that* $(R, \mathfrak{m})$ *is local and that* $k := R/\mathfrak{m}$ *is infinite. Suppose that* $\mathfrak{b}$ *is proper and that*

$\mathfrak{a}$ is a reduction of $\mathfrak{b}$, and let $t := \dim_k(\mathfrak{a}/\mathfrak{m}\mathfrak{a})$, the number of elements in each minimal generating set for $\mathfrak{a}$. Let $\{v_1, \ldots, v_t\}$ be a minimal generating set for $\mathfrak{a}$. Then

(i) $\operatorname{spr}(\mathfrak{b}) \leq t$;

(ii) *$\mathfrak{a}$ is a minimal reduction of $\mathfrak{b}$ if and only if $\operatorname{spr}(\mathfrak{b}) = t$;*

(iii) *hence, at least $\operatorname{spr}(\mathfrak{b})$ elements are needed to generate $\mathfrak{a}$, and if $\mathfrak{a}$ can be generated by $\operatorname{spr}(\mathfrak{b})$ elements, then it is a minimal reduction of $\mathfrak{b}$;*

(iv) *$\mathfrak{a}$ is a minimal reduction of $\mathfrak{b}$ if and only if $v_1, \ldots, v_t$ are analytically independent in $\mathfrak{b}$.*

Proof. Note that $\mathfrak{a}$ contains a minimal reduction $\mathfrak{c}$ of $\mathfrak{b}$, by Theorem 18.1.12; let $w_1, \ldots, w_s$ form a minimal generating set for $\mathfrak{c}$. Then $w_1, \ldots, w_s$ are analytically independent in $\mathfrak{b}$ by 18.1.15. By 18.2.1(iii), the graded ring $\mathcal{G}(\mathfrak{b})/\mathfrak{m}\mathcal{G}(\mathfrak{b})$ can be viewed as an integral extension ring of $\mathcal{G}(\mathfrak{c})/\mathfrak{m}\mathcal{G}(\mathfrak{c})$, and so $\dim(\mathcal{G}(\mathfrak{c})/\mathfrak{m}\mathcal{G}(\mathfrak{c})) = \dim(\mathcal{G}(\mathfrak{b})/\mathfrak{m}\mathcal{G}(\mathfrak{b})) = \operatorname{spr}(\mathfrak{b})$. However, it is immediate from 18.2.3 that $\dim(\mathcal{G}(\mathfrak{c})/\mathfrak{m}\mathcal{G}(\mathfrak{c})) = s$, and so $s = \operatorname{spr}(\mathfrak{b})$.

(i) By 18.1.11, every minimal generating set for $\mathfrak{c}$ can be extended to a minimal generating set for $\mathfrak{a}$. Hence $\operatorname{spr}(\mathfrak{b}) = s \leq t$.

(ii) If $\mathfrak{a}$ is a minimal reduction of $\mathfrak{b}$, then $\mathfrak{a} = \mathfrak{c}$ and $t = s = \operatorname{spr}(\mathfrak{b})$.

Now suppose that $t = \operatorname{spr}(\mathfrak{b})$. By 18.1.11, every minimal generating set for $\mathfrak{c}$ can be extended to a minimal generating set for $\mathfrak{a}$, and so $\operatorname{spr}(\mathfrak{b}) = s \leq t = \operatorname{spr}(\mathfrak{b})$. Therefore $s = t$ and $w_1, \ldots, w_s$ actually generate $\mathfrak{a}$. It follows that $\mathfrak{a} = \mathfrak{c}$, and $\mathfrak{a}$ is a minimal reduction of $\mathfrak{b}$.

(iii) This is a restatement of most of parts (i) and (ii).

(iv) If $\mathfrak{a}$ is a minimal reduction of $\mathfrak{b}$, then $v_1, \ldots, v_t$ are analytically independent in $\mathfrak{b}$ by 18.1.15. Conversely, if $v_1, \ldots, v_t$ are analytically independent in $\mathfrak{b}$, then $t = \dim(\mathcal{G}(\mathfrak{a})/\mathfrak{m}\mathcal{G}(\mathfrak{a}))$ by 18.2.3, and $\mathcal{G}(\mathfrak{b})/\mathfrak{m}\mathcal{G}(\mathfrak{b})$ can be viewed as an integral extension ring of $\mathcal{G}(\mathfrak{a})/\mathfrak{m}\mathcal{G}(\mathfrak{a})$, by 18.2.1(iii); therefore $t = \dim(\mathcal{G}(\mathfrak{b})/\mathfrak{m}\mathcal{G}(\mathfrak{b})) = \operatorname{spr}(\mathfrak{b})$, so that $\mathfrak{a}$ is a minimal reduction of $\mathfrak{b}$ by (ii). □

The next Lemma 18.2.5 is included to help the reader solve Exercise 18.2.6; that exercise presents an important result of Northcott and Rees.

18.2.5 Lemma. *Suppose that $(R, \mathfrak{m})$ is local and that $v_1, \ldots, v_t$ are analytically independent in $\mathfrak{b}$. Then $t \leq \operatorname{spr}(\mathfrak{b})$.*

Proof. Set $k := R/\mathfrak{m}$ and $\mathfrak{c} := \sum_{i=1}^{t} Rv_i$. Since $\mathfrak{c}^i \cap \mathfrak{b}^i\mathfrak{m} = \mathfrak{c}^i\mathfrak{m}$ for all $i \in \mathbb{N}$, the natural homogeneous ring homomorphism $\mathcal{G}(\mathfrak{c})/\mathfrak{m}\mathcal{G}(\mathfrak{c}) \longrightarrow \mathcal{G}(\mathfrak{b})/\mathfrak{m}\mathcal{G}(\mathfrak{b})$ is injective. Therefore, by 18.2.3, and with an obvious notation,

$$\dim_k \left(\mathcal{G}(\mathfrak{b})/\mathfrak{m}\mathcal{G}(\mathfrak{b})\right)_i \geq \dim_k \left(\mathcal{G}(\mathfrak{c})/\mathfrak{m}\mathcal{G}(\mathfrak{c})\right)_i = \binom{i+t-1}{t-1} \qquad \text{for all } i \in \mathbb{N}_0.$$

Hence, with the notation of 17.1.7, $\deg P_{\mathscr{G}(\mathfrak{b})/\mathfrak{m}\mathscr{G}(\mathfrak{b})} \geq t-1$, and therefore $t \leq \operatorname{spr}(\mathfrak{b})$ by 17.1.6. □

18.2.6 Exercise (Northcott and Rees [45, §4, Theorem 3]). Assume that $(R, \mathfrak{m})$ is local and that $k := R/\mathfrak{m}$ is infinite. Suppose that $\mathfrak{b}$ is proper. Show that $\operatorname{spr}(\mathfrak{b})$ is the maximum number of elements of $\mathfrak{b}$ which are analytically independent in $\mathfrak{b}$.

18.2.7 Exercise. Assume that $(R, \mathfrak{m})$ is local and let $v_1, \ldots, v_t \in R$. Recall from [35, pp. 106-7] that $v_1, \ldots, v_t$ are *analytically independent* if and only if, whenever $f \in R[X_1, \ldots, X_t]$ is a homogeneous polynomial such that $f(v_1, \ldots, v_t) = 0$, then all the coefficients of f lie in $\mathfrak{m}$.

Show that $v_1, \ldots, v_t$ are analytically independent if and only if they are analytically independent in the ideal $\sum_{i=1}^{t} Rv_i$ which they generate.

18.2.8 Exercise (Northcott and Rees [45, §4, Lemma 4, Theorems 4, 5, and §6, Theorem 1]). Assume that $(R, \mathfrak{m})$ is local and that $k := R/\mathfrak{m}$ is infinite. Suppose that $\mathfrak{b}$ is proper. We say that $\mathfrak{b}$ is *basic* precisely when it has no reduction other than itself. Let $v_1, \ldots, v_t$ form a minimal generating set for $\mathfrak{b}$.

(i) Show that $\operatorname{ht} \mathfrak{b} \leq \operatorname{spr}(\mathfrak{b}) \leq \dim_k(\mathfrak{b}/\mathfrak{m}\mathfrak{b}) = t$.

(ii) Show that the following statements are equivalent:

(a) $\mathfrak{b}$ is basic;

(b) $v_1, \ldots, v_t$ are analytically independent (see Exercise 18.2.7);

(c) $\operatorname{spr}(\mathfrak{b}) = \dim_k(\mathfrak{b}/\mathfrak{m}\mathfrak{b})$.

(iii) Show that, if $\mathfrak{b}$ can be generated by t elements and has height t, then $\mathfrak{b}$ is basic and the members of each minimal generating set for $\mathfrak{b}$ are analytically independent.

(iv) Deduce that the members of a system of parameters for R are analytically independent.

(v) Let $\mathfrak{q}$ be an $\mathfrak{m}$-primary ideal of R. Show that $\operatorname{spr}(\mathfrak{q}) = \dim R$. (Here is a hint: $\ell_R(\mathfrak{q}^n/\mathfrak{q}^{n+1}) = \ell_R(R/\mathfrak{q}^{n+1}) - \ell_R(R/\mathfrak{q}^n)$ for all $n \in \mathbb{N}$, where 'ℓ' denotes length.)

18.3 Links with Castelnuovo regularity

Local cohomology has still not made an appearance in this chapter! We are soon going to make, in the case where $(R, \mathfrak{m})$ is local, some calculations with local cohomology over the associated graded ring $\mathscr{G}(\mathfrak{b}) = \bigoplus_{n \in \mathbb{N}_0} \mathscr{G}(\mathfrak{b})_n$ of a proper ideal $\mathfrak{b}$ of R. We note that $\mathscr{G}(\mathfrak{b})$ is a positively graded, homogeneous

commutative Noetherian ring: the theory in the next part of this chapter concerns such rings and will eventually be applied to $\mathcal{G}(\mathfrak{b})$.

18.3.1 Definition. Assume that $R = \bigoplus_{n\in\mathbb{N}_0} R_n$ is positively graded and homogeneous. We say that an ideal $\mathfrak{A}$ of R is a **reduction of* R_+ if and only if $\mathfrak{A}$ is graded, can be generated by homogeneous elements of R of degree 1, and is a reduction of R_+.

18.3.2 Lemma. *Assume that $R = \bigoplus_{n\in\mathbb{N}_0} R_n$ is positively graded and homogeneous, and let $\mathfrak{A} = \bigoplus_{n\in\mathbb{N}} \mathfrak{A}_n$ be a graded ideal of R generated by homogeneous elements of degree 1. Then $\mathfrak{A}$ is a *reduction of R_+ if and only if there exists $m \in \mathbb{N}_0$ such that $R_{m+1} = \mathfrak{A}_{m+1}$; when this is the case, $R_{i+1} = \mathfrak{A}_{i+1}$ for all $i \geq m$, and the least $i \in \mathbb{N}_0$ such that $R_{i+1} = \mathfrak{A}_{i+1}$ is equal to the reduction number $r_{\mathfrak{A}}(R_+)$ (see 18.1.1), so that $r_{\mathfrak{A}}(R_+) = \operatorname{end}(R/\mathfrak{A})$.*

Proof. Suppose that $R = R_0[x_1, \ldots, x_t]$, where $x_1, \ldots, x_t \in R_1$, and that $\mathfrak{A}$ is generated by $a_1, \ldots, a_h \in \mathfrak{A}_1$. We use the notation $R_{\geq i}$, for $i \in \mathbb{N}$, of 15.1.1.

Let $i \in \mathbb{N}_0$. Then a typical element of R_i is a sum of finitely many elements of the form $r_0 x_1^{j_1} \ldots x_t^{j_t}$, where $r_0 \in R_0$ and $j_1, \ldots, j_t \in \mathbb{N}_0$ are such that $\sum_{k=1}^{t} j_k = i$, and a typical element of $\mathfrak{A}_{i+1}$ is a sum of finitely many elements of the form $a_l r_i$, where $l \in \{1, \ldots, h\}$ and $r_i \in R_i$. It follows that if $R_{i-1} = \mathfrak{A}_{i+1}$ then $R_{i+2} = \mathfrak{A}_{i+2}$, that $(R_+)^i = R_{\geq i}$, and that $\mathfrak{A}(R_+)^i = \mathfrak{A}_{\geq i+1}$. All the claims now follow easily. □

18.3.3 Remark. Assume that $R = \bigoplus_{n\in\mathbb{N}_0} R_n$ is positively graded and that $(R_0, \mathfrak{m}_0)$ is local; set $k := R_0/\mathfrak{m}_0$. Let $\mathfrak{A} = \bigoplus_{n\in\mathbb{N}} \mathfrak{A}_n$ be a graded ideal of R generated by homogeneous elements of degree 1. Then the minimum number of homogeneous elements (of degree 1) needed to generate $\mathfrak{A}$ is $\dim_k(\mathfrak{A}_1/\mathfrak{m}_0\mathfrak{A}_1)$.

18.3.4 Lemma. *Suppose that $(R, \mathfrak{m})$ is local, and that $\mathfrak{a} \subseteq \mathfrak{b} \subset R$. Let $\mathfrak{G}(\mathfrak{a})$ denote the ideal of the associated graded ring $\mathcal{G}(\mathfrak{b}) = \bigoplus_{i\in\mathbb{N}_0} \mathcal{G}(\mathfrak{b})_i$ of $\mathfrak{b}$ generated by $\{a + \mathfrak{b}^2 : a \in \mathfrak{a}\} \subseteq \mathcal{G}(\mathfrak{b})_1$.*

*Then $\mathfrak{a}$ is a reduction of $\mathfrak{b}$ if and only if $\mathfrak{G}(\mathfrak{a})$ is a *reduction of $\mathcal{G}(\mathfrak{b})_+$. Furthermore, when this is the case, $r_{\mathfrak{a}}(\mathfrak{b}) = r_{\mathfrak{G}(\mathfrak{a})}(\mathcal{G}(\mathfrak{b})_+)$.*

Proof. Let $i \in \mathbb{N}_0$. Then the $(i+1)$-th component $\mathfrak{G}(\mathfrak{a})_{i+1}$ of $\mathfrak{G}(\mathfrak{a})$ is given by

$$\mathfrak{G}(\mathfrak{a})_{i+1} = (\mathfrak{a}\mathfrak{b}^i + \mathfrak{b}^{i+2})/\mathfrak{b}^{i+2}.$$

By 18.1.8 and the fact that $\mathfrak{b}$ is proper, $\mathfrak{a}\mathfrak{b}^i = \mathfrak{b}^{i+1}$ if and only if $\mathfrak{a}\mathfrak{b}^i + \mathfrak{b}^{i+2} = \mathfrak{b}^{i+1}$, that is, if and only if $\mathfrak{G}(\mathfrak{a})_{i-1} = \mathcal{G}(\mathfrak{b})_{i-1}$. The claims therefore follow from 18.3.2. □

18.3.5 Lemma (L. T. Hoa [26, Lemma 2.3]). *Assume that* $(R, \mathfrak{m})$ *is local and that* $k := R/\mathfrak{m}$ *is infinite. Suppose that* $\mathfrak{b}$ *is proper. Then* $\operatorname{spr}(\mathfrak{b}) = \operatorname{ara}(\mathscr{G}(\mathfrak{b})_+)$, *and their common value is the greatest integer* i *such that* $H^i_{\mathscr{G}(\mathfrak{b})_+}(\mathscr{G}(\mathfrak{b})) \neq 0$.

Proof. By 18.1.12 and 18.2.4, there exists a minimal reduction $\mathfrak{a}$ of $\mathfrak{b}$, and this can be generated by $s := \operatorname{spr}(\mathfrak{b})$ elements. Therefore, by 18.3.4, and with the notation of that Lemma, $\mathfrak{G}(\mathfrak{a})$ is a *reduction of $\mathscr{G}(\mathfrak{b})_+$. Hence, by 18.1.2(i), we have $\sqrt{\mathfrak{G}(\mathfrak{a})} = \sqrt{\mathscr{G}(\mathfrak{b})_+}$, and so $\operatorname{ara}(\mathscr{G}(\mathfrak{b})_+) \leq s$. Let M be an arbitrary $\mathscr{G}(\mathfrak{b})$-module. By 3.3.3, we have $H^i_{\mathscr{G}(\mathfrak{b})_+}(M) = 0$ for every $i > \operatorname{ara}(\mathscr{G}(\mathfrak{b})_+)$, and so, in particular, for every $i > s$.

Consequently, the epimorphism $\mathscr{G}(\mathfrak{b}) \longrightarrow \mathscr{G}(\mathfrak{b})/\mathfrak{m}\mathscr{G}(\mathfrak{b})$ induces an epimorphism $H^s_{\mathscr{G}(\mathfrak{b})_+}(\mathscr{G}(\mathfrak{b})) \longrightarrow H^s_{\mathscr{G}(\mathfrak{b})_+}(\mathscr{G}(\mathfrak{b})/\mathfrak{m}\mathscr{G}(\mathfrak{b}))$, and so it is enough for us to show that $H^s_{\mathscr{G}(\mathfrak{b})_+}(\mathscr{G}(\mathfrak{b})/\mathfrak{m}\mathscr{G}(\mathfrak{b})) \neq 0$ in order to complete the proof. This we do.

The extension of $\mathscr{G}(\mathfrak{b})_+$ to the *local graded ring $\mathscr{G}(\mathfrak{b})/\mathfrak{m}\mathscr{G}(\mathfrak{b})$ is the unique *maximal ideal, and is, in fact, also maximal; it is therefore of height s, by 13.1.14. It therefore follows from Theorem 6.1.4 and the Graded Independence Theorem 13.1.6 that $H^s_{\mathscr{G}(\mathfrak{b})_+}(\mathscr{G}(\mathfrak{b})/\mathfrak{m}\mathscr{G}(\mathfrak{b})) \neq 0$. □

18.3.6 ♯Exercise. Let the situation be as in Lemma 18.3.5, and let $\mathfrak{a}$ be a minimal reduction of $\mathfrak{b}$ (such an $\mathfrak{a}$ certainly exists, by 18.1.12). Show that the graded ideal $\mathfrak{G}(\mathfrak{a})$ of $\mathscr{G}(\mathfrak{b})$ defined in 18.3.4 can be generated by $\operatorname{spr}(\mathfrak{b})$ homogeneous elements of degree 1, and not by fewer.

In order to make further progress, we wish to use the fact that, when $R = \bigoplus_{n \in \mathbb{N}_0} R_n$ is positively graded, homogeneous, and such that $(R_0, \mathfrak{m}_0)$ is local with infinite residue field, and the non-zero graded ideal $\mathfrak{A} = \bigoplus_{n \in \mathbb{N}} \mathfrak{A}_n$ of R is a *reduction of R_+, it is possible to generate $\mathfrak{A}$ by the members of an R_+-filter-regular sequence of length $\dim_{R_0/\mathfrak{m}_0}(\mathfrak{A}_1/\mathfrak{m}_0\mathfrak{A}_1)$. We therefore explain the concept of R_+-filter-regular sequence.

18.3.7 Definition. Assume that R is positively graded, and let M be a non-zero finitely generated graded R-module. Let $f_1, \ldots, f_h$ be a sequence of homogeneous elements of R. We say that $f_1, \ldots, f_h$ is an *R_+-filter-regular sequence with respect to M* if and only if, for all $i = 1, \ldots, h$, we have

$$f_i \notin \bigcup_{\mathfrak{P} \in \operatorname{Ass}(M/(f_1,\ldots,f_{i-1})M) \setminus \operatorname{Var}(R_+)} \mathfrak{P}.$$

We collect some elementary properties of R_+-filter-regular sequences together in the next exercise.

18.3.8 ♯Exercise. Assume that R is positively graded, and let M be a non-zero finitely generated graded R-module and $f_1, \ldots, f_h$ be a sequence of homogeneous elements of R. Show that the following statements are equivalent:

(i) $f_1, \ldots, f_h$ is an R_+-filter-regular sequence with respect to M;

(ii) for all $\mathfrak{P} \in \operatorname{Spec}(R) \setminus \operatorname{Var}(R_+)$, the sequence $f_1/1, \ldots, f_h/1$ of natural images in $R_{\mathfrak{P}}$ is a poor $M_{\mathfrak{P}}$-sequence;

(iii) $((f_1, \ldots, f_{i-1})M :_M f_i)/(f_1, \ldots, f_{i-1})M$ is R_+-torsion for all $i = 1, \ldots, h$;

(iv) $\operatorname{end}\big(((f_1, \ldots, f_{i-1})M :_M f_i)/(f_1, \ldots, f_{i-1})M\big) < \infty$ for $i = 1, \ldots, h$ (the end of a graded R-module was defined in 13.1.1);

(v) f_i is a non-zerodivisor on $\overline{M/(f_1, \ldots, f_{i-1})M}$ for each $i = 1, \ldots, h$, where $\overline{L}$, for an R-module L, denotes $L/\Gamma_{R_+}(L)$.

18.3.9 Exercise. Let the situation be as in 18.3.8, and assume that $f_1, \ldots, f_h$ is an R_+-filter-regular sequence with respect to M. Let $\deg f_i = n_i$ for $i = 1, \ldots, h$. Show that

$$\operatorname{reg}^1\left(M/\textstyle\sum_{i=1}^h f_i M\right) \leq \operatorname{reg}^1(M) + \displaystyle\sum_{i=1}^h n_i - h.$$

We now turn to the construction of R_+-filter-regular sequences.

18.3.10 Proposition. *Assume that $R = \bigoplus_{n \in \mathbb{N}_0} R_n$ is positively graded, that $(R_0, \mathfrak{m}_0)$ is local with infinite residue field $k := R_0/\mathfrak{m}_0$, and that the non-zero graded ideal $\mathfrak{A} = \bigoplus_{n \in \mathbb{N}} \mathfrak{A}_n$ of R is a *reduction of R_+. Let $t := \dim_k(\mathfrak{A}_1/\mathfrak{m}_0\mathfrak{A}_1)$. Then there exist $f_1, \ldots, f_t \in \mathfrak{A}_1$ such that $\mathfrak{A} = \sum_{i=1}^t Rf_i$ and $f_1, \ldots, f_t$ is an R_+-filter-regular sequence with respect to R.*

Proof. Suppose, inductively, that $i \in \mathbb{N}_0$ with $i < t$ and that an R_+-filter-regular sequence (with respect to R) $f_1, \ldots, f_i$ of elements of $\mathfrak{A}_1$ has been constructed such that the natural images of $f_1, \ldots, f_i$ in $\mathfrak{A}_1/\mathfrak{m}_0\mathfrak{A}_1$ are linearly independent in this k-space. This is certainly the case when $i = 0$. Set $\mathfrak{f} := \sum_{j=1}^i Rf_j$. Note that $\mathfrak{m}_0\mathfrak{A} + \mathfrak{f} \neq \mathfrak{A}$ and that $\sqrt{\mathfrak{A}} = \sqrt{R_+}$ by 18.1.2(i). We can use 15.1.3 to see that there exists

$$f_{i+1} \in \mathfrak{A}_1 \setminus \left((\mathfrak{m}_0\mathfrak{A} + \mathfrak{f}) \bigcup \left(\bigcup_{\mathfrak{P} \in \operatorname{Ass}(R/\mathfrak{f}) \setminus \operatorname{Var}(R_+)} \mathfrak{P}\right)\right).$$

Then the extended sequence $f_1, \ldots, f_i, f_{i+1}$ is R_+-filter-regular (with respect to R), and the choice of f_{i+1} ensures that the natural images of $f_1, \ldots, f_i, f_{i+1}$ in $\mathfrak{A}_1/\mathfrak{m}_0\mathfrak{A}_1$ are linearly independent. This completes the inductive step.

In this way, we can construct an R_+-filter-regular sequence (with respect to R) $f_1, \ldots, f_t$ of elements of $\mathfrak{A}_1$ whose natural images in $\mathfrak{A}_1/\mathfrak{m}_0\mathfrak{A}_1$ form a basis

for this k-space. Since $\mathfrak{A}$ can be generated by elements of degree 1, it follows that $f_1, \ldots, f_t$ generate $\mathfrak{A}$. □

We now show that R_+-filter-regular sequences lend themselves to satisfactory calculations with various Castelnuovo regularities. We remind the reader that, when R is positively graded and homogeneous, the regularity $\operatorname{reg}^l(M)$ of M at and above level l (for $l \in \mathbb{N}_0$) of a finitely generated graded R-module M was defined in 15.2.9.

18.3.11 Proposition. *Assume that $R = \bigoplus_{n \in \mathbb{N}_0} R_n$ is positively graded and homogeneous, let M be a non-zero finitely generated graded R-module, and let $f_1, \ldots, f_h \in R_1$ be an R_+-filter-regular sequence with respect to M. Then $\operatorname{reg}^l(M) \leq \operatorname{reg}^{l-h}(M/(f_1, \ldots, f_h)M)$ for all $l \geq h$ and*

$$\operatorname{reg}^h(M) \leq \operatorname{reg}(M/(f_1, \ldots, f_h)M) \leq \operatorname{reg}(M).$$

Proof. We prove this by induction on h, there being nothing to prove when $h = 0$. Suppose, inductively, that $h > 0$, and that both statements in the claim have been proved for smaller values of h. Set $\mathfrak{f} := \sum_{i=1}^{h-1} Rf_i$. By our inductive hypothesis, $\operatorname{reg}^l(M) \leq \operatorname{reg}^{l-h+1}(M/\mathfrak{f}M)$ for all $l \geq h-1$ and $\operatorname{reg}^{h-1}(M) \leq \operatorname{reg}(M/\mathfrak{f}M) \leq \operatorname{reg}(M)$.

Since $(\mathfrak{f}M :_M f_h)/\mathfrak{f}M$ is R_+-torsion, we have $H^j_{R_+}((\mathfrak{f}M :_M f_h)/\mathfrak{f}M) = 0$ for all $j \in \mathbb{N}$, by 2.1.7(i); therefore, the canonical epimorphism $\pi : M/\mathfrak{f}M \longrightarrow M/(\mathfrak{f}M :_M f_h)$ induces homogeneous isomorphisms

$$H^j_{R_+}(\pi) : H^j_{R_+}(M/\mathfrak{f}M) \xrightarrow{\cong} H^j_{R_+}(M/(\mathfrak{f}M :_M f_h)) \qquad \text{for all } j \in \mathbb{N}.$$

Hence $\operatorname{reg}^l(M/\mathfrak{f}M) = \operatorname{reg}^l(M/(\mathfrak{f}M :_M f_h))$ for all $l \in \mathbb{N}$.

Multiplication by f_h leads to an exact sequence

$$0 \longrightarrow (M/(\mathfrak{f}M :_M f_h))(-1) \longrightarrow M/\mathfrak{f}M \longrightarrow M/(\mathfrak{f} + Rf_h)M \longrightarrow 0$$

of graded R-modules and homogeneous homomorphisms. By 15.2.15(iv) and the inductive hypothesis,

$$\begin{aligned}
&\operatorname{reg}(M/(\mathfrak{f} + Rf_h)M) \\
&\qquad \leq \max\left\{\operatorname{reg}^1((M/(\mathfrak{f}M :_M f_h))(-1)) - 1, \operatorname{reg}(M/\mathfrak{f}M)\right\} \\
&\qquad = \max\left\{\operatorname{reg}^1(M/\mathfrak{f}M), \operatorname{reg}(M/\mathfrak{f}M)\right\} = \operatorname{reg}(M/\mathfrak{f}M) \\
&\qquad \leq \operatorname{reg}(M).
\end{aligned}$$

We can also apply 15.2.15(ii) to deduce that, for $l \geq h$,

$$\begin{aligned}
\operatorname{reg}^{l-h+1}(M/\mathfrak{f}M) &= \operatorname{reg}^{l-h+1}((M/(\mathfrak{f}M :_M f_h))(-1)) - 1 \\
&\leq \max\left\{\operatorname{reg}^{l-h+1}(M/\mathfrak{f}M) - 1, \operatorname{reg}^{l-h}(M/(\mathfrak{f} + Rf_h)M)\right\},
\end{aligned}$$

so that $\operatorname{reg}^{l-h+1}(M/\mathfrak{f}M) \leq \operatorname{reg}^{l-h}(M/(\mathfrak{f}+Rf_h)M)$. We can therefore use the inductive hypothesis to see that

$$\operatorname{reg}^l(M) \leq \operatorname{reg}^{l-h+1}(M/\mathfrak{f}M) \leq \operatorname{reg}^{l-h}(M/(\mathfrak{f}+Rf_h)M) \qquad \text{for all } l \geq h.$$

In particular, $\operatorname{reg}^h(M) \leq \operatorname{reg}(M/(\mathfrak{f}+Rf_h)M)$, and so this completes the inductive step. □

18.3.12 Theorem (see N. V. Trung [65, Proposition 3.2]). *Assume that* $(R, \mathfrak{m})$ *is local and that* $k := R/\mathfrak{m}$ *is infinite. Suppose that* $\mathfrak{b}$ *is proper, and set* $s := \operatorname{spr}(\mathfrak{b})$. *Let* $\mathfrak{a}$ *be a minimal reduction of* $\mathfrak{b}$. *Then*

$$\operatorname{reg}^s(\mathcal{G}(\mathfrak{b})) \leq r_{\mathfrak{a}}(\mathfrak{b}) \leq \operatorname{reg}(\mathcal{G}(\mathfrak{b})).$$

Proof. By 18.3.4, and with the notation of that lemma, $\mathfrak{G}(\mathfrak{a})$ is a *reduction of $\mathcal{G}(\mathfrak{b})_+$, so that $\mathcal{G}(\mathfrak{b})/\mathfrak{G}(\mathfrak{a})$ is $\mathcal{G}(\mathfrak{b})_+$-torsion and (by 18.3.2)

$$r_{\mathfrak{a}}(\mathfrak{b}) = r_{\mathfrak{G}(\mathfrak{a})}(\mathcal{G}(\mathfrak{b})_+) = \operatorname{end}(\mathcal{G}(\mathfrak{b})/\mathfrak{G}(\mathfrak{a})).$$

Note that, by 2.1.7(i), we have $H^i_{\mathcal{G}(\mathfrak{b})_+}(\mathcal{G}(\mathfrak{b})/\mathfrak{G}(\mathfrak{a})) = 0$ for all $i \in \mathbb{N}$, and so

$$r_{\mathfrak{a}}(\mathfrak{b}) = \operatorname{end}(\mathcal{G}(\mathfrak{b})/\mathfrak{G}(\mathfrak{a})) = \operatorname{reg}(\mathcal{G}(\mathfrak{b})/\mathfrak{G}(\mathfrak{a})).$$

Next, we observe from 18.3.6 that $\mathfrak{G}(\mathfrak{a})$ can be generated by $s := \operatorname{spr}(\mathfrak{b})$ homogeneous elements of degree 1, and not by fewer. Therefore, by 18.3.3 and 18.3.10, there exists in $\mathfrak{G}(\mathfrak{a})$ a $\mathcal{G}(\mathfrak{b})_+$-filter-regular sequence (with respect to $\mathcal{G}(\mathfrak{b})$) $f_1, \ldots, f_s$ of elements of degree 1 which generate this ideal. Consequently, by Proposition 18.3.11, we have

$$\operatorname{reg}^s(\mathcal{G}(\mathfrak{b})) \leq \operatorname{reg}(\mathcal{G}(\mathfrak{b})/\mathfrak{G}(\mathfrak{a})) \leq \operatorname{reg}(\mathcal{G}(\mathfrak{b}))$$

and this completes the proof because we have already shown that $r_{\mathfrak{a}}(\mathfrak{b}) = \operatorname{reg}(\mathcal{G}(\mathfrak{b})/\mathfrak{G}(\mathfrak{a}))$. □

We are now going to use Trung's Theorem 18.3.12 to derive a theorem due to L. T. Hoa, which shows that, in the situation of Trung's Theorem, for $t \in \mathbb{N}$ sufficiently large, the reduction number of $\mathfrak{b}^t$ with respect to a minimal reduction of $\mathfrak{b}^t$ is independent of the choice of minimal reduction and independent of t. We need one preparatory result, also due to Hoa.

18.3.13 Proposition (L. T. Hoa [26, Lemma 2.4]). *Assume that* $(R, \mathfrak{m})$ *is local and that* $k := R/\mathfrak{m}$ *is infinite. Suppose that* $\mathfrak{b}$ *is proper, and assume that* $s := \operatorname{spr}(\mathfrak{b}) \geq 1$. *For* $q \in \mathbb{Q}$, *we use* $[q]$ *to denote* $\max\{i \in \mathbb{Z} : i \leq q\}$; *we interpret* $[q]$ *as* $-\infty$ *when* $q = -\infty$. *Let* $t \in \mathbb{N}$. *Then*

(i) $\operatorname{end}\left(H^j_{\mathcal{G}(\mathfrak{b}^t)_+}(\mathcal{G}(\mathfrak{b}^t))\right) \leq \left[\operatorname{end}\left(H^j_{\mathcal{G}(\mathfrak{b})_+}(\mathcal{G}(\mathfrak{b}))\right)\Big/ t\right]$ *for all* $j \in \mathbb{N}_0$; *and*

(ii) $\operatorname{end}\left(H^s_{\mathscr{G}(\mathfrak{b}^t)_+}(\mathscr{G}(\mathfrak{b}^t))\right) = \left[\operatorname{end}\left(H^s_{\mathscr{G}(\mathfrak{b})_+}(\mathscr{G}(\mathfrak{b}))\right)\Big/ t\right]$.

Proof. By 18.2.2 and 18.3.5, we have

$$\operatorname{end}\left(H^j_{\mathscr{G}(\mathfrak{b}^t)_+}(\mathscr{G}(\mathfrak{b}^t))\right) = \operatorname{end}\left(H^j_{\mathscr{G}(\mathfrak{b})_+}(\mathscr{G}(\mathfrak{b}))\right) = -\infty \quad \text{for all } j > s.$$

The inequality in part (i) is therefore certainly true when $j > s$.

Now consider the case where $0 \leq j \leq s$, and let $i \in \mathbb{N}_0$ with $i \leq t$. The extension $\mathfrak{b}^i\mathscr{G}(\mathfrak{b}^t)$ of $\mathfrak{b}^i$ to $\mathscr{G}(\mathfrak{b}^t)$ under the composition $R \to R/\mathfrak{b}^t \to \mathscr{G}(\mathfrak{b}^t)$ of canonical ring homomorphisms is a graded ideal of $\mathscr{G}(\mathfrak{b}^t)$ with grading given by

$$\mathfrak{b}^i\mathscr{G}(\mathfrak{b}^t) = \bigoplus_{n\in\mathbb{N}_0} \mathfrak{b}^{tn+i}/\mathfrak{b}^{t(n+1)}.$$

Note that $\mathfrak{b}^t\mathscr{G}(\mathfrak{b}^t) = 0$. Our strategy is to consider the chain of submodules

$$\mathscr{G}(\mathfrak{b}^t) = \mathfrak{b}^0\mathscr{G}(\mathfrak{b}^t) \supseteq \ldots \supseteq \mathfrak{b}^r\mathscr{G}(\mathfrak{b}^t) \supseteq \mathfrak{b}^{r+1}\mathscr{G}(\mathfrak{b}^t) \supseteq \ldots \supseteq \mathfrak{b}^t\mathscr{G}(\mathfrak{b}^t) = 0,$$

and to obtain information about the 'subquotients' in the chain by use of Veronesean functors (see 12.4.6).

There is a natural homogeneous surjective ring homomorphism $\theta : \mathscr{G}(\mathfrak{b}^t) \longrightarrow (\mathscr{G}(\mathfrak{b}))^{(t)}$, and so any graded $\mathscr{G}(\mathfrak{b})^{(t)}$-module can be regarded as a graded $\mathscr{G}(\mathfrak{b}^t)$-module by means of θ. This applies, in particular, to

$$(\mathscr{G}(\mathfrak{b}))^{(t,i)} = \bigoplus_{n\in\mathbb{N}_0} \mathfrak{b}^{tn+i}/\mathfrak{b}^{tn+i+1}.$$

It follows that, for $i < t$, there is an exact sequence

$$0 \longrightarrow \mathfrak{b}^{i+1}\mathscr{G}(\mathfrak{b}^t) \longrightarrow \mathfrak{b}^i\mathscr{G}(\mathfrak{b}^t) \longrightarrow (\mathscr{G}(\mathfrak{b}))^{(t,i)} \longrightarrow 0$$

of graded $\mathscr{G}(\mathfrak{b}^t)$-modules and homogeneous homomorphisms.

Let $r \in \mathbb{Z}$ with $r > \left[\operatorname{end}\left(H^j_{\mathscr{G}(\mathfrak{b})_-}(\mathscr{G}(\mathfrak{b}))\right)\Big/ t\right]$. It follows from the Graded Independence Theorem 13.1.6 and 12.4.6(v) that there are homogeneous $\mathscr{G}(\mathfrak{b}^t)$-isomorphisms

$$H^j_{\mathscr{G}(\mathfrak{b}^t)_+}((\mathscr{G}(\mathfrak{b}))^{(t,i)}) \xrightarrow{\cong} H^j_{\mathscr{G}(\mathfrak{b})^{(t)}_+}((\mathscr{G}(\mathfrak{b}))^{(t,i)}) \xrightarrow{\cong} \left(H^j_{\mathscr{G}(\mathfrak{b})_+}(\mathscr{G}(\mathfrak{b}))\right)^{(t,i)}.$$

Hence

$$H^j_{\mathscr{G}(\mathfrak{b}^t)_+}((\mathscr{G}(\mathfrak{b}))^{(t,i)})_r \cong H^j_{\mathscr{G}(\mathfrak{b})_+}(\mathscr{G}(\mathfrak{b}))_{rt+i} = 0,$$

since $rt + i > \operatorname{end}(H^j_{\mathscr{G}(\mathfrak{b})_+}(\mathscr{G}(\mathfrak{b})))$. Therefore the short exact sequence displayed in the last paragraph induces an $R/\mathfrak{b}^t$-epimorphism

$$H^j_{\mathscr{G}(\mathfrak{b}^t)_+}(\mathfrak{b}^{i+1}\mathscr{G}(\mathfrak{b}^t))_r \longrightarrow H^j_{\mathscr{G}(\mathfrak{b}^t)_+}(\mathfrak{b}^i\mathscr{G}(\mathfrak{b}^t))_r.$$

Since $\mathfrak{b}^t\mathscr{G}(\mathfrak{b}^t) = 0$, we can therefore deduce by descending induction that $H^j_{\mathscr{G}(\mathfrak{b}^t)_+}(\mathfrak{b}^i\mathscr{G}(\mathfrak{b}^t))_r = 0$ for $i = t-1, \ldots, 1, 0$. Hence $H^j_{\mathscr{G}(\mathfrak{b}^t)_+}(\mathscr{G}(\mathfrak{b}^t))_r = 0$. Hence $\operatorname{end}\left(H^j_{\mathscr{G}(\mathfrak{b}^t)_+}(\mathscr{G}(\mathfrak{b}^t))\right) \leq \left[\operatorname{end}\left(H^j_{\mathscr{G}(\mathfrak{b})_+}(\mathscr{G}(\mathfrak{b}))\right)/t\right]$.

Now consider the case where $j = s$. Let $u := \left[\operatorname{end}\left(H^s_{\mathscr{G}(\mathfrak{b})_+}(\mathscr{G}(\mathfrak{b}))\right)/t\right]$. Thus $\operatorname{end}(H^s_{\mathscr{G}(\mathfrak{b})_+}(\mathscr{G}(\mathfrak{b}))) = ut + i$ for some integer i with $0 \leq i \leq t-1$. Recall from 18.3.5 that s is the greatest integer i such that $H^i_{\mathscr{G}(\mathfrak{b})_+}(\mathscr{G}(\mathfrak{b})) \neq 0$. It therefore follows from 15.2.5 that $H^s_{\mathscr{G}(\mathfrak{b})_+}(\mathscr{G}(\mathfrak{b}))_n \neq 0$ for all $n \leq ut+i$, and so, in particular, for $n = ut$. Recall also, from 18.2.2 and 18.3.5, that $s = \operatorname{ara}(\mathscr{G}(\mathfrak{b}^t)_+)$. It therefore follows from the exact sequence

$$0 \longrightarrow \mathfrak{b}\mathscr{G}(\mathfrak{b}^t) \longrightarrow \mathscr{G}(\mathfrak{b}^t) \longrightarrow (\mathscr{G}(\mathfrak{b}))^{(t,0)} \longrightarrow 0$$

of graded $\mathscr{G}(\mathfrak{b}^t)$-modules and homogeneous homomorphisms that there is an exact sequence of $R/\mathfrak{b}^t$-modules

$$H^s_{\mathscr{G}(\mathfrak{b}^t)_+}(\mathscr{G}(\mathfrak{b}^t))_u \longrightarrow H^s_{\mathscr{G}(\mathfrak{b})_+}(\mathscr{G}(\mathfrak{b}))_{ut} \longrightarrow 0.$$

Hence $H^s_{\mathscr{G}(\mathfrak{b}^t)_+}(\mathscr{G}(\mathfrak{b}^t))_u \neq 0$, and $\operatorname{end}\left(H^s_{\mathscr{G}(\mathfrak{b}^t)_+}(\mathscr{G}(\mathfrak{b}^t))\right) \geq u$. This, in conjunction with the result of part (i), completes the proof. □

We are now ready to present Hoa's proof of his theorem, mentioned in the introduction to this chapter, about the asymptotic behaviour, with respect to reduction numbers, of powers of a proper ideal of a local ring having infinite residue field. We remark again that there is no mention of local cohomology in the statement of the theorem, but the powerful tool of graded local cohomology plays a major rôle in the proof.

18.3.14 Theorem (L. T. Hoa [26, Theorem 2.1]). *Assume that $(R, \mathfrak{m})$ is local and that $R/\mathfrak{m}$ is infinite. Suppose that $\mathfrak{b}$ is proper. Then there exist $t_0 \in \mathbb{N}$ and $c \in \mathbb{N}_0$ such that, for all $t > t_0$ and every minimal reduction $\mathfrak{a}$ of $\mathfrak{b}^t$, we have $r_{\mathfrak{a}}(\mathfrak{b}^t) = c$.*

Proof. Let $s := \operatorname{spr}(\mathfrak{b})$. If $s = 0$, then $\mathfrak{b}$ is nilpotent, and the result is obvious because the only minimal reduction of the zero ideal of R is the zero ideal itself. We therefore assume that $s \geq 1$ for the remainder of this proof. Set $t_0 := \max\{|\operatorname{end}(H^i_{\mathscr{G}(\mathfrak{b})_+}(\mathscr{G}(\mathfrak{b})))| : i \in \mathbb{N}_0 \text{ and } H^i_{\mathscr{G}(\mathfrak{b})_+}(\mathscr{G}(\mathfrak{b})) \neq 0\}$. Note that $t_0 \in \mathbb{N}_0$, by 18.3.5.

Suppose that $t \in \mathbb{N}$ with $t > t_0$. By Proposition 18.3.13, we have

$$\operatorname{end}\left(H^i_{\mathscr{G}(\mathfrak{b}^t)_+}(\mathscr{G}(\mathfrak{b}^t))\right) \leq 0 \quad \text{for } i = 0, \ldots, s-1$$

and

$$\operatorname{end}\left(H^s_{\mathscr{G}(\mathfrak{b}^t)_+}(\mathscr{G}(\mathfrak{b}^t))\right) = \begin{cases} 0 & \text{if } \operatorname{end}\left(H^s_{\mathscr{G}(\mathfrak{b})_+}(\mathscr{G}(\mathfrak{b}))\right) \geq 0, \\ -1 & \text{if } \operatorname{end}\left(H^s_{\mathscr{G}(\mathfrak{b})_+}(\mathscr{G}(\mathfrak{b}))\right) < 0. \end{cases}$$

Of course, $H^i_{\mathscr{G}(\mathfrak{b}^t)_+}(\mathscr{G}(\mathfrak{b}^t)) = 0$ for all $i > s$, by 18.2.2 and 18.3.5. Hence

$$\operatorname{reg}^s(\mathscr{G}(\mathfrak{b}^t)) = \operatorname{reg}(\mathscr{G}(\mathfrak{b}^t)) = \begin{cases} s & \text{if } \operatorname{end}\left(H^s_{\mathscr{G}(\mathfrak{b})_+}(\mathscr{G}(\mathfrak{b}))\right) \geq 0, \\ s-1 & \text{if } \operatorname{end}\left(H^s_{\mathscr{G}(\mathfrak{b})_+}(\mathscr{G}(\mathfrak{b}))\right) < 0. \end{cases}$$

The result now follows from Trung's Theorem 18.3.12. □

18.3.15 Exercise. Assume that $(R, \mathfrak{m})$ is local and that $R/\mathfrak{m}$ is infinite; let $\dim R = d$. Suppose that $\mathfrak{q}$ is an $\mathfrak{m}$-primary ideal of R such that $\mathscr{G}(\mathfrak{q})$ is Cohen-Macaulay. Show that each minimal reduction $\mathfrak{q}'$ of $\mathfrak{q}$ has $r_{\mathfrak{q}'}(\mathfrak{q}) = \operatorname{end}\left(H^d_{\mathscr{G}(\mathfrak{q})_+}(\mathscr{G}(\mathfrak{q}))\right) + d$.

As was mentioned in the introduction to this chapter, we have only been able to present a small portion of recent work linking graded local cohomology and reductions of ideals. An interested reader might like to consult, in addition to papers already cited in this chapter, T. Marley's paper [33], and some of the papers referred to therein.

19

Connectivity in algebraic varieties

The study of the topological connectivity of algebraic sets is a fundamental subject in algebraic geometry. Local cohomology is a powerful tool in this field. In this chapter we shall use this tool to prove some results on connectivity which are of basic significance. Our main result will be the Connectedness Bound for Complete Local Rings, a refinement of Grothendieck's Connectedness Theorem. We shall apply this result to projective varieties in order to obtain a refined version of the Bertini-Gothendieck Connectivity Theorem. Another central result of this chapter will be the Intersection Inequality for Connectedness Dimensions of Affine Algebraic Cones. As an application it will furnish a refined version of the Connectedness Theorem for Projective Varieties due to W. Barth, to W. Fulton and J. Hansen, and to G. Faltings. The final goal of the chapter will be a ring-theoretic version of Zariski's Main Theorem.

The crucial appearances of local cohomology in this chapter are just in two proofs, but the resulting far-reaching consequences in algebraic geometry illustrate again the power of local cohomology as a tool in the subject. We shall use little more from local cohomology than the Mayer-Vietoris Sequence 3.2.3 and its graded version 13.1.4, the Lichtenbaum-Hartshorne Vanishing Theorem 8.2.1 and the graded version 13.1.16, and the vanishing result of 3.3.3. The use of these techniques in this context originally goes back to Hartshorne [21] and has been pushed further by J. Rung (see [5]).

19.1 The connectedness dimension

To begin, we have to introduce a measure for the connectivity of an algebraic set, or, more generally, of a Noetherian topological space. We start with some reminders of topological concepts which are fundamental to our work in this chapter.

19.1.1 Reminders. (i) Recall that a non-empty topological space is said to be *disconnected* precisely when it can be expressed as the disjoint union of two proper open (or closed) subsets. Otherwise the space is said to be *connected*. We adopt the convention whereby the empty set is considered to be disconnected.

(ii) Recall also that a topological space T is said to be *quasi-compact* precisely when every open covering of T has a finite subcovering, that is, if and only if, whenever $(U_\alpha)_{\alpha\in\Lambda}$ is a family of open subsets of T such that $T = \bigcup_{\alpha\in\Lambda} U_\alpha$, then there is a finite subset Φ of Λ such that $T = \bigcup_{\alpha\in\Phi} U_\alpha$.

Recall that a non-empty topological space T is said to be irreducible precisely when T is not the union of two proper closed subsets, that is, if and only if every pair of non-empty open subsets of T has non-empty intersection.

19.1.2 ♯Exercise. Let T be a non-empty topological space.

(i) Show that the following statements are equivalent:

(a) T is irreducible;

(b) every non-empty open subset of T is dense in T;

(c) every non-empty open subset of T is connected.

(ii) Let S be an irreducible subset of T (that is, a subset of T which is an irreducible space in the topology induced from T), and let $(C_i)_{1\le i\le n}$ be a finite covering of S by closed subsets of T (so that $C_1,\dots,C_n$ are closed subsets of T such that $S \subseteq \bigcup_{i=1}^n C_i$). Show that $S \subseteq C_i$ for some i with $1 \le i \le n$.

(iii) Show that, if T is irreducible, then every non-empty open subset of T is irreducible.

(iv) Let $(U_i)_{1\le i\le n}$ be a finite open covering of T, with $U_i \neq \emptyset$ for all $i = 1,\dots,n$. Prove that T is irreducible if and only if U_i is irreducible for all $i = 1,\dots,n$ and $U_i \cap U_j \neq \emptyset$ for all $i, j = 1,\dots,n$.

(v) Let S be a subset of T. Show that S is irreducible if and only if its closure $\overline{S}$ is irreducible.

(vi) Let T' be a second topological space and let $f : T \to T'$ be a continuous map. Show that if T is irreducible, then so too is $f(T)$.

19.1.3 ♯Exercise and Definition. Use Zorn's Lemma to show that a non-empty topological space T has maximal irreducible subsets.

The maximal irreducible subsets of T are called its *irreducible components*.

Show that the irreducible components of T are closed and that they cover T; show also that every irreducible subset of T is contained in an irreducible component of T.

19.1.4 ♯Exercise. Let K be an algebraically closed field, and let $r \in \mathbb{N}$.

(i) Show that the irreducible components of an affine algebraic cone in $\mathbb{A}^r(K)$ (see 14.1.2(i)) are again affine algebraic cones.

(ii) Let W be a non-empty closed subset of $\mathbb{P}^r(K)$; suppose that the distinct irreducible components of W are $W_1, \ldots, W_n$. Show that $\mathrm{Cone}(W)$ (see 14.2.1(iii)) has $\mathrm{Cone}(W_1), \ldots, \mathrm{Cone}(W_n)$ as its (distinct) irreducible components.

19.1.5 Definition. Let T be a topological space. We say that T is a *Noetherian* topological space precisely when it satisfies the following equivalent conditions.

(i) Whenever $(C_i)_{i \in \mathbb{N}}$ is a family of closed subsets of T such that

$$C_1 \supseteq C_2 \supseteq \ldots \supseteq C_i \supseteq C_{i+1} \supseteq \ldots,$$

then there exists $k \in \mathbb{N}$ such that $C_k = C_{k+i}$ for all $i \in \mathbb{N}$.

(ii) Every non-empty set of closed subsets of T contains a minimal element with respect to inclusion.

19.1.6 ♯Exercise. (i) Let T be a topological space. Show that T is Noetherian if and only if every open subset of T is quasi-compact.

(ii) Show that the spectrum of a commutative Noetherian ring, furnished with its Zariski topology, is a Noetherian topological space.

(iii) Show that a quasi-affine variety over an algebraically closed field (see 2.3.1) is a Noetherian topological space.

19.1.7 Lemma. *Let T be a non-empty Noetherian topological space. Then T has only finitely many irreducible components. Also, if $T_1, \ldots, T_n$ are the distinct irreducible components of T, then*

$$T_j \nsubseteq \bigcup_{\substack{i=1 \\ i \neq j}}^{n} T_i \qquad \textit{for all } j = 1, \ldots, n.$$

Proof. Suppose that T has infinitely many irreducible components. Let $\mathscr{S}$ be the set of non-empty closed subsets of T which have infinitely many irreducible components. Since T is Noetherian, $\mathscr{S}$ has a minimal member: let C be one such. Then C itself cannot be irreducible, so that C can be written as $C = C_1 \cup C_2$ for some proper closed subsets C_1 and C_2 of C. Note that C_1 and C_2 are closed in T, and so, by the minimality of C, each of C_1 and C_2 has only finitely many irreducible components. But, by 19.1.2(ii), each irreducible subset of C must be contained in C_1 or C_2, and so each irreducible component of C must be an irreducible component of C_1 or C_2 (by 19.1.3). Hence there can only be finitely many irreducible components of C, a contradiction.

The final claim follows easily from another use of 19.1.2(ii) since, by 19.1.3, each T_i $(1 \leq i \leq n)$ is closed in T. □

19.1.8 Definition. Let T be a non-empty Noetherian topological space. The *dimension of* T, denoted by $\dim T$, is defined as the supremum of the lengths n of all strictly descending chains $Z_0 \supset Z_1 \supset \cdots \supset Z_n$ of closed irreducible subsets of T if this supremum exists, and ∞ otherwise. Thus, by 19.1.3, $\dim T$ is a non-negative integer or ∞.

The dimension of the empty space is defined to be -1.

Note that, for our Noetherian ring R, we have $\dim(\operatorname{Spec}(R)) = \dim R$; thus, in view of [39, Appendix, Example 1], the dimension of a Noetherian topological space can be ∞.

19.1.9 Definition. Let T be a Noetherian topological space. The *connectedness dimension* $c(T)$ of T is defined to be the minimum of the dimensions of those closed subsets Z of T for which $T \setminus Z$ is disconnected. (Observe that $T \setminus T$ is certainly disconnected!) Thus

$$c(T) := \min\{\dim Z : Z \subseteq T,\ Z \text{ is closed and } T \setminus Z \text{ is disconnected}\}.$$

For our Noetherian ring R, we write $c(R) := c(\operatorname{Spec}(R))$.

19.1.10 Examples. Let T be a Noetherian topological space.

(i) Note that T is disconnected, that is, $T \setminus \emptyset$ is disconnected, if and only if $c(T) = -1$. We can thus conclude that $c(T)$ is negative if and only if T is disconnected.

(ii) It follows from part (i) that if $(R, \mathfrak{m})$ is local, then $c(R) \geq 0$.

(iii) Suppose that T is irreducible. Then if Z is a proper closed subset of T, it is impossible for $T \setminus Z$ to be disconnected (by 19.1.2(i)); on the other hand, $T \setminus T$ is disconnected. Thus $c(T) = \dim T$ in this case.

(iv) It follows from part (iii) that, if R is an integral domain, then $c(R) = \dim R$. Thus, in view of [39, Appendix, Example 1], the connectedness dimension of a Noetherian topological space can be ∞.

19.1.11 Example. Assume that $(R, \mathfrak{m})$ is local, and has exactly two minimal prime ideals, $\mathfrak{p}$ and $\mathfrak{q}$. Then $c(R) = 0$ if and only if $\dim R/(\mathfrak{p} + \mathfrak{q}) = 0$.

Proof. Note that the hypotheses ensure that $\dim R > 0$.

($\Leftarrow$) We have $\operatorname{Spec}(R) = \operatorname{Var}(\mathfrak{p}) \cup \operatorname{Var}(\mathfrak{q})$. Since $\mathfrak{m}$ is the only prime ideal of R which contains both $\mathfrak{p}$ and $\mathfrak{q}$, it follows that

$$\operatorname{Var}(\mathfrak{p}) \cap \big(\operatorname{Spec}(R) \setminus \{\mathfrak{m}\}\big) \qquad \text{and} \qquad \operatorname{Var}(\mathfrak{q}) \cap \big(\operatorname{Spec}(R) \setminus \{\mathfrak{m}\}\big)$$

are two non-empty disjoint closed subsets of $\mathrm{Spec}(R) \setminus \{\mathfrak{m}\}$ which cover this space. Therefore, bearing in mind 19.1.10(ii), we see that $c(R) = 0$.

($\Rightarrow$) Assume that $c(R) = 0$. Thus there is a closed subset Z of $\mathrm{Spec}(R)$ for which $\dim Z = 0$ and $\mathrm{Spec}(R) \setminus Z$ is disconnected. We must have $Z = \{\mathfrak{m}\}$. Set $T := \mathrm{Spec}(R) \setminus \{\mathfrak{m}\}$. Thus there exist ideals $\mathfrak{a}$, $\mathfrak{b}$ of R such that $T \cap \mathrm{Var}(\mathfrak{a})$ and $T \cap \mathrm{Var}(\mathfrak{b})$ are non-empty disjoint subsets of T which cover T.

Then $\mathfrak{p} \supseteq \mathfrak{a}$ or $\mathfrak{p} \supseteq \mathfrak{b}$; also $\mathfrak{q} \supseteq \mathfrak{a}$ or $\mathfrak{q} \supseteq \mathfrak{b}$. For the sake of argument, let us assume that $\mathfrak{p} \supseteq \mathfrak{a}$.

Then $\mathfrak{q} \not\supseteq \mathfrak{a}$, since otherwise $\mathrm{Spec}(R) = \mathrm{Var}(\mathfrak{a})$ and $T \cap \mathrm{Var}(\mathfrak{b}) = \emptyset$. Therefore $\mathfrak{q} \supseteq \mathfrak{b}$, and it follows that $(T \cap \mathrm{Var}(\mathfrak{p})) \cap (T \cap \mathrm{Var}(\mathfrak{q})) = \emptyset$; from this we deduce that $\dim R/(\mathfrak{p} + \mathfrak{q}) = 0$. $\square$

19.1.12 Exercise. Let f, g be non-constant, irreducible polynomials in $\mathbb{C}[X, Y]$ which are not associates of each other. Let $T := V_{\mathbb{A}^2}(fg)$. Show that

$$c(T) = \begin{cases} -1 & \text{if } V_{\mathbb{A}^2}(f) \cap V_{\mathbb{A}^2}(g) = \emptyset, \\ 0 & \text{otherwise.} \end{cases}$$

19.1.13 Notation and ♯Exercise. Assume that $(R, \mathfrak{m})$ is local. The topological space $\mathrm{Spec}(R) \setminus \{\mathfrak{m}\}$, with the topology induced from the Zariski topology on $\mathrm{Spec}(R)$, is called the *punctured spectrum of* R, and denoted by $\mathring{\mathrm{Spec}}(R)$. Show that $c(\mathring{\mathrm{Spec}}(R)) = c(R) - 1$.

19.1.14 Notation. For $r \in \mathbb{N}$, denote by $\mathscr{S}(r)$ the set of all ordered pairs (A, B) of non-empty subsets of $\{1, \ldots, r\}$ for which $A \cup B = \{1, \ldots, r\}$.

19.1.15 Lemma. *Let T be a non-empty Noetherian topological space with (distinct) irreducible components $T_1, \ldots, T_r$. Then, with the notation of* 19.1.14,

$$c(T) = \min \left\{ \dim \left(\left(\bigcup_{i \in A} T_i \right) \cap \left(\bigcup_{j \in B} T_j \right) \right) : (A, B) \in \mathscr{S}(r) \right\}.$$

Proof. We write $c = c(T)$ and m for the minimum that occurs on the right hand side of the display in the above statement.

We first show that $c \geq m$. To achieve this, let Z be a closed subset of T with $\dim Z = c$ and such that $T \setminus Z$ is disconnected. If $T_i \subseteq Z$ for some $i \in \{1, \ldots, r\}$, then $c = \dim Z \geq \dim T_i \geq m$. Thus we can, and do, assume that $T_i \cap (T \setminus Z) \neq \emptyset$ for all $i \in \{1, \ldots, r\}$. As $T \setminus Z$ is disconnected we can write $T \setminus Z = U_1 \cup U_2$, where U_1 and U_2 are non-empty open sets in T such that $U_1 \cap U_2 = \emptyset$. Set

$$A := \{i \in \{1, \ldots, r\} : T_i \cap U_1 \neq \emptyset\}, \quad B := \{j \in \{1, \ldots, r\} : T_j \cap U_2 \neq \emptyset\}.$$

Then, the pair $(A, B) \in \mathscr{S}(r)$. Moreover, A and B are disjoint, as otherwise for any index $i \in A \cap B$ the irreducible space T_i would contain the two non-empty and disjoint open subsets $T_i \cap U_1$ and $T_i \cap U_2$. This shows that $\left(\bigcup_{i\in A} T_i\right) \cap \left(\bigcup_{j\in B} T_j\right)$ has no point in common with $U_1 \cup U_2$, so that it is contained in Z and has dimension not exceeding c. This proves that $c \geq m$.

To prove the inequality $m \geq c$, let $(A, B) \in \mathscr{S}(r)$ be a pair such that $Z := \left(\bigcup_{i\in A} T_i\right) \cap \left(\bigcup_{j\in B} T_j\right)$ is of dimension m. If $r = 1$, we have $m = \dim T \geq c$, as required. Assume therefore that $r > 1$. Then, by the minimality in the definition of m, we can, and do, assume that A and B are disjoint. Then the open sets $U_1 = T \setminus \bigcup_{i\in A} T_i$ and $U_2 = T \setminus \bigcup_{j\in B} T_j$ are non-empty. Note that $U_1 \cap U_2 = \emptyset$, since $\left(\bigcup_{i\in A} T_i\right) \cup \left(\bigcup_{j\in B} T_j\right) = T$. Hence $T \setminus Z = U_1 \cup U_2$ is disconnected. Consequently $c \leq \dim Z = m$. □

19.1.16 ♯Exercise. Let V be an affine variety over the algebraically closed field K. Let $\mathfrak{b}$ be an ideal of $\mathscr{O}(V)$, and let $V(\mathfrak{b})$ denote the closed subset of V determined by $\mathfrak{b}$. Show that $c(V(\mathfrak{b})) = c(\mathscr{O}(V)/\mathfrak{b})$.

19.2 Complete local rings and connectivity

We now introduce another invariant of Noetherian spaces.

19.2.1 Definition. Let T be a non-empty Noetherian topological space. The *subdimension* $\operatorname{sdim} T$ of T is defined as the minimum of the dimensions of the irreducible components of T. For our Noetherian ring R, we write $\operatorname{sdim} R$ instead of $\operatorname{sdim}(\operatorname{Spec}(R))$.

Notice the following easy fact.

19.2.2 Lemma. *Let T be a non-empty Noetherian topological space of finite dimension. Then $c(T) \leq \operatorname{sdim} T$. Moreover, equality holds here if and only if T is irreducible.*

Proof. Let $T_1, \ldots, T_r$ be the irreducible components of T. Then

$$\operatorname{sdim} T = \min\{\dim T_i : i = 1, \ldots, r\};$$

also, we have, by 19.1.7, for each $j = 1, \ldots, r$, that

$$T_j \cap \left(\bigcup_{\substack{i=1\\ i\neq j}}^{r} T_i\right) \subset T_j,$$

so that, since T has finite dimension,

$$\dim\left(T_j \cap \left(\bigcup_{\substack{i=1\\ i\neq j}}^{r} T_i\right)\right) < \dim T_j.$$

The claims now follow easily from Lemma 19.1.15. □

19.2.3 Exercise. Calculate $c(T)$ and $\operatorname{sdim} T$ for the following choices of the Noetherian topological space T:

(i) $T := V_{\mathbb{A}^3}(X_1^2 - X_1, X_2^2 - X_2)$;

(ii) $T := V_{\mathbb{A}^4}(X_1X_3, X_1X_4, X_2X_3, X_2X_4)$;

(iii) $T := V_{\mathbb{A}^3}((X_1 - 1)(X_1^2 + X_2^2 + X_3^2 - 1))$.

19.2.4 ♯Exercise. Assume that $(R, \mathfrak{m})$ is local and that $\dim R > 0$. Show that the subdimension of the punctured spectrum $\mathring{\operatorname{Spec}}(R)$ of R (see 19.1.13) is given by $\operatorname{sdim}(\mathring{\operatorname{Spec}}(R)) = \operatorname{sdim} R - 1$.

19.2.5 Remark. We shall frequently consider connectedness dimensions and subdimensions of spectra of Noetherian rings. Therefore it will be helpful to translate the previous lemmas into ring-theoretic terms. So, let $\mathfrak{p}_1, \ldots, \mathfrak{p}_r$ be the distinct minimal prime ideals of R. Then, again using the notation of 19.1.14, it follows from 19.1.15 that

$$c(R) = \min\left\{\dim\left(R\Big/\left(\left(\bigcap_{i\in A}\mathfrak{p}_i\right) + \left(\bigcap_{j\in B}\mathfrak{p}_j\right)\right)\right) : (A, B) \in \mathscr{S}(r)\right\}.$$

Also, 19.2.2 shows that $\operatorname{sdim} R = \min\{\dim R/\mathfrak{p}_i : i = 1, \ldots, r\} \geq c(R)$, with equality if and only if $r = 1$.

Our applications of local cohomology to connectedness dimensions will involve use of the concept of arithmetic rank of an ideal, introduced in 3.3.2. The reader should be aware of the elementary properties of arithmetic rank described in the following exercise.

19.2.6 ♯Exercise. (i) Show that, if $\mathfrak{a}$ is proper, then $\operatorname{ht}\mathfrak{a} \leq \operatorname{ara}(\mathfrak{a})$.

(ii) Let R' be a second commutative Noetherian ring and let $f : R \to R'$ be a ring homomorphism. Prove that $\operatorname{ara}(\mathfrak{a}R') \leq \operatorname{ara}(\mathfrak{a})$.

The next result will play a crucial rôle in our approach to connectivity. Its proof uses most of the main ingredients from local cohomology theory that we shall need in this chapter. The result relates, in certain circumstances, the

arithmetic rank $\operatorname{ara}(\mathfrak{a}\cap\mathfrak{b})$ of the intersection of two ideals $\mathfrak{a}$ and $\mathfrak{b}$ in a complete local domain R with the dimensions of R and $R/(\mathfrak{a}+\mathfrak{b})$.

19.2.7 Proposition. *Assume that $(R,\mathfrak{m})$ is a complete local domain. Let $\mathfrak{b}$ be a second ideal of R, and assume that $\mathfrak{a}$ and $\mathfrak{b}$ are both proper and that* $\min\{\dim R/\mathfrak{a}, \dim R/\mathfrak{b}\} > \dim R/(\mathfrak{a}+\mathfrak{b})$. *Then*

$$\operatorname{ara}(\mathfrak{a}\cap\mathfrak{b}) \geq \dim R - \dim R/(\mathfrak{a}+\mathfrak{b}) - 1.$$

Proof. Set $d := \dim R$ and $\delta := \dim R/(\mathfrak{a}+\mathfrak{b})$. We proceed by induction on δ. First, let $\delta = 0$. Then, we have to show that $\operatorname{ara}(\mathfrak{a}\cap\mathfrak{b}) \geq d-1$. By the Mayer-Vietoris Sequence 3.2.3, there is an exact sequence

$$H^{d-1}_{\mathfrak{a}\cap\mathfrak{b}}(R) \longrightarrow H^d_{\mathfrak{a}+\mathfrak{b}}(R) \longrightarrow H^d_{\mathfrak{a}}(R) \oplus H^d_{\mathfrak{b}}(R).$$

By the local Lichtenbaum-Hartshorne Vanishing Theorem 8.2.1, we have $H^d_{\mathfrak{a}}(R) = H^d_{\mathfrak{b}}(R) = 0$. As $\delta = 0$, the ideal $\mathfrak{a}+\mathfrak{b}$ is $\mathfrak{m}$-primary, and so $H^d_{\mathfrak{a}+\mathfrak{b}}(R) \neq 0$ by 1.2.3 and 6.1.4. Altogether we obtain that $H^{d-1}_{\mathfrak{a}\cap\mathfrak{b}}(R) \neq 0$, and so it follows from 3.3.3 that $\operatorname{ara}(\mathfrak{a}\cap\mathfrak{b}) \geq d-1$. This proves the claim when $\delta = 0$.

So, let $\delta > 0$ and put $r = \operatorname{ara}(\mathfrak{a}\cap\mathfrak{b})$. Let $c_1,\ldots,c_r \in \mathfrak{a}\cap\mathfrak{b}$ be such that $\sqrt{(Rc_1+\cdots+Rc_r)} = \sqrt{(\mathfrak{a}\cap\mathfrak{b})}$. As $\mathfrak{a}+\mathfrak{b}$ is not $\mathfrak{m}$-primary we can find an element $y \in \mathfrak{m}$ which lies outside all the minimal prime ideals of $\mathfrak{a}$, $\mathfrak{b}$ and $\mathfrak{a}+\mathfrak{b}$. We write $\mathfrak{a}' = \mathfrak{a}+Ry$ and $\mathfrak{b}' = \mathfrak{b}+Ry$ and note that $\dim R/(\mathfrak{a}'+\mathfrak{b}') = \delta - 1$,

$$\dim R/\mathfrak{a}' = \dim R/\mathfrak{a} - 1 > \delta - 1 \quad\text{and}\quad \dim R/\mathfrak{b}' = \dim R/\mathfrak{b} - 1 > \delta - 1.$$

As $\sqrt{(Rc_1+\cdots+Rc_r+Ry)} = \sqrt{(\mathfrak{a}'\cap\mathfrak{b}')}$, we have $\operatorname{ara}(\mathfrak{a}'\cap\mathfrak{b}') \leq r+1$. Therefore, by the inductive hypothesis, we obtain $r+1 \geq d-(\delta-1)-1$; hence $r \geq d-\delta-1$. This completes the proof. □

As an application of this we can now prove the following.

19.2.8 Lemma. *Assume that $(R,\mathfrak{m})$ is a complete local ring. Let $\mathfrak{b}$ be a second ideal of R, and assume that $\mathfrak{a}$ and $\mathfrak{b}$ are both proper and that* $\min\{\dim R/\mathfrak{a}, \dim R/\mathfrak{b}\} > \dim R/(\mathfrak{a}+\mathfrak{b})$. *Then*

$$\dim R/(\mathfrak{a}+\mathfrak{b}) \geq \min\{c(R), \operatorname{sdim} R - 1\} - \operatorname{ara}(\mathfrak{a}\cap\mathfrak{b}).$$

Proof. Set $\delta := \dim R/(\mathfrak{a}+\mathfrak{b})$. Let $\mathfrak{p}_1,\ldots,\mathfrak{p}_n$ be the distinct minimal prime ideals of R.

First, we treat the case where, for all $i \in \{1,\ldots,n\}$, either

$$\dim R/(\mathfrak{a}+\mathfrak{p}_i) \leq \delta \qquad\text{or}\qquad \dim R/(\mathfrak{b}+\mathfrak{p}_i) \leq \delta.$$

After an appropriate reordering of the $\mathfrak{p}_i$, there will be an $s \in \mathbb{N}_0$ such that $s \leq n$ and $\dim R/(\mathfrak{a} + \mathfrak{p}_i) \leq \delta$ for $1 \leq i \leq s$ and $\dim R/(\mathfrak{b} + \mathfrak{p}_j) \leq \delta$ for $s+1 \leq j \leq n$. As $\max\{\dim R/(\mathfrak{a} + \mathfrak{p}_k) : 1 \leq k \leq n\} = \dim R/\mathfrak{a} > \delta$, we see that $s < n$. As $\max\{\dim R/(\mathfrak{b} + \mathfrak{p}_k) : 1 \leq k \leq n\} = \dim R/\mathfrak{b} > \delta$, we see that $1 \leq s$.

Now, let $\mathfrak{p}$ be a minimal prime ideal of the ideal

$$\mathfrak{c} := (\mathfrak{p}_1 \cap \ldots \cap \mathfrak{p}_s) + (\mathfrak{p}_{s+1} \cap \ldots \cap \mathfrak{p}_n)$$

such that $\dim R/\mathfrak{p} = \dim R/\mathfrak{c}$. By 19.2.5, we have $\dim R/\mathfrak{p} \geq c(R)$. Moreover we can choose indices i and j with $1 \leq i \leq s < j \leq n$ and such that $\mathfrak{p}_i, \mathfrak{p}_j \subseteq \mathfrak{p}$. It follows that

$$\delta \geq \dim R/(\mathfrak{a} + \mathfrak{p}_i) \geq \dim R/(\mathfrak{a} + \mathfrak{p})$$

and $\delta \geq \dim R/(\mathfrak{b} + \mathfrak{p}_j) \geq \dim R/(\mathfrak{b} + \mathfrak{p})$; hence

$$\delta \geq \dim R/((\mathfrak{a} + \mathfrak{p}) \cap (\mathfrak{b} + \mathfrak{p})) = \dim R/((\mathfrak{a} \cap \mathfrak{b}) + \mathfrak{p}).$$

As $R/\mathfrak{p}$ is catenary (see [35, Theorem 29.4(ii)]), we can write

$$\dim R/((\mathfrak{a} \cap \mathfrak{b}) + \mathfrak{p}) = \dim R/\mathfrak{p} - \operatorname{ht}((\mathfrak{a} \cap \mathfrak{b}) + \mathfrak{p})/\mathfrak{p}.$$

As $\dim R/\mathfrak{p} \geq c(R)$ and

$$\operatorname{ht}((\mathfrak{a} \cap \mathfrak{b}) + \mathfrak{p})/\mathfrak{p} \leq \operatorname{ara}(((\mathfrak{a} \cap \mathfrak{b}) + \mathfrak{p})/\mathfrak{p}) \leq \operatorname{ara}(\mathfrak{a} \cap \mathfrak{b}),$$

by 19.2.6, we thus obtain that $\delta \geq c(R) - \operatorname{ara}(\mathfrak{a} \cap \mathfrak{b})$.

Therefore, it remains for us to treat the case in which there exists $i \in \{1, \ldots, n\}$ such that

$$\dim R/(\mathfrak{a} + \mathfrak{p}_i) > \delta \qquad \text{and} \qquad \dim R/(\mathfrak{b} + \mathfrak{p}_i) > \delta.$$

As $\dim R/(\mathfrak{a} + \mathfrak{b} + \mathfrak{p}_i) =: \delta' \leq \delta$, it follows from 19.2.7 that

$$\delta \geq \delta' \geq \dim R/\mathfrak{p}_i - \operatorname{ara}\left(((\mathfrak{a} + \mathfrak{p}_i) \cap (\mathfrak{b} + \mathfrak{p}_i))/\mathfrak{p}_i\right) - 1.$$

Observing that $\dim R/\mathfrak{p}_i \geq \operatorname{sdim} R$ and (by 19.2.6(ii))

$$\operatorname{ara}\left(((\mathfrak{a} + \mathfrak{p}_i) \cap (\mathfrak{b} + \mathfrak{p}_i))/\mathfrak{p}_i\right) = \operatorname{ara}\left(((\mathfrak{a} \cap \mathfrak{b}) + \mathfrak{p}_i)/\mathfrak{p}_i\right) \leq \operatorname{ara}(\mathfrak{a} \cap \mathfrak{b}),$$

we thus deduce that $\delta \geq \operatorname{sdim} R - 1 - \operatorname{ara}(\mathfrak{a} \cap \mathfrak{b})$. □

We are now in a position to prove the first main result of this chapter, namely the Connectedness Bound for Complete Local Rings.

19.2.9 Connectedness Bound for Complete Local Rings. *Assume that* $(R, \mathfrak{m})$ *is a complete local ring, and let* $\mathfrak{a}$ *be proper. Then*

$$c(R/\mathfrak{a}) \geq \min\{c(R), \operatorname{sdim} R - 1\} - \operatorname{ara}(\mathfrak{a}).$$

Proof. Without loss of generality we can, and do, assume that $\mathfrak{a} = \sqrt{\mathfrak{a}}$. Let $\mathfrak{p}_1, \ldots, \mathfrak{p}_n$ be the distinct minimal prime ideals of $\mathfrak{a}$, and set $c := c(R/\mathfrak{a})$.

If $n = 1$, we have $\mathfrak{a} = \mathfrak{p}_1$ and $c = \dim R/\mathfrak{p}_1$ by 19.2.5. Choose a minimal prime ideal $\mathfrak{p}$ of R with $\mathfrak{p} \subseteq \mathfrak{p}_1$, and observe that $\operatorname{ht} \mathfrak{p}_1/\mathfrak{p} \leq \operatorname{ara}(\mathfrak{a})$, by 19.2.6(i). Since R is catenary, we deduce that

$$c = \dim R/\mathfrak{p} - \operatorname{ht} \mathfrak{p}_1/\mathfrak{p} \geq \operatorname{sdim} R - \operatorname{ara}(\mathfrak{a}),$$

from which our claim follows.

Consider now the case where $n > 1$. By 19.2.5, there exist two non-empty subsets A, B of $\{1, \ldots, n\}$ for which $A \cup B = \{1, \ldots, n\}$ and

$$c = \dim \left(R \Big/ \left(\left(\bigcap_{i \in A} \mathfrak{p}_i \right) + \left(\bigcap_{j \in B} \mathfrak{p}_j \right) \right) \right);$$

moreover, we can, and do, assume that A and B are disjoint. Set $\mathfrak{r} := \bigcap_{i \in A} \mathfrak{p}_i$ and $\mathfrak{s} := \bigcap_{j \in B} \mathfrak{p}_j$; then $\dim R/\mathfrak{r} > c$ and $\dim R/\mathfrak{s} > c$ (by the final comment of 19.2.5), and $\mathfrak{r} \cap \mathfrak{s} = \mathfrak{a}$. We can now use 19.2.8 to complete the proof. □

19.2.10 Corollary. *Let* $(R, \mathfrak{m})$ *and* $\mathfrak{a}$ *be as in* 19.2.9. *Then*

$$c(R/\mathfrak{a}) \geq c(R) - \operatorname{ara}(\mathfrak{a}) - 1.$$

If R has more than one minimal prime ideal, then the inequality is strict.

Proof. By 19.2.5, we have $c(R) \leq \operatorname{sdim} R$, with strict inequality if R has more than one minimal prime ideal. The claim therefore follows from 19.2.9. □

As another application of 19.2.9 we now prove Grothendieck's Connectedness Theorem.

19.2.11 Grothendieck's Connectedness Theorem (see [19, Exposé XIII, Théorème 2.1]). *Assume that* $(R, \mathfrak{m})$ *is a complete local ring, and let* $\mathfrak{a}$ *be proper. Let* $k \in \mathbb{N}_0$ *be such that* $c(R) \geq k$ *and* $\operatorname{sdim} R \geq k + 1$. *Then* $c(R/\mathfrak{a}) \geq k - \operatorname{ara}(\mathfrak{a})$.

Proof. By 19.2.9, we have

$$c(R/\mathfrak{a}) \geq \min\{c(R), \operatorname{sdim} R - 1\} - \operatorname{ara}(\mathfrak{a}) \geq k - \operatorname{ara}(\mathfrak{a}). \ \square$$

19.2.12 Remark. Let the situation be as in 19.2.11. In Grothendieck's original version of that result, connectivity and subdimension are considered on the punctured spectrum $\operatorname{Spec}^\circ(R)$ of R (see 19.1.13). However, since

$$c(\operatorname{Spec}^\circ(R)) = c(R) - 1 \qquad \text{and} \qquad \operatorname{sdim}(\operatorname{Spec}^\circ(R)) = \operatorname{sdim} R - 1$$

(by 19.1.13 and 19.2.4), Grothendieck's version can be recovered from ours.

19.3 Some local dimensions

Up to now, we have obtained a certain understanding of the connectivity in the spectrum of a complete local Noetherian ring. In order to apply this knowledge to the non-complete case, we prove the following lemma. The reader is warned that our proof of part (iv) of the lemma uses L. J. Ratliff's Theorem [48] (see also [35, Theorem 31.7]) that a local ring $(R, \mathfrak{m})$ is universally catenary only if, for every $\mathfrak{p} \in \operatorname{Spec}(R)$ and for every minimal prime $\mathfrak{P}$ of the ideal $\mathfrak{p}\widehat{R}$ of $\widehat{R}$, we have $\dim \widehat{R}/\mathfrak{P} = \dim R/\mathfrak{p}$.

19.3.1 Lemma. *Assume that $(R, \mathfrak{m})$ is local. The following hold:*

(i) $c(R) \geq c(\widehat{R})$;

(ii) *if $\mathfrak{p}\widehat{R} \in \operatorname{Spec}(\widehat{R})$ for all minimal prime ideals $\mathfrak{p}$ of R, then equality holds in* (i);

(iii) $\operatorname{sdim} R \geq \operatorname{sdim} \widehat{R}$; *and*

(iv) *if R is universally catenary, then equality holds in* (iii).

Proof. Let $\mathscr{P}$ be the set of minimal prime ideals of R and $\mathscr{Q}$ be the set of minimal prime ideals of $\widehat{R}$. Note that, by [35, Theorem 7.3(i)] for example, each $\mathfrak{p} \in \mathscr{P}$ is the contraction to R of some member of $\mathscr{Q}$. Also, $\mathfrak{Q} \cap R \in \mathscr{P}$ for all $\mathfrak{Q} \in \mathscr{Q}$ (by [35, Theorem 15.1(ii)], for example).

(i) By 19.2.5, we can find two non-empty subsets $\mathscr{P}_1$ and $\mathscr{P}_2$ of $\mathscr{P}$ such that $\mathscr{P}_1 \cup \mathscr{P}_2 = \mathscr{P}$ and, if $\mathfrak{a}_1 := \bigcap_{\mathfrak{p} \in \mathscr{P}_1} \mathfrak{p}$ and $\mathfrak{a}_2 := \bigcap_{\mathfrak{p} \in \mathscr{P}_2} \mathfrak{p}$, then

$$c := c(R) = \dim R/(\mathfrak{a}_1 + \mathfrak{a}_2).$$

Let $\mathscr{Q}_i := \{\mathfrak{Q} \in \mathscr{Q} : \mathfrak{Q} \cap R \in \mathscr{P}_i\}$ for $i = 1, 2$; then $\mathscr{Q}_1$ and $\mathscr{Q}_2$ are non-empty and such that $\mathscr{Q}_1 \cup \mathscr{Q}_2 = \mathscr{Q}$. Let $\mathfrak{B}_i = \bigcap_{\mathfrak{Q} \in \mathscr{Q}_i} \mathfrak{Q}$ $(i = 1, 2)$. Then, by 19.2.5, we have $c(\widehat{R}) \leq \dim \widehat{R}/(\mathfrak{B}_1 + \mathfrak{B}_2)$. Since $\mathfrak{a}_i\widehat{R} \subseteq \mathfrak{B}_i$ for $i = 1, 2$, it follows that $c(\widehat{R}) \leq \dim \widehat{R}/(\mathfrak{B}_1 + \mathfrak{B}_2) \leq \dim \widehat{R}/(\mathfrak{a}_1\widehat{R} + \mathfrak{a}_2\widehat{R}) = c$.

(ii) Suppose that $\mathfrak{p}\widehat{R} \in \operatorname{Spec}(\widehat{R})$ for all $\mathfrak{p} \in \mathscr{P}$. By 19.2.5, we can find two non-empty subsets $\mathscr{Q}_3$ and $\mathscr{Q}_4$ of $\mathscr{Q}$ such that $\mathscr{Q}_3 \cup \mathscr{Q}_4 = \mathscr{Q}$ and, if $\mathfrak{B}_i = \bigcap_{\mathfrak{Q} \in \mathscr{Q}_i} \mathfrak{Q}$ for $i = 3, 4$, then $\widehat{c} := c(\widehat{R}) = \dim \widehat{R}/(\mathfrak{B}_3 + \mathfrak{B}_4)$.

Set $\mathscr{P}_i := \{\mathfrak{Q} \cap R : \mathfrak{Q} \in \mathscr{Q}_i\}$ and $\mathfrak{a}_i = \bigcap_{\mathfrak{p} \in \mathscr{P}_i} \mathfrak{p}$ for $i = 3, 4$. Since each $\mathfrak{p} \in \mathscr{P}$ is the contraction to R of some minimal prime ideal of $\widehat{R}$, we have $\mathscr{P}_3 \cup \mathscr{P}_4 = \mathscr{P}$. In particular, we have $(\mathfrak{Q} \cap R)\widehat{R} = \mathfrak{Q}$ for all $\mathfrak{Q} \in \mathscr{Q}$, and so we can use [35, Theorem 7.4(ii)] to see that $\mathfrak{a}_i\widehat{R} = \mathfrak{B}_i$ for $i = 3, 4$. Hence, by 19.2.5,

$$\widehat{c} = \dim \widehat{R}/(\mathfrak{B}_3 + \mathfrak{B}_4) = \dim \widehat{R}/(\mathfrak{a}_3\widehat{R} + \mathfrak{a}_4\widehat{R}) = \dim R/(\mathfrak{a}_3 + \mathfrak{a}_4) \geq c(R).$$

The claim follows from this and part (i).

(iii) Let $\mathfrak{p} \in \mathscr{P}$ be such that $\dim R/\mathfrak{p} = \operatorname{sdim} R$. Now there exists $\mathfrak{Q} \in \mathscr{Q}$ such that $\mathfrak{Q} \cap R = \mathfrak{p}$. Then

$$\operatorname{sdim} \widehat{R} \leq \dim \widehat{R}/\mathfrak{Q} \leq \dim \widehat{R}/\mathfrak{p}\widehat{R} = \dim R/\mathfrak{p} = \operatorname{sdim} R.$$

(iv) Assume now that R is universally catenary. Let $\mathfrak{Q} \in \mathscr{Q}$ be such that $\operatorname{sdim} \widehat{R} = \dim \widehat{R}/\mathfrak{Q}$. Now $\mathfrak{p} := \mathfrak{Q} \cap R \in \mathscr{P}$; by Ratliff's Theorem [35, Theorem 31.7], we have $\dim \widehat{R}/\mathfrak{Q} = \dim R/\mathfrak{p}$. Hence

$$\operatorname{sdim} \widehat{R} = \dim \widehat{R}/\mathfrak{Q} = \dim R/\mathfrak{p} \geq \operatorname{sdim} R.$$

The claim follows from this and part (iii). □

19.3.2 Definitions. Let T be a Noetherian topological space, and let $p \in T$.

The *local dimension of T at p*, denoted by $\dim_p T$, is defined as the supremum of the lengths of all strictly descending chains

$$Z_0 \supset Z_1 \supset \cdots \supset Z_n$$

of closed irreducible subsets of T which all contain p if this supremum exists, and ∞ otherwise. Thus, by 19.1.3, $\dim_p T$ is a non-negative integer or ∞.

Note that, for $\mathfrak{p} \in \operatorname{Spec}(R)$, we have $\dim_{\mathfrak{p}} \operatorname{Spec}(R) = \dim R_{\mathfrak{p}}$.

Let V be an affine variety over the algebraically closed field K. Since, in an integral domain R' which is a finitely generated K-algebra, every maximal ideal has height equal to $\dim R'$ (see, for example, [60, 14.33]), it follows that $\dim_q V = \dim \mathscr{O}_{V,q} = \dim \mathscr{O}(V) = \dim V$ for all $q \in V$.

If $T_1, \ldots, T_r$ are the irreducible components of T which contain p, we write $T^p := T_1 \cup \ldots \cup T_r$, and call this subspace T^p of T the *p-component of T*.

The *local connectedness dimension of T at p*, denoted by $c_p(T)$, is defined to be the minimum of the local dimensions at p of those closed subsets Z of the p-component T^p of T which contain p and for which $T^p \setminus Z$ is disconnected. Thus

$$c_p(T) := \min\{\dim_p Z \ : Z \subseteq T^p,\ p \in Z,\ Z \text{ is closed and } T^p \setminus Z \text{ is disconnected}\}.$$

The *local subdimension* $\operatorname{sdim}_p T$ *of T at p* is defined as the minimum of the local dimensions at p of the irreducible components of T which contain p. (Of course, p does belong to at least one irreducible component of T, by 19.1.3.)

19.3.3 ♯Exercise. Let T be a Noetherian topological space and let $p \in T$.

(i) Show that $\dim_p Z = \dim_p(T^p \cap Z)$ and $\operatorname{sdim}_p Z = \operatorname{sdim}_p(T^p \cap Z)$ for each closed subset Z of T for which $p \in Z$.

(ii) Let the (distinct) irreducible components of T which contain p be $T_1, \ldots, T_r$. Show that, with the notation of 19.1.14,

$$c_p(T) = \min\left\{\dim_p\left(\left(\bigcup_{i\in A} T_i\right) \cap \left(\bigcup_{j\in B} T_j\right)\right) : (A,B) \in \mathscr{S}(r)\right\}.$$

(Use the ideas of the proof of Theorem 19.1.15.)

The next exercise provides justification for the appearance of the word 'local' in the definitions in 19.3.2.

19.3.4 ♯Exercise. Let T be a Noetherian topological space and let $p \in T$; let U be an open subset of T which contains p. Show that

(i) $U^p = T^p \cap U$;

(ii) $\dim_p T = \dim_p U$;

(iii) $\operatorname{sdim}_p T = \operatorname{sdim}_p U$; and

(iv) $c_p(T) = c_p(U)$.

(Use Exercise 19.1.2(i),(iii),(v) to establish the existence of a bijection between the set of irreducible closed subsets of T containing p and the set of irreducible closed subsets of U containing p; then use Exercise 19.3.3(ii).)

19.3.5 Exercise. Let $p \in V := V_{\mathbb{A}^3}(X_1X_2X_3)$. Calculate $c_p(V)$

(i) when $p = (0,0,0)$;

(ii) when exactly two of the co-ordinates of p are 0; and

(iii) in all other cases.

19.3.6 ♯Exercise. Let $\mathfrak{p} \in \operatorname{Spec}(R)$. Show that $c_{\mathfrak{p}}(\operatorname{Spec}(R)) = c(R_{\mathfrak{p}})$ and $\operatorname{sdim}_{\mathfrak{p}}(\operatorname{Spec}(R)) = \operatorname{sdim}(R_{\mathfrak{p}})$.

We wish to study the connectivity of varieties over an algebraically closed field. We remind the reader about some elementary facts concerning such varieties.

19.3.7 Reminders. Let K be an algebraically closed field, and let $r \in \mathbb{N}$. Let $V \subseteq \mathbb{P}^r(K)$ be a quasi-projective variety.

(i) Regard the polynomial ring $K[X_0, X_1, \ldots, X_r]$ as the coordinate ring $\mathcal{O}(\mathbb{A}^{r+1}(K))$, and let $i \in \{0, \ldots, r\}$. Let $U_i\mathbb{P}^r(K)$ denote the open subset of $\mathbb{P}^r(K)$ given by

$$\begin{aligned} U_i\mathbb{P}^r(K) &= \mathbb{P}^r(K) \setminus V_{\mathbb{P}^r(K)}(X_i) \\ &= \{(c_0 : \cdots : c_i : \cdots : c_r) \in \mathbb{P}^r(K) : c_i \neq 0\}. \end{aligned}$$

There is an isomorphism of varieties $\sigma_i : \mathbb{A}^r(K) \xrightarrow{\cong} U_i\mathbb{P}^r(K)$ given by $\sigma_i((a_1,\ldots,a_r)) = (a_1 : \cdots : a_i : 1 : a_{i-1} : \cdots : a_r)$ for all $(a_1,\ldots,a_r) \in \mathbb{A}^r(K)$. Note that $\mathbb{P}^r(K) = \bigcup_{j=0}^r U_j\mathbb{P}^r(K)$; it follows that the quasi-projective variety $V \subseteq \mathbb{P}^r(K)$ has a finite covering by open sets each of which is *quasi-affine* (in the sense that it is isomorphic to a quasi-affine variety over K). As any quasi-affine variety has a finite covering by open sets which are affine, we thus see that quasi-projective varieties also have finite coverings by affine open sets.

The above isomorphisms also show that affine varieties, and also quasi-affine varieties, are quasi-projective: the reader should remember that, for us, the word 'variety', as introduced in 14.2.1(ii), is synonymous with 'quasi-projective variety' (and does *not* mean the same as '(abstract) variety' in the sense of Hartshorne [22, p. 105]).

(ii) Let $p \in V$. By part (i), there is an open subset U of V such that $p \in U$ and U is an affine variety. We can, and do, identify the local ring $\mathcal{O}_{V,p}$ of p on V with $\mathcal{O}_{U,p} = \mathcal{O}(U)_{I_U(p)}$ (see 6.4.1). Let C be a closed subset of V such that $p \in C$. The vanishing ideal $I_U(C \cap U)$ was defined in 14.1.2. Recall that the *local vanishing ideal* $I_{V,p}(C)$ *of* C *at* p is the (radical) ideal of $\mathcal{O}_{V,p}$ consisting of all germs of regular functions $f \in \mathcal{O}(W)$ defined on some open neighbourhood W of p in V and such that $f(W \cap C) = 0$; hence

$$I_{V,p}(C) = I_{U,p}(C \cap U) = I_U(C \cap U)\mathcal{O}(U)_{I_U(p)} = I_U(C \cap U)\mathcal{O}_{U,p}.$$

19.3.8 ♯Exercise. Let K be an algebraically closed field.

(i) Let V be an affine variety over K. Let $\mathfrak{b}$ be a proper ideal of $\mathcal{O}(V)$, and let $V(\mathfrak{b})$ denote the closed subset of V determined by $\mathfrak{b}$; let $p \in V(\mathfrak{b})$. Show that $c_p(V(\mathfrak{b})) = c(\mathcal{O}_{V,p}/\mathfrak{b}\mathcal{O}_{V,p})$ and

$$\begin{aligned}\operatorname{sdim}_p V(\mathfrak{b}) &= \operatorname{sdim}(\mathcal{O}_{V,p}/\mathfrak{b}\mathcal{O}_{V,p}) \\ &= \min\{\dim \mathcal{O}(V)/\mathfrak{q} : \mathfrak{q} \text{ is a minimal prime of } \mathfrak{b} \\ &\qquad\qquad \text{such that } p \in V(\mathfrak{q})\}.\end{aligned}$$

(ii) Let V' be a variety over K. Let W be a non-empty closed subset of V', and let $p \in W$. Show that, with the notation of 19.3.7(ii), $\operatorname{sdim}_p W = \operatorname{sdim}(\mathcal{O}_{V',p}/I_{V',p}(W))$ and $c_p(W) = c(\mathcal{O}_{V',p}/I_{V',p}(W))$. (Use part (i) and 19.3.4.)

19.3.9 Definition. Let V be a variety over the algebraically closed field K. Let W be a non-empty closed subset of V, and let $p \in W$. We define the *formal connectedness dimension of* W *at* p, denoted $\widehat{c}_p(W)$, by

$$\widehat{c}_p(W) = c\left(\widehat{\mathcal{O}_{V,p}}/I_{V,p}(W)\widehat{\mathcal{O}_{V,p}}\right) = c\left((\mathcal{O}_{V,p}/I_{V,p}(W))\widehat{\ }\right).$$

Here again, $I_{V,p}(W)$ is the local vanishing ideal of W at p: see 19.3.7(ii).

19.3.10 Remark. Let V, W and p be as in 19.3.9. Then it follows from 19.3.1(i) and 19.3.8 that $c_p(W) \geq \widehat{c}_p(W)$. Moreover, if V is affine and $\mathfrak{b}$ is any ideal of $\mathcal{O}(V)$ for which $W = V(\mathfrak{b})$, then $\widehat{c}_p(W) = c\left((\mathcal{O}_{V,p}/\mathfrak{b}\mathcal{O}_{V,p})\widehat{\ }\right)$.

19.3.11 Exercise. (i) Calculate $c_{(0,0)}(V_i)$ and $\widehat{c}_{(0,0)}(V_i)$ for $i = 1, 2$, where $V_1 := V_{\mathbb{A}^2}(X^3 - Y^2)$ and $V_2 := V_{\mathbb{A}^2}(X^2 + X^3 - Y^2)$.

(ii)Let V be the affine variety in $\mathbb{A}^4$ of Hartshorne's Example 2.3.7 given by

$$V := V_{\mathbb{A}^4}(X_1X_4 - X_2X_3,\ X_1^2X_3 + X_1X_2 - X_2^2,\ X_3^3 + X_3X_4 - X_4^2).$$

Show, perhaps with the aid of 8.2.13(iv) and 19.1.11, that $\widehat{c}_{(0,0,0,0)}(V) = 0$.

19.3.12 Definition. Let V be a variety over the algebraically closed field K. Let W and Z be closed subsets of V with $Z \subseteq W$, and let $p \in Z$. Note that $I_{V,p}(W) \subseteq I_{V,p}(Z)$.

We define the *(local) arithmetic rank of Z at p with respect to W*, denoted $\operatorname{ara}_{W,p}(Z)$, by

$$\operatorname{ara}_{W,p}(Z) = \operatorname{ara}\left(I_{V,p}(Z)/I_{V,p}(W)\right).$$

(Here, $I_{V,p}(Z)/I_{V,p}(W)$ is considered as an ideal of $\mathcal{O}_{V,p}/I_{V,p}(W)$.)

19.3.13 Definition. Let V be a variety over the algebraically closed field K. Let W be a non-empty closed subset of V, and let $p \in W$. We extend the terminology of 8.2.15 and say that W is *analytically reducible at p* precisely when $\widehat{\mathcal{O}_{V,p}}/I_{V,p}(W)\widehat{\mathcal{O}_{V,p}}$ has more than one minimal prime ideal. Otherwise, W is said to be *analytically irreducible at p*. Note that $\widehat{\mathcal{O}_{V,p}}/I_{V,p}(W)\widehat{\mathcal{O}_{V,p}} \cong (\mathcal{O}_{V,p}/I_{V,p}(W))\widehat{\ }$, and by [35, Theorem 32.2(i) and p. 259, Remark 1], W is analytically irreducible at p if and only if $(\mathcal{O}_{V,p}/I_{V,p}(W))\widehat{\ }$ is a domain.

19.3.14 Remark. Note that, in the situation of 19.3.9, 19.3.12 and 19.3.13, the invariants $\widehat{c}_p(W)$ and $\operatorname{ara}_{W,p}(Z)$, and the notion (for W) of analytical reducibility at p, do not depend on the ambient variety V, and, indeed, remain unchanged if V, W and Z are replaced, respectively, by U, $W \cap U$ and $Z \cap U$, where U is any open subset of V containing p.

We can now deduce the following from 19.2.9 and 19.2.10.

19.3.15 Proposition. *Let V be a variety over the algebraically closed field K. Let W and Z be closed subsets of V with $Z \subseteq W$, and let $p \in Z$. Then*

(i) $\widehat{c}_p(Z) \geq \min\{\widehat{c}_p(W), \operatorname{sdim}_p W - 1\} - \operatorname{ara}_{W,p}(Z)$;

(ii) $\widehat{c}_p(Z) \geq \widehat{c}_p(W) - \operatorname{ara}_{W,p}(Z) - 1$; *and*

(iii) *if W is analytically reducible at p, then the inequality in part* (ii) *is strict.*

Proof. Let $R := \mathcal{O}_{V,p}/I_{V,p}(W)$ and $\mathfrak{a} := I_{V,p}(Z)/I_{V,p}(W)$. Then

$$\widehat{c}_p(W) = c(\widehat{R}) \quad \text{and} \quad \widehat{c}_p(Z) = c\left(\widehat{\mathcal{O}_{V,p}}\Big/ I_{V,p}(Z)\widehat{\mathcal{O}_{V,p}}\right) = c(\widehat{R}/\mathfrak{a}\widehat{R}).$$

Next, $\operatorname{ara}_{W,p}(Z) = \operatorname{ara}(\mathfrak{a})$ (see 19.3.12), and so $\operatorname{ara}_{W,p}(Z) \geq \operatorname{ara}(\mathfrak{a}\widehat{R})$, by 19.2.6(ii). Also, $\operatorname{sdim}_p W = \operatorname{sdim} R = \operatorname{sdim} \widehat{R}$, by 19.3.8 and 19.3.1(iv).

We can now apply the Connectedness Bound for Complete Local Rings 19.2.9 to prove part (i), and 19.2.10 to prove parts (ii) and (iii). □

19.3.16 Exercise. Let V be the affine variety in $\mathbb{A}^4$ of Hartshorne's Example 2.3.7 given by

$$V := V_{\mathbb{A}^4}(X_1X_4 - X_2X_3,\ X_1^2X_3 + X_1X_2 - X_2^2,\ X_3^3 + X_3X_4 - X_4^2).$$

Use 19.3.11 and 19.3.15 to show that $\operatorname{ara}_{\mathbb{A}^4,(0,0,0,0)}(V) \geq 3$.

It seems natural to ask whether, if the formal connectedness dimensions in the inequality of 19.3.15(ii) are replaced by the corresponding local connectedness dimensions, the resulting statement is still true. We shall now provide an example which shows that this is not always the case.

19.3.17 Example. Let R be the subring of $R' := \mathbb{C}[X_1, X_2, X_3] = \mathcal{O}(\mathbb{A}^3)$ given by $R := \mathbb{C}[X_1, X_2, X_1X_3, X_2X_3, X_3^2 - 1, X_3(X_3^2 - 1)]$.

Let $Y_1, \ldots, Y_6$ be independent indeterminates over $\mathbb{C}$, and let

$$f : \mathcal{O}(\mathbb{A}^6) = \mathbb{C}[Y_1, Y_2, Y_3, Y_4, Y_5, Y_6] \longrightarrow R$$

be the $\mathbb{C}$-algebra homomorphism for which $f(Y_1) = X_1$, $f(Y_2) = X_2$, $f(Y_3) = X_1X_3$, $f(Y_4) = X_2X_3$, $f(Y_5) = X_3^2 - 1$ and $f(Y_6) = X_3(X_3^2 - 1)$. Then $\mathfrak{p} := \operatorname{Ker} f$ is a prime ideal of $\mathcal{O}(\mathbb{A}^6)$ (since R is an integral domain); let $V := V_{\mathbb{A}^6}(\mathfrak{p})$ denote the affine variety determined by $\mathfrak{p}$, so that there is a natural isomorphism of $\mathbb{C}$-algebras $\mathcal{O}(V) \cong R$.

The inclusion mapping $R \to R' = \mathcal{O}(\mathbb{A}^3)$, which makes R' integral over its subring R, therefore gives rise to a finite morphism of varieties $\alpha : \mathbb{A}^3 \to V$ such that

$$\alpha((c_1, c_2, c_3)) = (c_1, c_2, c_1c_3, c_2c_3, c_3^2 - 1, c_3(c_3^2 - 1)) \quad \text{for all } (c_1, c_2, c_3) \in \mathbb{A}^3.$$

Let $p = (0, 0, 1), q = (0, 0, -1) \in \mathbb{A}^3$, and let 0 denote $(0, 0, 0, 0, 0, 0) \in \mathbb{A}^6$. It is straightforward to check that $\alpha\lceil : \mathbb{A}^3 \setminus \{p, q\} \longrightarrow V \setminus \{0\}$ is an isomorphism of

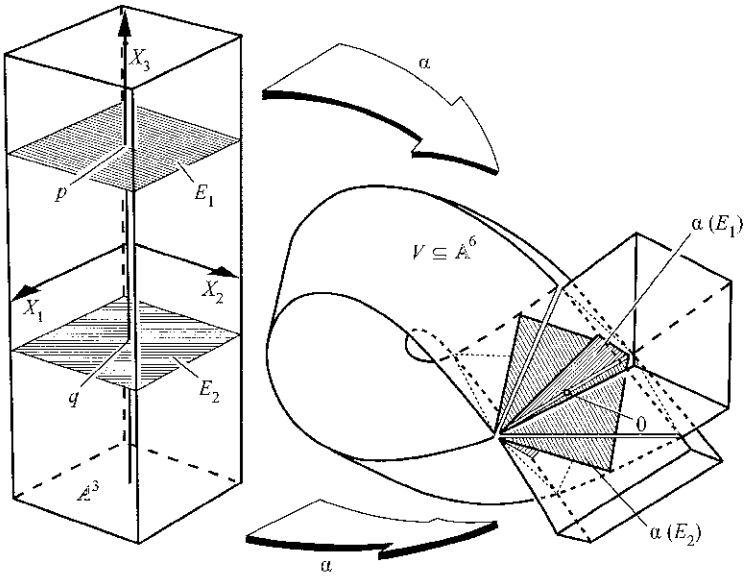

Fig. 19.1.

(quasi-affine) varieties, with inverse $\beta : V \setminus \{0\} \longrightarrow \mathbb{A}^3 \setminus \{p, q\}$ given by

$$\beta((d_1, d_2, d_3, d_4, d_5, d_6)) = \begin{cases} (d_1, d_2, d_3/d_1) & \text{if} \quad d_1 \neq 0, \\ (d_1, d_2, d_4/d_2) & \text{if} \quad d_2 \neq 0, \\ (d_1, d_2, d_6/d_5) & \text{if} \quad d_5 \neq 0 \end{cases}$$

(for all $(d_1, d_2, d_3, d_4, d_5, d_6) \in V \setminus \{0\}$).

Let $W := V \cap V_{\mathbb{A}^6}(Y_5)$, a closed subset of V such that $0 \in W$. Note that $\operatorname{ara}_{V,0}(W) = \operatorname{ara}(I_V(W)\mathcal{O}_{V,0}) = 1$.

Let $E_1 := V_{\mathbb{A}^3}(X_3 - 1)$ and $E_2 := V_{\mathbb{A}^3}(X_3 + 1)$. Since α is finite, it is a closed map, and so $\alpha(E_1)$ and $\alpha(E_2)$ are closed subsets of W with $\dim(\alpha(E_i)) = \dim E_i = 2$ for $i = 1, 2$.

Since $\alpha^{-1}(W) = V_{\mathbb{A}^3}(X_3^2 - 1) = E_1 \cup E_2$, it follows that W can be expressed as $W = \alpha(E_1) \cup \alpha(E_2)$, where $\alpha(E_1)$ and $\alpha(E_2)$ are closed irreducible subsets of dimension 2. Therefore $\alpha(E_1)$ and $\alpha(E_2)$ must be the irreducible components of W. Hence, by 19.3.3(ii), we have $c_0(W) = \dim_0(\alpha(E_1) \cap \alpha(E_2)) = \dim_0\{0\} = 0$. On the other hand, since V is irreducible, $c_0(V) = \dim_0 V = 3$. We therefore have the strict inequality

$$c_0(W) = 0 < 1 = 3 - 1 - 1 = c_0(V) - \operatorname{ara}_{V,0}(W) - 1.$$

Thus, if the formal connectedness dimensions in the inequality of 19.3.15(ii) are replaced by the corresponding local connectedness dimensions, the resulting statement is not always true. The situation of this example is roughly illustrated in the diagram in Figure 19.1.

19.4 Connectivity of affine algebraic cones

Connectedness dimensions of affine algebraic cones behave particularly satisfactorily, and the next two lemmas provide the key to this good behaviour. We shall use the notation of 14.1.2 for affine algebraic cones.

19.4.1 Lemma. *Let K be an algebraically closed field, and let $r \in \mathbb{N}$, and let $C \subseteq \mathbb{A}^r(K)$ be an affine algebraic cone. Then C is irreducible (that is, C is a variety), if and only if C is analytically irreducible at* 0.

Proof. ($\Rightarrow$) Assume that C is irreducible. Then, by 14.1.2, the ring $\mathcal{O}(C)$ is a positively graded *local homogeneous domain with $\mathcal{O}(C)_0 = K$; furthermore, $\mathcal{O}(C)_+$ is the unique *maximal graded ideal of $\mathcal{O}(C)$, and is actually maximal and equal to $I_C(0)$. Hence $\mathcal{O}_{C,0} \cong \mathcal{O}(C)_{\mathcal{O}(C)_+}$. Therefore, by 13.1.15, the completion $\widehat{\mathcal{O}_{C,0}}$ is a domain, and so C is analytically irreducible at 0.

($\Leftarrow$) Assume that C is reducible, so that C has more than one irreducible component. By 19.1.4(i), these irreducible components all contain 0. This means that the local vanishing ideal $I_{\mathbb{A}^r(K),0}(C)$ of C at 0 has more than one minimal prime. Hence $\mathcal{O}_{C,0}$ is not a domain, and neither is its completion. □

19.4.2 Lemma. *Let V be an affine variety over the algebraically closed field K, let $W \subseteq V$ be a closed subset, let $p \in W$, and assume that all the irreducible components of W which contain p are analytically irreducible at p. Then $\widehat{c}_p(W) = c_p(W)$.*

Proof. Let $\mathfrak{b} := I_V(W)$, and let $R := \mathcal{O}_{V,p}/\mathfrak{b}\mathcal{O}_{V,p}$. By 19.3.8(ii) and 19.3.10, it is enough for us to show that $c(R) = c(\widehat{R})$; therefore, by 19.3.1(ii), it is enough for us to show that, for each minimal prime ideal $\mathfrak{p}$ of R, we have $\mathfrak{p}\widehat{R} \in \operatorname{Spec}(\widehat{R})$, and this is what we shall do. Now $\mathfrak{p} = \mathfrak{q}\mathcal{O}_{V,p}/\mathfrak{b}\mathcal{O}_{V,p}$ for some minimal prime ideal $\mathfrak{q}$ of $\mathfrak{b}$ such that $\mathfrak{q} \subseteq I_V(p)$. But then $Z := V(\mathfrak{q})$, the closed subset of V determined by $\mathfrak{q}$, is an irreducible component of W which contains p. By hypothesis, Z is analytically irreducible at p, and so, by 19.3.13, the ring $(\mathcal{O}_{V,p}/I_{V,p}(Z))^\frown = (\mathcal{O}_{V,p}/\mathfrak{q}\mathcal{O}_{V,p})^\frown$ is a domain. Hence $(R/\mathfrak{p})^\frown$ is a domain, so that $\mathfrak{p}\widehat{R} \in \operatorname{Spec}(\widehat{R})$. □

The next lemma establishes a very useful fact about the connectedness dimensions of an affine algebraic cone C: the formal connectedness dimension of C at the origin and the local connectedness dimension of C at the origin are equal, and they are both equal to the connectedness dimension $c(C)$.

19.4.3 Lemma. *Let K be an algebraically closed field, let $r \in \mathbb{N}$, and let $C \subseteq \mathbb{A}^r(K)$ be an affine algebraic cone. As in* 14.1.2, *we use* 0 *to denote the origin of $\mathbb{A}^r(K)$. Then*

(i) $\dim C = \dim_0 C$,

(ii) $\operatorname{sdim} C = \operatorname{sdim}_0 C$, *and*

(iii) $c(C) = c_0(C) = \widehat{c}_0(C)$.

Proof. By 19.1.4(i), all the irreducible components of C are themselves affine algebraic cones in $\mathbb{A}^r(K)$, and so contain 0. Now the dimension of an irreducible affine algebraic cone C' satisfies $\dim C' = \dim_0 C'$ (by 19.3.2). The claims in parts (i) and (ii) now follow immediately, while the equality $c(C) = c_0(C)$ follows from these considerations, 19.1.15 and 19.3.3(ii). Finally, Lemma 19.4.1 shows that all the irreducible components of C are analytically irreducible at 0, and so Lemma 19.4.2 shows that $c_0(C) = \widehat{c}_0(C)$. □

We can now deduce the following corollary from 19.3.15.

19.4.4 Corollary. *Let K be an algebraically closed field, let $r \in \mathbb{N}$, let $D, E \subseteq \mathbb{A}^r(K)$ be affine algebraic cones such that $E \subseteq D$. Then*

(i) $c(E) \geq \min\{c(D), \operatorname{sdim} D - 1\} - \operatorname{ara}_{D,0}(E)$;

(ii) $c(E) \geq c(D) - \operatorname{ara}_{D,0}(E) - 1$; *and*

(iii) *if D is reducible, then the inequality in part* (ii) *is strict.*

Proof. In view of Lemma 19.4.3, statements (i) and (ii) follow immediately from the corresponding statements of 19.3.15 (used with $V = \mathbb{A}^r(K)$, $W = D$ and $Z = E$). Statement (iii) follows from 19.3.15(iii) and Lemma 19.4.1. □

19.5 Connectivity of projective varieties

In view of the close relationship between affine algebraic cones and projective algebraic sets (see 14.2.1(iii)), we can exploit 19.4.4 to study the connectivity of closed sets in projective varieties. We intend to do this, but first we need a few preliminaries.

19.5.1 Lemma. *Let K be an algebraically closed field, let $r \in \mathbb{N}$, let $W \subseteq \mathbb{P}^r(K)$ be a non-empty closed subset of $\mathbb{P}^r(K)$, and consider the affine cone* $\mathrm{Cone}(W) \subseteq \mathbb{A}^{r+1}(K)$ *over W, as in* 14.2.1(iii). *Then*

(i) $\dim W = \dim(\mathrm{Cone}(W)) - 1 = \dim_0(\mathrm{Cone}(W)) - 1$;
(ii) $\mathrm{sdim}\, W = \mathrm{sdim}(\mathrm{Cone}(W)) - 1 = \mathrm{sdim}_0(\mathrm{Cone}(W)) - 1$; *and*
(iii) $c(W) = c(\mathrm{Cone}(W)) - 1 = c_0(\mathrm{Cone}(W)) - 1 = \widehat{c}_0(\mathrm{Cone}(W)) - 1$.

Proof. Let the distinct irreducible components of W be $W_1, \ldots, W_n$. By 19.1.4(ii), $\mathrm{Cone}(W_1), \ldots, \mathrm{Cone}(W_n)$ are the (distinct) irreducible components of $\mathrm{Cone}(W)$. Furthermore, it follows from 14.2.1(vii) that

$$\dim W_i = \dim(\mathrm{Cone}(W_i)) - 1 \qquad \text{for } i = 1, \ldots, n.$$

In view of 19.4.3, the claims in statements (i) and (ii) are now immediate.

(iii) With the notation of 19.1.14, let $(A, B) \in \mathscr{S}(r)$. By 14.2.1(v), we have

$$\mathrm{Cone}\left(\left(\bigcup_{i \in A} W_i\right) \cap \left(\bigcup_{j \in B} W_j\right)\right) = \left(\bigcup_{i \in A} \mathrm{Cone}(W_i)\right) \cap \left(\bigcup_{j \in B} \mathrm{Cone}(W_j)\right).$$

Since $\mathrm{Cone}(W_i)$ $(i = 1, \ldots, n)$ are the irreducible components of $\mathrm{Cone}(W)$, it now follows from part (i) and 19.1.15 that $c(W) = c(\mathrm{Cone}(W)) - 1$. Finally, we can use 19.4.3 to complete the proof. □

19.5.2 Definition. Let K be an algebraically closed field and let $r \in \mathbb{N}$. Let W and Z be non-empty closed subsets of $\mathbb{P}^r(K)$ with $Z \subseteq W$. Note that $I_{\mathbb{A}^{r+1}(K)}(\mathrm{Cone}(W)) \subseteq I_{\mathbb{A}^{r-1}(K)}(\mathrm{Cone}(Z))$, and that

$$I_{\mathbb{A}^{r+1}(K)}(\mathrm{Cone}(Z)) / I_{\mathbb{A}^{r+1}(K)}(\mathrm{Cone}(W))$$

is an ideal of $\mathscr{O}(\mathbb{A}^{r+1}(K)) / I_{\mathbb{A}^{r+1}(K)}(\mathrm{Cone}(W))$.

We define the *arithmetic rank of Z with respect to W*, denoted $\mathrm{ara}_W(Z)$, by

$$\mathrm{ara}_W(Z) = \mathrm{ara}\left(I_{\mathbb{A}^{r+1}(K)}(\mathrm{Cone}(Z)) / I_{\mathbb{A}^{r+1}(K)}(\mathrm{Cone}(W))\right).$$

It should be noted that, by 19.2.6(ii) and 19.3.7(ii), we have

$$\mathrm{ara}_W(Z) \geq \mathrm{ara}_{\mathrm{Cone}(W),0}(\mathrm{Cone}(Z)).$$

We are now able to state and prove a form of the Bertini-Grothendieck Connectivity Theorem.

19.5.3 The Bertini-Grothendieck Connectivity Theorem (see [19, Exposé XIII, Corollaire 2.3]). *Let K be an algebraically closed field and let $r \in \mathbb{N}$. Let W and Z be non-empty closed subsets of $\mathbb{P}^r(K)$ with $Z \subseteq W$. Then*

(i) $c(Z) \geq \min\{c(W), \operatorname{sdim} W - 1\} - \operatorname{ara}_W(Z)$;
(ii) $c(Z) \geq c(W) - \operatorname{ara}_W(Z) - 1$; *and*
(iii) *if W is reducible, then the inequality in part* (ii) *is strict.*

Proof. By Lemma 19.5.1, we have $\operatorname{sdim} W = \operatorname{sdim}(\operatorname{Cone}(W)) - 1$,

$$c(W) = c(\operatorname{Cone}(W)) - 1 \qquad \text{and} \qquad c(Z) = c(\operatorname{Cone}(Z)) - 1.$$

Moreover, $\operatorname{ara}_W(Z) \geq \operatorname{ara}_{\operatorname{Cone}(W),0}(\operatorname{Cone}(Z))$ by 19.5.2, while 14.2.1(v) shows that $\operatorname{Cone}(W)$ is reducible if W is reducible. Therefore, all three statements follow from the corresponding statements of Corollary 19.4.4. □

Let K be an algebraically closed field and let $r \in \mathbb{N}$. Recall that a *hypersurface* in $\mathbb{P}^r(K)$ is a closed set $V_{\mathbb{P}^r(K)}(f)$ defined by a single homogeneous polynomial $f \in K[X_0, X_1, \ldots, X_r]$ of positive degree. We can now deduce the following corollary from the Bertini-Grothendieck Connectivity Theorem 19.5.3.

19.5.4 Corollary. *Let K be an algebraically closed field, let $r \in \mathbb{N}$, let W be a non-empty closed subset of $\mathbb{P}^r(K)$, and let $H_1, \ldots, H_t \subseteq \mathbb{P}^r(K)$ be hypersurfaces. Then*

(i) $c(W \cap H_1 \cap \ldots \cap H_t) \geq \min\{c(W), \operatorname{sdim} W - 1\} - t$;
(ii) $c(W \cap H_1 \cap \ldots \cap H_t) \geq c(W) - t - 1$; *and*
(iii) *if W is reducible, then the inequality in part* (ii) *is strict.*

Proof. For $i = 1, \ldots, t$, we can write $H_i = V_{\mathbb{P}^r(K)}(f_i)$, where $f_i \in K[X_0, X_1, \ldots, X_r]$ is a homogeneous polynomial of positive degree. Set

$$Z := W \cap H_1 \cap \ldots \cap H_t = V_{\mathbb{P}^r(K)}\left(I_{\mathbb{P}^r(K)}(W) + (f_1, \ldots, f_t)\right),$$

so that $I_{\mathbb{P}^r(K)}(Z) = \sqrt{I_{\mathbb{P}^r(K)}(W) + (f_1, \ldots, f_t)}$. This equation shows that $\operatorname{ara}_W(Z) = \operatorname{ara}\left(I_{\mathbb{P}^r(K)}(Z)/I_{\mathbb{P}^r(K)}(W)\right) \leq t$. The claims now follow from application of 19.5.3. □

19.5.5 Exercise. Let K be an algebraically closed field and let $r \in \mathbb{N}$.

(i) Prove the 'classical' form of Bertini's Connectivity Theorem, that if $V \subseteq \mathbb{P}^r(K)$ is a projective variety such that $\dim V > 1$ and $H \subseteq \mathbb{P}^r(K)$ is a hypersurface, then $V \cap H$ is connected.

(ii) Provide an example which shows that if the irreducibility of V is dropped from the statement in part (i) above, then the resulting statement is no longer always true.

(iii) Provide an example of an affine variety $V \subseteq \mathbb{A}^r(K)$ with $\dim V > 1$ such that $V \cap H$ is disconnected for a hyperplane $H \subseteq \mathbb{A}^r(K)$.

19.6 Connectivity of intersections

Our next aim is the study of the connectivity of the intersection of two affine algebraic cones. For this, we recall, in 19.6.1 and 19.6.2 below, some elementary facts about products of affine algebraic sets.

19.6.1 Reminder and Remark. Let K be an algebraically closed field and let $r, s \in \mathbb{N}$. We consider polynomial rings $K[X_1, \ldots, X_r] = \mathcal{O}(\mathbb{A}^r(K))$, $K[Y_1, \ldots, Y_s] = \mathcal{O}(\mathbb{A}^s(K))$ and $K[X_1, \ldots, X_r; Y_1, \ldots, Y_s] = \mathcal{O}(\mathbb{A}^{r+s}(K))$.

Let $\mathfrak{a}$ be an ideal of $K[X_1, \ldots, X_r]$ and $\mathfrak{b}$ be an ideal of $K[Y_1, \ldots, Y_s]$, and set $V := V_{\mathbb{A}^r(K)}(\mathfrak{a})$ and $W := V_{\mathbb{A}^s(K)}(\mathfrak{b})$. Recall that the *product of V and W* is just the Cartesian product $V \times W \subseteq \mathbb{A}^{r+s}(K)$; it is an affine algebraic set because

$$V \times W = V_{\mathbb{A}^{r+s}(K)}(\mathfrak{a}K[X_1, \ldots, X_r; Y_1, \ldots, Y_s] + \mathfrak{b}K[X_1, \ldots, X_r; Y_1, \ldots, Y_s]).$$

(i) Recall from Hartshorne [22, Chapter I, Exercise 3.15] that, when $V \subseteq \mathbb{A}^r(K)$ and $W \subseteq \mathbb{A}^s(K)$ are irreducible, then $V \times W \subseteq \mathbb{A}^{r+s}(K)$ is again irreducible and, moreover, $\dim(V \times W) = \dim V + \dim W$.

(ii) Assume now that $r = s$. Let $\Delta^{(r)}$ be the *diagonal* $\{(c, c) : c \in \mathbb{A}^r(K)\} \subseteq \mathbb{A}^{2r}(K)$. Note that $\Delta^{(r)} = V_{\mathbb{A}^{2r}(K)}(X_1 - Y_1, \ldots, X_r - Y_r)$, so that $\Delta^{(r)}$ is irreducible, and also that there is the *diagonal isomorphism* of varieties $\delta^{(r)} : \mathbb{A}^r(K) \longrightarrow \Delta^{(r)}$ for which $\delta^{(r)}(c) = (c, c)$ for all $c \in \mathbb{A}^r(K)$. If $V, W \subseteq \mathbb{A}^r(K)$ are closed subsets of $\mathbb{A}^r(K)$, then

$$\delta^{(r)}(V \cap W) = (V \times W) \cap \Delta^{(r)},$$

and $\delta^{(r)}$ gives rise to a homeomorphism $\delta^{(r)}\lceil : V \cap W \xrightarrow{\approx} (V \times W) \cap \Delta^{(r)}$.

19.6.2 ♯Exercise. Let K be an algebraically closed field, let $r, s \in \mathbb{N}$, and let $V \subseteq \mathbb{A}^r(K)$ and $W \subseteq \mathbb{A}^s(K)$ be non-empty closed sets. Consider their product $V \times W \subseteq \mathbb{A}^{r+s}(K)$, as in 19.6.1.

(i) Show that if V and W are affine algebraic cones, then $V \times W$ is again an affine algebraic cone.

(ii) Let $V_1, \ldots, V_p$ be the distinct irreducible components of V and let $W_1, \ldots, W_q$ be the distinct irreducible components of W. Show that the products $V_i \times W_j$ $(i = 1, \ldots, p,\ j = 1, \ldots, q)$ are the (distinct) irreducible components of $V \times W$.

(iii) Show that

$$\dim(V \times W) = \dim V + \dim W \qquad \text{and} \qquad \operatorname{sdim}(V \times W) = \operatorname{sdim} V + \operatorname{sdim} W.$$

19.6.3 Lemma. *Let K be an algebraically closed field, let $r, s \in \mathbb{N}$, and let $V \subseteq \mathbb{A}^r(K)$ and $W \subseteq \mathbb{A}^s(K)$ be non-empty closed sets. Then*

(i) $c(V \times W) \geq \min\{\operatorname{sdim} V + c(W), \operatorname{sdim} W + c(V)\}$;
(ii) $c(V \times W) \geq c(V) + c(W)$; *and*
(iii) *if V and W are both reducible, then the inequality in part* (ii) *is strict.*

Proof. Let $V_1, \ldots, V_p$ be the distinct irreducible components of V and let $W_1, \ldots, W_q$ be the distinct irreducible components of W. By 19.6.2(ii), the products $V_i \times W_j$ $(i = 1, \ldots, p,\ j = 1, \ldots, q)$ are the (distinct) irreducible components of $V \times W$. By 19.1.15, there are two non-empty subsets $A, B \subseteq \{1, \ldots, p\} \times \{1, \ldots, q\}$ such that $A \cup B = \{1, \ldots, p\} \times \{1, \ldots, q\}$ and

$$c(V \times W) = \dim\left(\left(\bigcup_{(i,j)\in A} V_i \times W_j\right) \cap \left(\bigcup_{(k,l)\in B} V_k \times W_l\right)\right).$$

The argument now splits into two cases. Suppose first that there exists $i_0 \in \{1, \ldots, p\}$ such that there are indices $j, l \in \{1, \ldots, q\}$ for which $(i_0, j) \in A$ and $(i_0, l) \in B$. Then $\overline{A} := \{j \in \mathbb{N} : (i_0, j) \in A\}$ and $\overline{B} := \{l \in \mathbb{N} : (i_0, l) \in B\}$ are non-empty sets such that $\overline{A} \cup \overline{B} = \{1, \ldots, q\}$. Set $Z := \left(\bigcup_{j\in\overline{A}} W_j\right) \cap \left(\bigcup_{l\in\overline{B}} W_l\right)$. By 19.1.15, $\dim Z \geq c(W)$. Let Y be an irreducible component of Z such that $\dim Y = \dim Z$. Then there exist $j \in \overline{A}$ and $l \in \overline{B}$ such that $Y \subseteq W_j$ and $Y \subseteq W_l$. Therefore $V_{i_0} \times Y \subseteq (V_{i_0} \times W_j) \cap (V_{i_0} \times W_l)$, and so

$$\begin{aligned} c(V \times W) &\geq \dim\left((V_{i_0} \times W_j) \cap (V_{i_0} \times W_l)\right) \\ &\geq \dim(V_{i_0} \times Y) = \dim V_{i_0} + \dim Y \geq \operatorname{sdim} V + c(W). \end{aligned}$$

We now deal with the remaining case, when there is no index i_0 with the properties described above. Choose $i \in \{1, \ldots, p\}$ such that $(i, j') \in A$ for some $j' \in \{1, \ldots, q\}$. Then, for all $j \in \{1, \ldots, q\}$, we must have $(i, j) \notin B$, so that $(i, j) \in A$. But there is also a pair $(k, j_0) \in B$; thus $(i, j_0) \in A$ and $(k, j_0) \in B$, and we can use the argument of the previous paragraph, with the rôles of V and W interchanged, to deduce that $c(V \times W) \geq \operatorname{sdim} W + c(V)$. This proves statement (i).

Parts (ii) and (iii) are now immediate from part (i) and 19.2.2. □

19.6.4 Exercise. (i) Let $V := V_{\mathbb{A}^2}(XY)$ (with the notation of 2.3.1). Calculate $\operatorname{sdim}(V \times V)$ and $c(V \times V)$.

(ii) Let V be as in part (i) and let $W := V_{\mathbb{A}^2}(X)$. Calculate $\operatorname{sdim}(V \times W)$ and $c(V \times W)$.

(iii) Show that it is possible for the inequality in 19.6.3(ii) to be an equality when just one of V and W is reducible.

19.6.5 Proposition: the Intersection Inequality for the Connectedness Dimensions of Affine Algebraic Cones. *Let K be an algebraically closed field, let $r \in \mathbb{N}$, and let $C, D \subseteq \mathbb{A}^r(K)$ be affine algebraic cones.*

(i) *We have*

$$c(C \cap D) \geq \min\{\operatorname{sdim} C + \operatorname{sdim} D - 1, \operatorname{sdim} C + c(D), \operatorname{sdim} D + c(C)\} - r.$$

(ii) *Furthermore,*

$$c(C \cap D) \geq \min\{\operatorname{sdim} C + c(D), \operatorname{sdim} D + c(C)\} - r - 1,$$

with strict inequality if C or D is reducible.

(iii) *Consequently, $c(C \cap D) \geq c(C) + c(D) - r - 1 + \varepsilon$, where $\varepsilon = 0, 1$ or 2 according as none, one or both of C and D are reducible.*

Proof. By 19.6.2(i), the product $C \times D \subseteq \mathbb{A}^{2r}(K)$ is an affine algebraic cone, and by 19.6.2(iii) we have $\operatorname{sdim}(C \times D) = \operatorname{sdim} C + \operatorname{sdim} D$. Also, by 19.6.3,

$$c(C \times D) \geq \min\{\operatorname{sdim} C + c(D), \operatorname{sdim} D + c(C)\}.$$

As in 19.6.1, write $K[X_1, \ldots, X_r; Y_1, \ldots, Y_r] = \mathscr{O}(\mathbb{A}^{2r}(K))$, and note that the diagonal $\Delta^{(r)} \subseteq \mathbb{A}^{2r}(K)$ is an affine algebraic cone in $\mathbb{A}^{2r}(K)$. Since $I_{\mathbb{A}^{2r}(K)}(\Delta^{(r)}) = (X_1 - Y_1, \ldots, X_r - Y_r)$, we have

$$I_{\mathbb{A}^{2r}(K)}((C \times D) \cap \Delta^{(r)}) = \sqrt{I_{\mathbb{A}^{2r}(K)}(C \times D) + (X_1 - Y_1, \ldots, X_r - Y_r)}.$$

It therefore follows that $\operatorname{ara}_{C \times D, 0}((C \times D) \cap \Delta^{(r)}) \leq r$. If we now apply 19.4.4(i) to the two affine algebraic cones $(C \times D) \cap \Delta^{(r)} \subseteq C \times D$ in $\mathbb{A}^{2r}(K)$, we obtain

$$c((C \times D) \cap \Delta^{(r)}) \geq \min\{\operatorname{sdim} C + \operatorname{sdim} D - 1, \operatorname{sdim} C + c(D), \operatorname{sdim} D + c(C)\} - r.$$

In view of the homeomorphism provided by 19.6.1(ii), we have

$$c((C \times D) \cap \Delta^{(r)}) = c(C \cap D),$$

and so the claim in (i) is proved.

If C or D is reducible, then so too is $C \times D$ (by 19.6.2(ii)); we can therefore deduce part (ii) from 19.4.4(ii),(iii).

In view of 19.2.2, part (iii) follows from part (ii) if at least one of C, D is irreducible, and so we deal now with the case where both C and D are reducible. Then, by 19.2.2, we have $\operatorname{sdim} C \geq c(C) + 1$ and $\operatorname{sdim} D \geq c(D) + 1$, so that

$$\operatorname{sdim} C + c(D) \geq c(C) + c(D) + 1 \qquad \text{and} \qquad \operatorname{sdim} D + c(C) \geq c(C) + c(D) + 1.$$

We use these inequalities in conjunction with part (ii) to see that

$$\begin{aligned} c(C \cap D) &\geq \min\{\operatorname{sdim} C + c(D), \operatorname{sdim} D + c(C)\} - r - 1 + 1 \\ &\geq c(C) + c(D) + 1 - r - 1 + 1 = c(C) + c(D) - r - 1 + 2. \ \square \end{aligned}$$

We now apply Proposition 19.6.5 to affine cones over projective algebraic sets to deduce the following theorem.

19.6.6 Theorem: the Intersection Inequality for the Connectedness Dimensions of Projective Algebraic Sets. *Let K be an algebraically closed field, let $r \in \mathbb{N}$, and let $V, W \subseteq \mathbb{P}^r(K)$ be non-empty closed sets.*

(i) *We have*

$$c(V \cap W) \geq \min\{\operatorname{sdim} V + \operatorname{sdim} W - 1, \operatorname{sdim} V + c(W), \operatorname{sdim} W + c(V)\} - r.$$

(ii) *Furthermore,*

$$c(V \cap W) \geq \min\{\operatorname{sdim} V + c(W), \operatorname{sdim} W + c(V)\} - r - 1,$$

with strict inequality if V or W is reducible.

(iii) *Consequently, $c(V \cap W) \geq c(V) + c(W) - r - 1 + \varepsilon$, where $\varepsilon = 0, 1$ or 2 according as none, one or both of V and W are reducible.*

Proof. Let $C := \operatorname{Cone}(V) \subseteq \mathbb{A}^{r+1}(K)$ and $D := \operatorname{Cone}(W) \subseteq \mathbb{A}^{r+1}(K)$ be the affine cones in $\mathbb{A}^{r+1}(K)$ over V and W respectively. Note that

$$C \cap D = \operatorname{Cone}(V) \cap \operatorname{Cone}(W) = \operatorname{Cone}(V \cap W).$$

By Lemma 19.5.1, we have $\operatorname{sdim} C = \operatorname{sdim} V + 1$, $\operatorname{sdim} D = \operatorname{sdim} W + 1$,

$$c(C) = c(V) + 1, \qquad c(D) = c(W) + 1, \qquad c(C \cap D) = c(V \cap W) + 1.$$

Moreover, it follows from 14.2.1(v) that C is reducible if and only if V is, and D is reducible if and only if W is. All three parts of the theorem now follow from the corresponding parts of Proposition 19.6.5 applied to the affine algebraic cones $C, D \subseteq \mathbb{A}^{r+1}(K)$. □

Part of Theorem 19.6.6(iii) amounts to the following formulation of the Connectivity Theorem due to W. Fulton and J. Hansen and to G. Faltings.

19.6.7 Corollary: the Connectivity Theorem of Fulton-Hansen (see [16]) **and Faltings** (see [12]). *Let K be an algebraically closed field, let $r \in \mathbb{N}$, and let $V, W \subseteq \mathbb{P}^r(K)$ be projective varieties. Then*

$$c(V \cap W) \geq \dim V + \dim W - r - 1.$$

Proof. By 19.1.10(iii), we have $c(V) = \dim V$ and $c(W) = \dim W$, and so the claim follows from 19.6.6(iii). □

19.6.8 Corollary (W. Fulton and J. Hansen [16, Corollary 1]). *Let K be an algebraically closed field, let $r \in \mathbb{N}$, and let $V, W \subseteq \mathbb{P}^r(K)$ be projective varieties such that* $\dim V + \dim W > r$. *Then $V \cap W$ is connected.*

Proof. By Corollary 19.6.7, we have $c(V \cap W) \geq 0$, so that $V \cap W$ is connected by 19.1.10(i). □

19.6.9 Example. Interpret the polynomial ring $\mathbb{C}[X_1, X_2, X_3]$ as $\mathcal{O}(\mathbb{A}^3)$, as in 2.3.1. In $\mathbb{A}^3$, we consider the two surfaces

$$\mathring{V} := V_{\mathbb{A}^3}(X_1 - X_2X_3) \quad \text{and} \quad \mathring{W} := V_{\mathbb{A}^3}(X_1 + X_2^2 - X_2X_3 - 1).$$

Then

$$\begin{aligned}\mathring{V} \cap \mathring{W} &= V_{\mathbb{A}^3}(X_1 - X_2X_3, X_1 + X_2^2 - X_2X_3 - 1)\\ &= V_{\mathbb{A}^3}(X_1 - X_2X_3, X_2^2 - 1)\\ &= V_{\mathbb{A}^3}(X_1 - X_2X_3, X_2 + 1) \cup V_{\mathbb{A}^3}(X_1 - X_2X_3, X_2 - 1)\\ &= V_{\mathbb{A}^3}(X_1 + X_3, X_2 + 1) \cup V_{\mathbb{A}^3}(X_1 - X_3, X_2 - 1),\end{aligned}$$

so that $\mathring{V} \cap \mathring{W}$ is the union of the two lines $\mathring{L}_1 = V_{\mathbb{A}^3}(X_1 + X_3, X_2 + 1)$ and $\mathring{L}_2 = V_{\mathbb{A}^3}(X_1 - X_3, X_2 - 1)$ and is disconnected. On the other hand,

$$\dim \mathring{V} + \dim \mathring{W} = 2 + 2 > 3$$

and $\mathring{V}$ and $\mathring{W}$ are both irreducible (as their defining polynomials are). Therefore, the analogue of 19.6.8 for affine varieties is not always true.

Now interpret the polynomial ring $\mathbb{C}[X_0, X_1, X_2, X_3]$ as $\mathcal{O}(\mathbb{A}^4)$ and consider the projective varieties $V, W \subseteq \mathbb{P}^3$ defined by

$$V := V_{\mathbb{P}^3}(X_0X_1 - X_2X_3) \quad \text{and} \quad W := V_{\mathbb{P}^3}(X_0X_1 + X_2^2 - X_2X_3 - X_0^2).$$

(Note that both $X_0X_1 - X_2X_3$ and $X_0X_1 + X_2^2 - X_2X_3 - X_0^2$ are irreducible polynomials. One can think of V and W as the projective closures of $\mathring{V}$ and $\mathring{W}$ respectively with respect to the isomorphism of varieties $\sigma_0 : \mathbb{A}^3 \xrightarrow{\cong} U_0\mathbb{P}^3$ of 19.3.7(i): see [22, Chapter I, Exercise 2.9].) Since $\dim V = \dim W = 2$, Corollary 19.6.8 tells us that $V \cap W$ is connected.

Indeed, we have

$$\begin{aligned}V \cap W &= V_{\mathbb{P}^3}(X_0X_1 - X_2X_3, X_0X_1 + X_2^2 - X_2X_3 - X_0^2)\\ &= V_{\mathbb{P}^3}(X_1 + X_3, X_2 + X_0) \cup V_{\mathbb{P}^3}(X_1 - X_3, X_2 - X_0) \cup V_{\mathbb{P}^3}(X_0, X_2)\\ &= L_1 \cup L_2 \cup L,\end{aligned}$$

where $L_1 := V_{\mathbb{P}^3}(X_1 + X_3, X_2 + X_0)$ and $L_2 := V_{\mathbb{P}^3}(X_1 - X_3, X_2 - X_0)$ are the projective closures of $\mathring{L}_1$ and $\mathring{L}_2$ respectively with respect to σ_0, and L is the

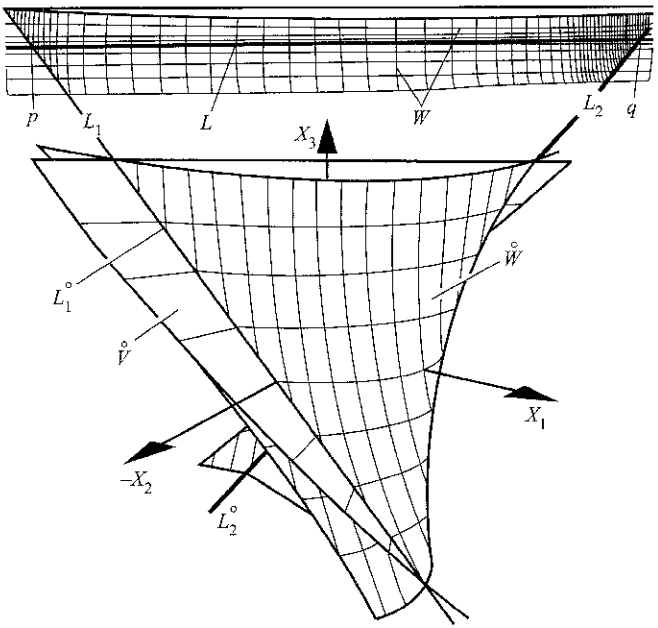

Fig. 19.2.

'line at infinity' $V_{\mathbb{P}^3}(X_0, X_2)$ which intersects L_1 at $p := (0:1:0:-1)$ and L_2 at $q := (0:1:0:1)$. The diagram in Figure 19.2 illustrates the situation.

19.6.10 Exercise. Let $\mathring{V} := V_{\mathbb{A}^3}(X_1^3 + X_1^2 - X_2^2)$ and $\mathring{W} := V_{\mathbb{A}^3}(X_2)$, and

$$V := V_{\mathbb{P}^3}(X_1^3 + X_0X_1^2 - X_0X_2^2), \qquad W := V_{\mathbb{P}^3}(X_2).$$

Determine $\mathring{V} \cap \mathring{W}$ and $V \cap W$.

19.7 The projective spectrum and connectedness

We point out that the proofs we have presented in this chapter of several important results about connectivity, such as the Connectedness Bound for Complete Local Rings 19.2.9, Grothendieck's Connectedness Theorem 19.2.11, the Bertini-Grothendieck Connectivity Theorem 19.5.3, the Intersection Inequality for the Connectedness Dimensions of Projective Algebraic Sets 19.6.6, and the Fulton-Hansen Connectivity Theorem 19.6.7, all depend on one result which has been crucial for our approach, namely Proposition 19.2.7. Furthermore, the only appearance that local cohomology has made so far in this

chapter is in the *proof* of 19.2.7: not only does local cohomology not feature in any of the above-listed results about connectivity, but it does not even feature in the statement of Proposition 19.2.7! The key argument in our proof of that Proposition concerned part of an (exact) Mayer-Vietoris Sequence

$$H^{d-1}_{\mathfrak{a}\cap\mathfrak{b}}(R) \longrightarrow H^d_{\mathfrak{a}+\mathfrak{b}}(R) \longrightarrow H^d_{\mathfrak{a}}(R) \oplus H^d_{\mathfrak{b}}(R),$$

where $(R, \mathfrak{m})$ is a d-dimensional complete local domain and $\mathfrak{a}$ and $\mathfrak{b}$ are non-zero proper ideals of R whose sum is $\mathfrak{m}$-primary. An exact sequence like the one displayed above was considered in [5, p. 484], and so we shall refer to the above sequence as *Rung's display*. We used it in conjunction with the local Lichtenbaum-Hartshorne Vanishing Theorem 8.2.1, the non-vanishing result of 6.1.4, and the vanishing result of 3.3.3. From these few arguments from local cohomology, we have derived far-reaching consequences in algebraic geometry, none of which involves local cohomology in its statement!

Our final part of this chapter is concerned with a graded analogue of Rung's display, which we shall use in conjunction with the Graded Lichtenbaum-Hartshorne Vanishing Theorem 13.1.16 and the result of 15.1.10(ii) in order to prove a ring-theoretic version of Zariski's Main Theorem. To prepare for this, we remind the reader, in 19.7.1 below, of some facts concerning the projective spectrum of a positively graded commutative Noetherian ring.

19.7.1 Reminder and ♯Exercise. Assume that $R = \bigoplus_{n\in\mathbb{N}_0} R_n$ is positively graded.

Recall that the *projective spectrum* $\mathrm{Proj}(R)$ of R is the set $^*\mathrm{Spec}(R) \setminus \mathrm{Var}(R_+)$ of all graded prime ideals of R which do not contain the irrelevant ideal R_+ (see 14.1.1). The *Zariski topology* on $\mathrm{Proj}(R)$ is defined as the topology induced by the Zariski topology on $\mathrm{Spec}(R)$. Note that, since, for an ideal $\mathfrak{b}$ of R, we have $^*\mathrm{Spec}(R) \cap \mathrm{Var}(\mathfrak{b}) = {}^*\mathrm{Spec}(R) \cap \mathrm{Var}(\overline{\mathfrak{b}})$ where $\overline{\mathfrak{b}}$ is the ideal of R generated by all the homogeneous components of all the elements of $\mathfrak{b}$, it follows that the set of closed sets for the Zariski topology on $\mathrm{Proj}(R)$ is

$$\{\mathrm{Proj}(R) \cap \mathrm{Var}(\mathfrak{c}) : \mathfrak{c} \text{ is a graded ideal of } R\}.$$

Let $\pi : \mathrm{Proj}(R) \longrightarrow \mathrm{Spec}(R_0)$ be the natural map, defined by $\pi(\mathfrak{p}) = \mathfrak{p} \cap R_0$ for all $\mathfrak{p} \in \mathrm{Proj}(R)$. In the case when $(R_0, \mathfrak{m}_0)$ is local, we refer to $\pi^{-1}(\mathfrak{m}_0)$ as the *special fibre* of π.

(i) Show that $^*\mathrm{Spec}(R)$, with the topology induced by the Zariski topology on $\mathrm{Spec}(R)$, is a Noetherian topological space.

(ii) Show that $\mathrm{Proj}(R)$ is a Noetherian topological space.

(iii) Show that the set of closed irreducible subsets of $\mathrm{Proj}(R)$ is

$$\{\mathrm{Proj}(R) \cap \mathrm{Var}(\mathfrak{p}) : \mathfrak{p} \in \mathrm{Proj}(R)\}.$$

(iv) Let $\mathfrak{b}$ be a graded ideal of R. Show that

$$\mathrm{Proj}(R) \cap \mathrm{Var}(\mathfrak{b}) = \mathrm{Proj}(R) \cap \mathrm{Var}(\mathfrak{b} \cap R_+),$$

and deduce that each closed set in $\mathrm{Proj}(R)$ can be defined by finitely many homogeneous elements of positive degree in R.

(v) Show that $\pi^{-1}(\mathrm{Var}(\mathfrak{b}_0)) = \mathrm{Proj}(R) \cap \mathrm{Var}(\mathfrak{b}_0 R)$ for each ideal $\mathfrak{b}_0$ of R_0, and deduce that $\pi : \mathrm{Proj}(R) \longrightarrow \mathrm{Spec}(R_0)$ is continuous.

(vi) Let $\mathfrak{b}$ be a graded ideal of R. Show that

$$\pi(\mathrm{Proj}(R) \cap \mathrm{Var}(\mathfrak{b})) = \mathrm{Var}\left(\textstyle\bigcup_{n\in\mathbb{N}}(\mathfrak{b} :_R (R_+)^n) \cap R_0\right).$$

(Here are some hints: show that it is sufficient to prove that, for $\mathfrak{p} \in \mathrm{Proj}(R)$, we have $\pi(\mathrm{Proj}(R) \cap \mathrm{Var}(\mathfrak{p})) = \mathrm{Var}(\mathfrak{p} \cap R_0)$; then show that, in the special case in which $(R_0, \mathfrak{m}_0)$ is local, $R_+ \nsubseteq \sqrt{\mathfrak{m}_0 R + \mathfrak{p}}$ when $\mathfrak{p} \in \mathrm{Proj}(R)$.)

Deduce that π is closed and that $\pi(\mathrm{Proj}(R)) = \mathrm{Var}\left(R_0 \cap \Gamma_{R_+}(R)\right)$.

(vii) Assume that $(R_0, \mathfrak{m}_0)$ is local. Show that, for a graded ideal $\mathfrak{b}$ of R, we have $\mathfrak{m}_0 \in \pi(\mathrm{Proj}(R) \cap \mathrm{Var}(\mathfrak{b}))$ if and only if $R_+ \nsubseteq \sqrt{\mathfrak{m}_0 R + \mathfrak{b}}$. Show that $\pi^{-1}(\mathfrak{m}_0) = \emptyset$ if and only if $\mathrm{Proj}(R) = \emptyset$ and $\pi^{-1}(\mathfrak{m}_0)$ is connected if and only if $\pi^{-1}(Z)$ is connected for each non-empty closed subset Z of $\mathrm{Spec}(R_0)$.

Our next lemma uses the promised graded analogue of Rung's display.

19.7.2 Lemma. *Assume that $R = \bigoplus_{n\in\mathbb{N}_0} R_n$ is positively graded and that $(R_0, \mathfrak{m}_0)$ is local and complete. Then the following statements are equivalent:*

(i) $\mathrm{Proj}(R)$ *is connected;*

(ii) *the special fibre $\pi^{-1}(\mathfrak{m}_0)$ (under the natural map $\pi : \mathrm{Proj}(R) \longrightarrow \mathrm{Spec}(R_0)$ of 19.7.1) is connected.*

Proof. (ii) $\Rightarrow$ (i) This is immediate from Exercise 19.7.1(vii).

(i) $\Rightarrow$ (ii) Since $\mathrm{Proj}(R) \neq \emptyset$, we have $\pi^{-1}(\mathfrak{m}_0) \neq \emptyset$, by 19.7.1(vii), and $R_+ \neq 0$. We can, and do, assume that $\dim R_0 > 0$.

Suppose that $\pi^{-1}(\mathfrak{m}_0) = \mathrm{Proj}(R) \cap \mathrm{Var}(\mathfrak{m}_0 R)$ is disconnected; we shall obtain a contradiction. Then there exist two non-empty closed subsets Z_1, Z_2 of $\mathrm{Proj}(R)$ such that $Z_1 \cap Z_2 = \emptyset$ and $Z_1 \cup Z_2 = \pi^{-1}(\mathfrak{m}_0)$. Let $T_1, \ldots, T_r$ be the distinct irreducible components of $\mathrm{Proj}(R)$, and set

$$A := \{i \in \{1, \ldots, r\} : T_i \cap Z_1 \neq \emptyset\}, \qquad B := \{j \in \{1, \ldots, r\} : T_j \cap Z_2 \neq \emptyset\}.$$

Clearly each of A and B is non-empty, since $Z_1 \neq \emptyset \neq Z_2$. By 19.7.1(vi), the map π is closed; hence, for each $k \in \{1, \ldots, r\}$, we have $\mathfrak{m}_0 \in \pi(T_k)$, so that $T_k \cap (Z_1 \cup Z_2) \neq \emptyset$. This shows that $A \cup B = \{1, \ldots, r\}$.

We show next that $A \cap B \neq \emptyset$. Suppose, on the contrary, that $A \cap B = \emptyset$, and

seek a contradiction. Then $W := \left(\bigcup_{i\in A} T_i\right) \cap \left(\bigcup_{j\in B} T_j\right)$ would be non-empty because $\mathrm{Proj}(R)$ is connected; also, we would have

$$\pi^{-1}(\mathfrak{m}_0) \cap W = (Z_1 \cup Z_2) \cap W = (Z_1 \cap W) \cup (Z_2 \cap W) = \emptyset,$$

contrary to the fact that $\mathfrak{m}_0 \in \pi(W)$ because π is closed (see 19.7.1(vi)). Hence there exists $k \in A \cap B$.

Then $Z_i \cap T_k \neq \emptyset$ for $i = 1, 2$ and so $\pi^{-1}(\mathfrak{m}_0) \cap T_k$ is disconnected. By 19.7.1(iii), there exists $\mathfrak{p} \in \mathrm{Proj}(R)$ for which $T_k = \mathrm{Proj}(R) \cap \mathrm{Var}(\mathfrak{p})$. Let $\overline{R} = \bigoplus_{n\in\mathbb{N}_0} \overline{R}_n = R/\mathfrak{p}$, graded in the natural way, let $\overline{\mathfrak{m}}_0$ be the maximal ideal of $\overline{R}_0$, and let $\overline{\pi} : \mathrm{Proj}(\overline{R}) \longrightarrow \mathrm{Spec}(\overline{R}_0)$ be the natural map. The natural homeomorphism between T_k and $\mathrm{Proj}(\overline{R})$ maps $\pi^{-1}(\mathfrak{m}_0) \cap T_k$ onto $\overline{\pi}^{-1}(\overline{\mathfrak{m}}_0)$, and so this latter special fibre is disconnected. Hence, in our search for a contradiction, we can, and do, assume that the graded ring R is a domain.

There exist graded ideals $\mathfrak{b}$, $\mathfrak{c}$ of R such that

$$\mathrm{Proj}(R) \cap \mathrm{Var}(\mathfrak{b}) \neq \emptyset, \quad \mathrm{Proj}(R) \cap \mathrm{Var}(\mathfrak{c}) \neq \emptyset, \quad \mathrm{Proj}(R) \cap \mathrm{Var}(\mathfrak{b}) \cap \mathrm{Var}(\mathfrak{c}) = \emptyset,$$

and

$$(\mathrm{Proj}(R) \cap \mathrm{Var}(\mathfrak{b})) \cup (\mathrm{Proj}(R) \cap \mathrm{Var}(\mathfrak{c})) = \pi^{-1}(\mathfrak{m}_0).$$

Since $\mathrm{Proj}(R) \cap \mathrm{Var}(\mathfrak{b}) \subseteq \pi^{-1}(\mathfrak{m}_0)$, we have

$$\mathrm{Proj}(R) \cap \mathrm{Var}(\mathfrak{b}) = \mathrm{Proj}(R) \cap \mathrm{Var}(\mathfrak{b} + \mathfrak{m}_0 R),$$

and a similar comment applies to $\mathfrak{c}$; we therefore assume that $\mathfrak{b} \supseteq \mathfrak{m}_0 R$ and $\mathfrak{c} \supseteq \mathfrak{m}_0 R$. We can now deduce that

$$\sqrt{\mathfrak{b} + \mathfrak{c}} = \mathfrak{m}_0 R + R_+ \qquad \text{and} \qquad \sqrt{\mathfrak{b} \cap \mathfrak{c}} = \sqrt{\mathfrak{m}_0 R}.$$

Set $d := \dim R$. We can now use 1.1.3 in conjunction with the Graded Mayer-Vietoris Sequence 13.1.4 to see that there is an exact sequence of graded R-modules and homogeneous homomorphisms

$$H^{d-1}_{\mathfrak{m}_0 R}(R) \longrightarrow H^d_{\mathfrak{m}_0 R + R_+}(R) \longrightarrow H^d_{\mathfrak{b}}(R) \oplus H^d_{\mathfrak{c}}(R).$$

But, by the Graded Lichtenbaum-Hartshorne Vanishing Theorem 13.1.16, we have $H^d_{\mathfrak{b}}(R) = H^d_{\mathfrak{c}}(R) = 0$; also, Lemma 13.1.10 shows that $H^{d-1}_{\mathfrak{m}_0 R}(R)_n \cong H^{d-1}_{\mathfrak{m}_0}(R_n)$ for all $n \in \mathbb{Z}$, and this is 0 for $n < 0$. Hence $H^d_{\mathfrak{m}_0 R + R_+}(R)_n = 0$ for all $n < 0$, contrary to 15.1.10(ii).

19.7.3 Theorem: the Connectedness Criterion for the Special Fibre. *Assume that $R = \bigoplus_{n\in\mathbb{N}_0} R_n$ is positively graded and that $(R_0, \mathfrak{m}_0)$ is local. Let $\widehat{R_0}$ denote the completion of R_0. As in 15.2.2, set $\widehat{R} := R \otimes_{R_0} \widehat{R_0}$; after an obvious identification,*

we can consider $\widehat{R}$ *as a graded ring* $\bigoplus_{n\in\mathbb{N}_0}(R_n \otimes_{R_0} \widehat{R_0})$. *Let* $\pi : \mathrm{Proj}(R) \longrightarrow \mathrm{Spec}(R_0)$ *be the natural map.*

The following statements are equivalent:

(i) $\mathrm{Proj}(\widehat{R})$ *is connected;*

(ii) *the special fibre* $\pi^{-1}(\mathfrak{m}_0)$ *is connected;*

(iii) *for each non-empty closed subset* Z *of* $\mathrm{Spec}(R_0)$, *the set* $\pi^{-1}(Z)$ *is connected.*

Proof. The equivalence of (ii) and (iii) is the subject of part of Exercise 19.7.1(vii).

(i) $\Leftrightarrow$ (ii) Let $\widehat{\pi} : \mathrm{Proj}(\widehat{R}) \longrightarrow \mathrm{Spec}(\widehat{R_0})$ be the natural map. Let $\widehat{\mathfrak{m}_0} = \mathfrak{m}_0\widehat{R_0}$, the maximal ideal of $\widehat{R_0}$. Since there are natural homeomorphisms $\pi^{-1}(\mathfrak{m}_0) \approx \mathrm{Proj}(R/\mathfrak{m}_0R)$ and $\widehat{\pi}^{-1}(\widehat{\mathfrak{m}_0}) \approx \mathrm{Proj}(\widehat{R}/\widehat{\mathfrak{m}_0}\widehat{R})$, and since there is a homogeneous ring isomorphism $R/\mathfrak{m}_0R \xrightarrow{\cong} \widehat{R}/\widehat{\mathfrak{m}_0}\widehat{R}$, there is a homeomorphism $\pi^{-1}(\mathfrak{m}_0) \approx \widehat{\pi}^{-1}(\widehat{\mathfrak{m}_0})$. We can therefore apply Lemma 19.7.2 to complete the proof. □

We are now going to apply the Connectedness Criterion for the Special Fibre 19.7.3 to the (ordinary) Rees ring of an ideal of a commutative Noetherian ring.

19.7.4 Notation. We shall use $\mathscr{R}(\mathfrak{a})$ to denote the ordinary Rees ring $\bigoplus_{n\in\mathbb{N}_0}\mathfrak{a}^n$ of $\mathfrak{a}$. If, as in 18.1.4, we let $\{a_1,\ldots,a_h\}$ be a generating set for $\mathfrak{a}$ and T be an indeterminate, then there is a homogeneous isomorphism of graded R-algebras $\mathscr{R}(\mathfrak{a}) \xrightarrow{\cong} R[a_1T,\ldots,a_hT] =: R[\mathfrak{a}T]$.

19.7.5 Corollary. *Let* $\mathfrak{p} \in \mathrm{Spec}(R)$ *be such that* $\widehat{R_\mathfrak{p}}$ *has only one minimal prime ideal and the ideal* $\mathfrak{a}R_\mathfrak{p}$ *of* $R_\mathfrak{p}$ *is not nilpotent. Let* $\mathscr{R}(\mathfrak{a})$ *denote the ordinary Rees ring of* $\mathfrak{a}$ *(see* 19.7.4*), and let* $\pi_\mathfrak{a} : \mathrm{Proj}(\mathscr{R}(\mathfrak{a})) \longrightarrow \mathrm{Spec}(R)$ *be the natural map. Then the fibre* $\pi_\mathfrak{a}^{-1}(\mathfrak{p})$ *of* $\mathfrak{p}$ *under* $\pi_\mathfrak{a}$ *is connected.*

Proof. We can use localization at $\mathfrak{p}$ to see that it is enough for us to prove the claim under the assumption that $(R,\mathfrak{m})$ is local and $\mathfrak{p} = \mathfrak{m}$; we make this assumption in what follows. Now $\widehat{R}$ is flat over R; also, $\mathscr{R}(\mathfrak{a})$ can be viewed as a subring of $\mathscr{R}(\mathfrak{a}\widehat{R})$ and there is a homogeneous isomorphism of $\mathscr{R}(\mathfrak{a})$-algebras $\mathscr{R}(\mathfrak{a}) \otimes_R \widehat{R} \xrightarrow{\cong} \mathscr{R}(\mathfrak{a}\widehat{R})$. Therefore $\mathrm{Proj}\left(\mathscr{R}(\mathfrak{a}) \otimes_R \widehat{R}\right)$ and $\mathrm{Proj}\left(\mathscr{R}(\mathfrak{a}\widehat{R})\right)$ are homeomorphic. By Theorem 19.7.3, it is sufficient for us to prove that $\mathrm{Proj}(\mathscr{R}(\mathfrak{a}\widehat{R}))$ is connected.

In order to prove this, we let $\widehat{\mathfrak{p}}$ be the unique minimal prime ideal of $\widehat{R}$, and $\mathfrak{P}$ be the ideal of $\mathscr{R}(\mathfrak{a}\widehat{R})$ given by $\mathfrak{P} := \bigoplus_{n\in\mathbb{N}_0}(\mathfrak{a}^n\widehat{R}\cap\widehat{\mathfrak{p}})$; in fact $\mathfrak{P} \in {}^*\mathrm{Spec}(\mathscr{R}(\mathfrak{a}\widehat{R}))$.

Since $\widehat{\mathfrak{p}} = \sqrt{0}$, there exists $t \in \mathbb{N}$ such that $\widehat{\mathfrak{p}}^t = 0$; hence $\mathfrak{P}^t = 0$, so that $\mathfrak{P}$ is the unique minimal prime of $\mathscr{R}(\mathfrak{a}\widehat{R})$.

It follows from the faithful flatness of $R \to \widehat{R}$ that $\mathfrak{a}\widehat{R} \not\subseteq \sqrt{0} = \widehat{\mathfrak{p}}$, and so $\mathfrak{a}^n\widehat{R} \cap \widehat{\mathfrak{p}} \subset \mathfrak{a}^n\widehat{R}$ for all $n \in \mathbb{N}$. Hence

$$\mathfrak{P} \in {}^*\operatorname{Spec}(\mathscr{R}(\mathfrak{a}\widehat{R})) \setminus \operatorname{Var}(\mathscr{R}(\mathfrak{a}\widehat{R})_+) = \operatorname{Proj}(\mathscr{R}(\mathfrak{a}\widehat{R})).$$

As $\mathfrak{P}$ is the unique minimal prime of $\mathscr{R}(\mathfrak{a}\widehat{R})$, we also have $\operatorname{Proj}(\mathscr{R}(\mathfrak{a}\widehat{R})) = \operatorname{Proj}(\mathscr{R}(\mathfrak{a}\widehat{R})) \cap \operatorname{Var}(\mathfrak{P})$. Hence, by 19.7.1(iii), $\operatorname{Proj}(\mathscr{R}(\mathfrak{a}\widehat{R}))$ is irreducible, and so it is connected by 19.1.2(i). □

We are now ready to present the last main connectedness result of this chapter.

19.7.6 Ring-theoretic version of Zariski's Main Theorem. *Assume that R is a domain and that $\mathfrak{a} \neq 0$. Let $\mathfrak{p} \in \operatorname{Spec}(R)$ be such that $\widehat{R_{\mathfrak{p}}}$ is also a domain. Let $\pi_{\mathfrak{a}} : \operatorname{Proj}(\mathscr{R}(\mathfrak{a})) \longrightarrow \operatorname{Spec}(R)$ be the natural map. Then the fibre $\pi_{\mathfrak{a}}^{-1}(\mathfrak{p})$ is connected.* □

19.7.7 Exercise. Assume that R is a domain and that $\mathfrak{a} \neq 0$. Define $\pi_{\mathfrak{a}} : \operatorname{Proj}(\mathscr{R}(\mathfrak{a})) \longrightarrow \operatorname{Spec}(R)$ as in 19.7.5. Let $Z \subseteq \operatorname{Spec}(R)$ be a connected closed subset of $\operatorname{Spec}(R)$ such that $\widehat{R_{\mathfrak{m}}}$ is an integral domain for each maximal ideal $\mathfrak{m}$ of R which belongs to Z. Prove that $\pi_{\mathfrak{a}}^{-1}(Z)$ is connected.

19.7.8 Exercise. Assume that $(R, \mathfrak{m})$ is a local domain and that $\mathfrak{a}$ is non-zero and proper. We use $\mathscr{G}(\mathfrak{a})$ to denote the associated graded ring $\bigoplus_{i \in \mathbb{N}_0} \mathfrak{a}^i/\mathfrak{a}^{i+1}$: see 18.2.1.

(i) Show that, if $\widehat{R}$ is an integral domain, then $\operatorname{Proj}(\mathscr{G}(\mathfrak{a}))$ is connected.

(ii) Show that $\operatorname{Proj}(\mathscr{G}(\mathfrak{m}))$ is connected if and only if $\operatorname{Proj}(\mathscr{R}(\mathfrak{m}\widehat{R}))$ is connected.

19.7.9 Exercise. (i) Let V denote the *Cartesian curve* $V_{\mathbb{A}^2}(X^3 + X^2 - Y^2)$, and let $(R, \mathfrak{m})$ be the local ring $\mathcal{O}_{V,0}$ of the origin 0 on V. Show that $\widehat{R}$ has two minimal primes, and that $\operatorname{Proj}(\mathscr{G}(\mathfrak{m}))$ is a discrete topological space with just two points.

(ii) Let W denote the *cuspidal curve* $V_{\mathbb{A}^2}(X^3 - Y^2)$, and let $(R', \mathfrak{m}')$ be the local ring $\mathcal{O}_{W,0}$ of the origin 0 on W. Show that $\widehat{R'}$ is a domain and that $\operatorname{Proj}(\mathscr{G}(\mathfrak{m}'))$ is a singleton set.

20

Links with sheaf cohomology

In this last chapter we shall develop the links between local cohomology and the cohomology of quasi-coherent sheaves over certain Noetherian schemes. Here we shall assume for the first time that the reader has some basic knowledge about schemes and sheaves: our reference for these topics is Hartshorne's book [22]. The central idea in this chapter is to extend our earlier relations in 2.3.2 and 14.1.3 between ideal transforms and rings of regular functions on varieties to quasi-coherent sheaves over certain Noetherian schemes. We shall be very concerned with a generalization of the 'Deligne Isomorphism' (see [22, Chapter III, Exercise 3.7, p. 217]) which links the group of sections (over an open subset) of an induced sheaf on an affine scheme with an ideal transform. More precisely, let $\widetilde{M}$ denote the sheaf induced by an R-module M on the affine scheme $\operatorname{Spec}(R)$, and let $U = \operatorname{Spec}(R) \setminus \operatorname{Var}(\mathfrak{a})$; then the group of sections $\Gamma(U, \widetilde{M})$ is isomorphic to the ideal transform $D_{\mathfrak{a}}(M)$. We shall use standard techniques involving negative strongly connected sequences of functors to extend this Deligne Isomorphism, and our generalization of it, to produce the Deligne Correspondence 20.3.11. This correspondence provides connections between higher cohomology groups of induced sheaves on the one hand, and local cohomology modules on the other.

We shall also examine the case when R is graded in some detail. Here the central result for us is the Serre-Grothendieck Correspondence 20.3.15, which we shall also derive from the Deligne Isomorphism by standard 'connected sequence' arguments. In this introduction, we mention only some consequences of the Serre-Grothendieck Correspondence for projective schemes. Consider, therefore, the special case in which $R = \bigoplus_{n \in \mathbb{N}_0} R_n$ is positively graded and homogeneous; set

$$T := \operatorname{Proj}(R) = {}^*\operatorname{Spec}(R) \setminus \operatorname{Var}(R_+)$$

and consider the projective scheme $(T, \mathcal{O}_T)$ defined by R (see [22, Chapter II,

§2, p. 76]). If $\mathscr{F}$ is a coherent sheaf of $\mathscr{O}_T$-modules, there is a finitely generated graded R-module N such that $\mathscr{F}$ is isomorphic to the sheaf of $\mathscr{O}_T$-modules associated to N on Proj(R). The classical form of the Serre-Grothendieck Correspondence yields, for each $i \in \mathbb{N}_0$ and $n \in \mathbb{Z}$, an R_0-isomorphism between the i-th cohomology group $H^i(T, \mathscr{F}(n))$ of the twisted sheaf $\mathscr{F}(n)$ and $\mathscr{R}^i D_{R_+}(N)_n$, so that, for $i > 0$, we have $H^i(T, \mathscr{F}(n)) \cong H^{i+1}_{R_+}(N)_n$. These results enable us to deduce quickly, from algebraic results about local cohomology established earlier in the book, significant results about the cohomology of coherent sheaves of $\mathscr{O}_T$-modules. In the final section, we present a few highlights that result from this approach.

20.1 The Deligne Isomorphism

The basic result in this chapter is Theorem 20.1.14, a generalized version of the Deligne Isomorphism. This result is not formulated explicitly in sheaf-theoretic terms, but rather in terms of certain local families of fractions. We now start to develop the notions of 'S-topology' and 'S-local family of fractions' which we shall use in our formulation and proof of Theorem 20.1.14.

20.1.1 Notation and Terminology. (i) Throughout this chapter, we shall use S to denote a non-empty subset of R which is closed under multiplication. It should be noted that we do *not* assume that $1 \in S$. We denote by $\mathfrak{A}_S$ the set $\{(S') : S' \subseteq S\}$ of all ideals of R generated by elements of S. As R is Noetherian, each ideal in $\mathfrak{A}_S$ can be generated by finitely many elements of S. Note that, if $(\mathfrak{a}_i)_{i \in I}$ is a family of ideals in $\mathfrak{A}_S$, then $\sum_{i \in I} \mathfrak{a}_i \in \mathfrak{A}_S$, and if $\mathfrak{b}_1, \ldots, \mathfrak{b}_r \in \mathfrak{A}_S$, then $\prod_{j=1}^r \mathfrak{b}_j \in \mathfrak{A}_S$ too.

(ii) We shall say that a subset T of Spec(R) is *essential with respect to* S precisely when

(a) $T \subseteq \mathrm{Spec}(R) \setminus \mathrm{Var}((S))$;

(b) there exists $\mathfrak{b} \in \mathfrak{A}_S$ such that $T \subseteq \mathrm{Var}(\mathfrak{b})$; and

(c) $\sqrt{\mathfrak{c}} = \bigcap_{\mathfrak{p} \in \mathrm{Var}((S)) \cup (T \cap \mathrm{Var}(\mathfrak{c}))} \mathfrak{p}$ for all $\mathfrak{c} \in \mathfrak{A}_S$.

Observe that condition (a) is automatically satisfied if S contains a unit, that condition (b) is automatically satisfied if S contains 0, and that, for every subset T of Spec(R), we certainly have

$$\sqrt{\mathfrak{c}} \subseteq \bigcap_{\mathfrak{p} \in \mathrm{Var}((S)) \cup (T \cap \mathrm{Var}(\mathfrak{c}))} \mathfrak{p} \qquad \text{for all } \mathfrak{c} \in \mathfrak{A}_S.$$

Note also that condition (a) implies that, for each $\mathfrak{p} \in T$, there exists $s_{\mathfrak{p}} \in S \setminus \mathfrak{p}$.

(iii) Let T be a subset of Spec(R) which is essential with respect to S. It is an easy consequence of the last sentence in part (i) that $\{T \cap \mathrm{Var}(\mathfrak{b}) : \mathfrak{b} \in \mathfrak{A}_S\}$

is the set of closed sets in a topology on T: we refer to this topology as the *S-topology on T*. We denote by $\mathscr{U}_T^{(S)}$ the set of open sets in the S-topology on T: thus $\mathscr{U}_T^{(S)} = \{T \setminus \mathrm{Var}(\mathfrak{b}) : \mathfrak{b} \in \mathfrak{A}_S\}$. For $\mathfrak{p} \in T$, we denote by $\mathscr{U}_{T,\mathfrak{p}}^{(S)}$ the set $\{U \in \mathscr{U}_T^{(S)} : \mathfrak{p} \in U\}$ of all open neighbourhoods of $\mathfrak{p}$ in the S-topology on T.

Since every non-empty set of closed subsets of T (in the S-topology) has a minimal member with respect to inclusion, the S-topology makes T into a Noetherian, and hence (see 19.1.6(i)) quasi-compact, topological space.

We now state the assumptions that will be in force throughout this chapter.

20.1.2 Standard hypotheses. Throughout this chapter, S will denote a non-empty subset of R which is closed under multiplication, $\mathfrak{A}_S$ will denote $\{(S') : S' \subseteq S\}$, T will denote a subset of $\mathrm{Spec}(R)$ which is essential with respect to S (see 20.1.1(ii)), $\mathfrak{a}$ will denote an ideal in $\mathfrak{A}_S$, and M will denote an R-module.

20.1.3 Examples. (i) If $S = R$, then $\mathfrak{A}_S$ is the set of all ideals of R, and $T := \mathrm{Spec}(R)$ is essential with respect to S. The S-topology on T is just the ordinary Zariski topology.

(ii) Assume that $R = \bigoplus_{n\in\mathbb{Z}} R_n$ is graded, and take $S := \bigcup_{n\in\mathbb{Z}} R_n$ to be the set of homogeneous elements of R. Then $\mathfrak{A}_S$ is the set of all graded ideals of R, and $T := {}^*\mathrm{Spec}(R)$ is essential with respect to S. It is easy to see that the S-topology on T is again the ordinary Zariski topology.

20.1.4 ♯Exercise. Assume that $R = \bigoplus_{n\in\mathbb{N}_0} R_n$ is positively graded, and take $S := \bigcup_{n\in\mathbb{N}} R_n$ to be the set of homogeneous elements of R of positive degrees, so that $\mathfrak{A}_S$ is the set of all graded ideals of R which are contained in R_+.

Show that $T := \mathrm{Proj}(R) = {}^*\mathrm{Spec}(R) \setminus \mathrm{Var}(R_+)$ is essential with respect to S, and that the S-topology on T is the Zariski topology.

The next exercise suggests how the notion of S-topology on T can be regarded as a generalization of the Zariski topology on an affine variety.

20.1.5 Exercise. Let V be an affine variety over the algebraically closed field K. Take $R := \mathscr{O}(V)$, and $S := R$; by 20.1.3(i), we know that $T := \mathrm{Spec}(R)$ is essential with respect to S. Let $\max T$ denote the set of all maximal ideals of R; note that $\max T$ is also essential with respect to S (since R is a Hilbert ring), and that the S-topology on $\max T$ is the topology induced from the Zariski topology on T.

Use the Nullstellensatz to show that there is a homeomorphism $j : V \xrightarrow{\approx} \max T$ given by $j(p) = I_V(p)$ for all $p \in V$.

Show that the assignment $U \mapsto U \cap \max T$ defines a bijection between $\mathscr{U}_T^{(S)}$ and $\mathscr{U}_{\max T}^{(S)}$.

We next introduce the notion of 'S-local family of fractions': this generalizes the concept of regular function on a quasi-affine variety.

20.1.6 Notation and Terminology. (The hypotheses of 20.1.2 apply.) Note that $\prod_{\mathfrak{p}\in T}(S \setminus \mathfrak{p}) \neq \emptyset$: a member of this set is called a *family of denominators in S*.

(i) Let $\mathfrak{p} \in T$. Since $S \setminus \mathfrak{p} \neq \emptyset$, we can form the commutative ring $(S \setminus \mathfrak{p})^{-1}R$ and the $(S \setminus \mathfrak{p})^{-1}R$-module $(S \setminus \mathfrak{p})^{-1}M$.

(ii) Let $\emptyset \neq U \in \mathscr{U}_T^{(S)}$. The elements of $\prod_{\mathfrak{p}\in U}(S \setminus \mathfrak{p})^{-1}M$ are called *families of fractions over U with numerators in M and denominators in S*. Such a family $\gamma = (\gamma_{\mathfrak{p}})_{\mathfrak{p}\in U} \in \prod_{\mathfrak{p}\in U}(S \setminus \mathfrak{p})^{-1}M$ is called *local*, or an *S-local family of fractions over U*, if and only if, for each $\mathfrak{q} \in U$, there exist $W \in \mathscr{U}_{T,\mathfrak{q}}^{(S)}$ and $(s, m) \in S \times M$ such that, for each $\mathfrak{p} \in U \cap W$, it is the case that $s \in S \setminus \mathfrak{p}$ and $\gamma_{\mathfrak{p}} = m/s$ in $(S \setminus \mathfrak{p})^{-1}M$.

The set of all S-local families of fractions over U is denoted by $\widetilde{M}(U)$. We set $\widetilde{M}(\emptyset) = 0$.

Note that $\prod_{\mathfrak{p}\in U}(S \setminus \mathfrak{p})^{-1}M$ has a natural structure as a module over the commutative ring $\prod_{\mathfrak{p}\in U}(S \setminus \mathfrak{p})^{-1}R$. It is easy to check that $\widetilde{R}(U)$ is a subring of $\prod_{\mathfrak{p}\in U}(S \setminus \mathfrak{p})^{-1}R$ and that $\widetilde{M}(U)$ is an $\widetilde{R}(U)$-submodule of $\prod_{\mathfrak{p}\in U}(S \setminus \mathfrak{p})^{-1}M$.

(iii) Now let $m \in M$ and let U be as in part (ii). Choose a family of denominators $(s_{\mathfrak{p}})_{\mathfrak{p}\in U} \in \prod_{\mathfrak{p}\in U}(S \setminus \mathfrak{p})$. For each $\mathfrak{p} \in U$, the fraction $s_{\mathfrak{p}}m/s_{\mathfrak{p}} \in (S \setminus \mathfrak{p})^{-1}M$ is independent of the choice of denominator $s_{\mathfrak{p}} \in S \setminus \mathfrak{p}$. We can therefore define a family of fractions

$$\widetilde{m} := \left(\frac{s_{\mathfrak{p}}m}{s_{\mathfrak{p}}}\right)_{\mathfrak{p}\in U} \in \prod_{\mathfrak{p}\in U}(S \setminus \mathfrak{p})^{-1}M,$$

which does not depend on the choice of family of denominators $(s_{\mathfrak{p}})_{\mathfrak{p}\in U}$. Moreover, for $\mathfrak{q} \in U$, we have, for each $\mathfrak{p} \in U \setminus \mathrm{Var}((s_{\mathfrak{q}}))$, the relation $s_{\mathfrak{p}}m/s_{\mathfrak{p}} = s_{\mathfrak{p}}s_{\mathfrak{q}}m/s_{\mathfrak{p}}s_{\mathfrak{q}} = s_{\mathfrak{q}}m/s_{\mathfrak{q}}$ in $(S \setminus \mathfrak{p})^{-1}M$. As $U \setminus \mathrm{Var}((s_{\mathfrak{q}})) \in \mathscr{U}_{T,\mathfrak{q}}^{(S)}$, we thus see that the family of fractions $\widetilde{m}$ is local. We can therefore define a map $\varepsilon_M^U : M \longrightarrow \widetilde{M}(U)$ by $\varepsilon_M^U(m) = \widetilde{m} = (s_{\mathfrak{p}}m/s_{\mathfrak{p}})_{\mathfrak{p}\in U}$ for all $m \in M$.

Note that $\varepsilon_R^U : R \longrightarrow \widetilde{R}(U)$ is a ring homomorphism, and so turns $\widetilde{R}(U)$ into an R-algebra; furthermore, ε_M^U is an R-homomorphism.

(iv) Now let $U, V \in \mathscr{U}_T^{(S)}$ with $\emptyset \neq V \subseteq U$, and let $\gamma = (\gamma_{\mathfrak{p}})_{\mathfrak{p}\in U} \in \widetilde{M}(U)$. Then it is clear that the restriction $\gamma\lceil_V := (\gamma_{\mathfrak{p}})_{\mathfrak{p}\in V}$ belongs to $\widetilde{M}(V)$. We therefore have a *restriction map* $\rho_{UV}\,(= \rho_{UV,M}) : \widetilde{M}(U) \longrightarrow \widetilde{M}(V)$ for which $\rho_{UV}(\gamma) = \gamma\lceil_V$ for all $\gamma \in \widetilde{M}(U)$. Of course, we define $\rho_{U\emptyset} : \widetilde{M}(U) \longrightarrow \widetilde{M}(\emptyset) = 0$ to be the zero map.

It is easy to see that $\rho_{UV,R} : \widetilde{R}(U) \longrightarrow \widetilde{R}(V)$ is a homomorphism of R-algebras and that $\rho_{UV,M} : \widetilde{M}(U) \longrightarrow \widetilde{M}(V)$ is an $\widetilde{R}(U)$-homomorphism. Note also that the diagram

$$\begin{tikzcd} & M \arrow[dl, "\varepsilon_M^U"'] \arrow[dr, "\varepsilon_M^V"] & \\ \widetilde{M}(U) \arrow[rr, "\rho_{UV}"] & & \widetilde{M}(V) \end{tikzcd}$$

commutes.

The next exercise shows that the notion of local family of fractions, as introduced in 20.1.6, can be viewed as a generalization of the notion of regular function on a quasi-affine variety.

20.1.7 Exercise. Let V be an affine variety over the algebraically closed field K, and take $R := \mathcal{O}(V)$, $S := R$ and $T := \operatorname{Spec}(R)$, as in Exercise 20.1.5; let $j : V \xrightarrow{\approx} \max T$ be the homeomorphism introduced in that exercise.

Let $\mathfrak{b}$ be a non-zero ideal of $\mathcal{O}(V)$, and let U be the non-empty open subset

$$\{p \in V : f(p) \neq 0 \text{ for some } f \in \mathfrak{b}\}$$

of V. Observe that $j(U) = \max T \setminus \operatorname{Var}(\mathfrak{b})$.

(i) Recall that, for $p \in U$, we have

$$\mathcal{O}_{V,p} = \mathcal{O}(V)_{I_V(p)} = \mathcal{O}(V)_{j(p)} = (S \setminus j(p))^{-1}R,$$

and that each $f \in \mathcal{O}(U)$ can be viewed as an element of the ring $\mathcal{O}_{V,p}$. Thus we can define a ring homomorphism $\max \iota_U : \mathcal{O}(U) \longrightarrow \widetilde{R}(j(U))$ by the assignment $f \mapsto (f)_{m \in j(U)}$. Show that $\max \iota_U$ is an isomorphism.

(ii) Now let $\widetilde{U}$ be the open subset $T \setminus \operatorname{Var}(\mathfrak{b})$ of $T = \operatorname{Spec}(R)$. Given $\mathfrak{p} \in \widetilde{U}$, there exists $p \in U$ such that $\mathfrak{p} \subseteq j(p)$, so that $R_{j(p)} = (S \setminus j(p))^{-1}R$ can be viewed as a subring of $R_{\mathfrak{p}} = (S \setminus \mathfrak{p})^{-1}R$. Thus we can define a ring homomorphism $\iota_U : \mathcal{O}(U) \longrightarrow \widetilde{R}(\widetilde{U})$ by the assignment $f \mapsto (f)_{\mathfrak{p} \in \widetilde{U}}$. Show that ι_U is an isomorphism.

In 2.3.2, we described, in terms of ideal transforms, the ring of regular functions on a non-empty open subset of an affine algebraic variety over an algebraically closed field. The last exercise therefore shows that, in one special case at least, a ring of local families of fractions can be described in terms of ideal transforms. The next major aim for this chapter is a description of general

modules of local families of fractions in terms of ideal transforms, and we now embark on the preparations for this result.

20.1.8 Lemma. *(The standard hypotheses of* 20.1.2 *apply.) Set* $U := T \setminus \mathrm{Var}(\mathfrak{a})$. *Then*

(i) *for each* $\gamma = (\gamma_{\mathfrak{p}})_{\mathfrak{p}\in U} \in \widetilde{M}(U)$, *there exist* $r \in \mathbb{N}$, $s_1, \ldots, s_r \in S \cap \mathfrak{a}$ *and* $m_1, \ldots, m_r \in M$ *such that* $U = \bigcup_{i=1}^{r} \left(T \setminus \mathrm{Var}((s_i))\right)$ *and* $\gamma_{\mathfrak{p}} = m_i/s_i$ *for all* $\mathfrak{p} \in T \setminus \mathrm{Var}((s_i))$ *(for* $i = 1, \ldots, r$*);*

(ii) $\Gamma_{\mathfrak{a}}(\widetilde{M}(U)) = 0$*; and*

(iii) $\mathrm{Ker}(\varepsilon_M^U) = \Gamma_{\mathfrak{a}}(M)$, *and so is* $\mathfrak{a}$*-torsion.*

Proof. (i) As T is quasi-compact (see 20.1.1(iii)), there exist $n \in \mathbb{N}$, $W_1, \ldots, W_n \in \mathscr{U}_T^{(S)}$, $t_1, \ldots, t_n \in S$ and $l_1, \ldots, l_n \in M$ such that $U = \bigcup_{j=1}^{n} W_j$ and, for each $j = 1, \ldots, n$ and each $\mathfrak{p} \in W_j$, we have $t_j \notin \mathfrak{p}$ and $\gamma_{\mathfrak{p}} = l_j/t_j$.

Let $j \in \{1, \ldots, n\}$. Since $W_j \in \mathscr{U}_T^{(S)}$, there exists $\mathfrak{b}_j \in \mathfrak{A}_S$ such that $W_j = T \setminus \mathrm{Var}(\mathfrak{b}_j)$. Now $W_j \subseteq U = T \setminus \mathrm{Var}(\mathfrak{a})$, and so

$$W_j = W_j \cap U = (T \setminus \mathrm{Var}(\mathfrak{b}_j)) \cap (T \setminus \mathrm{Var}(\mathfrak{a})) = T \setminus \mathrm{Var}(\mathfrak{a}\mathfrak{b}_j).$$

We therefore can, and do, assume that $\mathfrak{b}_j \subseteq \mathfrak{a}$. Suppose that $\mathfrak{b}_j$ is generated by $w_{j1}, \ldots, w_{jn_j} \in S \cap \mathfrak{a}$. Set $W_{jk} := T \setminus \mathrm{Var}((w_{jk}))$ for all $k = 1, \ldots, n_j$; then $W_j = \bigcup_{k=1}^{n_j} W_{jk}$, and, for $k \in \{1, \ldots, n_j\}$ and all $\mathfrak{p} \in W_{jk}$, we have $t_j w_{jk} \in S \setminus \mathfrak{p}$ (so that $W_{jk} = T \setminus \mathrm{Var}((w_{jk})) = T \setminus \mathrm{Var}((t_j w_{jk}))$) and we can write

$$\gamma_{\mathfrak{p}} = \frac{l_j}{t_j} = \frac{w_{jk} l_j}{w_{jk} t_j} \qquad \text{in } (S \setminus \mathfrak{p})^{-1}M.$$

We have therefore only to relabel the pairs $(w_{jk}t_j, w_{jk}l_j) \in (S \cap \mathfrak{a}) \times M$ ($k = 1, \ldots, n_j$, $j = 1, \ldots, n$) in order to complete the proof of part (i).

(ii) Let $\gamma = (\gamma_{\mathfrak{p}})_{\mathfrak{p}\in U} \in \Gamma_{\mathfrak{a}}(\widetilde{M}(U))$. There exists $n \in \mathbb{N}$ such that $\mathfrak{a}^n\gamma = 0$. Consider a $\mathfrak{p} \in U = T \setminus \mathrm{Var}(\mathfrak{a}^n)$. Since $\mathfrak{a}^n \not\subseteq \mathfrak{p}$ and $\mathfrak{a}^n$ can be generated by elements of S, there exists $s_{\mathfrak{p}} \in (S \cap \mathfrak{a}^n) \setminus \mathfrak{p}$. Since $s_{\mathfrak{p}}\gamma = 0$, we have $s_{\mathfrak{p}}\gamma_{\mathfrak{p}} = 0$ and we see that, in $(S \setminus \mathfrak{p})^{-1}M$,

$$\gamma_{\mathfrak{p}} = \frac{1}{s_{\mathfrak{p}}}(s_{\mathfrak{p}}\gamma_{\mathfrak{p}}) = 0.$$

Hence $\gamma = 0$.

(iii) As $\varepsilon_M^U : M \longrightarrow \widetilde{M}(U)$ is an R-homomorphism, we have

$$\varepsilon_M^U(\Gamma_{\mathfrak{a}}(M)) \subseteq \Gamma_{\mathfrak{a}}(\widetilde{M}(U)) = 0$$

(we have used part (ii) here), and so $\mathrm{Ker}(\varepsilon_M^U) \supseteq \Gamma_{\mathfrak{a}}(M)$.

Now let $m \in \operatorname{Ker}(\varepsilon_M^U)$. Choose a family of denominators $(s_\mathfrak{p})_{\mathfrak{p}\in U} \in \prod_{\mathfrak{p}\in U}(S\setminus\mathfrak{p})$. Then $0 = \varepsilon_M^U(m) = (s_\mathfrak{p} m/s_\mathfrak{p})_{\mathfrak{p}\in U}$, and so, for each $\mathfrak{p} \in U$, there exists $t_\mathfrak{p} \in S \setminus \mathfrak{p}$ such that $t_\mathfrak{p} s_\mathfrak{p} m = 0$.

Let $\mathfrak{b} = \sum_{\mathfrak{p}\in U} R t_\mathfrak{p} s_\mathfrak{p}$; then $\mathfrak{b}$ is an ideal belonging to $\mathfrak{A}_S$ and $\mathfrak{b}m = 0$. As, for each $\mathfrak{p} \in U$, we have $t_\mathfrak{p} s_\mathfrak{p} \notin \mathfrak{p}$, it follows that $U \cap \operatorname{Var}(\mathfrak{b}) = \emptyset$, so that $T \cap \operatorname{Var}(\mathfrak{b}) \subseteq \operatorname{Var}(\mathfrak{a})$ and $\operatorname{Var}((S)) \cup (T \cap \operatorname{Var}(\mathfrak{b})) \subseteq \operatorname{Var}(\mathfrak{a})$. Therefore, since T is essential with respect to S,

$$\sqrt{\mathfrak{b}} = \bigcap_{\mathfrak{p}\in\operatorname{Var}((S))\cup(T\cap\operatorname{Var}(\mathfrak{b}))} \mathfrak{p} \supseteq \bigcap_{\mathfrak{p}\in\operatorname{Var}(\mathfrak{a})} \mathfrak{p} = \sqrt{\mathfrak{a}} \supseteq \mathfrak{a}.$$

Thus there exists $h \in \mathbb{N}$ such that $\mathfrak{a}^h \subseteq \mathfrak{b}$; therefore $\mathfrak{a}^h m \subseteq \mathfrak{b}m = 0$ and $m \in \Gamma_\mathfrak{a}(M)$. □

20.1.9 Lemma. *(The standard hypotheses of* 20.1.2 *apply.) Set* $U := T \setminus \operatorname{Var}(\mathfrak{a})$, *and let* $W \in \mathscr{U}_T^{(S)}$ *be such that* $U \subseteq W$. *Consider the restriction homomorphism* $\rho_{WU} : \widetilde{M}(W) \longrightarrow \widetilde{M}(U)$ *of* 20.1.6(iv). *Then* $\operatorname{Ker}(\rho_{WU}) = \Gamma_\mathfrak{a}(\widetilde{M}(W))$.

Proof. By 20.1.8(ii), we have $\rho_{WU}(\Gamma_\mathfrak{a}(\widetilde{M}(W))) \subseteq \Gamma_\mathfrak{a}(\widetilde{M}(U)) = 0$, so that $\operatorname{Ker}(\rho_{WU}) \supseteq \Gamma_\mathfrak{a}(\widetilde{M}(W))$.

There exists $\mathfrak{c} \in \mathfrak{A}_S$ such that $W = T \setminus \operatorname{Var}(\mathfrak{c})$. Let $\gamma = (\gamma_\mathfrak{p})_{\mathfrak{p}\in W} \in \operatorname{Ker}(\rho_{WU})$. By Lemma 20.1.8(i), there exist $r \in \mathbb{N}$, $s_1, \ldots, s_r \in S \cap \mathfrak{c}$ and $m_1, \ldots, m_r \in M$ such that $W = \bigcup_{i=1}^r \big(T \setminus \operatorname{Var}((s_i))\big)$ and, for each $i = 1, \ldots, r$ and each $\mathfrak{p} \in T \setminus \operatorname{Var}((s_i))$, we have $\gamma_\mathfrak{p} = m_i/s_i$. Since $\gamma \in \operatorname{Ker}(\rho_{WU})$, we have $\gamma_\mathfrak{p} = 0$ for all $\mathfrak{p} \in U = T \setminus \operatorname{Var}(\mathfrak{a})$.

Let $i \in \{1, \ldots, r\}$. Set $U' := (T \setminus \operatorname{Var}(\mathfrak{a})) \cap \big(T \setminus \operatorname{Var}((s_i))\big) = T \setminus \operatorname{Var}(s_i\mathfrak{a})$. Then $m_i/s_i = 0$ in $(S \setminus \mathfrak{p})^{-1}M$ for all $\mathfrak{p} \in U'$. This means that $\varepsilon_M^{U'}(m_i) = 0$, so that there exists $h_i \in \mathbb{N}$ such that $(s_i\mathfrak{a})^{h_i} m_i = 0$ by 20.1.8(iii). Let $h := \max\{h_i : i = 1, \ldots, r\}$.

Now let $\mathfrak{p} \in W$. There exists $i \in \{1, \ldots, r\}$ with $\mathfrak{p} \in T \setminus \operatorname{Var}((s_i))$, and then, for all $d \in \mathfrak{a}^h$, we have, in $(S \setminus \mathfrak{p})^{-1}M$,

$$d\gamma_\mathfrak{p} = \frac{dm_i}{s_i} = \frac{ds_i^h m_i}{s_i^{h+1}} = 0.$$

Hence $\mathfrak{a}^h\gamma = 0$, and $\gamma \in \Gamma_\mathfrak{a}(\widetilde{M}(W))$. □

20.1.10 Lemma. *(The standard hypotheses of* 20.1.2 *apply.) Set* $U := T \setminus \operatorname{Var}(\mathfrak{a})$. *The homomorphism* $\varepsilon_M^U : M \longrightarrow \widetilde{M}(U)$ *of* 20.1.6(iii) *has* $\mathfrak{a}$*-torsion cokernel.*

Proof. Let $\gamma = (\gamma_\mathfrak{p})_{\mathfrak{p}\in U} \in \widetilde{M}(U)$. By 20.1.8(i), there exist $r \in \mathbb{N}$, $s_1, \ldots, s_r \in S \cap \mathfrak{a}$ and $m_1, \ldots, m_r \in M$ such that $U = \bigcup_{i=1}^r \big(T \setminus \operatorname{Var}((s_i))\big)$ and, for each $i = 1, \ldots, r$ and each $\mathfrak{p} \in T \setminus \operatorname{Var}((s_i))$, we have $\gamma_\mathfrak{p} = m_i/s_i$.

Let $i \in \{1,\ldots,r\}$, and let $U_i := T \setminus \mathrm{Var}((s_i))$. Then, for each $\mathfrak{p} \in U_i$, we have $s_i\gamma_{\mathfrak{p}} = s_i m_i/s_i$ in $(S \setminus \mathfrak{p})^{-1}M$. But this means that

$$\rho_{UU_i}(s_i\gamma) = s_i\rho_{UU_i}(\gamma) = \varepsilon_M^{U_i}(m_i) = \rho_{UU_i}(\varepsilon_M^U(m_i)),$$

so that $s_i\gamma - \varepsilon_M^U(m_i) \in \mathrm{Ker}(\rho_{UU_i}) = \Gamma_{(s_i)}(\widetilde{M}(U))$ by Lemma 20.1.9. Hence there exists $n_i \in \mathbb{N}$ such that $s_i^{n_i}(s_i\gamma - \varepsilon_M^U(m_i)) = 0$. Define

$$n := \max\{n_i + 1 : i = 1,\ldots,r\}.$$

Then, for all $i = 1,\ldots,r$, we have

$$s_i^n\gamma = s_i^{n-1-n_i}s_i^{n_i}s_i\gamma = s_i^{n-1-n_i}s_i^{n_i}\varepsilon_M^U(m_i) = \varepsilon_M^U(s_i^{n-1}m_i) \in \varepsilon_M^U(M).$$

As $T \setminus \mathrm{Var}\left(\sum_{i=1}^r Rs_i^n\right) = T \setminus \mathrm{Var}\left(\sum_{i=1}^r Rs_i\right) = \bigcup_{i=1}^r U_i = U = T \setminus \mathrm{Var}(\mathfrak{a})$, it follows that $T \cap \mathrm{Var}\left(\sum_{i=1}^r Rs_i^n\right) \subseteq \mathrm{Var}(\mathfrak{a})$. Therefore, since T is essential with respect to S,

$$\sqrt{\textstyle\sum_{i=1}^r Rs_i^n} = \bigcap_{\mathfrak{p}\in\mathrm{Var}((S))\cup\left(T\cap\mathrm{Var}\left(\sum_{i=1}^r Rs_i^n\right)\right)} \mathfrak{p} \supseteq \bigcap_{\mathfrak{p}\in\mathrm{Var}(\mathfrak{a})} \mathfrak{p} = \sqrt{\mathfrak{a}} \supseteq \mathfrak{a}.$$

Thus there exists $h \in \mathbb{N}$ such that $\mathfrak{a}^h \subseteq \sum_{i=1}^r Rs_i^n$, and

$$\mathfrak{a}^h\gamma \subseteq \left(\textstyle\sum_{i=1}^r Rs_i^n\right)\gamma = \sum_{i=1}^r Rs_i^n\gamma \subseteq \varepsilon_M^U(M). \ \square$$

20.1.11 Lemma. *(The standard hypotheses of* 20.1.2 *apply.) Set* $U := T \setminus \mathrm{Var}(\mathfrak{a})$, *and let* $W \in \mathscr{U}_T^{(S)}$ *be such that* $U \subseteq W$. *Consider the restriction homomorphism* $\rho_{WU} : \widetilde{M}(W) \longrightarrow \widetilde{M}(U)$ *of* 20.1.6(iv). *The* R*-module* $\mathrm{Coker}\,\rho_{WU}$ *is* $\mathfrak{a}$*-torsion.*

Proof. Since $\varepsilon_M^U = \rho_{WU} \circ \varepsilon_M^W$ by 20.1.6(iv), $\mathrm{Im}\,\varepsilon_M^U \subseteq \mathrm{Im}\,\rho_{WU}$ and $\mathrm{Coker}\,\rho_{WU}$ is a homomorphic image of $\mathrm{Coker}\,\varepsilon_M^U$. The claim therefore follows from Lemma 20.1.10. $\square$

20.1.12 Remark and Notation. With the hypotheses of 20.1.2, let $h : M \longrightarrow N$ be a homomorphism of R-modules, and let $U \in \mathscr{U}_T^{(S)}$.

(i) Now h induces, for each $\mathfrak{p} \in U$, an $(S\setminus\mathfrak{p})^{-1}R$-homomorphism $(S\setminus\mathfrak{p})^{-1}h : (S \setminus \mathfrak{p})^{-1}M \longrightarrow (S \setminus \mathfrak{p})^{-1}N$. There is therefore induced a $\prod_{\mathfrak{p}\in U}(S \setminus \mathfrak{p})^{-1}R$-homomorphism

$$\prod_{\mathfrak{p}\in U}(S \setminus \mathfrak{p})^{-1}h : \prod_{\mathfrak{p}\in U}(S \setminus \mathfrak{p})^{-1}M \longrightarrow \prod_{\mathfrak{p}\in U}(S \setminus \mathfrak{p})^{-1}N.$$

It is easy to see that the image under this map of an S-local family of fractions over U with numerators in M is an S-local family of fractions over U with

numerators in N. Thus h induces an $\widetilde{R}(U)$-homomorphism $\widetilde{h}(U) : \widetilde{M}(U) \longrightarrow \widetilde{N}(U)$ for which

$$\widetilde{h}(U)\left((\gamma_{\mathfrak{p}})_{\mathfrak{p}\in U}\right) = ((S \setminus \mathfrak{p})^{-1}h(\gamma_{\mathfrak{p}}))_{\mathfrak{p}\in U} \qquad \text{for all } (\gamma_{\mathfrak{p}})_{\mathfrak{p}\in U} \in \widetilde{M}(U).$$

(ii) It is clear that $\widetilde{\mathrm{Id}_M}(U) = \mathrm{Id}_{\widetilde{M}(U)}$, and that if $g : N \longrightarrow L$ is another homomorphism of R-modules, then $\widetilde{g \circ h}(U) = \widetilde{g}(U) \circ \widetilde{h}(U)$. Thus $\widetilde{\cdot}(U)$ is a covariant functor from $\mathscr{C}(R)$ to $\mathscr{C}(\widetilde{R}(U))$. It is straightforward to check that this functor is R-linear (note that an $\widetilde{R}(U)$-module can be regarded as an R-module by means of ε_R^U).

(iii) Now consider a second open set $V \in \mathscr{U}_T^{(S)}$ such that $V \subseteq U$. It is clear that the diagram

$$\begin{tikzcd}
\widetilde{M}(U) \arrow[r, "\widetilde{h}(U)"] \arrow[d, "\rho_{UV,M}"] & \widetilde{N}(U) \arrow[d, "\rho_{UV,N}"] \\
\widetilde{M}(V) \arrow[r, "\widetilde{h}(V)"] & \widetilde{N}(V)
\end{tikzcd}$$

commutes, and so $\rho_{UV} : \widetilde{\cdot}(U) \longrightarrow \widetilde{\cdot}(V)$ is a natural transformation of functors (from $\mathscr{C}(R)$ to $\mathscr{C}(\widetilde{R}(U))$).

(iv) Finally, the diagram

$$\begin{tikzcd}
M \arrow[r, "h"] \arrow[d, "\varepsilon_M^U"] & N \arrow[d, "\varepsilon_N^U"] \\
\widetilde{M}(U) \arrow[r, "\widetilde{h}(U)"] & \widetilde{N}(U)
\end{tikzcd}$$

also commutes, and so $\varepsilon^U : \mathrm{Id} \longrightarrow \widetilde{\cdot}(U)$ is also a natural transformation of functors (from $\mathscr{C}(R)$ to itself).

20.1.13 ♯Exercise. Show that, in the situation of 20.1.12, the functor $\widetilde{\cdot}(U) : \mathscr{C}(R) \longrightarrow \mathscr{C}(\widetilde{R}(U))$ is left exact.

We are now ready to establish the central result of this chapter; this result is a version of the Deligne Isomorphism.

20.1.14 The Deligne Isomorphism Theorem. *(The standard hypotheses of* 20.1.2 *apply.) Set* $U := T \setminus \mathrm{Var}(\mathfrak{a})$.

(i) *There is a unique R-isomorphism* $v_{\mathfrak{a},M} : \widetilde{M}(U) \xrightarrow{\cong} D_{\mathfrak{a}}(M)$ *such that the diagram*

$$\begin{tikzcd} M \arrow[r, "\varepsilon_M^U"] \arrow[dr, "\eta_{\mathfrak{a},M}"'] & \widetilde{M}(U) \arrow[d, "v_{\mathfrak{a},M}", "\cong"'] \\ & D_{\mathfrak{a}}(M) \end{tikzcd}$$

commutes. (Occasionally, $v_{\mathfrak{a},M}$ *will be written as* $v_{\mathfrak{a},M}^U$ *when it is important to stress the dependence on the open set* U*.) Moreover, if* $h : M \longrightarrow N$ *is a homomorphism of R-modules, then the diagram*

$$\begin{tikzcd} \widetilde{M}(U) \arrow[r, "\widetilde{h}(U)"] \arrow[d, "v_{\mathfrak{a},M}", "\cong"'] & \widetilde{N}(U) \arrow[d, "v_{\mathfrak{a},N}", "\cong"'] \\ D_{\mathfrak{a}}(M) \arrow[r, "D_{\mathfrak{a}}(h)"] & D_{\mathfrak{a}}(N) \end{tikzcd}$$

commutes, and so $v_{\mathfrak{a}} : \widetilde{\cdot}(U) \longrightarrow D_{\mathfrak{a}}$ *is a natural equivalence of functors (from* $\mathscr{C}(R)$ *to itself).*

(ii) *The map* $v_{\mathfrak{a},R} : \widetilde{R}(U) \xrightarrow{\cong} D_{\mathfrak{a}}(R)$ *is an isomorphism of R-algebras.*

Proof. By 20.1.8(iii) and 20.1.10, both the kernel and cokernel of ε_M^U are $\mathfrak{a}$-torsion. It is therefore immediate from 2.2.13(ii) that there is a unique R-homomorphism $v_{\mathfrak{a},M} : \widetilde{M}(U) \xrightarrow{\cong} D_{\mathfrak{a}}(M)$ such that the diagram

$$\begin{tikzcd} M \arrow[r, "\varepsilon_M^U"] \arrow[dr, "\eta_{\mathfrak{a},M}"'] & \widetilde{M}(U) \arrow[d, "v_{\mathfrak{a},M}"] \\ & D_{\mathfrak{a}}(M) \end{tikzcd}$$

commutes, and, in fact, it follows from the formula for $v_{\mathfrak{a},M}$ provided by 2.2.13(ii) that this map is monomorphic, since we know from 20.1.8(ii) that $\Gamma_{\mathfrak{a}}(\widetilde{M}(U)) = 0$. Note also that it follows from 2.2.14 that $v_{\mathfrak{a},R}$ is a homomorphism of R-algebras, and so part (ii) will follow from part (i).

To show that $v_{\mathfrak{a},M}$ is surjective, let $y \in D_{\mathfrak{a}}(M)$. Then there exists $n \in \mathbb{N}$ and $h \in \operatorname{Hom}_R(\mathfrak{a}^n, M)$ such that y is the natural image of h in $D_{\mathfrak{a}}(M)$. As $\mathfrak{a}$ is generated by elements of S, there exists, for each $\mathfrak{p} \in U$, an element

$s_{\mathfrak{p}} \in (\mathfrak{a} \cap S) \setminus \mathfrak{p}$. Note that

$$\delta := \left(\frac{h(s_{\mathfrak{p}}^n)}{s_{\mathfrak{p}}^n}\right)_{\mathfrak{p}\in U} \in \prod_{\mathfrak{p}\in U}(S \setminus \mathfrak{p})^{-1}M.$$

Now, for $\mathfrak{q} \in U$, we have, for each $\mathfrak{p} \in U \setminus \mathrm{Var}((s_{\mathfrak{q}}))$, that, in $(S \setminus \mathfrak{p})^{-1}M$,

$$\frac{h(s_{\mathfrak{p}}^n)}{s_{\mathfrak{p}}^n} = \frac{s_{\mathfrak{q}}^n h(s_{\mathfrak{p}}^n)}{s_{\mathfrak{q}}^n s_{\mathfrak{p}}^n} = \frac{h(s_{\mathfrak{q}}^n s_{\mathfrak{p}}^n)}{s_{\mathfrak{q}}^n s_{\mathfrak{p}}^n} = \frac{s_{\mathfrak{p}}^n h(s_{\mathfrak{q}}^n)}{s_{\mathfrak{p}}^n s_{\mathfrak{q}}^n} = \frac{h(s_{\mathfrak{q}}^n)}{s_{\mathfrak{q}}^n},$$

so that δ is an S-local family of fractions over U, that is, $\delta \in \widetilde{M}(U)$. Our immediate aim is to show that $v_{\mathfrak{a},M}(\delta) = y$.

For each $r \in \mathfrak{a}^n$, we have

$$r\delta = \left(r\frac{h(s_{\mathfrak{p}}^n)}{s_{\mathfrak{p}}^n}\right)_{\mathfrak{p}\in U} = \left(\frac{h(rs_{\mathfrak{p}}^n)}{s_{\mathfrak{p}}^n}\right)_{\mathfrak{p}\in U} = \left(\frac{s_{\mathfrak{p}}^n h(r)}{s_{\mathfrak{p}}^n}\right)_{\mathfrak{p}\in U} = \varepsilon_M^U(h(r)).$$

Hence $rv_{\mathfrak{a},M}(\delta) = v_{\mathfrak{a},M}(r\delta) = v_{\mathfrak{a},M}\varepsilon_M^U(h(r)) = \eta_{\mathfrak{a},M}(h(r))$, and this is just the natural image in $D_{\mathfrak{a}}(M)$ of the homomorphism $h' \in \mathrm{Hom}_R(\mathfrak{a}^n, M)$ given by $h'(r') = r'h(r) = rh(r')$ for all $r' \in \mathfrak{a}^n$. We thus see that $rv_{\mathfrak{a},M}(\delta) = ry$ for all $r \in \mathfrak{a}^n$. Hence $v_{\mathfrak{a},M}(\delta) - y \in \Gamma_{\mathfrak{a}}(D_{\mathfrak{a}}(M))$, which is zero by 2.2.8(iv). Thus $v_{\mathfrak{a},M}$ is surjective, and so is an isomorphism.

To prove the second part, we wish to show that, in the diagram

$$\begin{tikzcd}
M \arrow[rr, "h"] \arrow[dr, "\varepsilon_M^U"] \arrow[ddr, "\eta_{\mathfrak{a},M}"'] & & N \arrow[dr, "\varepsilon_N^U"] \arrow[ddr, "\eta_{\mathfrak{a},N}"] & \\
& \widetilde{M}(U) \arrow[rr, "\widetilde{h}(U)"'] \arrow[d, "v_{\mathfrak{a},M}"] & & \widetilde{N}(U) \arrow[d, "v_{\mathfrak{a},N}"] \\
& D_{\mathfrak{a}}(M) \arrow[rr, "D_{\mathfrak{a}}(h)"] & & D_{\mathfrak{a}}(N),
\end{tikzcd}$$

the front square commutes. We know from the first part of this proof that the two side triangles commute; furthermore, the top square commutes by 20.1.12(iv), while the sloping rectangle on the underside commutes because $\eta_{\mathfrak{a}}$ is a natural transformation. Therefore

$$v_{\mathfrak{a},N} \circ \widetilde{h}(U) \circ \varepsilon_M^U = v_{\mathfrak{a},N} \circ \varepsilon_N^U \circ h = \eta_{\mathfrak{a},N} \circ h = D_{\mathfrak{a}}(h) \circ \eta_{\mathfrak{a},M} = D_{\mathfrak{a}}(h) \circ v_{\mathfrak{a},M} \circ \varepsilon_M^U.$$

However, by 2.2.11(ii), 20.1.8(iii) and 20.1.10, there is a unique R-homomorphism $h' : \widetilde{M}(U) \to D_{\mathfrak{a}}(N)$ such that the diagram

$$\begin{tikzcd} M \arrow[r, "\varepsilon_M^U"] \arrow[d, "h"'] & \widetilde{M}(U) \arrow[d, "h'"] \\ N \arrow[r, "\eta_{\mathfrak{a},N}"] & D_{\mathfrak{a}}(N) \end{tikzcd}$$

commutes, and so $\nu_{\mathfrak{a},N} \circ \widetilde{h}(U) = D_{\mathfrak{a}}(h) \circ \nu_{\mathfrak{a},M}$, as required. □

20.1.15 Exercise. Consider the special case of the situation of 20.1.12 in which $R = K[X, Y]$ is the polynomial ring in two indeterminates over a field K, and take $S = R$ and $T = \operatorname{Spec}(R)$, so that T is essential with respect to S (see 20.1.3(i)). Let $U := T \setminus \operatorname{Var}((X, Y))$. Use the natural homomorphism $R \to R/XR$ to show that the functor $\widetilde{\cdot}(U) : \mathscr{C}(R) \longrightarrow \mathscr{C}(\widetilde{R}(U))$ is not exact.

The following exercise shows that Theorem 20.1.14 can indeed be viewed as a natural generalization of the isomorphism established in 2.3.2.

20.1.16 Exercise. Consider again the situation of Exercises 20.1.5 and 20.1.7, so that V is an affine variety over the algebraically closed field K, $R := \mathcal{O}(V)$, $S := R$, $T := \operatorname{Spec}(R)$, $\mathfrak{b}$ is a non-zero ideal of $\mathcal{O}(V)$, U is the open subset of V determined by $\mathfrak{b}$, and $\widetilde{U}$ is the open subset $T \setminus \operatorname{Var}(\mathfrak{b})$ of $T = \operatorname{Spec}(R)$.

Let $j : V \xrightarrow{\approx} \max T$ be the homeomorphism of 20.1.5, and consider the ring isomorphisms $\iota_U : \mathcal{O}(U) \longrightarrow \widetilde{R}(\widetilde{U})$ and $\max \iota_U : \mathcal{O}(U) \longrightarrow \widetilde{R}(j(U))$ of 20.1.7. Show that both $\nu_{\mathfrak{b},R}^{\widetilde{U}} \circ \iota_U : \mathcal{O}(U) \longrightarrow D_{\mathfrak{b}}(R)$ and $\nu_{\mathfrak{b},R}^{j(U)} \circ \max \iota_U : \mathcal{O}(U) \longrightarrow D_{\mathfrak{b}}(R)$ coincide with the isomorphism $\nu_{V,\mathfrak{b}}$ of 2.3.2.

20.1.17 ⋕Exercise. Consider again the situation and notation of the Deligne Isomorphism Theorem 20.1.14.

(i) Show that, when $D_{\mathfrak{a}}(M)$ is regarded as an $\widetilde{R}(U)$-module by means of $\nu_{\mathfrak{a},R}$, the map $\nu_{\mathfrak{a},M} : \widetilde{M}(U) \xrightarrow{\cong} D_{\mathfrak{a}}(M)$ is an $\widetilde{R}(U)$-isomorphism.

(ii) Let $\mathfrak{b} \in \mathfrak{A}_S$ be such that $\mathfrak{a} \subseteq \mathfrak{b}$, and set $W := T \setminus \operatorname{Var}(\mathfrak{b})$. Show that the diagram

$$\begin{tikzcd} \widetilde{M}(W) \arrow[r, "\rho_{WU}"] \arrow[d, "\nu_{\mathfrak{b},M}", "\cong"'] & \widetilde{M}(U) \arrow[d, "\nu_{\mathfrak{a},M}", "\cong"'] \\ D_{\mathfrak{b}}(M) \arrow[r, "\alpha_{\mathfrak{b},\mathfrak{a},M}"] & D_{\mathfrak{a}}(M) \end{tikzcd},$$

in which $\alpha_{\mathfrak{b},\mathfrak{a},M}$ is the natural map of 2.2.20, commutes.

20.1.18 ♯Exercise. Consider once more the situation and notation of the Deligne Isomorphism Theorem 20.1.14.

(i) Show that if $\mathfrak{a}$ contains a poor M-sequence of length 2, then the homomorphism $\varepsilon_M^U : M \longrightarrow \widetilde{M}(U)$ of 20.1.6(iii) is an isomorphism.

(ii) Deduce that, if S contains a unit of R, then $\varepsilon_M^T : M \longrightarrow \widetilde{M}(T)$ is an isomorphism.

20.1.19 Exercise. Let V be an affine variety over the algebraically closed field K, take $R := \mathcal{O}(V)$, let (as in 20.1.2) S be a non-empty subset of R which is closed under multiplication, and let T be a subset of $\mathrm{Spec}(R)$ which is essential with respect to S. Let $\mathfrak{b}$ be a non-zero ideal of $\mathfrak{A}_S$, and let $U = T \setminus \mathrm{Var}(\mathfrak{b})$.

Show that the functor $\widetilde{\cdot}(U) : \mathscr{C}(R) \longrightarrow \mathscr{C}(\widetilde{R}(U))$ is exact if and only if the open subset of V determined by $\mathfrak{b}$ is affine.

20.2 The graded Deligne Isomorphism

We now intend to 'add graded frills' to the Deligne Isomorphism Theorem 20.1.14: we shall call the refined version the 'Graded Deligne Isomorphism Theorem'. One can view this refinement process as analogous to the improvement, in the case of rings of regular functions on affine varieties, in Theorem 2.3.2 afforded, in the graded case, by Proposition 14.1.3. For this work, we introduce the concept of 'homogeneous S-local family of fractions'.

20.2.1 Hypotheses for the Section. The standard hypotheses of 20.1.2 will be in force throughout this section, and, in addition, we shall assume that $R = \bigoplus_{n\in\mathbb{Z}} R_n$ and $M = \bigoplus_{n\in\mathbb{Z}} M_n$ are graded, and that S consists entirely of homogeneous elements (so that all the ideals in $\mathfrak{A}_S$ are graded).

20.2.2 Remark and Notation. (The hypotheses of 20.2.1 apply.) Let $U \in \mathscr{U}_T^{(S)}$ and suppose that $U \neq \emptyset$.

(i) For each $\mathfrak{p} \in U$, the non-empty set $S \setminus \mathfrak{p}$ consists entirely of homogeneous elements, so that $(S \setminus \mathfrak{p})^{-1}R$ carries a natural grading, and the $(S \setminus \mathfrak{p})^{-1}R$-module $(S \setminus \mathfrak{p})^{-1}M$ is also naturally graded; note also that the natural ring homomorphism $R \longrightarrow (S \setminus \mathfrak{p})^{-1}R$ is homogeneous in the sense of 13.1.2. For $n \in \mathbb{Z}$, we use $((S \setminus \mathfrak{p})^{-1}R)_n$ and $((S \setminus \mathfrak{p})^{-1}M)_n$ to denote the n-th components of $(S \setminus \mathfrak{p})^{-1}R$ and $(S \setminus \mathfrak{p})^{-1}M$ respectively.

(ii) Let $n \in \mathbb{Z}$. The elements of $\prod_{\mathfrak{p}\in U}((S \setminus \mathfrak{p})^{-1}M)_n$ are called *families of homogeneous fractions of degree n over U with numerators in M and denominators in S*. The set $\widetilde{M}(U) \cap \prod_{\mathfrak{p}\in U}((S \setminus \mathfrak{p})^{-1}M)_n$ of such families which are also

local will be denoted by $\widetilde{M}(U)_n$; the members of $\widetilde{M}(U)_n$ are called *homogeneous S-local families of fractions of degree n over U*.

(iii) Let $n, t \in \mathbb{Z}$. It is easy to check that $\widetilde{R}(U)_0$ is an R_0-subalgebra of $\widetilde{R}(U)$, that $\widetilde{M}(U)_n$ is an $\widetilde{R}(U)_0$-submodule of $\widetilde{M}(U)$, and that $\sigma\gamma \in \widetilde{M}(U)_{n+t}$ for all $\sigma \in \widetilde{R}(U)_n$ and all $\gamma \in \widetilde{M}(U)_t$. An important aim for us is to establish that the $\widetilde{R}(U)_n$ $(n \in \mathbb{Z})$ provide a grading on $\widetilde{R}(U)$, and that the $\widetilde{M}(U)_n$ $(n \in \mathbb{Z})$ provide a grading on the $\widetilde{R}(U)$-module $\widetilde{M}(U)$. Lemma 20.2.3 below provides a key for the establishment of this aim.

(iv) Let $\gamma = (\gamma_\mathfrak{p})_{\mathfrak{p}\in U} \in \prod_{\mathfrak{p}\in U}(S \setminus \mathfrak{p})^{-1}M$, and let $n \in \mathbb{Z}$. Then, for each $\mathfrak{p} \in U$, the element $\gamma_\mathfrak{p}$ of the graded $(S \setminus \mathfrak{p})^{-1}R$-module $(S \setminus \mathfrak{p})^{-1}M$ has n-th component, denoted by $(\gamma_\mathfrak{p})_n$, in $((S \setminus \mathfrak{p})^{-1}M)_n$. We shall refer to the family $\gamma_n := ((\gamma_\mathfrak{p})_n)_{\mathfrak{p}\in U} \in \prod_{\mathfrak{p}\in U}((S \setminus \mathfrak{p})^{-1}M)_n$ as the *n-th homogeneous part of the family* γ.

20.2.3 Lemma. *(The hypotheses of* 20.2.1 *apply.) Let* $\emptyset \neq U \in \mathscr{U}_T^{(S)}$ *and let* $\gamma = (\gamma_\mathfrak{p})_{\mathfrak{p}\in U} \in \widetilde{M}(U)$. *Then*

(i) $\gamma_n := \big((\gamma_\mathfrak{p})_n\big)_{\mathfrak{p}\in U} \in \widetilde{M}(U)_n$ *for each* $n \in \mathbb{Z}$;

(ii) *the set* $\{n \in \mathbb{Z} : \gamma_n \neq 0\}$ *is finite;*

(iii) $\gamma = \sum_{n\in\mathbb{Z}} \gamma_n$; *and*

(iv) $\gamma = 0$ *if and only if* $\gamma_n = 0$ *for all* $n \in \mathbb{Z}$.

Proof. Because T is quasi-compact (see 20.1.1(iii)), there exist $r \in \mathbb{N}$, $W_1, \ldots, W_r \in \mathscr{U}_T^{(S)}$, $t_1, \ldots, t_r \in S$ and $l_1, \ldots, l_r \in M$ such that $U = \bigcup_{j=1}^r W_i$ and, for each $j = 1, \ldots, r$ and each $\mathfrak{p} \in W_j$, we have $t_j \notin \mathfrak{p}$ and $\gamma_\mathfrak{p} = l_j/t_j$. For each $j = 1, \ldots, r$, let $d_j \in \mathbb{Z}$ be such that $t_j \in R_{d_j}$ (recall that S consists of homogeneous elements of R), and let $(l_j)_i$ denote the i-th homogeneous component of l_j (for all $i \in \mathbb{Z}$).

(i) It is obvious that, for each $j = 1, \ldots, r$,

$$(\gamma_\mathfrak{p})_n = \left(\frac{l_j}{t_j}\right)_n = \frac{(l_j)_{n+d_j}}{t_j} \qquad \text{for all } \mathfrak{p} \in W_j.$$

Hence the family $\gamma_n := ((\gamma_\mathfrak{p})_n)_{\mathfrak{p}\in U}$ is local, and so lies in $\widetilde{M}(U)_n$.

(ii) For each $j = 1, \ldots, r$, let H_j denote the finite set $\{n \in \mathbb{Z} : (l_j)_{n+d_j} \neq 0\}$, and observe that $(\gamma_\mathfrak{p})_n = 0$ for all $n \in \mathbb{Z} \setminus H_j$ and all $\mathfrak{p} \in W_j$. Hence $\gamma_n = 0$ for all $n \in \mathbb{Z} \setminus (H_1 \cup \ldots \cup H_r)$.

(iii) As $\gamma_\mathfrak{p} = \sum_{n\in\mathbb{Z}}(\gamma_\mathfrak{p})_n$ for each $\mathfrak{p} \in U$, this is now immediate from (ii).

(iv) Just note that $\gamma = 0$ if and only if $\gamma_\mathfrak{p} = 0$ for all $\mathfrak{p} \in U$, and that this is the case if and only if $(\gamma_\mathfrak{p})_n = 0$ for all $\mathfrak{p} \in U$ and all $n \in \mathbb{Z}$. □

20.2.4 Remark and Definition. (The hypotheses of 20.2.1 apply.) It is now immediate from 20.2.2(iii) and Lemma 20.2.3 that $\left(\widetilde{R}(U)_n\right)_{n\in\mathbb{Z}}$ provides a grading on the ring $\widetilde{R}(U)$, and that $\left(\widetilde{M}(U)_n\right)_{n\in\mathbb{Z}}$ provides $\widetilde{M}(U)$ with the structure of a graded $\widetilde{R}(U)$-module: we refer to these gradings as the *natural gradings*, and any unexplained references to gradings on $\widetilde{R}(U)$ and $\widetilde{M}(U)$ should always be interpreted as references to these natural gradings.

20.2.5 Remarks. (The hypotheses of 20.2.1 apply.)

(i) It is clear that the map $\varepsilon_M^U : M \longrightarrow \widetilde{M}(U)$ of 20.1.6(iii) is homogeneous.

(ii) Let $V \in \mathscr{U}_T^{(S)}$ with $V \subseteq U$. It is also clear that the restriction map $\rho_{UV}\ (= \rho_{UV,M}) : \widetilde{M}(U) \longrightarrow \widetilde{M}(V)$ of 20.1.6(iv) is homogeneous.

(iii) Now let N be a second graded R-module and let $h : M \longrightarrow N$ be a homogeneous R-homomorphism. It is easy to check that the $\widetilde{R}(U)$-homomorphism $\widetilde{h}(U) : \widetilde{M}(U) \longrightarrow \widetilde{N}(U)$ of 20.1.12(i) is homogeneous.

20.2.6 ♯Exercise. (The hypotheses of 20.2.1 apply.) Let $t \in \mathbb{Z}$. This exercise involves the t-th shift functor described in 12.1.1.

(i) Use the fact that $(S \setminus \mathfrak{p})^{-1}(M(t)) = ((S \setminus \mathfrak{p})^{-1}M)(t)$ for all $\mathfrak{p} \in U$ to show that $\widetilde{M(t)}(U) = \widetilde{M}(U)(t)$.

(ii) Let $V \in \mathscr{U}_T^{(S)}$ with $V \subseteq U$. Show that $\rho_{UV,M(t)} = \rho_{UV,M}(t)$, that is, that the restriction homomorphism $\rho_{UV,M(t)} : \widetilde{M(t)}(U) \longrightarrow \widetilde{M(t)}(V)$ is the t-th shift of the restriction homomorphism $\rho_{UV,M} : \widetilde{M}(U) \longrightarrow \widetilde{M}(V)$.

(iii) Let N be a second graded R-module and let $h : M \longrightarrow N$ be a homogeneous R-homomorphism. Show that $\widetilde{h(t)}(U) = \widetilde{h}(U)(t)$.

Our promised Graded Deligne Isomorphism Theorem can now be obtained very quickly.

20.2.7 The Graded Deligne Isomorphism Theorem. *(The hypotheses of* 20.2.1 *apply.) Let* $U := T \setminus \mathrm{Var}(\mathfrak{a})$.

Then the Deligne Isomorphism $v_{\mathfrak{a},M}\ (= v_{\mathfrak{a},M}^U) : \widetilde{M}(U) \xrightarrow{\cong} D_{\mathfrak{a}}(M)$ *of* 20.1.14 *is a homogeneous R-homomorphism (with respect to the natural grading of* 20.2.4 *on* $\widetilde{M}(U)$ *and the grading of* 12.2.10 *on* $D_{\mathfrak{a}}(M)$*).*

Proof. Since $\mathfrak{a}$ is graded, $\widetilde{M}(U)$ is graded by 20.2.4, and $\varepsilon_M^U : M \longrightarrow \widetilde{M}(U)$ is homogeneous by 20.2.5(i), this result is now immediate from 12.4.2 and the Deligne Isomorphism Theorem 20.1.14. □

20.2.8 Remarks. (The hypotheses of 20.2.1 apply.) Let $U := T \setminus \mathrm{Var}(\mathfrak{a})$.

(i) It is clear from 20.2.4 and 20.2.5 that the functor $\widetilde{\cdot}(U) : \mathscr{C}(R) \longrightarrow \mathscr{C}(\widetilde{R}(U))$ has the *restriction property of 12.2.1, and that the natural transformation $\varepsilon^U : \mathrm{Id} \longrightarrow \widetilde{\cdot}(U)$ has the *restriction property of 12.2.3.

(ii) Let $V \in \mathscr{U}_T^{(S)}$ with $V \subseteq U$. By 20.2.5, the natural transformation of functors $\rho_{UV} : \widetilde{\cdot}(U) \longrightarrow \widetilde{\cdot}(V)$ (from $\mathscr{C}(R)$ to $\mathscr{C}(\widetilde{R}(U))$) of 20.1.12(iii) has the *restriction property.

(iii) It follows from 20.2.7 that $\nu_{\mathfrak{a},M}$ is a homogeneous R-isomorphism; by 20.1.17(i), it is also an $\widetilde{R}(U)$-isomorphism; since the natural grading on $\widetilde{M}(U)$ is a grading of this as an $\widetilde{R}(U)$-module, it is therefore automatic that the grading of 12.2.10 on $D_{\mathfrak{a}}(M)$ is a grading of $D_{\mathfrak{a}}(M)$ as an $\widetilde{R}(U)$-module. Hence $D_{\mathfrak{a}} : \mathscr{C}(R) \longrightarrow \mathscr{C}(\widetilde{R}(U))$ has the *restriction property, and $\nu_{\mathfrak{a}} : \widetilde{\cdot}(U) \longrightarrow D_{\mathfrak{a}}$, when viewed as a natural equivalence of functors from $\mathscr{C}(R)$ to $\mathscr{C}(\widetilde{R}(U))$ (or, for that matter, from $\mathscr{C}(R)$ to itself), has the *restriction property.

20.3 Links with sheaf theory

Most serious readers of this chapter will by now have realised that, in view of the results we have obtained about local families of fractions, we have essentially started to discuss sheaves, even if only implicitly. We now intend to make the connection more explicit, and to formulate 20.1.14 and 20.2.7 in sheaf-theoretic terms. Henceforth, we assume that the reader has some familiarity with basic knowledge about schemes and sheaves, although we provide numerous references to Hartshorne's book [22].

20.3.1 Remarks and ♯Exercise: Sheaf-theoretic Interpretations. (The standard hypotheses of 20.1.2 apply.)

(i) It is not difficult to check that the family $\left(\widetilde{R}(U)\right)_{U \in \mathscr{U}_T^{(S)}}$, together with the restriction maps $\rho_{UV,R} : \widetilde{R}(U) \longrightarrow \widetilde{R}(V)$ ($U, V \in \mathscr{U}_T^{(S)}$ with $V \subseteq U$) defines a sheaf $\widetilde{R}$ of R-algebras on the topological space T, so that $(T, \widetilde{R})$ is a *ringed space* (see [22, Chapter II, §2, p. 72]).

(ii) Similarly, the family $\left(\widetilde{M}(U)\right)_{U \in \mathscr{U}_T^{(S)}}$, together with the restriction maps $\rho_{UV,M} : \widetilde{M}(U) \longrightarrow \widetilde{M}(V)$ ($U, V \in \mathscr{U}_T^{(S)}$ with $V \subseteq U$), defines a *sheaf $\widetilde{M}$ of $\widetilde{R}$-modules on T* (see [22, Chapter II, §5, p. 109]). We shall call this sheaf $\widetilde{M}$ the *S-sheaf induced by M*. We shall sometimes use standard notation from sheaf theory (see [22, Chapter II, §1, p. 61]) and denote $\widetilde{M}(U)$ by $\Gamma(U, \widetilde{M})$: the elements of $\Gamma(U, \widetilde{M})$ are the *sections* of the sheaf $\widetilde{M}$ over U.

(iii) Now let $h : M \longrightarrow N$ be a homomorphism of R-modules. It follows from 20.1.12(i),(iii) that the homomorphisms $\widetilde{h}(U) : \widetilde{M}(U) \longrightarrow \widetilde{N}(U)$ ($U \in \mathscr{U}_T^{(S)}$)

define a *morphism* $\widetilde{h} : \widetilde{M} \longrightarrow \widetilde{N}$ *of sheaves of* $\widetilde{R}$*-modules* (see [22, Chapter II, §5, p. 109]), which we call the *morphism induced by* h.

(iv) It is now clear that $\widetilde{\cdot}$ is a functor from $\mathscr{C}(R)$ to the category $\mathscr{S}(\widetilde{R})$ of sheaves of $\widetilde{R}$-modules.

(v) Let $\mathfrak{p} \in T$. The *stalk* $\widetilde{R}_{\mathfrak{p}} := \varinjlim_{U \in \mathscr{U}_{T,\mathfrak{p}}^{(S)}} \widetilde{R}(U)$ of the sheaf $\widetilde{R}$ at $\mathfrak{p}$ (see [22, Chapter II, §1, p. 62]) has a natural structure as an R-algebra. Also, the stalk $\widetilde{M}_{\mathfrak{p}} := \varinjlim_{U \in \mathscr{U}_{T,\mathfrak{p}}^{(S)}} \widetilde{M}(U)$ of $\widetilde{M}$ at $\mathfrak{p}$ has a natural structure as an $\widetilde{R}_{\mathfrak{p}}$-module. For $U \in \mathscr{U}_{T,\mathfrak{p}}^{(S)}$, we shall use $\rho_{U,\mathfrak{p}} (= \rho_{U,\mathfrak{p},M}) : \widetilde{M}(U) \longrightarrow \widetilde{M}_{\mathfrak{p}}$ to denote the natural map; thus $\rho_{U,\mathfrak{p},R}$ is a homomorphism of R-algebras and $\rho_{U,\mathfrak{p},M}$ is an $\widetilde{R}(U)$-homomorphism.

The universal property of direct limits leads to a map $\psi_M^{\mathfrak{p}} : \widetilde{M}_{\mathfrak{p}} \longrightarrow (S \setminus \mathfrak{p})^{-1}M$ for which $\psi_M^{\mathfrak{p}}(\rho_{U,\mathfrak{p},M}(\gamma)) = \gamma_{\mathfrak{p}}$ for all $U \in \mathscr{U}_{T,\mathfrak{p}}^{(S)}$ and $\gamma = (\gamma_{\mathfrak{q}})_{\mathfrak{q} \in U} \in \widetilde{M}(U)$. Show that $\psi_R^{\mathfrak{p}}$ is an isomorphism of R-algebras, and that, as M varies through $\mathscr{C}(R)$, the $\psi_M^{\mathfrak{p}}$ constitute a natural equivalence $\psi^{\mathfrak{p}} : \widetilde{\cdot}_{\mathfrak{p}} \longrightarrow (S \setminus \mathfrak{p})^{-1}$ of functors from $\mathscr{C}(R)$ to itself.

Deduce that the functor $\widetilde{\cdot} : \mathscr{C}(R) \longrightarrow \mathscr{S}(\widetilde{R})$ of part (iv) is exact (see [22, Chapter II, Exercise 1.2(c), p. 66]).

20.3.2 ♯Exercise. (The standard hypotheses of 20.1.2 apply.) Let $h : L \longrightarrow N$ be a homomorphism of R-modules.

(i) Show that the induced sheaf $\widetilde{M}$ is zero if and only if the R-module M is (S)-torsion.

(ii) Show that the induced morphism $\widetilde{h} : \widetilde{L} \longrightarrow \widetilde{N}$ of sheaves of $\widetilde{R}$-modules is injective (respectively surjective) if and only if $\operatorname{Ker} h$ (respectively $\operatorname{Coker} h$) is (S)-torsion.

20.3.3 The Deligne Isomorphism Theorem again. (The standard hypotheses of 20.1.2 apply.) Let $U := T \setminus \operatorname{Var}(\mathfrak{a})$. Here we reformulate the Deligne Isomorphism Theorem in the language of sheaves.

(i) The functor $\widetilde{\cdot}(U) : \mathscr{C}(R) \longrightarrow \mathscr{C}(\widetilde{R}(U))$ of 20.1.12(ii) can be regarded as the composition of the functor $\widetilde{\cdot} : \mathscr{C}(R) \longrightarrow \mathscr{S}(\widetilde{R})$ of 20.3.1(iv) and the section functor $\Gamma(U, \cdot) : \mathscr{S}(\widetilde{R}) \longrightarrow \mathscr{C}(\widetilde{R}(U))$. Therefore, the Deligne Isomorphism Theorem 20.1.14, with the refinement afforded by Exercise 20.1.17(i), provides a natural equivalence $\nu_{\mathfrak{a}} : \Gamma(U, \widetilde{\cdot}) \xrightarrow{\cong} D_{\mathfrak{a}}$ of functors from $\mathscr{C}(R)$ to $\mathscr{C}(\widetilde{R}(U))$. Of course, we can interpret both $D_{\mathfrak{a}}$ and $\Gamma(U, \widetilde{\cdot})$ as functors from $\mathscr{C}(R)$ to itself (strictly, we should then write $\Gamma(U, \widetilde{\cdot})\lceil_R$ in the latter case, but we shall often

omit the '$\lceil_R$' in the interests of notational simplicity), so that $\nu_{\mathfrak{a}}$ can also be interpreted as a natural equivalence of functors from $\mathscr{C}(R)$ to itself.

(ii) The above interpretation can be refined in the case of the Graded Deligne Isomorphism Theorem 20.2.7, for which we assume, in addition, that R is graded and that S consists entirely of homogeneous elements. Then, in view of 20.2.4, the sheaf $\widetilde{R}$ becomes a sheaf of graded R-algebras, and the functor $\widetilde{\cdot} : \mathscr{C}(R) \longrightarrow \mathscr{S}(\widetilde{R})$ of 20.3.1(iv) restricts to a functor from $^*\mathscr{C}(R)$ to the category $^*\mathscr{S}(\widetilde{R})$ of sheaves of graded $\widetilde{R}$-modules. We shall again denote this functor by $\widetilde{\cdot}$, as we do not expect this to cause confusion. It follows from 20.2.8 that $\Gamma(U, \widetilde{\cdot})$, considered as a functor from $\mathscr{C}(R)$ to either $\mathscr{C}(R)$ or $\mathscr{C}(\widetilde{R}(U))$, has the *restriction property, and that, also in the two cases, the natural equivalence $\nu_{\mathfrak{a}} : \Gamma(U, \widetilde{\cdot}) \xrightarrow{\cong} D_{\mathfrak{a}}$ of part (i) has the *restriction property.

A special case of 20.3.3(i) yields the 'classical' form of Deligne's Isomorphism.

20.3.4 Example: Deligne's Isomorphism for Affine Schemes. Take $S = R$ and $T := \operatorname{Spec}(R)$ (which is essential with respect to S by 20.1.3(i)). Then the induced sheaf $\widetilde{R}$ of 20.3.1(i) is just the *structure sheaf $\mathscr{O}_T$ of the affine scheme* $(T, \mathscr{O}_T)$ defined by R (see [22, Chapter II, §2, p. 70]). Moreover, if M is an R-module, then the induced sheaf $\widetilde{M}$ of 20.3.1(ii) is just the *sheaf of $\mathscr{O}_T$-modules associated to M* (see [22, Chapter II, §5, p. 110]). It follows from [22, Chapter II, §5, p. 111, and Proposition 5.4, p. 113] that the induced sheaves in the sense of 20.3.1(ii) are, up to isomorphism, precisely the quasi-coherent sheaves of $\mathscr{O}_T$-modules, and that the sheaves which are induced by finitely generated R-modules are, up to isomorphism, precisely the coherent sheaves of $\mathscr{O}_T$-modules.

Any ideal $\mathfrak{b}$ of R automatically belongs to $\mathfrak{A}_S$ in this case. Let $U := T \setminus \operatorname{Var}(\mathfrak{b}) = \operatorname{Spec}(R) \setminus \operatorname{Var}(\mathfrak{b})$. In this special case, the isomorphism $\nu_{\mathfrak{b},M} : \Gamma(U, \widetilde{M}) \xrightarrow{\cong} D_{\mathfrak{b}}(M)$ of 20.1.14 and 20.3.3(i) is just the classical isomorphism of Deligne (see [22, Chapter III, Exercise 3.7, p. 217]).

20.3.5 ♯Exercise. Let $(T, \mathscr{O}_T)$ be the affine scheme defined by R, and let qcoh_T denote the category of all quasi-coherent sheaves of $\mathscr{O}_T$-modules. Let M be an R-module. Use Exercise 20.1.18 to show that $\varepsilon_M^T : M \longrightarrow \Gamma(T, \widetilde{M})$ is an isomorphism, and deduce that the functor $\widetilde{\cdot} : \mathscr{C}(R) \longrightarrow \operatorname{qcoh}_T$ is an equivalence of categories. (See [22, Chapter II, Corollary 5.5, p. 113].)

20.3.6 ♯Exercise. (The standard hypotheses of 20.1.2 apply.) Let $\mathfrak{b}$ be a second ideal of $\mathfrak{A}_S$. Set $U := T \setminus \operatorname{Var}(\mathfrak{a})$ and $Z := T \cap \operatorname{Var}(\mathfrak{b})$. Set

$$\Gamma_Z(U, \widetilde{M}) := \{\gamma \in \Gamma(U, \widetilde{M}) : \rho_{U,\mathfrak{p},M}(\gamma) = 0 \text{ for all } \mathfrak{p} \in U \setminus Z\}.$$

(See [22, Chapter II, Exercise 1.14, p. 67, and Exercise 1.20, p. 68].) Note that $\Gamma_Z(U, \widetilde{\cdot})$ is a functor from $\mathscr{C}(R)$ to $\mathscr{C}(R)$, and is also a functor from $\mathscr{C}(R)$ to $\mathscr{C}(\widetilde{R}(U))$.

Use Lemma 20.1.10 to show that the restriction of the isomorphism $\nu_{\mathfrak{a},M} : \Gamma(U, \widetilde{M}) \xrightarrow{\cong} D_{\mathfrak{a}}(M)$ of 20.1.14 and 20.3.3(i) provides an isomorphism $\nu_{\mathfrak{a},\mathfrak{b},M} : \Gamma_Z(U, \widetilde{M}) \xrightarrow{\cong} \Gamma_{\mathfrak{b}}(D_{\mathfrak{a}}(M))$, and deduce that the functors $\Gamma_Z(U, \widetilde{\cdot})$ and $\Gamma_{\mathfrak{b}}(D_{\mathfrak{a}}(\cdot))$, whether considered as functors from $\mathscr{C}(R)$ to itself or from $\mathscr{C}(R)$ to $\mathscr{C}(\widetilde{R}(U))$, are naturally equivalent.

20.3.7 Example. Let $(T, \mathscr{O}_T)$ be the affine scheme defined by R. (See 20.3.4: we interpret S as R here, so that R as well as $\mathfrak{a}$ belongs to $\mathfrak{A}_S$.) Set $Z := \mathrm{Var}(\mathfrak{a})$ and $U := T \setminus \mathrm{Var}(\mathfrak{a}) = \mathrm{Spec}(R) \setminus Z$. If we apply 20.3.6 to the open set T and the closed set Z, we obtain an isomorphism $\nu_{R,\mathfrak{a},M} : \Gamma_Z(T, \widetilde{M}) \xrightarrow{\cong} \Gamma_{\mathfrak{a}}(D_R(M))$; moreover, the diagram

$$\begin{tikzcd}
0 \arrow[r] & \Gamma_Z(T, \widetilde{M}) \arrow[r] \arrow[d, "\mu_{\mathfrak{a},M}"', "\cong"] & \Gamma(T, \widetilde{M}) \arrow[r, "\rho_{TU}"] \arrow[d, "(\varepsilon_M^T)^{-1}"', "\cong"] & \Gamma(U, \widetilde{M}) \arrow[d, "\nu_{\mathfrak{a},M}"', "\cong"] & & \\
0 \arrow[r] & \Gamma_{\mathfrak{a}}(M) \arrow[r] & M \arrow[r, "\eta_{\mathfrak{a},M}"] & D_{\mathfrak{a}}(M) \arrow[r] & H^1_{\mathfrak{a}}(M) \arrow[r] & 0,
\end{tikzcd}$$

in which the second map in the top row is the inclusion map, $\mu_{\mathfrak{a},M} = \Gamma_{\mathfrak{a}}((\eta_{R,M})^{-1}) \circ \nu_{R,\mathfrak{a},M}$, and the lower row comes from 2.2.4(i)(c), has exact rows and commutes.

20.3.8 Exercise. Let $(T, \mathscr{O}_T)$ be the affine scheme defined by R, let Z be a closed subset of $T = \mathrm{Spec}(R)$, and let $U := \mathrm{Spec}(R) \setminus Z$. Let $\mathscr{F}$ be a coherent sheaf of $\mathscr{O}_T$-modules (see Example 20.3.4). Show that the restriction map $\rho_{TU} : \Gamma(T, \mathscr{F}) \longrightarrow \Gamma(U, \mathscr{F})$ associated with the sheaf $\mathscr{F}$ is injective if and only if, for all $\mathfrak{p} \in Z$, the stalk $\mathscr{F}_{\mathfrak{p}}$ of $\mathscr{F}$ at $\mathfrak{p}$ has positive depth. (Remember that the depth of a zero module over a local ring is interpreted as ∞.) Show further that ρ_{TU} is bijective if and only if $\operatorname{depth} \mathscr{F}_{\mathfrak{p}} > 1$ for all $\mathfrak{p} \in Z$.

The following exercise and reminders are in preparation for an extension of the sheaf-theoretic version of Deligne's Isomorphism, as presented in 20.3.3, to higher cohomology. This work will lead to what we shall call the Deligne Correspondence.

20.3.9 ♯Exercise. (The standard hypotheses of 20.1.2 apply.)

(i) Let I be an injective R-module. Show that the S-sheaf induced by I is flasque, that is (see [22, Chapter II, Exercise 1.16, p. 67]), for every pair of open sets $U, V \in \mathscr{U}_T^{(S)}$ with $V \subseteq U$, the restriction map $\rho_{UV,I} : \Gamma(U, \widetilde{I}) \longrightarrow \Gamma(V, \widetilde{I})$ is surjective.

(ii) Now assume in addition that R is graded and that S consists entirely of homogeneous elements. Let J be a *injective graded R-module. Show that the S-sheaf induced by J is flasque.

(iii) Let R, S and J be as in part (ii), and let $t \in \mathbb{Z}$. Thus $\widetilde{J}$ is a sheaf of graded $\widetilde{R}$-modules. Now $(\widetilde{R})_0$ is a sheaf of R_0-algebras and the t-th homogeneous component $(\widetilde{J})_t$ of this sheaf carries a natural structure as a sheaf of $(\widetilde{R})_0$-modules: show that $(\widetilde{J})_t$ is flasque.

20.3.10 Reminders. (The hypotheses of 20.1.2 apply.) Set $U := T \setminus \mathrm{Var}(\mathfrak{a})$. Recall [22, Chapter II, Exercise 1.8, p. 66] that the section functor $\Gamma(U, \cdot)$ (from the category of sheaves of Abelian groups on T to the category $\mathscr{C}(\mathbb{Z})$ of Abelian groups) is left exact: for each $i \in \mathbb{N}_0$, the i-th right derived functor of $\Gamma(U, \cdot)$ is denoted by $H^i(U, \cdot)$ and is referred to as the *i-th sheaf cohomology functor on U*. See [22, Chapter III, §2, p. 207]. Thus $H^i(U, \cdot)$ is again a functor from the category of sheaves of Abelian groups on T to $\mathscr{C}(\mathbb{Z})$; however, if $\mathscr{F}$ is a sheaf of $\widetilde{R}$-modules on T, then, for all $i \in \mathbb{N}_0$, the Abelian group $H^i(U, \mathscr{F})$ carries a natural structure as $\widetilde{R}(U)$-module which is such that, for all $\lambda \in \widetilde{R}(U)$ and all $\sigma \in H^i(U, \mathscr{F})$, we have $\lambda\sigma = H^i(U, \lambda\,\mathrm{Id}_{\mathscr{F}})(\sigma)$. It then follows that $\big(H^i(U, \cdot)\big)_{i \in \mathbb{N}_0}$ is a negative strongly connected sequence of covariant functors from $\mathscr{S}(\widetilde{R})$ to $\mathscr{C}(\widetilde{R}(U))$.

We noted in 20.3.1(v) that the functor $\widetilde{\cdot} : \mathscr{C}(R) \longrightarrow \mathscr{S}(\widetilde{R})$ of 20.3.1(iv) is exact. If we follow this with the above sheaf cohomology functors, we find that $\big(H^i(U, \widetilde{\cdot})\big)_{i \in \mathbb{N}_0}$ is a negative strongly connected sequence of covariant functors from $\mathscr{C}(R)$ to $\mathscr{C}(\widetilde{R}(U))$. Of course, for an R-module M, we can regard the $\widetilde{R}(U)$-module $H^i(U, \widetilde{M})$ as an R-module by restriction of scalars: this device leads to a negative strongly connected sequence of covariant functors $\big(H^i(U, \widetilde{\cdot})\lceil_R\big)_{i \in \mathbb{N}_0}$ from $\mathscr{C}(R)$ to itself (although we shall normally drop the '$\lceil_R$' from the notation).

We are now ready to present the promised Deligne Correspondence. This correspondence presents a fundamental connection between sheaf cohomology and local cohomology.

20.3.11 The Deligne Correspondence Theorem. *(The standard hypotheses of* 20.1.2 *apply.) Set* $U := T \setminus \mathrm{Var}(\mathfrak{a})$.

There is a unique isomorphism

$$\Theta = \left(\theta^i\right)_{i\in\mathbb{N}_0} : \left(H^i(U,\widetilde{\cdot})\right)_{i\in\mathbb{N}_0} \xrightarrow{\cong} \left(\mathscr{R}^i D_{\mathfrak{a}}\right)_{i\in\mathbb{N}_0}$$

of negative strongly connected sequences of covariant functors from $\mathscr{C}(R)$ to itself for which θ^0 is the natural equivalence $\nu_{\mathfrak{a}} : \Gamma(U,\widetilde{\cdot}) \xrightarrow{\cong} D_{\mathfrak{a}}$ of 20.3.3(i).

Consequently, by 2.2.4(iii), *for each $i \in \mathbb{N}$, the functors $H^i(U,\widetilde{\cdot})$ and $H^{i+1}_{\mathfrak{a}}$ from $\mathscr{C}(R)$ to itself are naturally equivalent.*

Proof. Let I be an injective R-module. Of course, $\mathscr{R}^i D_{\mathfrak{a}}(I) = 0$ for all $i \in \mathbb{N}$. By 20.3.9(i), the induced S-sheaf $\widetilde{I}$ is flasque, so that $H^i(U,\widetilde{I}) = 0$ for all $i \in \mathbb{N}$, by [22, Chapter III, Proposition 2.5, p. 208]. The claim is therefore immediate from 1.3.4(ii). □

20.3.12 Remark. In the situation of 20.3.11, we can, in view of 20.1.17, consider $D_{\mathfrak{a}}$ as a functor from $\mathscr{C}(R)$ to $\mathscr{C}(\widetilde{R}(U))$, so that $\left(\mathscr{R}^i D_{\mathfrak{a}}\right)_{i\in\mathbb{N}_0}$ is actually a negative strongly connected sequence of covariant functors from $\mathscr{C}(R)$ to $\mathscr{C}(\widetilde{R}(U))$; furthermore, $\nu_{\mathfrak{a}} : \Gamma(U,\widetilde{\cdot}) \xrightarrow{\cong} D_{\mathfrak{a}}$ is actually a natural equivalence of functors from $\mathscr{C}(R)$ to $\mathscr{C}(\widetilde{R}(U))$ (see 20.3.3(i)).

One can therefore argue as in the above proof of 20.3.11 to see that there is a unique isomorphism $\left(\delta^i\right)_{i\in\mathbb{N}_0} : \left(H^i(U,\widetilde{\cdot})\right)_{i\in\mathbb{N}_0} \xrightarrow{\cong} \left(\mathscr{R}^i D_{\mathfrak{a}}\right)_{i\in\mathbb{N}_0}$ of negative strongly connected sequences of covariant functors from $\mathscr{C}(R)$ to $\mathscr{C}(\widetilde{R}(U))$ for which δ^0 is $\nu_{\mathfrak{a}}$; moreover, the uniqueness aspect of Theorem 20.3.11 shows that $\delta^i\lceil_R = \theta^i$ for all $i \in \mathbb{N}_0$, so that, for each such i and each R-module N, the maps δ^i_N and θ^i_N coincide and θ^i_N is an $\widetilde{R}(U)$-isomorphism.

20.3.13 A Graded Version of the Deligne Correspondence. Here, we present refinements of 20.3.11 which are available in the graded case, and so we assume, in addition to the hypotheses of 20.3.11, that R is graded and that S consists entirely of homogeneous elements. In particular, this means that $\mathfrak{a}$ is graded. We consider the isomorphism

$$\Theta = \left(\theta^i\right)_{i\in\mathbb{N}_0} : \left(H^i(U,\widetilde{\cdot})\right)_{i\in\mathbb{N}_0} \xrightarrow{\cong} \left(\mathscr{R}^i D_{\mathfrak{a}}\right)_{i\in\mathbb{N}_0}$$

of negative strongly connected sequences of covariant functors from $\mathscr{C}(R)$ to $\mathscr{C}(\widetilde{R}(U))$ of 20.3.11 and 20.3.12: recall that θ^0 is the natural equivalence $\nu_{\mathfrak{a}} : \Gamma(U,\widetilde{\cdot}) \xrightarrow{\cong} D_{\mathfrak{a}}$ of 20.3.3(i), which, by 20.3.3(ii), has the *restriction property.

(i) Whenever I is a *injective graded R-module, we have

$$H^i(U,\widetilde{I}) \cong \mathscr{R}^i D_{\mathfrak{a}}(I) \cong H^{i-1}_{\mathfrak{a}}(I) = 0,$$

by 20.3.11, 2.2.4(iii) and 12.1.3. Since $\Gamma(U, \widetilde{\cdot})$ has the *restriction property (see 20.2.8(i)), we can use Theorem 12.3.1 to deduce that there is exactly one choice of gradings on the $\widetilde{R}(U)$-modules $H^i(U, \widetilde{N})$ ($i \in \mathbb{N}$, N a graded R-module) with respect to which $\left(H^i(U, \widetilde{\cdot})\right)_{i \in \mathbb{N}_0}$ has the *restriction property of 12.2.5. We shall refer to these gradings as the *natural gradings*, and any unexplained gradings on these modules are to be interpreted as these natural ones. Notice that they provide gradings over R, and so must be the unique choice of gradings with respect to which $\left(H^i(U, \widetilde{\cdot})\right)_{i \in \mathbb{N}_0}$, considered as a negative strongly connected sequence of functors from $\mathscr{C}(R)$ to itself, has the *restriction property.

(ii) Similarly, $D_{\mathfrak{a}} : \mathscr{C}(R) \longrightarrow \mathscr{C}(\widetilde{R}(U))$ has the *restriction property (see 20.2.8(iii)), and there is exactly one choice of gradings on the $\widetilde{R}(U)$-modules $\mathscr{R}^i D_{\mathfrak{a}}(N)$ ($i \in \mathbb{N}$, N a graded R-module) with respect to which $\left(\mathscr{R}^i D_{\mathfrak{a}}\right)_{i \in \mathbb{N}_0}$ has the *restriction property. We again refer to these gradings as the *natural gradings*; the uniqueness aspect of Theorem 12.3.1 means that these natural gradings, which work over both $\widetilde{R}(U)$ and R, must be the ones found in Exercise 12.4.5(ii).

Now θ^0 has the *restriction property. We can define gradings on the $\mathscr{R}^i D_{\mathfrak{a}}(N)$ ($i \in \mathbb{N}$, N a graded R-module) in such a way that all the θ^i_N ($i \in \mathbb{N}$, N a graded R-module) are homogeneous. Since Θ is an isomorphism of connected sequences, it follows that, with respect to *these* gradings, $\left(\mathscr{R}^i D_{\mathfrak{a}}\right)_{i \in \mathbb{N}_0}$ has the *restriction property, and so these gradings must be the natural gradings.

Thus, with respect to the natural gradings, for all $i \in \mathbb{N}_0$, the natural equivalence $\theta^i : H^i(U, \widetilde{\cdot}) \xrightarrow{\cong} \mathscr{R}^i D_{\mathfrak{a}}$ of 20.3.11 has the *restriction property.

(iii) Finally, since, by 12.4.5(iii), the natural equivalence $\mathscr{R}^i D_{\mathfrak{a}} \xrightarrow{\cong} H^{i+1}_{\mathfrak{a}}$ of 2.2.4(ii) has the *restriction property, it follows that the natural equivalence $H^i(U, \widetilde{\cdot}) \xrightarrow{\cong} H^{i+1}_{\mathfrak{a}}$ of the final paragraph of 20.3.11 also has the *restriction property. This gives a satisfactory extension, to the graded case, of our fundamental connection between sheaf cohomology and local cohomology.

Next, we are going to study the cohomology of homogeneous components of induced S-sheaves in the graded situation. This theme has great importance in the study of sheaf cohomology over projective varieties and, more generally, over projective schemes. Our aim is to produce a link between cohomology of homogeneous components of induced S-sheaves and homogeneous components of graded ideal transforms and local cohomology modules. We begin with some preparations.

20.3.14 Remarks and Notation. Here, the hypotheses of 20.2.1 apply. Let $t \in \mathbb{Z}$, and set $U := T \setminus \mathrm{Var}(\mathfrak{a})$.

(i) In 20.3.3(ii), we noted that $\widetilde{R}$ is a sheaf of graded R-algebras, and we introduced the functor $\widetilde{\cdot}$ from $^*\mathscr{C}(R)$ to the category $^*\mathscr{S}(\widetilde{R})$ of sheaves of graded $\widetilde{R}$-modules; this functor is exact, by 20.3.1(v).

We shall use $(\,\cdot\,)_t : {}^*\mathscr{S}(\widetilde{R}) \longrightarrow \mathscr{S}((\widetilde{R})_0)$ to denote the functor which associates to each sheaf $\mathscr{F}$ of graded $\widetilde{R}$-modules its t-th component $\mathscr{F}_t$, which is a sheaf of $(\widetilde{R})_0$-modules.

It is a consequence of Exercise 20.2.6 that the functors $(\widetilde{\cdot})_t$ and $(\widetilde{\cdot(t)})_0$ (from $^*\mathscr{C}(R)$ to $\mathscr{S}((\widetilde{R})_0)$) are equal. (Here, $(\,\cdot\,)(t) : {}^*\mathscr{C}(R) \longrightarrow {}^*\mathscr{C}(R)$ denotes the t-th shift functor.)

(ii) It follows from the final paragraph of part (i) that, in $\mathscr{C}((\widetilde{R}(U))_0)$, we have $\Gamma(U, (\widetilde{M(t)})_0) = \Gamma(U, (\widetilde{M})_t) = \Gamma(U, \widetilde{M})_t$. The natural equivalence $\nu_{\mathfrak{a}} : \Gamma(U, \widetilde{\cdot}) \xrightarrow{\cong} D_{\mathfrak{a}}$ of 20.3.3 has, by 20.3.3(ii), the *restriction property. Hence, on taking t-th components, we see that $\nu_{\mathfrak{a},t} : \Gamma(U, \widetilde{\cdot})_t \xrightarrow{\cong} D_{\mathfrak{a}}(\,\cdot\,)_t$ is a natural equivalence of functors from $^*\mathscr{C}(R)$ to $\mathscr{C}((\widetilde{R}(U))_0)$, and also of functors from $^*\mathscr{C}(R)$ to $\mathscr{C}(R_0)$.

(iii) Since the functor $(\widetilde{\cdot(t)})_0$ from $^*\mathscr{C}(R)$ to $\mathscr{S}((\widetilde{R})_0)$ is exact, it follows that $\left(H^i(U, (\widetilde{\cdot(t)})_0)\right)_{i\in\mathbb{N}_0}$ can be considered as a negative strongly connected sequence of covariant functors from $^*\mathscr{C}(R)$ to either $\mathscr{C}((\widetilde{R}(U))_0)$ or $\mathscr{C}(R_0)$. We propose, in the Serre-Grothendieck Correspondence Theorem 20.3.15 below, to compare this connected sequence with $\left(\mathscr{R}^i D_{\mathfrak{a}}(\,\cdot\,)_t\right)_{i\in\mathbb{N}_0}$, which also can be considered as a negative strongly connected sequence of covariant functors from $^*\mathscr{C}(R)$ to either $\mathscr{C}((\widetilde{R}(U))_0)$ or $\mathscr{C}(R_0)$.

20.3.15 The Serre-Grothendieck Correspondence Theorem. *We adopt the hypotheses of* 20.2.1 *here. Let* $t \in \mathbb{Z}$, *and set* $U := T \setminus \mathrm{Var}(\mathfrak{a})$.

There is a unique isomorphism

$$\Omega_t = \left(\omega_t^i\right)_{i\in\mathbb{N}_0} : \left(H^i(U, (\widetilde{\cdot(t)})_0)\right)_{i\in\mathbb{N}_0} \xrightarrow{\cong} \left(\mathscr{R}^i D_{\mathfrak{a}}(\,\cdot\,)_t\right)_{i\in\mathbb{N}_0}$$

of negative strongly connected sequences of covariant functors from $^*\mathscr{C}(R)$ *to* $\mathscr{C}((\widetilde{R}(U))_0)$ *for which* ω_t^0 *is the natural equivalence* $\nu_{\mathfrak{a},t} : \Gamma(U, (\widetilde{\cdot(t)})_0) \xrightarrow{\cong} D_{\mathfrak{a}}(\,\cdot\,)_t$ *of functors of* 20.3.14(ii).

Proof. Let I be a *injective graded R-module. Let $i \in \mathbb{N}$. Then $\mathscr{R}^i D_{\mathfrak{a}}(I) \cong H_{\mathfrak{a}}^{i+1}(I) = 0$, by 2.2.4(ii) and 12.1.3. Also, by 20.3.14(i), we have $(\widetilde{I(t)})_0 = (\widetilde{I})_t$, and, by 20.3.9(iii), this is a flasque sheaf of $(\widetilde{R})_0$-modules. Therefore $H^i(U, (\widetilde{I(t)})_0) = 0$ by [22, Chapter III, Proposition 2.5, p. 208].

If we now endow $(\widetilde{R}(U))_0$ with the trivial grading, we can use 12.1.7(ii) to complete the proof. □

20.3.16 Remarks. Here we consider further the situation of the Serre-Grothendieck Correspondence in 20.3.15, and we use the notation of that result.

(i) Observe that Ω_t can be regarded as an isomorphism of negative strongly connected sequences of covariant functors from $^*\mathscr{C}(R)$ to $\mathscr{C}(R_0)$.

(ii) Let $d \in \mathbb{Z}$ and $r_d \in R_d$. For each graded R-module N, let $\mu_{r_d} = \mu_{r_d,N} : N \longrightarrow N(d)$ be the homogeneous R-homomorphism given by multiplication by r_d. Set $u = t + d$. It is straightforward to check that

$$\left(H^i(U, (\widetilde{\mu_{r_d}(t)})_0)\right)_{i\in\mathbb{N}_0} : \left(H^i(U, (\widetilde{\cdot(t)})_0)\right)_{i\in\mathbb{N}_0} \longrightarrow \left(H^i(U, (\widetilde{\cdot(u)})_0)\right)_{i\in\mathbb{N}_0}$$

is a homomorphism of connected sequences of functors from $^*\mathscr{C}(R)$ to $\mathscr{C}(R_0)$.

(iii) Let $i \in \mathbb{N}_0$. It is straightforward to check that $\bigoplus_{j\in\mathbb{Z}} H^i(U, (\widetilde{M(j)})_0)$ has a structure as graded R-module such that $r_d z_t = H^i(U, (\widetilde{\mu_{r_d}(t)})_0) z_t$ for ($d \in \mathbb{Z}$ and) $r_d \in R_d$ and $z_t \in H^i(U, (\widetilde{M(t)})_0)$. It is also straightforward to use the uniqueness aspect of 12.1.7(i) to show that, with respect to this graded R-module structure, the R_0-isomorphism

$$\bigoplus_{j\in\mathbb{Z}} \omega^i_{j,M} : \bigoplus_{j\in\mathbb{Z}} H^i(U, (\widetilde{M(j)})_0) \xrightarrow{\cong} \bigoplus_{j\in\mathbb{Z}} \mathscr{R}^i D_{\mathfrak{a}}(M)_j = \mathscr{R}^i D_{\mathfrak{a}}(M)$$

given by the Serre-Grothendieck Correspondence 20.3.15 (and part (i)) is actually a homogeneous isomorphism of graded R-modules. For $i = 0$, this is just the homogeneous R-isomorphism

$$\bigoplus_{j\in\mathbb{Z}} \omega^0_{j,M} = \nu_{\mathfrak{a},M} : \bigoplus_{j\in\mathbb{Z}} \Gamma(U, (\widetilde{M(j)})_0) = \widetilde{M}(U) \xrightarrow{\cong} \bigoplus_{j\in\mathbb{Z}} D_{\mathfrak{a}}(M)_j = D_{\mathfrak{a}}(M)$$

of 20.3.3.

(iv) Let $i \in \mathbb{N}$. It follows from part (iii) and 12.4.5(iii) that there is a homogeneous isomorphism $\bigoplus_{j\in\mathbb{Z}} H^i(U, (\widetilde{M(j)})_0) \xrightarrow{\cong} H^{i+1}_{\mathfrak{a}}(M)$ of graded R-modules.

20.3.17 ♯Exercise. Here the hypotheses of 20.1.2 apply. Let $\mathfrak{p} \in T$ and $t \in \mathbb{Z}$.

(i) Show that the isomorphism of R-algebras $\psi^{\mathfrak{p}}_R : \widetilde{R}_{\mathfrak{p}} \longrightarrow (S \setminus \mathfrak{p})^{-1}R$ of 20.3.1(v) is homogeneous, and that the natural equivalence

$$\psi^{\mathfrak{p}} : \widetilde{\cdot}_{\mathfrak{p}} \longrightarrow (S \setminus \mathfrak{p})^{-1}$$

of functors from $\mathscr{C}(R)$ to itself (again of 20.3.1(v)) has the *restriction property.

(ii) Show that the stalk $((\widetilde{R})_0)_{\mathfrak{p}}$ at $\mathfrak{p}$ of the sheaf $(\widetilde{R})_0$ of R_0-algebras is isomorphic as an R_0-algebra to $((S \setminus \mathfrak{p})^{-1}R)_0$, the 0-th homogeneous component of $(S \setminus \mathfrak{p})^{-1}R$, and that when this isomorphism is used to consider $((\widetilde{M(t)})_0)_{\mathfrak{p}}$

as an $((S \setminus \mathfrak{p})^{-1}R)_0$-module, then that module is $((S \setminus \mathfrak{p})^{-1}R)_0$-isomorphic to $((S \setminus \mathfrak{p})^{-1}M)_t$.

20.4 Applications to projective schemes

The Serre-Grothendieck Correspondence 20.3.15, as exploited in 20.3.16, can be used in a very effective manner, in various situations, to derive results about the cohomology of induced sheaves from purely algebraic results obtained earlier in the book. We have neither the space nor the intention to present a comprehensive approach to sheaf cohomology in this book, and so we shall content ourselves, in this final section, with some applications of the Serre-Grothendieck Correspondence to the particular case of projective schemes induced by homogeneous, positively graded (Noetherian) rings. This situation is particularly fertile in this context because the quasi-coherent sheaves are, up to isomorphism, just the sheaves induced by graded modules.

We hope that the illustrations which we present in this section will convince the reader of the value of the Serre-Grothendieck Correspondence, and will whet her or his appetite for exploration of applications of the correspondence in other situations.

20.4.1 Hypotheses for the Section. Throughout this section, we shall assume that $R = \bigoplus_{n \in \mathbb{N}_0} R_n$ is positively graded and homogeneous; we shall take $S := \bigcup_{n \in \mathbb{N}} R_n$, the set of homogeneous elements of R of positive degrees (so that $\mathfrak{A}_S$ is the set of all graded ideals of R which are contained in R_+ (see 20.1.4)); we shall take $T := \mathrm{Proj}(R) = {}^*\mathrm{Spec}(R) \setminus \mathrm{Var}(R_+)$; and we shall assume that the R-module M is graded.

Recall from 20.1.4 that the S-topology on $\mathrm{Proj}(R)$ is the Zariski topology. Note that, for $\mathfrak{p} \in \mathrm{Proj}(R)$, the natural ring homomorphism

$$(S \setminus \mathfrak{p})^{-1}R \longrightarrow R_{(\mathfrak{p})}$$

is an isomorphism.

20.4.2 Remarks. (The hypotheses of 20.4.1 apply.)

(i) The sheaf $(\widetilde{R})_0$ of R_0-algebras of 20.3.9(iii) is just the structure sheaf $\mathcal{O}_T$ of the *projective scheme* $(T, \mathcal{O}_T)$ defined by R: see [22, Chapter II, §2, p. 76]. Note that, for each open subset U of T, we have $\mathcal{O}_T(U) = (\widetilde{R}(U))_0$, and, for $\mathfrak{p} \in T$, the stalk of $\mathcal{O}_T$ at $\mathfrak{p}$ is, by 20.3.17, isomorphic to $((S \setminus \mathfrak{p})^{-1}R)_0$.

(ii) Let M be a graded R-module. The sheaf $(\widetilde{M})_0$ of $(\widetilde{R})_0$-modules of 20.3.14(i) is just the *sheaf* of $\mathcal{O}_T$-modules *associated to* M *on* $\mathrm{Proj}(R)$, as defined by Hartshorne in [22, Chapter II, §5, p. 116]. Although Hartshorne's

notation for this sheaf is commonly used, we shall continue to use the notation $(\widetilde{M})_0$, in an attempt to avoid confusing readers.

20.4.3 ♯Exercise. Show that, in the situation of 20.4.2(i), for $\mathfrak{p} \in T$, the stalk of $\mathcal{O}_T$ at $\mathfrak{p}$ is isomorphic to $(R_{(\mathfrak{p})})_0$, the 0-th component of the homogeneous localization $R_{(\mathfrak{p})}$ of R at $\mathfrak{p}$. (The reader should note that our use of the notation $R_{(\mathfrak{p})}$ is different from Hartshorne's.)

Show also that, for $t \in \mathbb{Z}$, in the situation of 20.4.2(ii), for $\mathfrak{p} \in T$, the stalk of $(\widetilde{M(t)})_0$ at $\mathfrak{p}$ is $(R_{(\mathfrak{p})})_0$-isomorphic to $(M_{(\mathfrak{p})})_t$, the t-th component of the homogeneous localization $M_{(\mathfrak{p})}$ of M at $\mathfrak{p}$.

20.4.4 The classical form of the Serre-Grothendieck Correspondence. *(The hypotheses of* 20.4.1 *apply.) Suppose that the graded R-module M is finitely generated. It follows from the Serre-Grothendieck Correspondence* 20.3.15 *and* 20.3.16 *(with* $\mathfrak{a} = R_+$*) that there are homogeneous R-isomorphisms*

$$\bigoplus_{j\in\mathbb{Z}} H^i(T, (\widetilde{M(j)})_0) \xrightarrow{\cong} \mathscr{R}^i D_{R_+}(M) \xrightarrow{\cong} H^{i+1}_{R_+}(M) \qquad \textit{for all } i \in \mathbb{N}$$

and

$$\bigoplus_{j\in\mathbb{Z}} \Gamma(T, (\widetilde{M(j)})_0) = \bigoplus_{j\in\mathbb{Z}} \widetilde{M}(T)_j = \widetilde{M}(T) \xrightarrow{\cong} D_{R_+}(M). \ \square$$

We recall now some facts about sheaves over projective schemes which mean that the classical form of the Serre-Grothendieck Correspondence 20.4.4 is a powerful tool for translation of algebraic results about local cohomology into geometric results about sheaf cohomology.

20.4.5 Reminders. (The hypotheses of 20.4.1 apply.) Let $t \in \mathbb{Z}$.

(i) By [22, Chapter II, Proposition 5.11(c), p. 116], the sheaf $(\widetilde{M})_0$ is a quasi-coherent sheaf of $\mathcal{O}_T$-modules; furthermore, if M is finitely generated, then $(\widetilde{M})_0$ is a coherent sheaf of $\mathcal{O}_T$-modules.

(ii) The twisted sheaf $(\widetilde{M})_0(t)$, as defined by Hartshorne [22, Chapter II, §5, p. 117] is naturally isomorphic (as a sheaf of $\mathcal{O}_T$-modules) to $(\widetilde{M(t)})_0$, the sheaf associated to the shifted module $M(t)$: see Hartshorne [22, Chapter II, Proposition 5.12(b), p. 117].

(iii) Let $\mathscr{F}$ be a sheaf of $\mathcal{O}_T$-modules. Recall from [22, Chapter II, §5, p. 118] that $\Gamma_*(\mathscr{F}) := \bigoplus_{j\in\mathbb{Z}} \Gamma(T, \mathscr{F}(j))$ carries a natural structure as a graded R-module and is called the *graded R-module associated to* $\mathscr{F}$.

(iv) Let $\mathscr{F}$ be a quasi-coherent sheaf of $\mathcal{O}_T$-modules. Then, by [22, Chapter

II, Proposition 5.15, p. 119], there is a natural isomorphism

$$\left(\widetilde{\Gamma_*(\mathscr{F})}\right)_0 \xrightarrow{\cong} \mathscr{F}$$

of sheaves of $\mathscr{O}_T$-modules. This shows, in particular, that each quasi-coherent sheaf $\mathscr{F}$ of $\mathscr{O}_T$-modules is isomorphic to $(\widetilde{N})_0$ for some graded R-module N. Furthermore, in this situation, the induced R_0-isomorphism

$$\Gamma_*(T,\mathscr{F}) := \bigoplus_{j\in\mathbb{Z}} \Gamma(T,\mathscr{F}(j)) \cong \bigoplus_{j\in\mathbb{Z}} \Gamma(T,(\widetilde{N(j)})_0)$$

(which arises by virtue of part (ii) above) is a homogeneous R-isomorphism. This is easily seen by comparing, by means of the natural isomorphism of part (ii), the action of a homogeneous element $r_d \in R_d$ (where $d \in \mathbb{N}_0$) on $\Gamma_*(T,\mathscr{F})$ as described in [22, Chapter II, §5, p. 118] with the action of r_d on $\bigoplus_{j\in\mathbb{Z}} \Gamma(T,(\widetilde{N(j)})_0)$ as described in 20.3.16(iii).

(v) One can use [22, Chapter II, Theorem 5.17, p. 121] to see that each coherent sheaf of $\mathscr{O}_T$-modules is isomorphic to $(\widetilde{N})_0$ for some finitely generated graded R-module N.

We can now prove the fundamental Finiteness Theorem of Serre concerning the cohomology of coherent sheaves over projective schemes.

20.4.6 Serre's Finiteness Theorem. (See [56, §66, Théorème 1 and Théorème 2(b)] and [22, Chapter III, Theorem 5.2, p. 228].) *(The hypotheses of* 20.4.1 *apply.) Let $\mathscr{F}$ be a coherent sheaf of $\mathscr{O}_T$-modules. Then*

(i) *$H^i(T,\mathscr{F}(j))$ is a finitely generated R_0-module, for all $i \in \mathbb{N}_0$ and all $j \in \mathbb{Z}$; and*

(ii) *there exists $r \in \mathbb{Z}$ such that $H^i(T,\mathscr{F}(j)) = 0$ for all $i \in \mathbb{N}$ and all $j \geq r$.*

Proof. By 20.4.5(v), there exists a finitely generated graded R-module N such that $\mathscr{F} \cong (\widetilde{N})_0$; furthermore, by 20.4.5(iv), there is a homogeneous isomorphism of graded R-modules $\Gamma_*(T,\mathscr{F}) \cong \bigoplus_{j\in\mathbb{Z}} \Gamma(T,(\widetilde{N(j)})_0)$. Also, by 20.4.5(ii), for each $i \in \mathbb{N}_0$ and $j \in \mathbb{Z}$, there is an isomorphism of R_0-modules $H^i(T,\mathscr{F}(j)) \cong H^i(T,(\widetilde{N(j)})_0)$.

Let $j \in \mathbb{Z}$ and $i \in \mathbb{N}$. We can now use the classical form of the Serre-Grothendieck Correspondence 20.4.4 to see that there are R_0-isomorphisms $\Gamma(T,\mathscr{F}(j)) \cong D_{R_-}(N)_j$ and $H^i(T,\mathscr{F}(j)) \cong H^{i+1}_{R_+}(N)_j$. Since $D_{R_+}(N)_j$ is a finitely generated R_0-module by 15.1.6(ii), and $H^{i+1}_{R_+}(N)_j$ is a finitely generated R_0-module by 15.1.5(i), part (i) is now proved. Part (ii) follows from 15.1.5(ii). □

20.4.7 Exercise. Consider the situation and use the notation of Serre's Finiteness Theorem 20.4.6. Show that, for all $r \in \mathbb{Z}$, the graded R-module

$$\Gamma_*(T, \mathscr{F})_{\geq r} := \bigoplus_{j \in \mathbb{Z},\, j \geq r} \Gamma(T, \mathscr{F}(j))$$

is finitely generated.

The philosophy of the above proof of Theorem 20.4.6 suggests that a similar approach to Castelnuovo regularity of coherent sheaves of $\mathcal{O}_T$-modules might be profitable. This is indeed the case.

20.4.8 Definition. (The hypotheses of 20.4.1 apply.) Let $\mathscr{F}$ be a coherent sheaf of $\mathcal{O}_T$-modules, and let $r \in \mathbb{Z}$.

We say that $\mathscr{F}$ is *r-regular in the sense of Castelnuovo-Mumford* if and only if $H^i(T, \mathscr{F}(s-i)) = 0$ for all $i \in \mathbb{N}$ and all $s \in \mathbb{Z}$ with $s \geq r$. In practice, the phrase 'in the sense of Castelnuovo-Mumford' is usually omitted.

We define the *(Castelnuovo-Mumford) regularity* $\operatorname{reg}(\mathscr{F})$ *of* $\mathscr{F}$ by

$$\operatorname{reg}(\mathscr{F}) = \inf\{r \in \mathbb{Z} : \mathscr{F} \text{ is } r\text{-regular}\}.$$

20.4.9 Remarks. In the situation, and with the notation, of 20.4.8, there exists a finitely generated graded R-module N such that $\mathscr{F} \cong (\widetilde{N})_0$, by 20.4.5(v). Furthermore, by 20.4.5 and the classical form of the Serre-Grothendieck Correspondence 20.4.4, for each $i \in \mathbb{N}$ and each $j \in \mathbb{Z}$, there is an R_0-isomorphism $H^i(T, \mathscr{F}(j)) \cong H^{i+1}_{R_+}(N)_j$; in particular,

$$H^i(T, \mathscr{F}(s-i)) \cong H^{i+1}_{R_+}(N)_{s+1-(i+1)} \qquad \text{for all } i \in \mathbb{N} \text{ and } s \in \mathbb{Z}.$$

This enables us to use results from Chapter 15 to make deductions about the regularity of coherent sheaves of $\mathcal{O}_T$-modules.

(i) By Theorem 15.2.5, if $H^i(T, \mathscr{F}(r-i)) = 0$ for all $i \in \mathbb{N}$, then $\mathscr{F}$ is r-regular.

(ii) In view of Definition 15.2.1(ii), we can say that $\mathscr{F}$ is r-regular if and only if N is r-regular at and above level 2.

(iii) Hence $\operatorname{reg}(\mathscr{F}) = \operatorname{reg}^2(N)$ (see Definition 15.2.9).

20.4.10 Definition and ♯Exercise. (The hypotheses of 20.4.1 apply.) Let $\mathscr{F}$ be a non-zero coherent sheaf of $\mathcal{O}_T$-modules. Recall that the *support of* $\mathscr{F}$, denoted by $\operatorname{Supp}(\mathscr{F})$, is the set $\{\mathfrak{p} \in T : \mathscr{F}_{\mathfrak{p}} \neq 0\}$ (see [22, Chapter II, Exercise 1.14, p. 67]); the *dimension of* $\mathscr{F}$, denoted by $\dim \mathscr{F}$, is defined to be the dimension of $\operatorname{Supp}(\mathscr{F})$ (see 19.1.8).

By 20.4.5(v), there exists a finitely generated graded R-module N such that $\mathscr{F} \cong (\widetilde{N})_0$. Show that

(i) $\mathrm{Supp}(\mathscr{F}) = \mathrm{Supp}(N) \cap \mathrm{Proj}(R)$ (a closed subset of $\mathrm{Proj}(R)$), and

(ii) when R_0 is Artinian, $\dim \mathscr{F} = \dim N - 1$ (so that $\dim \mathscr{F}$ is finite) (you might find 19.7.1(iii) helpful here).

20.4.11 Notation. (The hypotheses of 20.4.1 apply.) Assume that R_0 is Artinian and let $\mathscr{F}$ be a coherent sheaf of $\mathscr{O}_T$-modules.

By Serre's Finiteness Theorem 20.4.6, for each $i \in \mathbb{N}_0$ and $n \in \mathbb{Z}$, the R_0-module $H^i(T, \mathscr{F}(j))$ is finitely generated, and so has finite length: we denote this length by $h^i(T, \mathscr{F}(j))$.

20.4.12 Example: a priori bounds of diagonal type for the Castelnuovo regularity. (See [2].) (The hypotheses of 20.4.1 apply.) Let $d \in \mathbb{N}$; assume that R_0 is Artinian and let $\mathscr{F}$ be a non-zero coherent sheaf of $\mathscr{O}_T$-modules with $\dim \mathscr{F} \leq d$. We are going to use the $(d+1)$-th right bounding function $C^{(d+1)}$ of 16.2.1.

By 20.4.5(v), there exists a finitely generated graded R-module N such that $\mathscr{F} \cong (\widetilde{N})_0$; by 20.4.10, $\dim \mathscr{F} = \dim N - 1$, so that $\dim N \leq d + 1$. Therefore, by 20.4.9(iii) and 16.2.6,

$$\begin{aligned}
\mathrm{reg}(\mathscr{F}) &= \mathrm{reg}^2(N) = \mathrm{reg}^2(N(1)) + 1 \\
&\leq C^{(d+1)}(h^2_{N(1)}(-2), \ldots, h^{d+1}_{N(1)}(-d-1)) \\
&= C^{(d+1)}(h^2_N(-1), \ldots, h^{d+1}_N(-d)) \\
&= C^{(d+1)}(h^1(T, \mathscr{F}(-1)), \ldots, h^d(T, \mathscr{F}(-d))).
\end{aligned}$$

Hence $\mathrm{reg}(\mathscr{F}) \leq C^{(d+1)}(h^1(T, \mathscr{F}(-1)), \ldots, h^d(T, \mathscr{F}(-d)))$.

We show next how the Serre-Grothendieck Correspondence enables us to produce quickly, for a coherent sheaf $\mathscr{F}$ of $\mathscr{O}_T$-modules as in 20.4.11, a Hilbert polynomial of $\mathscr{F}$ and, for each $i \in \mathbb{N}_0$, an i-th cohomological Hilbert polynomial of $\mathscr{F}$ which play similar rôles to the corresponding polynomials in 17.1.7 and 17.1.9.

20.4.13 Theorem and Definitions. *(The hypotheses of* 20.4.1 *apply.) Assume that R_0 is Artinian and let $\mathscr{F}$ be a non-zero coherent sheaf of $\mathscr{O}_T$-modules. Set $d := \dim \mathscr{F}$.*

Now $h^i(T, \mathscr{F}) = 0$ for all $i >> 0$, and the Euler characteristic $\chi(\mathscr{F})$ of $\mathscr{F}$ *is defined by $\chi(\mathscr{F}) := \sum_{i \in \mathbb{N}_0} (-1)^i h^i(T, \mathscr{F})$ (see Hartshorne* [22, Chapter III, Exercise 5.1, p. 230]*).*

There is a (necessarily uniquely determined) polynomial $P_{\mathscr{F}} \in \mathbb{Q}[X]$ of degree

$d = \dim \mathscr{F}$ *such that* $P_{\mathscr{F}}(n) = \chi(\mathscr{F}(n))$ *for all* $n \in \mathbb{Z}$. *This polynomial* $P_{\mathscr{F}}$ *is called the* Hilbert polynomial of $\mathscr{F}$.

With the notation of 17.1.1(v), *for each* $j = 0, \ldots, d$, *we set* $e_j(\mathscr{F}) := e_j(P_{\mathscr{F}})$ *and refer to this as the* j-th Hilbert coefficient of $\mathscr{F}$. *Thus*

$$P_{\mathscr{F}}(X) = \sum_{i=0}^{d} (-1)^i e_i(\mathscr{F}) \binom{X+d-i}{d-i}.$$

Proof. By 20.4.5(v), there exists a finitely generated graded R-module N such that $\mathscr{F} \cong (\widetilde{N})_0$; by 20.4.10, $\dim \mathscr{F} = \dim N - 1$, so that $\dim N = d + 1$. Let $n \in \mathbb{Z}$ and $i \in \mathbb{N}$. We can now use 20.4.5(ii) and 20.3.15 to see that there are R_0-isomorphisms $\Gamma(T, \mathscr{F}(n)) \cong D_{R_+}(N)_n$ and $H^i(T, \mathscr{F}(n)) \cong \mathscr{H}^i D_{R_+}(N)_n \cong H^{i+1}_{R_+}(N)_n$.

Hence $h^i(T, \mathscr{F}(n)) = 0$ for all $i > d$, and, with the notation of 17.1.4, we have $\chi(\mathscr{F}(n)) = \chi_M(n)$. The result therefore follows from 17.1.6. □

20.4.14 Definitions and Exercise. (The hypotheses of 20.4.1 apply.) Assume that R_0 is Artinian and let $\mathscr{F}$ be a non-zero coherent sheaf of $\mathscr{O}_T$-modules. Let $i \in \mathbb{N}_0$. The function $h^i_{\mathscr{F}} : \mathbb{Z} \longrightarrow \mathbb{N}_0$ defined by $h^i_{\mathscr{F}}(n) = h^i(T, \mathscr{F}(n))$ for all $n \in \mathbb{Z}$ is referred to as the *i-th cohomological Hilbert function of* $\mathscr{F}$.

Show that there is a polynomial $p^i_{\mathscr{F}} \in \mathbb{Q}[X]$ of degree at most i such that $h^i_{\mathscr{F}}(n) = h^i(T, \mathscr{F}(n)) = p^i_{\mathscr{F}}(n)$ for all $n << 0$. The (uniquely determined) polynomial $p^i_{\mathscr{F}}$ is called the *i-th cohomological Hilbert polynomial of* $\mathscr{F}$.

Let $d := \dim \mathscr{F}$. Show that the leading term of $p^d_{\mathscr{F}}$ is

$$\frac{(-1)^d e_0(\mathscr{F})}{d!} X^d,$$

where $e_0(\mathscr{F})$ is as defined in 20.4.13.

The next exercise concerns Mumford's Regularity Bound (see [38, Theorem, p. 101]).

20.4.15 Exercise. Suppose that $R = R_0[X_0, X_1, \ldots, X_d]$ is a polynomial ring in $d+1$ indeterminates $X_0, X_1, \ldots, X_d$ over an Artinian local ring R_0, where $d \in \mathbb{N}$. Regard $R = \bigoplus_{n \in \mathbb{N}_0} R_n$ as graded in the usual way. As in 20.4.1, we set $T = \operatorname{Proj}(R)$. (Thus T is just $\mathbb{P}^d_{R_0}$, projective d-space over R_0: see [22, Chapter II, Example 2.5.1, p. 77].)

Let $\mathscr{I}$ be a non-zero coherent sheaf of ideals on T. Use Theorem 17.2.7 to show that $\operatorname{reg}(\mathscr{I}) \leq F_0^{(d+1)}(e_0(\mathscr{I}), \ldots, e_d(\mathscr{I}))$, where $F_0^{(d+1)}$ is as defined in 17.2.4 (with $r = 1$ and $a = 0$).

Also, use 17.2.8 to prove that the polynomial $\tilde{F}_0^{(d+1)} \in \mathbb{Q}[T_0, \ldots, T_d]$ satisfies $\operatorname{reg}(\mathscr{I}) \leq \tilde{F}_0^{(d+1)}(e_0(\mathscr{I}), \ldots, e_d(\mathscr{I}))$.

So far in this chapter, the results which we have obtained about sheaf cohomology have not been obviously related to local properties of the underlying sheaves. In our final sequence of results and exercises, we aim for the so-called Severi-Enriques-Zariski-Serre Vanishing Theorem (see F. Severi [57], F. Enriques [9], O. Zariski [66], and J.-P. Serre [56, §76, Théorème 4]), which establishes a fundamental link between the local structure of a coherent sheaf of $\mathcal{O}_T$-modules (conveyed by information about the depths of its stalks, for example) and global properties of the sheaf (described by the vanishing of certain cohomology groups, for example). Our approach to this Vanishing Theorem again makes use of the Serre-Grothendieck Correspondence, this time in conjunction with the Graded Finiteness Theorem 13.1.17.

20.4.16 ♯Exercise. (The hypotheses of 20.4.1 apply.) Assume that the graded R-module M is finitely generated, and set $\mathscr{F} := (\widetilde{M})_0$. Fix $\mathfrak{p} = x \in T$, and let $\mathfrak{m}_{T,x}$ denote the maximal ideal $(\mathfrak{p}R_{(\mathfrak{p})})_0$ of the local ring $\mathcal{O}_{T,x}$, which we identify with $(R_{(\mathfrak{p})})_0$ by means of the isomorphism of 20.4.3.

(i) Use 19.7.1(vi) to show that, if x is a closed point of T (so that $\mathfrak{p}$ is a maximal member of $\mathrm{Proj}(R)$ with respect to inclusion), then $\mathfrak{p} \cap R_0$ is a maximal ideal of R_0 and $\dim R/\mathfrak{p} = 1$.

(ii) Since R is homogeneous, there exists $t \in R_1 \setminus \mathfrak{p}$. Denote the ring of fractions $\mathcal{O}_{T,x}[X]_X$ of the polynomial ring $\mathcal{O}_{T,x}[X]$ by $\mathcal{O}_{T,x}[X, X^{-1}]$. Show that there is a unique homogeneous isomorphism of $\mathcal{O}_{T,x}$-algebras $\phi_t : \mathcal{O}_{T,x}[X, X^{-1}] \xrightarrow{\cong} R_{(\mathfrak{p})}$ for which $\phi_t(X) = t$.

(iii) Identify the stalk $\mathscr{F}_x$ with $(M_{(\mathfrak{p})})_0$ by means of the isomorphism of 20.4.3. Show that, when $M_{(\mathfrak{p})}$ is considered as an $\mathcal{O}_{T,x}[X, X^{-1}]$-module by means of the isomorphism ϕ_t of part (ii), there is a homogeneous isomorphism of graded $\mathcal{O}_{T,x}[X, X^{-1}]$-modules

$$\psi_{t,M} : \mathscr{F}_x \otimes_{\mathcal{O}_{T,x}} \mathcal{O}_{T,x}[X, X^{-1}] \xrightarrow{\cong} M_{(\mathfrak{p})}$$

for which $\psi_{t,M}(z \otimes f) = \phi_t(f)z$ for all $z \in (M_{(\mathfrak{p})})_0$ and $f \in \mathcal{O}_{T,x}[X, X^{-1}]$.

(iv) Show that the isomorphism ϕ_t of part (ii) leads to a ring isomorphism $\mathcal{O}_{T,x}[X]_{\mathfrak{m}_{T,x}\mathcal{O}_{T,x}[X]} \xrightarrow{\cong} R_{\mathfrak{p}}$. Conclude that $\dim \mathcal{O}_{T,x} = \mathrm{ht}\,\mathfrak{p}$, that $\mathrm{depth}\,\mathcal{O}_{T,x} = \mathrm{depth}\,R_{\mathfrak{p}}$, and that $\mathcal{O}_{T,x}$ is a domain, respectively normal, Cohen-Macaulay, Gorenstein, regular, if and only if $R_{\mathfrak{p}}$ has the same property.

(v) Show that the isomorphism $\psi_{t,M}$ of part (iii) gives rise to an isomorphism $\mathscr{F}_x \otimes_{\mathcal{O}_{T,x}} \mathcal{O}_{T,x}[X]_{\mathfrak{m}_{T,x}\mathcal{O}_{T,x}[X]} \xrightarrow{\cong} M_{\mathfrak{p}}$ of $\mathcal{O}_{T,x}[X]_{\mathfrak{m}_{T,x}\mathcal{O}_{T,x}[X]}$-modules. Conclude that $\mathrm{depth}_{\mathcal{O}_{T,x}} \mathscr{F}_x = \mathrm{depth}_{R_{\mathfrak{p}}} M_{\mathfrak{p}}$ and that $\mathscr{F}_x$ is free of rank r over $\mathcal{O}_{T,x}$ if and only if $M_{\mathfrak{p}}$ is free of rank r over $R_{\mathfrak{p}}$.

(vi) Let $\mathfrak{q} \in \mathrm{Spec}(R)$ be such that $\mathfrak{q}^* \subseteq \mathfrak{p}$. Show that $R_{\mathfrak{q}}$ is a domain,

respectively normal, Cohen-Macaulay, Gorenstein, regular, if $\mathcal{O}_{T,x}$ has the same property.

20.4.17 ♯Exercise. (The hypotheses of 20.4.1 apply.) Let $\pi : T = \mathrm{Proj}(R) \longrightarrow \mathrm{Spec}(R_0)$ be the natural map, defined by $\pi(\mathfrak{q}) = \mathfrak{q} \cap R_0$ for all $\mathfrak{q} \in T$. Fix $\mathfrak{p} = x \in T$. In the graded ring $R/\mathfrak{p}$, let $\Sigma(\mathfrak{p})$ denote the set of non-zero homogeneous elements of degree 0. Note that $\Sigma(\mathfrak{p})^{-1}(R/\mathfrak{p})$ is positively graded and homogeneous: set $T_{\langle x\rangle} := \mathrm{Proj}(\Sigma(\mathfrak{p})^{-1}(R/\mathfrak{p}))$.

(i) Show that there is a homeomorphism $T_{\langle x\rangle} \xrightarrow{\approx} \pi^{-1}(\{\pi(x)\}) \cap \overline{\{x\}}$, where the 'overline' is used to indicate closure in T.

(ii) Show that $\dim T_{\langle x\rangle} = \mathrm{ht}(R_+ + \mathfrak{p})/\mathfrak{p} - 1$.

20.4.18 Notation and Remark. (The hypotheses of 20.4.1 apply.) Let $\mathcal{F}$ be a coherent sheaf of $\mathcal{O}_T$-modules. We set

$$\delta(\mathcal{F}) := \inf\left\{\mathrm{depth}_{\mathcal{O}_{T,x}} \mathcal{F}_x + \dim T_{\langle x\rangle} : x \in T\right\},$$

where $T_{\langle x\rangle}$, for $x \in T$, is as defined in 20.4.17.

By 20.4.5(v), there exists a finitely generated graded R-module N such that $\mathcal{F} \cong (\widetilde{N})_0$; by 20.4.16(v), for $x = \mathfrak{p} \in T$, we have $\mathrm{depth}_{\mathcal{O}_{T,x}} \mathcal{F}_x = \mathrm{depth}_{R_\mathfrak{p}} N_\mathfrak{p}$. Therefore, by 20.4.17, with the notation of 9.2.2,

$$\begin{aligned}\delta(\mathcal{F}) &= \inf\{\mathrm{depth}\, N_\mathfrak{p} + \mathrm{ht}(R_+ + \mathfrak{p})/\mathfrak{p} - 1 : \mathfrak{p} \in {}^*\mathrm{Spec}(R) \setminus \mathrm{Var}(R_+)\}\\ &= \inf\left\{\mathrm{adj}_{R_+} \mathrm{depth}\, N_\mathfrak{p} - 1 : \mathfrak{p} \in {}^*\mathrm{Spec}(R) \setminus \mathrm{Var}(R_+)\right\}.\end{aligned}$$

In the case when R is a homomorphic image of a regular (commutative Noetherian) ring, we can deduce from the Graded Finiteness Theorem 13.1.17 that $\delta(\mathcal{F}) = f_{R_+}(N) - 1$. This observation is the key to our proof of the Severi-Enriques-Zariski-Serre Vanishing Theorem 20.4.20 below.

20.4.19 Exercise. (The hypotheses of 20.4.1 apply.) Let $\pi : T \longrightarrow \mathrm{Spec}(R_0)$ be the natural map. Assume that R_0 is Artinian, and let $\mathcal{F}$ be a coherent sheaf of $\mathcal{O}_T$-modules.

(i) Show that $\pi^{-1}(\{\pi(x)\}) \cap \overline{\{x\}} = \overline{\{x\}}$ for all $x \in T$.

(ii) Use 9.3.3 to show that

$$\delta(\mathcal{F}) = \inf\left\{\mathrm{depth}_{\mathcal{O}_{T,x}} \mathcal{F}_x : x \text{ is a closed point of } T\right\}.$$

20.4.20 The Severi-Enriques-Zariski-Serre Vanishing Theorem. (See Severi [57], Enriques [9], Zariski [66], and Serre [56, §76, Théorème 4].) *(The hypotheses of* 20.4.1 *apply.) Assume that R_0 is a homomorphic image of a regular (commutative*

Noetherian) ring. Let $\mathscr{F}$ be a coherent sheaf of $\mathcal{O}_T$-modules, and let $r \in \mathbb{N}_0$. Then $\delta(\mathscr{F}) > r$ if and only if $H^i(T, \mathscr{F}(j)) = 0$ for all $i \leq r$ and all $j << 0$.

Proof. By 20.4.5(v), there exists a finitely generated graded R-module N such that $\mathscr{F} \cong (\widetilde{N})_0$. By 20.4.4, there are homogeneous R-isomorphisms

$$\bigoplus_{j \in \mathbb{Z}} H^i(T, (\widetilde{N(j)})_0) \xrightarrow{\cong} H^{i+1}_{R_+}(N) \qquad \text{for all } i \in \mathbb{N}$$

and $\bigoplus_{j \in \mathbb{Z}} \Gamma(T, (\widetilde{N(j)})_0) \xrightarrow{\cong} D_{R_+}(N)$. Also, it follows from 2.2.4(i)(c) that $D_{R_+}(N)$ is finitely generated if and only if $H^1_{R_+}(N)$ is.

In view of [6, Proposition 1.5.4], the hypothesis on R_0 ensures that R is a homomorphic image of a regular (commutative Noetherian) ring. It therefore follows from 20.4.18 that $\delta(\mathscr{F}) = f_{R_+}(N) - 1$, so that $\delta(\mathscr{F}) > r$ if and only if the graded R-module $\bigoplus_{j \in \mathbb{Z}} H^i(T, (\widetilde{N(j)})_0)$ is finitely generated for all $i \leq r$. The desired conclusions follow from these observations and Serre's Finiteness Theorem 20.4.6. □

Our final exercises are intended to consolidate ideas involved in the Severi-Enriques-Zariski-Serre Vanishing Theorem.

20.4.21 Exercise. (The hypotheses of 20.4.1 apply.) Assume that R_0 is Artinian, and let $\mathscr{F}$ be a coherent sheaf of $\mathcal{O}_T$-modules. Recall that $\operatorname{Ass} \mathscr{F} := \{x \in T : \operatorname{depth}_{\mathcal{O}_{T,x}} \mathscr{F}_x = 0\}$. Show that the graded R-module $\Gamma_*(T, \mathscr{F}) = \bigoplus_{j \in \mathbb{Z}} \Gamma(T, \mathscr{F}(j))$ is finitely generated if and only if $\operatorname{Ass} \mathscr{F}$ contains no closed point of T.

20.4.22 Exercise. (The hypotheses of 20.4.1 apply.) Assume that R_0 is a field and that $T = \operatorname{Proj}(R)$ is connected. Set $d := \dim T$.

(i) Suppose that T is normal (see [22, Chapter II, Exercise 3.8, p. 91]), and that $d \geq 2$. Let $\mathscr{F}$ be a locally free (see [22, Chapter II, §5, p. 109]) coherent sheaf of $\mathcal{O}_T$-modules. Show that $H^1(T, \mathscr{F}(j)) = 0$ for all $j << 0$. (Compare this with Hartshorne's presentation of the Enriques-Severi-Zariski Lemma in [22, Chapter III, Corollary 7.8, p. 244].)

(ii) Suppose that T is regular, that is, the local ring $\mathcal{O}_{T,x}$ is regular for each $x \in T$. Let $\mathscr{F}$ be a coherent sheaf of $\mathcal{O}_T$-modules. Prove that $\mathscr{F}$ is locally free if and only if $H^i(T, \mathscr{F}(j)) = 0$ for all $i < d$ and all $j << 0$. (Note that this provides a cohomological characterization of locally free sheaves over the regular scheme T.)

Bibliography

[1] W. Barth, 'Verallgemeinerung des Bertinischen Theorems in Abelschen Mannigfaltigkeiten', *Ann. Sc. Norm. Sup. Pisa* 23 (1969) 317–330.

[2] M. Brodmann, 'A priori bounds of Castelnuovo type for cohomological Hilbert functions', *Comment. Math. Helvetici* 65 (1990) 478–518.

[3] M. Brodmann and C. Huneke, 'A quick proof of the Hartshorne-Lichtenbaum Vanishing Theorem', *Algebraic geometry and its applications* (Springer, New York, 1994), pp. 305–308.

[4] M. Brodmann and U. Nagel, 'Bounding cohomological Hilbert functions by hyperplane sections', *J. Algebra* 174 (1995) 323–348.

[5] M. Brodmann and J. Rung, 'Local cohomology and the connectedness dimension in algebraic varieties', *Comment. Math. Helvetici* 61 (1986) 481–490.

[6] W. Bruns and J. Herzog, *Cohen-Macaulay rings* (Cambridge University Press, 1993).

[7] F. W. Call and R. Y. Sharp, 'A short proof of the local Lichtenbaum-Hartshorne Theorem on the vanishing of local cohomology', *Bull. London Math. Soc.* 18 (1986) 261–264.

[8] D. Eisenbud and S. Goto, 'Linear free resolutions and minimal multiplicity', *J. Algebra* 88 (1984) 89–133.

[9] F. Enriques, *Le superficie algebriche* (Zanichelli, Bologna, 1949).

[10] G. Faltings, 'Über die Annulatoren lokaler Kohomologiegruppen', *Archiv der Math.* 30 (1978) 473–476.

[11] G. Faltings, 'Über Macaulayfizierung', *Math. Annalen* 238 (1978) 175–192.

[12] G. Faltings, 'Algebraisation of some formal vector bundles', *Annals of Math.* 110 (1979) 501–514.

[13] G. Faltings, 'Der Endlichkeitssatz in der lokalen Kohomologie', *Math. Annalen* 255 (1981) 45–56.

[14] D. Ferrand and M. Raynaud, 'Fibres formelles d'un anneau local Noethérien', *Ann. Sci. École Norm. Sup.* 3 (1970) 295–311.

[15] H.-B. Foxby, 'Gorenstein modules and related modules', *Math. Scand.* 31 (1972) 267–284.

[16] W. Fulton and J. Hansen, 'A connectedness theorem for projective varieties, with applications to intersections and singularities of mappings', *Annals of Math.* 110 (1979) 159–166.

[17] P. Gabriel, 'Des catégories abéliennes', *Bull. Soc. Math. France* 90 (1962) 323–448.

[18] A. Grothendieck, *Local cohomology*, Lecture Notes in Mathematics 41 (Springer, Berlin, 1967).

[19] A. Grothendieck, *Cohomologie locale des faisceaux cohérents et théorèmes de Lefschetz locaux et globaux (SGA 2)*, Séminaire de Géométrie Algébrique du Bois-Marie 1962 (North-Holland, Amsterdam, 1968).

[20] R. Hartshorne, 'Complete intersections and connectedness', *American J. Math.* 84 (1962) 497–508.

[21] R. Hartshorne, 'Cohomological dimension of algebraic varieties', *Annals of Math.* 88 (1968) 403–450.

[22] R. Hartshorne, *Algebraic geometry*, Graduate Texts in Mathematics 52 (Springer, New York, 1977).

[23] M. Herrmann, S. Ikeda and U. Orbanz, *Equimultiplicity and blowing up* (Springer, Berlin, 1988).

[24] J. Herzog and E. Kunz, *Der kanonische Modul eines Cohen-Macaulay-Rings*, Lecture Notes in Mathematics 238 (Springer, Berlin, 1971).

[25] J. Herzog and E. Kunz, *Die Wertehalbgruppe eines lokalen Rings der Dimension 1*, Sitzungsberichte der Heidelberger Akademie der Wissenschaften Mathematisch-naturwissenschaftliche Klasse, Jahrgang 1971 (Springer, Berlin, 1971).

[26] L. T. Hoa, 'Reduction numbers and Rees algebras of powers of an ideal', *Proc. American Math. Soc.* 119 (1993) 415–422.

[27] L. T. Hoa and C. Miyazaki, 'Bounds on Castelnuovo-Mumford regularity for generalized Cohen-Macaulay graded rings', *Math. Annalen* 301 (1995) 587–598.

[28] C. L. Huneke and R. Y. Sharp, 'Bass numbers of local cohomology modules', *Transactions American Math. Soc.* 339 (1993) 765–779.

[29] D. Kirby, 'Coprimary decomposition of Artinian modules', *J. London Math. Soc.* (2) 6 (1973) 571–576.

[30] I. G. Macdonald, 'Secondary representation of modules over a commutative ring', Symposia Matematica 11 (Istituto Nazionale di alta Matematica, Roma, 1973) 23–43.

[31] I. G. Macdonald, 'A note on local cohomology', *J. London Math. Soc.* (2) 10 (1975) 263–264.

[32] I. G. Macdonald and R. Y. Sharp, 'An elementary proof of the non-vanishing of certain local cohomology modules', *Quart. J. Math. Oxford* (2) 23 (1972) 197–204.

[33] T. Marley, 'The reduction number of an ideal and the local cohomology of the associated graded ring', *Proc. American Math. Soc.* 117 (1993) 335–341.

[34] E. Matlis, 'Injective modules over Noetherian rings', *Pacific J. Math.* 8 (1958) 511–528.

[35] H. Matsumura, *Commutative ring theory* (Cambridge University Press, 1986).

[36] L. Melkersson, 'On asymptotic stability for sets of prime ideals connected with the powers of an ideal', *Math. Proc. Cambridge Philos. Soc.* 107 (1990) 267–271.

[37] L. Melkersson, 'Some applications of a criterion for artinianness of a module', *J. Pure and Applied Algebra* 101 (1995) 291–303.

[38] D. Mumford, *Lectures on curves on an algebraic surface*, Annals of Mathematics Studies 59 (Princeton University Press, 1966).

[39] M. Nagata, *Local rings* (Interscience, New York, 1962).

[40] U. Nagel, 'On Castelnuovo's regularity and Hilbert functions', *Compositio Math.* 76 (1990) 265–275.

[41] U. Nagel and P. Schenzel, 'Cohomological annihilators and Castelnuovo-Mumford regularity', Contemporary Mathematics 159 (American Math. Soc., Providence, 1994), pp. 307–328.

[42] D. G. Northcott, *Ideal theory*, Cambridge Tracts in Mathematics and Mathematical Physics 42 (Cambridge University Press, 1953).

[43] D. G. NORTHCOTT, *An introduction to homological algebra* (Cambridge University Press, 1960).

[44] D. G. NORTHCOTT, 'Generalized Koszul complexes and Artinian modules', *Quart. J. Math. Oxford* (2) 23 (1972) 289–297.

[45] D. G. NORTHCOTT and D. REES, 'Reductions of ideals in local rings', *Proc. Cambridge Philos. Soc.* 50 (1954) 145–158.

[46] A. OOISHI, 'Castelnuovo's regularity of graded rings and modules', *Hiroshima Math. J.* 12 (1982) 627–644.

[47] C. PESKINE and L. SZPIRO, 'Dimension projective finie et cohomologie locale', *Inst. des Hautes Études Sci. Publ. Math.* 42 (1973) 323–395.

[48] L. J. RATLIFF, JR., 'Characterizations of catenary rings', *American J. Math.* 93 (1971) 1070–1108.

[49] D. REES, 'The grade of an ideal or module', *Proc. Cambridge Philos. Soc.* 53 (1957) 28–42.

[50] I. REITEN, 'The converse to a theorem of Sharp on Gorenstein modules', *Proc. American Math. Soc.* 32 (1972) 417–420.

[51] P. ROBERTS, *Homological invariants of modules over commutative rings*, Séminaire de Mathématiques Supérieures (Les Presses de l'Université de Montréal, 1980).

[52] J. J. ROTMAN, *An introduction to homological algebra* (Academic Press, Orlando, 1979).

[53] P. SCHENZEL, 'Einige Anwendungen der lokalen Dualität und verallgemeinerte Cohen-Macaulay-Moduln', *Math. Nachr.* 69 (1975) 227–242.

[54] P. SCHENZEL, 'Flatness and ideal-transforms of finite type', *Commutative algebra, Proceedings, Salvador 1988*, Lecture Notes in Mathematics 1430 (Springer, Berlin, 1990), pp. 88–97.

[55] P. SCHENZEL, N. V. TRUNG and N. T. CUONG, 'Verallgemeinerte Cohen-Macaulay-Moduln', *Math. Nachr.* 85 (1978) 57–73.

[56] J.-P. SERRE, 'Faisceaux algébriques cohérents', *Annals of Math.* 61 (1955) 197–278.

[57] F. SEVERI, *Serie, sistemi d'equivalenza e corrispondenze algebriche sulle varietà algebriche* (a cura di F. Conforto e di E. Martinelli, Roma, 1942).

[58] R. Y. SHARP, 'Some results on the vanishing of local cohomology modules', *Proc. London Math. Soc.* (3) 30 (1975) 177–195.

[59] R. Y. SHARP, 'On the attached prime ideals of certain Artinian local cohomology modules', *Proc. Edinburgh Math. Soc.* (2) 24 (1981) 9–14.

[60] R. Y. SHARP, *Steps in commutative algebra*, London Mathematical Society Student Texts 19 (Cambridge University Press, 1990).

[61] R. Y. SHARP and M. TOUSI, 'A characterization of generalized Hughes complexes', *Math. Proc. Cambridge Philos. Soc.* 120 (1996) 71–85.

[62] J. R. STROOKER, *Homological questions in local algebra*, London Mathematical Society Lecture Notes 145 (Cambridge University Press, 1990).

[63] J. STÜCKRAD and W. VOGEL, *Buchsbaum rings and applications* (Springer, Berlin, 1986).

[64] K. SUOMINEN, 'Localization of sheaves and Cousin complexes', *Acta Mathematica* 131 (1973) 27–41.

[65] N. V. TRUNG, 'Reduction exponent and degree bound for the defining equations of graded rings', *Proc. American Math. Soc.* 101 (1987) 229–236.

[66] O. ZARISKI, 'Complete linear systems on normal varieties and a generalization of a lemma of Enriques-Severi', *Annals of Math.* 55 (1952) 552–592.

[67] O. ZARISKI and P. SAMUEL, *Commutative algebra*, Vol. II, Graduate Texts in Mathematics 29 (Springer, Berlin, 1975).

Index

a priori bounds of diagonal type, 310, 402
$\mathfrak{a}$-adjusted depth, 157
  $\mathfrak{b}$-minimum ($\lambda_{\mathfrak{a}}^{\mathfrak{b}}(M)$), 157, 214
Abelian category, 218
acyclic module, 67–71, 226
  $\Gamma_{\mathfrak{a}}$-, 67, 219
affine
  algebraic cone, *see* cone
  n-space ($\mathbb{A}^n(K)$), 38
    complex ($\mathbb{A}^n$), 38
  open set, 355
  scheme, 391–392
  surface, 150
  variety, 38, 117–122, 378, 386
Affineness Criterion
  of Serre, 119
a-invariant, 262
analytic spread (spr($\mathfrak{b}$)), 330–333, 335, 338–339
analytically independent, 333
  in $\mathfrak{b}$, 329, 331–333
analytically irreducible
  local ring, 149
  variety, at p, 150, 356, 359
analytically reducible
  variety, at p, 150, 356
Annihilator Theorem
  of Faltings, 170, 178, 214
    Graded, 245
arithmetic
  depth, 272, 275, 291
  properties, of a projective variety, 272
arithmetic rank
  of a closed subset, with respect to a larger one ($\mathrm{ara}_W(Z)$), 361
    local, at p ($\mathrm{ara}_{W,p}(Z)$), 356
  of an ideal (ara($\mathfrak{a}$)), 56, 335, 348–351
arithmetically
  Cohen-Macaulay, 272, 275–276
  Gorenstein, 272, 274
Artinian
  local ring, 186–187, 300, 321–324, 403
  module, 123–127, 129–131, 146, 186–196, 208
  ring, 285, 297, 302–305, 309–310, 314–321, 402–403, 405
associated graded ring ($\mathscr{G}(\mathfrak{b})$), 330, 334–335, 373
attached prime ideal, 128
attached primes (Att), 128, 146, 191–192, 195, 208–215
$\mathfrak{a}$-torsion
  functor ($\Gamma_{\mathfrak{a}}$), 2
  module, 3, 18–21, 28, 110, 124, 379–381
  submodule, 3
$\mathfrak{a}$-torsion-free module, 3, 18
$\mathfrak{a}$-transform, 17, 22–38, 92, 154, 383
  functor ($D_{\mathfrak{a}}$), 17, 22–38, 224, 234, 383
    commutes with direct limits, 64

Baer Criterion, 219
basic ideal, 333
Bass number ($\mu^i(\mathfrak{p}, M)$), 199–200, 248, 252
beginning of a graded module (beg(M)), 238
Bertini's Connectivity Theorem, 362
Bertini-Grothendieck Connectivity Theorem, 361
$\mathfrak{b}$-finiteness dimension relative to $\mathfrak{a}$ ($f_{\mathfrak{a}}^{\mathfrak{b}}(M)$), 155
bounding system, 309
  minimal, 309
Buchsbaum
  module, 174
  ring, 174

canonical module, 206, 255–256
*canonical module, 253–259, 262–264
Cartesian curve, 373

Castelnuovo(-Mumford) regularity
of a coherent sheaf of $\mathcal{O}_T$-modules, 401
of a graded module ($\operatorname{reg}(M)$), 281–293, 337–338
at and above level 2 ($\operatorname{reg}^2(M)$), 295–298, 300, 303, 310–311, 319–320, 322–324
at and above level l ($\operatorname{reg}^l(M)$), 288, 337–338
of a projective variety ($\operatorname{reg}(V)$), 291, 311
category
Abelian, 218
$\mathscr{C}(R)$, $\mathscr{C}(R')$, xiv
$^*\mathscr{C}(R)$, 218
of all quasi-coherent sheaves of $\mathcal{O}_T$-modules (qcoh_T), 391
of all sheaves of $\widetilde{R}$-modules ($\mathscr{S}(\widetilde{R})$), 390
catenary ring, 156, 172
Čech complex, 83–94, 96, 224, 228–230
characteristic function, 312, 315
Chevalley's Theorem, 49
codimension
of a closed subvariety, 117
pure, 117
Cohen's Theorem, 207, 212
Cohen-Macaulay
local ring, 172, 206, 405
*local graded ring, 254–260, 262–264
module, 110, 167, 172, 178
generalized, 172–174, 178
quasi-, 172
ring, 167, 172, 175, 177–178, 236
cohomological Hilbert
function, 317, 403
polynomial, 317, 318, 403
cohomological lengths in the diagonal, 294, 310
complete local domain, 104, 140, 143, 349
complete local ring, 49, 140, 190–192, 197, 202, 207, 212, 245, 261, 349–351, 370
Connectedness Bound for, 350
completion, 144, 146, 147, 185, 188–189, 193–194, 207, 245, 352, 371–373
complex
affine n-space ($\mathbb{A}^n$), 38
Čech, *see* Čech complex
Koszul, *see* Koszul complex
projective r-space ($\mathbb{P}^r$), 270
cone, 266
affine algebraic, 266–269, 271, 359–360, 364–365
non-degenerate, 266
punctured, 268
connected sequence
negative, 10, 220
negative strongly, 10, 220
positive, 12
connected sequences
homomorphism of, 11, 220
isomorphism of, 11, 220
connected topological space, 343
Connectedness Bound for Complete Local Rings, 350
Connectedness Criterion for the Special Fibre, 371
connectedness dimension ($c(T)$), 345–347
formal, at p ($\widehat{c}_p(W)$), 355
local, at p ($c_p(T)$), 353
Connectedness Theorem
of Grothendieck, 351
Connectivity Theorem
Bertini-Grothendieck, 361
of Bertini, 362
of Fulton-Hansen and Faltings, 366
coordinate ring
homogeneous, 272, 291
of affine space, 38, 270
curve, 150, 272, 275
Cartesian, 373
cuspidal, 373
fully branched, at p, 150
Macaulay's, 276
rational normal, 274, 291–292
cuspidal curve, 373

Deligne Correspondence, 393
Graded Version of, 394
Deligne Isomorphism Theorem, 382, 385, 390
for Affine Schemes, 391
Graded, 388, 391
depth, 102, 109, 142–143, 156, 404
$\mathfrak{a}$-adjusted, 157
$\mathfrak{b}$-minimum ($\lambda^{\mathfrak{b}}_{\mathfrak{a}}(M)$), 157, 214
diagonal, 363
isomorphism, 363
dimension
$\mathfrak{b}$-finiteness relative to $\mathfrak{a}$ ($f^{\mathfrak{b}}_{\mathfrak{a}}(M)$), 155
connectedness, *see* connectedness dimension
finiteness relative to $\mathfrak{a}$ ($f_{\mathfrak{a}}(M)$), 154, 319
formal connectedness, *see* connectedness dimension
injective, 200
local, *see* local dimension
local connectedness, *see* connectedness dimension
of a coherent sheaf of $\mathcal{O}_T$-modules, 401
of a module, 103, 131
of a Noetherian topological space, 345
of a variety, 272
projective, 164–166, 292
disconnected topological space, 343
discrete valuation ring, 280, 281
dual, *see* Matlis

duality
local, 201–207
graded, 258–264
Matlis, 185–192
graded, 261

end of a graded module (end(M)), 238
equidimensional local ring, 167
essential extension, 179, 198, 248, 251
essential subset (with respect to S), 375
*essential extension, 247–253, 261
Euler characteristic ($\chi(\mathscr{F})$), 402
extended Rees ring ($R[\mathfrak{a}T, T^{-1}]$), 326
extension of an ideal, under f, 35, 68

Falting's
Annihilator Theorem, 170, 178, 214
Connectivity Theorem, 366
family of denominators, 377
family of fractions, 377
S-local, 377
family of homogeneous fractions, 386
S-local, 387
filter-regular sequence, 335–337
finiteness dimension relative to $\mathfrak{a}$ ($f_{\mathfrak{a}}(M)$), 154, 319
Local-global Principle for, 177–178
Finiteness Theorem
of Grothendieck, 170, 178
Graded, 245, 281
of Serre, 400
First Uniqueness Theorem (for secondary representation), 128
flasque sheaf, 393
Flat Base Change Theorem, 76, 211
Graded, 241, 282
flat ring homomorphism, 69–70, 75–78, 207, 211, 241, 282
formal connectedness dimension at p ($\widehat{c}_p(W)$), 355
formal fibres, 175, 177–178
full ring of fractions, 65
fully branched curve, at p, 150
Fulton-Hansen Connectivity Theorem, 366
function
characteristic, 312, 315
cohomological Hilbert, 317, 403
of polynomial type, 313
of reverse polynomial type, 314
functor
$\mathfrak{a}$-torsion ($\Gamma_{\mathfrak{a}}$), 2
$\mathfrak{a}$-transform ($D_{\mathfrak{a}}$), 17, 22–38, 224, 234, 383
local cohomology, 3
R-linear, 1, 6
section, 390, 393
sheaf cohomology, 393
shift, 218, 242, 388
Veronesean, 233

generalized Cohen-Macaulay module, 172–174, 178
Gorenstein
local ring, 142–143, 202–210, 212, 214–215, 405
*local graded ring, 257, 259, 264
ring, 201
grade, 109, 163–164, 166
Graded
Annihilator Theorem, 245
Deligne Correspondence, 394
Deligne Isomorphism Theorem, 388, 391
Finiteness Theorem, 245, 281
Flat Base Change Theorem, 241, 282
Independence Theorem, 240
Lichtenbaum-Hartshorne Vanishing Theorem, 245
graded local cohomology, 225–229
and the shift functor, 242
graded local duality, 258–264
Graded
Matlis Duality, 261
Mayer-Vietoris Sequence, 239
graded module, 217
associated to a sheaf, 399
beginning of (beg(M)), 238
*canonical, *see* *canonical module
end of (end(M)), 238
*indecomposable, 247–253
*injective, *see* *injective graded module
graded ring, 217
associated ($\mathscr{G}(\mathfrak{b})$), 330, 334–335, 373
*local, *see* *local graded ring
Cohen-Macaulay, *see* Cohen-Macaulay
Gorenstein, *see* Gorenstein
Grothendieck's
Connectedness Theorem, 351
Finiteness Theorem, 170, 178
Vanishing Theorem, 103

Hartshorne's Example, 42, 44–45, 57, 78, 121, 149, 356, 357
height
of a proper ideal, 21, 77, 348
of the improper ideal, 157
Hilbert
coefficients, 317, 319–324, 403
polynomial, 312–324, 403
cohomological, 317, 318, 403
Hilbert's Theorem, 317
Hoa's Theorem, 340
homogeneous
coordinate ring, 272, 291
localization, 238, 399
positively graded ring, 277, 295–298, 300, 302–305, 309, 314–319, 334
regular function, 266

ring homomorphism, 238
S-local family of fractions, 387
Homogeneous Prime Avoidance Lemma, 278
homomorphism of connected sequences, 11, 220
hypersurface, 362

ideal transform, 22–38, 92, 224, 234, 378
conditions for exactness of, 112–116, 119, 149
geometrical significance of, 38–41
is independent of the base ring, 36
right derived functors of, 22–23, 242, 314
universal property of, 28–32, 231
indecomposable module, 181–182
*indecomposable graded module, 247–253
Independence Theorem, 71
Graded, 240
injective
cogenerator, 130
dimension, 200
envelope, 179–185, 198–200
hull, 179
module, 19, 69, 70, 137, 179–185, 192, 198–201
resolution, 3, 19, 72, 76, 198–202
minimal, 198–202
*injective
envelope, 247–253, 261
graded module, 217–220, 225, 226, 233, 247–253, 394
hull, 247
resolution, 217, 248, 251
minimal, 248, 251–252
integral closure, of $\mathfrak{a}$ ($\bar{\mathfrak{a}}$), 327
integrally dependent, on $\mathfrak{a}$, 326–327
Intersection Inequality for the Connectedness Dimensions
of Affine Algebraic Cones, 364
of Projective Algebraic Sets, 366
inverse family of ideals, 8, 48
inverse polynomials, 230
irreducible
component, 343
ideal, 182
topological space, 343
irrelevant ideal (R_+), 265, 268
isomorphism of connected sequences, 11, 220

Koszul complex, 94–101, 231
Krull dimension of a module, 103

Lichtenbaum-Hartshorne Vanishing Theorem, 144–147, 202
Graded, 245
line, 270
local arithmetic rank, *see* arithmetic rank
local cohomology
and depth, 109–110
and dimension, 103–106, 126–127, 132–135, 140
and grade, 109
functor, 3
commutes with direct limits, 64
graded, 225–229
and the shift functor, 242
module, 3
local connectedness dimension, at p ($c_p(T)$), 353
local dimension, at p ($\dim_p T$), 353
local duality, 201–207
graded, 258–264
Local-global Principle for Finiteness Dimensions, 177–178
*local graded ring, 238, 244, 254, 261
Cohen-Macaulay, *see* Cohen-Macaulay
Gorenstein, *see* Gorenstien
local ring
analytically irreducible, 149
Artinian, *see* Artinian
Cohen-Macaulay, *see* Cohen-Macaulay
complete, *see* complete local ring
equidimensional, 167
Gorenstein, *see* Gorenstein
of a quasi-affine variety, at q ($\mathcal{O}_{W,q}$), 117
regular, *see* regular local ring
universally catenary, 175, 177–178, 352
local subdimension, at p ($\operatorname{sdim}_p T$), 353
local vanishing ideal, at p ($I_{V,p}(C)$), 355
locally free coherent sheaf, 406

Macaulay's curve, 276
Matlis dual, 185
graded, 261
Matlis duality, 185–192
Matlis Duality Theorem, 190
Partial, 194
maximal M-sequence, 108
*maximal graded ideal, 238
Mayer-Vietoris Sequence, 53, 369
Graded, 239
Melkersson's Theorem, 124, 185
metric topology, 44
M-grade, 109, 293
minimal graded free resolution, 292
minimal injective resolution, 198–202
minimal *injective resolution, 248
minimal reduction, 326, 338, 340
minimal secondary representation, 128, 211
module
acyclic, 67–71, 226
$\Gamma_{\mathfrak{a}}$-, 67, 219
Artinian, *see* Artinian
$\mathfrak{a}$-torsion, *see* $\mathfrak{a}$-torsion module

module (*cont.*)
  $\mathfrak{a}$-torsion-free, *see* $\mathfrak{a}$-torsion-free module
  Buchsbaum, 174
  canonical, *see* canonical module
  *canonical, *see* *canonical module
  Cohen-Macaulay, *see* Cohen-Macaulay
  faithful, 187
  generalized Cohen-Macaulay, 172–174, 178
  graded, 217
  indecomposable, 181–182
  injective, *see* injective module
  local cohomology, 3
  of inverse polynomials, 230
  projective, 65
  p-secondary, 127
  quasi-Cohen-Macaulay, 172
  representable, 128
  secondary, 127
  sum-irreducible, 129
morphism
  of sheaves, 390
    induced, 390
  of varieties, 117, 118
M-regular sequence, 108
  filter-, 335–337
M-sequence, 15, 26, 108, 110, 111, 293
  maximal, 108
  poor, 108, 386
  weak, 174
multiplicatively closed subset, xiv
multiplicity, 317
Mumford's Regularity Bound, 403

natural gradings, 388, 395
n-complement, 84
negative
  connected sequence, 10, 220
  strongly connected sequence, 10, 220
Noetherian topological space, 344
Non-vanishing Theorem, 105, 132, 209–210
numerical invariant, 309–311
  finite, 309
numerical polynomial, 313

open set
  affine, 355
  quasi-affine, 355

parameter, 173
Partial Matlis Duality Theorem, 194
p-component, 353
pole, 46
  isolated, 46
polynomial ring, 72, 91, 147, 167, 178, 230, 235, 257, 261, 264, 281, 288, 292, 310, 319–324, 331, 403
  Veronesean subring of, 234, 236, 264, 286, 291
poor M-sequence, 108, 386
positive connected sequences, 12
product of varieties, 363
projective
  algebraic set, 270
  dimension, 164–166, 292
  module, 65
  r-space ($\mathbb{P}^r(K)$), 270
    complex ($\mathbb{P}^r$), 270
  scheme, 398–406
  spectrum (Proj(R)), 368–373
  variety, 269–276, 291, 292, 360–362, 366–367
projectivization, 271
p-secondary module, 127
punctured
  cone, 268
  set, 212
  spectrum, 346

quasi-affine
  open set, 355
  variety, 38, 117–122, 150
    analytically irreducible, at p, 150
    analytically reducible, at p, 150
quasi-Cohen-Macaulay module, 172
quasi-compact topological space, 343
quasi-projective variety, 270, 354, 355

radical ideal, 166
rational normal curve, 274, 291–292
Ratliff's Theorem, 175, 178, 352
reduction, 2, 325–333
  minimal, 326, 338, 340
  number, 326, 334, 338, 340
*reduction, 334, 336
Rees ring ($\mathscr{R}(\mathfrak{a})$), 372, 373
  extended ($R[\mathfrak{a}T, T^{-1}]$), 326
regular local ring, 73, 110, 112, 147, 167, 171–172, 207, 212, 405
regular ring, 77, 163, 166–170, 245, 269, 405
Regularity Bound
  of Mumford, 403
regularity (Castelnuovo-Mumford),
  of a coherent sheaf of $\mathscr{C}_T$-modules, *see* Castelnuovo
  of a graded module (reg(M)), *see* Castelnuovo
    at and above level 2 (reg$^2(M)$), *see* Castelnuovo
    at and above level l (reg$^l(M)$), *see* Castelnuovo
representable R-module, 128
restriction, 221
restriction map, 377

*restriction property, 221–229, 231, 232, 238, 240, 241, 389, 391, 394–397
R_+-filter-regular sequence, 335–337
right bounding function, 299
ring
  Artinian, *see* Artinian
  Buchsbaum, 174
  catenary, 156, 172
  Cohen-Macaulay, *see* Cohen-Macaulay
  discrete valuation, 280, 281
  Gorenstein, 201
  graded, 217
  of polynomials, *see* polynomial ring
  regular, *see* regular ring
  regular local, *see* regular local ring
ring homomorphism
  flat, *see* flat ring homomorphism
  homogeneous, 238
ringed space, 389
R-linear functor, 1, 6
r-regular (in the sense of Castelnuovo-Mumford), 282, 287, 401
  at and above level l, 282
Rung's display, 369, 370

scheme
  affine, 391–392
  projective, 398–406
Second Uniqueness Theorem (for secondary representation), 129
secondary
  module, 127
  representation, 127–131, 146
    First Uniqueness Theorem for, 128
    minimal, 128, 211
    Second Uniqueness Theorem for, 129
section functor, 390, 393
sections of a sheaf, 389
Serre's
  Affineness Criterion, 119
  Finiteness Theorem, 400
Serre-Grothendieck Correspondence, 396
  classical form of, 399
Severi-Enriques-Zariski-Serre Vanishing Theorem, 404, 405
sheaf
  associated to M, 391, 398
  cohomology functor, 393
  induced, 389
    flasque, 393
  locally free coherent, 406
  of R-algebras, 389
  of $\widetilde{R}$-modules, 389
  sections of, 389
  twisted, 399
sheaves
  morphism of, 390
shift
  functor, 218, 242, 388
  of a complex, 87
Shifted Localization Principle, 208, 212, 215
  Weak General, 211, 215
S-local family of fractions, 377
socle, 188
special fibre, 369–372
  Connectedness Criterion for, 371
stalk, 390, 397
structure sheaf of an affine scheme, 391
S-topology, 376
subdimension (sdim T), 347–352
  local, at p ($\mathrm{sdim}_p\, T$), 353
sum-irreducible module, 129
surface, 272
  affine, 150
symbolic powers, 49, 137, 143, 182, 202
symmetric semigroup, 264
system of ideals, 21, 48–51
system of parameters, 173–174
  standard, 173–174
syzygies, 292

topological space
  connected, 343
  disconnected, 343
  irreducible, 343
  Noetherian, 344
  quasi-compact, 343
topology
  metric, 44
  Zariski, 165, 212, 270, 376
    on Proj(R), 369, 376
trivial extension, 111
twisted
  cubic, 274, 276
  quartic, 276
  sheaf, 399

universally catenary local ring, 175, 177–178, 352

vanishing ideal, 266, 271, 292
  local, at p, *see* local vanishing ideal
Vanishing Theorem
  Lichtenbaum-Hartshorne, 144–147, 202
  of Grothendieck, 103
  Severi-Enriques-Zariski-Serre, 404, 405
variety, 271, 355
  affine, *see* affine variety
  of an ideal (Var($\mathfrak{a}$)), xiv
  projective, *see* projective variety
    arithmetically Cohen-Macaulay, 272, 275–276
    arithmetically Gorenstein, 272, 274
  quasi-affine, *see* quasi-affine variety
  quasi-projective, *see* quasi-projective variety

Veronesean, 273, 291
  functor, 233
  map, 274
  subring, 233
    of a polynomial ring, 234, 236, 264, 286, 291
  transformation, 272, 274

Weak General Shifted Localization Principle, 211, 215
weak M-sequence, 174

Zariski topology, 165, 212, 270, 376
  on Proj(R), 369, 376
Zariski's Main Theorem, 373