arXiv:1210.6399v3 [math.QA] 16 Sep 2014

QUANTUM MATRICES BY PATHS

KAREL CASTEELS

Abstract. We study, from a combinatorial viewpoint, the *quantized coordinate ring of* $m \times n$ *matrices* over an infinite field $\mathbb{K}$, $\mathcal{O}_q(\mathcal{M}_{m,n}(\mathbb{K}))$ (often simply called *quantum matrices*).The first part of this paper shows that $\mathcal{O}_q(\mathcal{M}_{m,n}(\mathbb{K}))$, which is traditionally defined by generators and relations, can be seen as a subalgebra of a quantum torus by using paths in a certain directed graph. Roughly speaking, we view each generator of $\mathcal{O}_q(\mathcal{M}_{m,n}(\mathbb{K}))$ as a sum over paths in the graph, each path being assigned an element of the quantum torus. The $\mathcal{O}_q(\mathcal{M}_{m,n}(\mathbb{K}))$ relations then arise naturally by considering intersecting paths. This viewpoint is closely related to Cauchon's deleting derivations algorithm.

The second part of this paper applies the above to the theory of torus-invariant prime ideals of $\mathcal{O}_q(\mathcal{M}_{m,n}(\mathbb{K}))$. We prove a conjecture of Goodearl and Lenagan that all such prime ideals, when the quantum parameter q is a non-root of unity, have generating sets consisting of quantum minors. Previously, this result was known to hold only when $\mathrm{char}(\mathbb{K}) = 0$ and with q transcendental over $\mathbb{Q}$. Our strategy is to prove the stronger result that the quantum minors in a given torus-invariant ideal form a Gröbner basis.

1. Introduction

The purpose of this paper is to introduce a "combinatorial model" of $\mathcal{O}_q(\mathcal{M}_{m,n}(\mathbb{K}))$, the quantized coordinate ring of $m \times n$ matrices over a field $\mathbb{K}$ (simply called *quantum matrices*). We demonstrate the utility of this model by using it to study the prime spectrum of $\mathcal{O}_q(\mathcal{M}_{m,n}(\mathbb{K}))$.

Quantum matrices have generated a good deal of interest since their discovery during the initial development of quantum group theory in the 1980's. This is because not only do quantum matrices underlie many of the traditional quantum groups such as the quantum special and general linear groups, but there are also interesting connections with topics such as braided tensor categories and knot theory. See [20] for a brief survey. More recently, it has been observed [8, 9, 17] that the prime spectrum of quantum matrices is deeply related to the theory of totally nonnegative matrices and the *totally nonnegative grassmannian* in the sense of Postnikov [19].

Since the late 1990's, much effort has been expended toward understanding the structure of the prime and primitive spectra of various quantum algebras. Quantum matrices have received particular attention since, while this algebra has a seemingly simple structure (for example, it is an iterated Ore extension over the field $\mathbb{K}$), many problems have proven difficult to resolve.

In particular, the machineries employed to analyze $\mathrm{Spec}(\mathcal{O}_q(\mathcal{M}_{m,n}(\mathbb{K})))$ have tended to use fairly sophisticated viewpoints from noncommutative ring theory and representation theory and even then often require extra restrictions on the base field $\mathbb{K}$ and choice of quantum parameter q.

The $\mathcal{H}$-stratification theory of Goodearl and Letzter [13] (see also [2]) is an important advancement toward understanding the prime and primitive spectra of some quantum algebras. Briefly, many noncommutative rings support a rational action of a torus $\mathcal{H}$ which allows one to partition the prime spectrum of the ring into finitely many *$\mathcal{H}$-strata*, each $\mathcal{H}$-stratum homeomorphic (with respect to the usual Zariski topology) to the prime spectrum of a Laurent polynomial ring in finitely many commuting indeterminates, and each containing a unique $\mathcal{H}$-invariant prime ideal. Moreover, the primitive ideals of the algebra are precisely those that are maximal within their $\mathcal{H}$-stratum. For these reasons, an important first step towards understanding the prime and primitive spectra is to first study the $\mathcal{H}$-invariant prime ideals called *$\mathcal{H}$-primes.*

The deleting derivations algorithm of Cauchon [5, 6] has also proven quite useful. Roughly speaking, this procedure shows that when the $\mathcal{H}$-stratification theory applies to a given quantum algebra, one can often embed the set of $\mathcal{H}$-primes into the set of $\mathcal{H}$-primes of a *quantum affine space.* This is convenient since quantum affine spaces are typically easy to handle thanks to results of Goodearl and Letzter [12]. The strategy then is to reverse the deleting derivations procedure in order to transfer (more easily obtained) information about the quantum affine space back to information about the quantum algebra.

The $\mathcal{H}$-stratification and the deleting derivations theories both apply to quantum matrices in the generic case, i.e., when the parameter q is a nonroot of unity, and so a natural problem is to find generating sets for the $\mathcal{H}$-primes. For 2×2 quantum matrices, this problem is fairly straightforward, yet even the 3×3 case required a significant amount of work by Goodearl and Lenagan [10, 11]. However, in all cases their generating sets consisted of *quantum minors* and so it was conjectured that this held true in general. Launois [15, 16] was the first to prove this conjecture under the constraints $\mathbb{K} = \mathbb{C}$ and q transcendental over $\mathbb{Q}$. This was later extended to any $\mathbb{K}$ of characteristic zero [8].

An important part of Cauchon's results is a parametrization of the $\mathcal{H}$-primes of quantum matrices using what are now known in the quantum algebra community as *Cauchon diagrams.* It turns out that a Cauchon diagram encodes fundamental information about the corresponding $\mathcal{H}$-stratum. For example, the Krull dimension can be easily calculated from the Cauchon diagram using the main result of [1]. Launois also described an algorithm to find the generators of a given $\mathcal{H}$-prime from its Cauchon diagram, but the calculations involved very quickly become unwieldy. A graph theoretic interpretation of Launois' algorithm provided in [4] forms the starting point

for some of the results presented below. In fact, much of Section 3.1 may be seen as a combinatorial interpretation of the deleting derivations algorithm.

It is notable that Cauchon diagrams arose independently in work of Postnikov [19] in his investigations of the totally nonnegative Grassmannian. In this context, Cauchon diagrams are called ɹ-diagrams (also Le-diagrams) and have been investigated by several authors (see Lam and Williams [14] and Talaska [21] in particular). The connections between these two areas and Poisson geometry have been explored by Goodearl, Launois and Lenagan [9, 8].

Finally, let us also mention that Yakimov [22, 23] has developed representation theoretic methods with great success. In particular, he has independently verified (and generalized) Goodearl and Lenagan's conjecture, but again, only under the constraint that $\mathrm{char}(\mathbb{K}) = 0$ and q transcendental over $\mathbb{Q}$. Furthermore, the generating sets obtained are actually smaller than Launois' in general. It is unclear how Yakimov's work relates to the viewpoint presented in this paper, however, recent work of Geiger and Yakimov [7] explore the connections between Yakimov's work and Cauchon's, and so there is quite possibly a close relationship.

As will be reviewed in Section 2, the usual description of $\mathcal{O}_q(\mathcal{M}_{m,n}(\mathbb{K}))$ is by generators and relations. Our approach to $\mathcal{O}_q(\mathcal{M}_{m,n}(\mathbb{K}))$ is the focus of Section 3 where we begin by giving a directed graph and assign elements ("weights") of a quantum torus to directed paths. We then discuss various subalgebras of the quantum torus generated by sums over path weights. In particular, Corollary 3.2.5 shows that quantum matrices can be so obtained. One nice aspect of this is that the quantum matrix relations naturally arise by considering intersecting paths (see the proofs of Theorem 3.1.12 and Theorem 3.2.3).

While at first it may appear that the description of quantum matrices "by paths" is a mere curiosity, it is in fact an indispensable tool in the bulk of this paper, Section 4. Here, the Goodearl-Lenagan conjecture is an immediate corollary to a stronger result, Theorem 4.4.1, which states that for *any* infinite field $\mathbb{K}$ and non-root of unity $q \in \mathbb{K}^*$, the quantum minors in a given $\mathcal{H}$-prime form a Gröbner basis with respect to a certain term ordering. The difficulty with this approach is that for a given $\mathcal{H}$-prime of $\mathcal{O}_q(\mathcal{M}_{m,n}(\mathbb{K}))$, *a priori* we do not know any generating sets at all to which we can apply Buchberger's algorithm, so we must check that the minors form a Gröbner basis by direct verification of the definition. The way we do this is by using the strategy noted above for the deleting derivations algorithm. That is, we transfer an (easily obtained) Gröbner basis for an $\mathcal{H}$-prime in a quantum affine space to a Gröbner basis for an $\mathcal{H}$-prime in quantum matrices.

Finally, many nonstandard terms and notation have been invented for use in this paper. An combined index and glossary is provided in an appendix to assist the reader in more easily locating the definitions should the need arise.

2. Quantum Matrices

Let us first set some data, notation and conventions that are to be used throughout this paper.

- Fix: an infinite field $\mathbb{K}$, integers $m, n \geq 2$, and a nonzero, non-root of unity $q \in \mathbb{K}$.
- For a positive integer k, we set $[k] = \{1, 2, \ldots, k\}$.
- The set of $m \times n$ matrices with integer entries is denoted by $\mathcal{M}_{m,n}(\mathbb{Z})$. The set of $m \times n$ matrices with non-negative integer entries is denoted by $\mathcal{M}_{m,n}(\mathbb{Z}_{\geq 0})$.
- The (i, j)-entry of $N \in \mathcal{M}_{m,n}(\mathbb{Z})$ is denoted by $(N)_{i,j}$, and (i, j) is called the *coordinate* of this entry. In view of this, the elements of $[m] \times [n]$ are called coordinates.
- We often describe relative positions of coordinates using the usual meaning of terms such as north, northwest etc. For example, (i, j) is *northwest* of (r, s) if $i < r$ and $j < s$, and *north* if $i < r$ and $j = s$.

The restriction $m, n \geq 2$ is made simply to avoid some inconveniences in various definitions that would occur if $m = 1$ or $n = 1$. Fortunately, it is already known that all results presented in this paper hold when $m = 1$ or $n = 1$ since in these cases, all algebras in this paper reduce to quantum affine spaces, and such algebras can be dealt with using results of [12].

2.1. The Algebras $R^{(t)}$.

Definition 2.1.1. The *lexicographic order* on $[m] \times [n]$ is the total order $<$ obtained by setting

$$(i, j) < (k, \ell) \Leftrightarrow i < k, \text{ or, } i = k \text{ and } j < \ell.$$

If $(i, j) \in [m] \times [n]$, then $(i, j)^-$ denotes the largest element less than (i, j) with respect to the lexicographic order.

Note 2.1.2. Any reference in this paper relating to an ordering of the coordinates $[m] \times [n]$ is with respect to the lexicographic order.

The algebras in the next definition each have a set of generators indexed by $[m] \times [n]$. It is natural to place these generators as the entries of an $m \times n$ matrix that we call the *matrix of generators*.

Definition 2.1.3. Let $t \in [mn]$ and set (r, s) to be the tth smallest coordinate. Define $R^{(t)}$ to be the $\mathbb{K}$-algebra with the $m \times n$ matrix of generators $X = [x_{i,j}]$ subject to the following relations. If

$$\begin{bmatrix} a & b \\ c & d \end{bmatrix}$$

is any 2×2 submatrix of X, then:

(1) $ab = qba$, $cd = qdc$;
(2) $ac = qca$, $bd = qdb$;
(3) $bc = cb$;

(4) $ad = \begin{cases} da, & \text{if } d = x_{k,\ell} \text{ and } (k,\ell) > (r,s); \\ da + (q-q^{-1})bc, & \text{if } d = x_{k,\ell} \text{ and } (k,\ell) \leq (r,s). \end{cases}$

Example 2.1.4. If $m = 2$, $n = 3$ and $t = 5$, then $(r,s) = (2,2)$ and $R^{(5)}$ has matrix of generators

$$\begin{bmatrix} x_{1,1} & x_{1,2} & x_{1,3} \\ x_{2,1} & x_{2,2} & x_{2,3} \end{bmatrix}.$$

The relations corresponding to Part 4 of Definition 2.1.3 are

$$\begin{aligned} x_{1,1}x_{2,2} &= x_{2,2}x_{1,1} + (q-q^{-1})x_{1,2}x_{2,1} \\ x_{1,1}x_{2,3} &= x_{2,3}x_{1,1} \\ x_{1,2}x_{2,3} &= x_{2,3}x_{1,2}. \end{aligned}$$

The two extremities in the collection of $R^{(t)}$ are of the most interest to us.

Notation 2.1.5. With respect to the notation in Definition 2.1.3:

(1) If $t = 1$, then in Part 4 of Definition 2.1.3 we always have

$$ad = da.$$

We call this algebra $m \times n$ *quantum affine space*, denoted $\mathcal{O}_q(\mathbb{K}^{m\times n})$. The entries of the matrix of generators of $\mathcal{O}_q(\mathbb{K}^{m\times n})$ will often be labeled by $t_{i,j}$ for $(i,j) \in [m] \times [n]$.

(2) If $t = mn$, then in Part 4 of Definition 2.1.3 we always have

$$ad = da + (q-q^{-1})bc.$$

This algebra is the *quantized coordinate ring of* $m \times n$ *matrices over* $\mathbb{K}$, denoted by $\mathcal{O}_q(\mathcal{M}_{m,n}(\mathbb{K}))$ and simply referred to as $(m\times n)$ *quantum matrices.*

(3) The localization of $R^{(1)} = \mathcal{O}_q(\mathbb{K}^{m\times n})$ with respect to the multiplicative set generated by the standard generators $t_{i,j}$ is called the $(m\times n)$ *quantum torus* $\mathcal{O}_q((\mathbb{K}^\times)^{m\times n})$.

(4) Two elements $y, z \in R^{(t)}$ will be said to q^**-commute* if there is an integer r such that $yz = q^r zy$. Note that commuting elements q^*-commute.

In later sections, we work intimately with monomials in the generators of $R^{(t)}$, so we here set some notation in this respect. For the remainder of this section, fix $t \in [mn]$ and let $[x_{i,j}]$ be the matrix of generators for $R^{(t)}$.

Notation 2.1.6. If $N \in \mathcal{M}_{m,n}(\mathbb{Z}_{\geq 0})$, then we write

$$\boldsymbol{x}^N = x_{1,1}^{(N)_{1,1}} x_{1,2}^{(N)_{1,2}} \cdots x_{m,n}^{(N)_{m,n}} \in R^{(t)},$$

written so that the indices obey the lexicographic order from smallest to largest as one goes from left to right. We call such a monomial a *lexicographic*

term. Similar notation will be used both for the quantum torus (where $N \in \mathcal{M}_{m,n}(\mathbb{Z})$), and, if (r,s) is the tth smallest coordinate, for $R^{(t)}[x_{r,s}^{-1}]$ (where all entries of N are non-negative except possibly the (r,s)-entry).

It is not difficult to check that each $R^{(t)}$ may be written as an iterated Ore extension which immediately yields the following.

Theorem 2.1.7. *The following properties hold for every $t \in [mn]$.*

(1) *$R^{(t)}$ is a Noetherian domain.*
(2) *As a $\mathbb{K}$-vector space, $R^{(t)}$ has a basis consisting of the lexicographic terms $\boldsymbol{x}^N$ with $N \in \mathcal{M}_{m,n}(\mathbb{Z}_{\geq 0})$. The same properties also hold for the $m \times n$ quantum torus (but with $N \in \mathcal{M}_{m,n}(\mathbb{Z})$).* □

Definition 2.1.8. The *lexicographic expression* of $a \in R^{(t)}$ is the unique linear combination $a = \sum_{N \in \mathcal{M}_{m,n}(\mathbb{Z}_{\geq 0})} \alpha_N \boldsymbol{x}^N$ of distinct lexicographic terms with $\alpha_N \neq 0$. A lexicographic term in this expression will be called a *lex term* of a.

For $R^{(1)} = \mathcal{O}_q(\mathbb{K}^{m\times n})$, we will require a slight extension of Theorem 2.1.7. Observe that any monomial $\boldsymbol{t} = t_{i_1,j_1} t_{i_2,j_2} \cdots t_{i_\ell,j_\ell}$ in the standard generators of $R^{(1)}$ may be written as $\boldsymbol{t} = q^\ell \boldsymbol{t}^{M^{\text{lex}}}$ for some integer ℓ and lexicographic term $\boldsymbol{t}^{M^{\text{lex}}}$. Since $q^\ell \neq 0$, the next result follows easily.

Proposition 2.1.9. *For any coordinate (r,s), the set of lexicographic monomials of $\mathcal{O}_q(\mathbb{K}^{m\times n})$ involving only $t_{i,j}$ with $(i,j) > (r,s)$ is linearly independent over the subalgebra generated by the $t_{i,j}$ with $(i,j) \leq (r,s)$. Moreover, for a set $\{\boldsymbol{t}_1, \boldsymbol{t}_2, \ldots, \boldsymbol{t}_\ell\}$ of monomials in the standard generators of $\mathcal{O}_q(\mathbb{K}^{m\times n})$, the following are equivalent.*

(1) *The set $\{\boldsymbol{t}_1, \boldsymbol{t}_2, \ldots, \boldsymbol{t}_\ell\}$ is linearly independent over $\mathbb{K}$.*
(2) *The set $\{\boldsymbol{t}_1^{M_1^{\text{lex}}}, \boldsymbol{t}_2^{M_2^{\text{lex}}}, \ldots, \boldsymbol{t}_\ell^{M_\ell^{\text{lex}}}\}$ is linearly independent over $\mathbb{K}$.*
(3) *The matrices $M_1^{\text{lex}}, \ldots, M_\ell^{\text{lex}}$ are distinct.*

A similar set of statements hold for the $m \times n$ quantum torus. □

We conclude this section by noting that $R^{(t)}$ has a natural $\mathbb{Z}_{\geq 0}^{m+n}$-grading that will be very much exploited in the proof of Theorem 4.4.1. If

$$\boldsymbol{s} = (r_1, r_2, \ldots, r_m, c_1, c_2, \ldots, c_n) \in (\mathbb{Z}_{\geq 0})^{m+n},$$

then the homogeneous component of degree $\boldsymbol{s}$ is the subspace of $R^{(t)}$ spanned by the lexicographic monomials of the form $\boldsymbol{x}^N$, where N satisfies

$$\sum_{j=1}^{n} (N)_{i,j} = r_i, \text{ for all } i \in [m], \text{ and}$$
$$\sum_{i=1}^{m} (N)_{i,j} = c_j, \text{ for all } j \in [n].$$

In other words, the sum of all entries in row i of N equals r_i, and the sum of all entries in column j of N equals c_j. All references in this paper to a grading on $R^{(t)}$ will be with respect to this grading.

2.2. **The Deleting Derivations Algorithm.** The relationship between $R^{(t)}$ and $R^{(t-1)}$ has been studied by Cauchon [6] as a special case of the more general theory developed in [5]. Here, we review his results as they apply to these algebras. For each result in this section, we fix $t \in [mn]$ with $t \neq 1$, let (r, s) denote the tth smallest coordinate, and let $[x_{i,j}]$ be the matrix of generators of $R^{(t)}$ and $[y_{i,j}]$ the matrix of generators for $R^{(t-1)}$.

Theorem 2.2.1 (Cauchon [5], Lemme 2.1 and Théorème 3.2.1)**.**

(1) *The multiplicative set generated by $x_{r,s}$ is a left and right Ore set for $R^{(t)}$, and the multiplicative set generated by $y_{r,s}$ is a left and right Ore set for $R^{(t-1)}$.*

(2) *There is an injective homomorphism*

$$\overrightarrow{\cdot} : R^{(t-1)} \to R^{(t)}\left[x_{r,s}^{-1}\right]$$

defined on the standard generators by

$$\overrightarrow{y_{i,j}} = \begin{cases} x_{i,j} - x_{i,s}x_{r,s}^{-1}x_{r,j}, & \text{if } i < r \text{ and } j < s; \\ x_{i,j} & \text{otherwise.} \end{cases}$$

(3) *There is an injective homomorphism*

$$\overleftarrow{\cdot} : R^{(t)} \to R^{(t-1)}\left[y_{r,s}^{-1}\right]$$

defined on the standard generators by

$$\overleftarrow{x_{i,j}} = \begin{cases} y_{i,j} + y_{i,s}y_{r,s}^{-1}y_{r,j}, & \text{if } i < r \text{ and } j < s; \\ y_{i,j} & \text{otherwise.} \end{cases}$$

(4) $R^{(t)}\left[x_{r,s}^{-1}\right] = R^{(t-1)}\left[y_{r,s}^{-1}\right]$. □

The homomorphism in Theorem 2.2.1 (2) is called the *deleting derivations map.* We call the homomorphism in Theorem 2.2.1 (3) the *adding derivations map.* (This map is called the "reverse deleting derivations map" in [15], and a step of the "restoration" algorithm in [9].)

The strategy of Cauchon's theory is to use these maps to iteratively transfer information between $R^{(1)} = \mathcal{O}_q(\mathbb{K}^{m\times n})$ and $R^{(mn)} = \mathcal{O}_q(\mathcal{M}_{m,n}(\mathbb{K}))$. For example, to embed the prime spectrum of the latter algebra into the prime spectrum of the former.

As usual, for an algebra A, denote by $\operatorname{Spec}(A)$ the set of prime ideals, equipped with the Zariski topology. We may partition $\operatorname{Spec}(R^{(t)})$ as

$$\operatorname{Spec}(R^{(t)}) = \operatorname{Spec}^{\notin}(R^{(t)}) \cup \operatorname{Spec}^{\in}(R^{(t)}),$$

where

$$\operatorname{Spec}^{\notin}(R^{(t)}) = \{P \in \operatorname{Spec}(R^{(t)}) \mid x_{r,s} \notin P\},$$

and

$$\mathrm{Spec}^{\in}(R^{(t)}) = \{P \in \mathrm{Spec}(R^{(t)}) \mid x_{r,s} \in P\}.$$

Theorem 2.2.2 (Cauchon [6], Section 3.1)**.** *There exists an injective map*

$$\phi_t : \mathrm{Spec}(R^{(t)}) \to \mathrm{Spec}(R^{(t-1)})$$

satisfying the following properties.

(1) *Restricted to* $\mathrm{Spec}^{\notin}(R^{(t)})$*,* ϕ_t *is bijective, sending* $P \in \mathrm{Spec}^{\notin}(R^{(t)})$ *to*

$$\phi_t(P) = \overleftarrow{P}[y_{r,s}^{-1}] \cap R^{(t-1)}.$$

If $Q \in \mathrm{Spec}^{\notin}(R^{(t-1)})$*, then*

$$\phi_t^{-1}(Q) = \overrightarrow{Q}[x_{r,s}^{-1}] \cap R^{(t)}.$$

(2) *Restricted to* $\mathrm{Spec}^{\in}(R^{(t)})$*,* ϕ_t *is injective, sending* $P \in \mathrm{Spec}^{\in}(R^{(t)})$ *to*

$$\phi_t(P) = g^{-1}(P/\langle x_{r,s}\rangle),$$

where $g : R^{(t-1)} \to R^{(t)}/\langle x_{r,s}\rangle$ *is the unique homomorphism that maps the standard generators as* $y_{i,j} \mapsto x_{i,j} + \langle x_{r,s}\rangle$*.* □

2.3. **$\mathcal{H}$-Stratification.** For many quantum algebras, including the $R^{(t)}$, the structure of the prime spectrum may be understood by first understanding the prime ideals that are invariant under a rational action of an algebraic torus $\mathcal{H}$. For $R^{(t)}$ with matrix of generators $[x_{i,j}]$, let $\mathcal{H} = (\mathbb{K}^*)^{m+n}$ and note that every $h = (\rho_1, \ldots, \rho_m, \gamma_1, \ldots, \gamma_n) \in \mathcal{H}$ induces an automorphism of $R^{(t)}$ by

$$h \cdot x_{i,j} = \rho_i \gamma_j x_{i,j}.$$

Definition 2.3.1. An *$\mathcal{H}$-prime* is a prime ideal $K \in \mathrm{Spec}(R^{(t)})$ such that $h \cdot K = K$ for all $h \in \mathcal{H}$. The set of all $\mathcal{H}$-primes of $R^{(t)}$ is denoted $\mathcal{H}$-$\mathrm{Spec}(R^{(t)})$. The *$\mathcal{H}$-stratum* associated to an $\mathcal{H}$-prime K is the set

$$\mathrm{Spec}_K(R^{(t)}) = \{P \in \mathrm{Spec}(R^{(t)}) \mid \bigcap_{h \in \mathcal{H}} h \cdot P = K\}.$$

Theorem 2.3.2 (Goodearl-Letzter [13] (or see [2], Part II))**.** *For every* $t \in [mn]$*, there are finitely many* $\mathcal{H}$*-primes in* $\mathcal{H}$-$\mathrm{Spec}(R^{(t)})$*, and*

$$\mathrm{Spec}(R^{(t)}) = \bigsqcup_{K \in \mathcal{H}\text{-}\mathrm{Spec}(R^{(t)})} \mathrm{Spec}_K(R^{(t)}).$$

□

Remark 2.3.3. Theorem 2.2.1 and Theorem 2.3.2 are where it is necessary to require q to be a nonzero, non-root of unity. We also note here that the $\mathcal{H}$-primes are well-known to be homogeneous ideals.

The $\mathcal{H}$-primes of $R^{(1)} = \mathcal{O}_q(\mathbb{K}^{m \times n})$ have generating sets of a simple form.

Theorem 2.3.4 (Goodearl-Letzter [12], Section 2.1(ii))**.** *A prime ideal* $K \in \mathrm{Spec}(R^{(1)})$ *is an* $\mathcal{H}$*-prime if and only if there exists a* $B \subseteq [m] \times [n]$ *such that*

$$K = \langle t_{i,j} \mid (i,j) \in B \rangle.$$

□

It is convenient to describe these $\mathcal{H}$-primes by using diagrams.

Definition 2.3.5. An $m \times n$ *diagram* is an $m \times n$ grid of squares, each square colored either black or white.

We index the squares of a diagram as one would the entries of an $m \times n$ matrix. If

$$K = \langle t_{i,j} \mid (i,j) \in B \rangle \in \mathcal{H}\text{-Spec}(R^{(1)})$$

for some $B \subseteq [m] \times [n]$, then the diagram corresponding to K as that in which the black squares are precisely those $(i,j) \in B$. Conversely, any diagram defines a subset $B \subseteq [m] \times [n]$ corresponding to the indices of the black squares, and therefore a corresponding $K \in \mathcal{H}\text{-Spec}(R^{(1)})$. We henceforth identify a diagram with the corresponding subset $B \subseteq [m] \times [n]$. Figure 1 presents two diagrams, the left one corresponding to the $\mathcal{H}$-prime $\langle t_{1,1}, t_{2,1}, t_{2,3} \rangle \in \mathcal{H}\text{-Spec}(\mathcal{O}_q(\mathbb{K}^{3\times 4}))$..

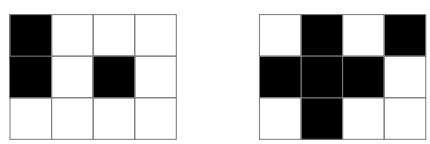

FIGURE 1. Two 3×4 diagrams.

The deleting derivations map behaves nicely with respect to $\mathcal{H}$-primes.

Theorem 2.3.6 (Cauchon [6], Section 3.1)**.** *For every* $t \in [mn]$, $t \neq 1$, *the map* ϕ_t *injects* $\mathcal{H}\text{-Spec}(R^{(t)})$ *into* $\mathcal{H}\text{-Spec}(R^{(t-1)})$. *Consequently, the composition*

$$\phi = \phi_2 \circ \cdots \phi_{mn}$$

is an injection of $\mathcal{H}\text{-Spec}(\mathcal{O}_q(\mathcal{M}_{m,n}(\mathbb{K})))$ *into* $\mathcal{H}\text{-Spec}(\mathcal{O}_q(\mathbb{K}^{m\times n}))$. □

In view of the strategy mentioned in Section 2.2, a natural problem is to identify the diagrams of those $\mathcal{H}$-primes in $\mathcal{H}\text{-Spec}(R^{(1)})$ that are the image of an $\mathcal{H}$-prime in $\mathcal{H}\text{-Spec}(R^{(mn)})$ under ϕ. We call these *Cauchon diagrams*

Definition 2.3.7. A diagram is a Cauchon diagram if, for any given black square, either every square to the left or every square above is also black.

The right diagram in Figure 1 is an example of a Cauchon diagram, while the left is not a Cauchon diagram since the black square in position $(2,3)$ has a white square both above and to its left.

Theorem 2.3.8 (Cauchon [6], Theéorème 3.2.2)**.** *A diagram is a Cauchon diagram if and only if the corresponding $\mathcal{H}$-prime in $\mathcal{H}$-Spec$(R^{(1)})$ is the image under ϕ of an $\mathcal{H}$-prime in $\mathcal{H}$-Spec$(R^{(mn)})$.* □

3. Quantum Matrices by paths

3.1. **Graphs and Paths.** Let B be a Cauchon diagram and, by Theorem 2.3.8, consider the corresponding $\mathcal{H}$-prime K of $\mathcal{O}_q(\mathcal{M}_{m,n}(\mathbb{K}))$. With the notation of Section 2.3, the image of K under the composition $\phi_{t+1} \circ \cdots \circ \phi_{mn}$ is an $\mathcal{H}$-prime K_t of $R^{(t)}$. The goal of this section is to explain how $R^{(t)}/K_t$ is isomorphic to a subalgebra $A_B^{(t)}$ of the quantum torus $\mathcal{O}_q((\mathbb{K}^\times)^{m\times n})$ defined by considering paths in a directed graph that is defined using B. In particular, when $B = \emptyset$, we obtain a combinatorial description of $\mathcal{O}_q(\mathcal{M}_{m,n}(\mathbb{K}))$.

Definition 3.1.1. To a Cauchon diagram B construct a directed graph $G_B^{m\times n}$ called the *Cauchon graph*[1] as follows. The vertex set consists of *white vertices*

$$W = ([m] \times [n]) \setminus B,$$

together with *row vertices* $R = [m]$, and *column vertices*[2] $C = [n]$. The set of directed edges E consists precisely of those in the following list.

(1) If $(i,j),(i,j') \in W$ are distinct white vertices with $j > j'$ and such that there is no white vertex (i,j'') for any $j' < j'' < j$, then we make an edge from (i,j) to (i,j');
(2) If $(i,j),(i',j) \in W$ are distinct white vertices with $i < i'$ such that there is no white vertex (i'',j) for any $i < i'' < i'$, then we make an edge from (i,j) to (i',j);
(3) For $i \in R$, we make an edge from i to (i,j), where j is the largest integer such that $(i,j) \in W$ (if such a j exists);
(4) For $j \in C$, we make an edge from (i,j) to j where i is the largest integer such that $(i,j) \in W$ (if such an i exists).

Note 3.1.2. There is a natural way to embed a Cauchon graph in the plane by placing it "on top" of the Cauchon diagram B as follows. The white vertices are placed at the center of the corresponding white squares, the row vertices to the right of the corresponding diagram row, and the column vertices underneath the corresponding diagram column. An example is illustrated in Figure 2. We call this the *standard embedding* and always assume a given Cauchon graph is equipped with it. Hence, without confusion we can refer to aspects of a Cauchon graph using common directional or

[1] "Cauchon graphs" already appear in [19] where they are called Γ-graphs. We here call these Cauchon graphs to be consistent with the Cauchon diagrams from which they derive.

[2] There is ambiguity between labels of the row and column vertices, but the type of vertex we mean will always be explicitly stated.

geometric terms[3] That a diagram is a Cauchon diagram easily implies that the corresponding Cauchon graph has the following important property.

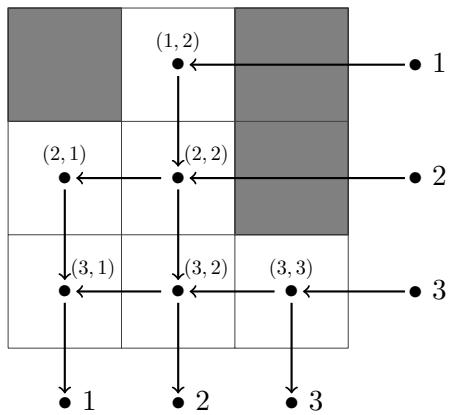

FIGURE 2. The graph $G_B^{3\times 3}$, embedded on top of the 3×3 Cauchon diagram $B = \{(1,1),(1,3),(2,3)\}$.

Proposition 3.1.3. *The standard embedding of a Cauchon graph is planar.* □

Definition 3.1.4. A *path* in $G_B^{m\times n}$ is a sequence $P = (v_0, v_1, \ldots, v_k)$ of distinct vertices such that[4] for all $i \in [k]$, there exists an edge in $G_B^{m\times n}$ directed from v_{i-1} to v_i. Naturally, we say that P *starts* at v_0 and *ends* at v_k and write $P\colon v_0 \to v_k$.

We consider a directed edge e from v to w to be a path and write $e\colon v \to w$. If e is the edge between two consecutive vertices in a path P, then we abuse notation by writing $e \in P$. Finally, if $P\colon u \to v$, $Q\colon v \to w$, then we write $P \cup Q$ to denote the concatenation of P and Q. To a path in a Cauchon graph we will assign an element of the quantum torus as follows.

Definition 3.1.5. Let $G_B^{m\times n}$ be a Cauchon graph. Define the function

$$w\colon E \to \mathcal{O}_q((\mathbb{K}^\times)^{m\times n})$$

as follows, where the numbering and notation correspond to the edge types of Definition 3.1.1:

(1) $w(e\colon (i,j) \to (i,j')) = t_{i,j}^{-1} t_{i,j'}$;
(2) $w(e\colon (i,j) \to (i',j)) = 1$;
(3) $w(e\colon i \to (i,j)) = t_{i,j}$;
(4) $w(e\colon (i,j) \to j) = 1$.

[3]For example, horizontal, vertical, above, below, northwest, etc.

[4]strictly speaking, we are defining a *directed* path, but we will never have use for non-directed paths in this paper.

The image $w(e)$ of an edge e is called the *weight* of e.

If $P = (v_0, v_1, \dots v_k)$ is a path, and $e_i \colon v_{i-1} \to v_i$, then the weight of P is defined to be

$$w(P) = w(e_1)w(e_2)\cdots w(e_k).$$

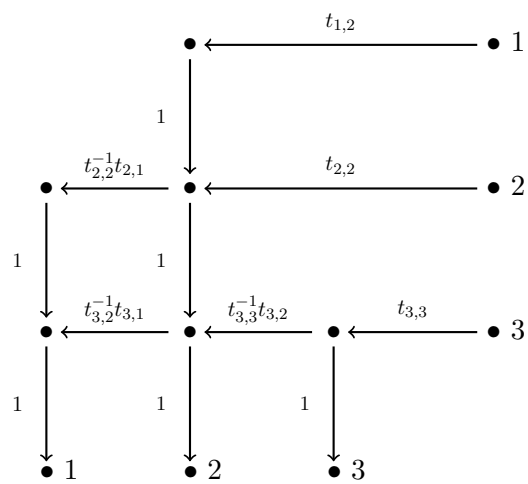

FIGURE 3. The graph $G_B^{3\times 3}$, with $B = \{(1,1),(1,3),(2,3)\}$, and edges labeled by their weights. (Labels of white vertices omitted.)

Example 3.1.6. Figure 3 illustrates the graph of Figure 2 with edges labeled by their weights. The weight of the path

$$P = (1, (1,2), (2,2), (2,1), (3,1), 1)$$

is

$$\begin{aligned} w(P) &= (t_{1,2})(1)(t_{2,2}^{-1}t_{2,1})(1)(1) \\ &= t_{1,2}t_{2,2}^{-1}t_{2,1}. \end{aligned}$$

It is convenient to observe that for a row vertex i and a column vertex j, the weight of a path $P \colon i \to j$ can be computed by looking at the sequence of "turns".

Definition 3.1.7. Let $P = (v_0, v_1, \dots, v_{k-1}, v_k)$ be a path in a Cauchon graph starting from row vertex $i = v_0$ and ending at column vertex $j = v_k$.

- A Γ-*turn* in P is a white vertex $v_i \in P$ such that the edge from v_{i-1} to v_i is horizontal, and the edge from v_i to v_{i+1} is vertical.
- A $\lrcorner$-*turn* in P is a white vertex $v_i \in P$ such that the edge from v_{i-1} to v_i is vertical and the edge from v_i to v_{i+1} is horizontal.

The next proposition follows easily using the definitions of edge and path weights.

Proposition 3.1.8. *Let $P\colon i \to j$ be a path in a Cauchon graph where i is a row vertex and j is a column vertex. If $(v_{i_1}, v_{i_2}, \dots, v_{i_t}) \subset P$ is the subsequence consisting of all Γ-turns and $\lrcorner$-turns, then*

$$w(P) = t_{v_{i_1}} t_{v_{i_2}}^{-1} t_{v_{i_3}} \cdots t_{v_{i_{t-1}}}^{-1} t_{v_{i_t}}.$$

Example 3.1.9. For the path P in Example 3.1.6, the vertex $(1,2)$ is a Γ-turn, $(2,2)$ is a $\lrcorner$-turn, and $(2,1)$ is a Γ-turn, so that $w(P) = (t_{1,2})(t_{2,2}^{-1})(t_{2,1})$. This, of course, agrees with Example 3.1.6.

Parts 1 and 2 of the next result are Lemmas 3.5 and 3.6 respectively in [4]. Part 3 is proven similarly.

Lemma 3.1.10. *In a Cauchon graph $G_B^{m\times n}$, let (a,b) be a white vertex, i and k row vertices with $i<k$, and j and ℓ column vertices with $j<\ell$.*

(1) *If $P\colon i \to (a,b)$ and $Q\colon (a,b) \to \ell$ are paths in $G_B^{m\times n}$ with only (a,b) in common, then*

$$w(P)w(Q) = \begin{cases} w(Q)w(P), & \text{if } b=\ell, \text{ i.e., } Q \text{ has only vertical edges,} \\ q^{-1}w(Q)w(P), & \text{otherwise.} \end{cases}$$

(2) *If $P\colon (a,b) \to j$ and $Q\colon (a,b) \to \ell$ are paths in $G_B^{m\times n}$ with only (a,b) in common, then*

$$w(P)w(Q) = \begin{cases} w(Q)w(P), & \text{if } b=\ell, \text{ i.e., } Q \text{ has only vertical edges,} \\ qw(Q)w(P), & \text{otherwise.} \end{cases}$$

(3) *If $P\colon i \to (a,b)$ and $Q\colon k \to (a,b)$ are paths in $G_B^{m\times n}$ with only (a,b) in common, then*

$$w(P)w(Q) = qw(Q)w(P).$$

For the remainder of this section, fix $t \in [mn]$ and let (r,s) be the tth smallest coordinate.

Notation 3.1.11. For a row vertex i and a column vertex j of $G_B^{m\times n}$, let $\Gamma_B^{(t)}(i,j)$ denote the set of all paths $P\colon i \to j$ in $G_B^{m\times n}$ for which no vertex larger than (r,s) is a $\lrcorner$-turn.

Figure 4 is meant to clarify Notation 3.1.11, and while we have drawn a vertex (r,s) in this figure, it will not exist if $(r,s) \in B$. The main theorem of this section is the following.

Theorem 3.1.12. *Let $G_B^{m\times n}$ be a Cauchon graph, let i,k be row vertices with $i<k$, and let j,ℓ be column vertices.*

(1) *If $j<\ell$, then there exists a permutation of $\Gamma_B^{(t)}(i,j) \times \Gamma_B^{(t)}(i,\ell)$ sending $(P,Q) \mapsto (\tilde{P},\tilde{Q})$ where*

$$w(P)w(Q) = qw(\tilde{Q})w(\tilde{P}).$$

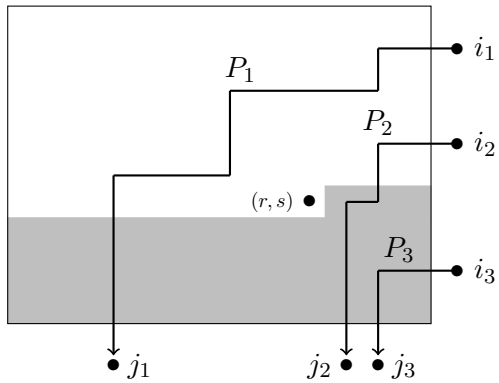

FIGURE 4. The shaded area represents all white vertices greater than the tth smallest coordinate (r,s). (This convention will be repeated in later illustrations.) In this example, $P_1 \in \Gamma_B^{(t)}(i_1,j_1)$, $P_3 \in \Gamma_B^{(t)}(i_3,j_3)$ but $P_2 \notin \Gamma_B^{(t)}(i_2,j_2)$.

(2) *If $j = \ell$, then there exists a permutation of $\Gamma_B^{(t)}(i,j) \times \Gamma_B^{(t)}(k,j)$ sending $(P,Q) \mapsto (\tilde{P},\tilde{Q})$ where*

$$w(P)w(Q) = qw(\tilde{Q})w(\tilde{P}).$$

(3) *If $j > \ell$, then there exists a permutation of $\Gamma_B^{(t)}(i,j) \times \Gamma_B^{(t)}(k,\ell)$ sending $(P,Q) \mapsto (\tilde{P},\tilde{Q})$ where*

$$w(P)w(Q) = w(\tilde{Q})w(\tilde{P}).$$

(4) *If $j < \ell$, then:*
   (a) *If $P \in \Gamma_B^{(t)}(i,j)$, $Q \in \Gamma_B^{(t)}(k,\ell)$ and $P \cap Q = \emptyset$, then*

$$w(P)w(Q) = w(Q)w(P);$$

   (b) *There exists a bijective function from the subset of $\Gamma_B^{(t)}(i,j) \times \Gamma_B^{(t)}(k,\ell)$ consisting of those (P,Q) with $P \cap Q \neq \emptyset$, to $\Gamma_B^{(t)}(i,\ell) \times \Gamma_B^{(t)}(k,j)$ sending (P,Q) to $(\tilde{P},\tilde{Q})$ where*

$$w(P)w(Q) = qw(\tilde{Q})w(\tilde{P}).$$

Proof. Part 1: Let $(P,Q) \in \Gamma_B^{(t)}(i,j) \times \Gamma_B^{(t)}(i,\ell)$. Since $j < \ell$, P and Q have a last (white) vertex in common, say (a,b). See Figure 5. Therefore, we may write $P = P_1 \cup P_2$ where $P_1 \colon i \to (a,b)$ and $P_2 \colon (a,b) \to j$, and $Q = Q_1 \cup Q_2$ where $Q_1 \colon k \to (a,b)$ and $Q_2 \colon (a,b) \to \ell$. Define $\tilde{P} = Q_1 \cup P_2$ and $\tilde{Q} = P_1 \cup Q_2$. We have $(\tilde{P},\tilde{Q}) \in \Gamma_B^{(t)}(i,j) \times \Gamma_B^{(t)}(i,\ell)$ and that $\tilde{\tilde{P}} = P$ and $\tilde{\tilde{Q}} = Q$, i.e., the map $(P,Q) \mapsto (\tilde{P},\tilde{Q})$ is an involution and so a permutation.

Finally, we apply Lemma 3.1.10 to make our final conclusion as follows. If Q_2 has only vertical edges, then

$$\begin{aligned} w(P)w(Q) &= w(P_1)w(P_2)w(Q_1)w(Q_2) \\ &= qw(P_1)w(Q_1)w(P_2)w(Q_2) \text{ (Lemma 3.1.10 (1))}, \\ &= qw(P_1)w(Q_2)w(Q_1)w(P_2) \text{ (Lemma 3.1.10 (1) \& (3))} \\ &= qw(\tilde{Q})w(\tilde{P}). \end{aligned}$$

If Q_2 has a horizontal edge, then

$$\begin{aligned} w(P)w(Q) &= w(P_1)w(P_2)w(Q_1)w(Q_2) \\ &= q^{-1}qw(P_1)w(Q_2)w(P_2)w(Q_1) \text{ (Lemma 3.1.10 (1))} \\ &= qw(P_1)w(Q_2)w(Q_1)w(P_2) \text{ (Lemma 3.1.10 (1) \& (3))} \\ &= qw(\tilde{Q})w(\tilde{P}). \end{aligned}$$

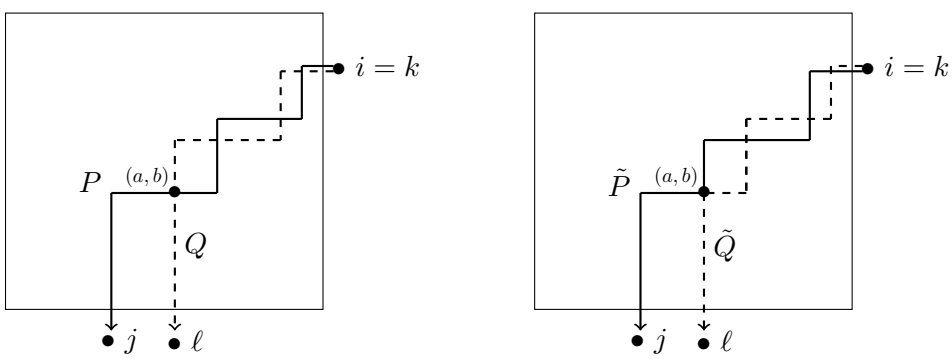

FIGURE 5. Illustration of Part 1 in the proof of Theorem 3.1.12. The left figure shows paths P (solid) and Q (dashed). Right figure shows paths $\tilde{P}$ (solid) and $\tilde{Q}$ (dashed).

Part 2: Let $(P,Q) \in \Gamma_B^{(t)}(i,j) \times \Gamma_B^{(t)}(k,j)$. In this case, P and Q have a first common vertex, say (a,b). Therefore, we may write $P = P_1 \cup P_2$ where $P_1 \colon i \to (a,b)$ and $P_2 \colon (a,b) \to j$, and $Q = Q_1 \cup Q_2$ where $Q_1 \colon k \to (a,b)$ and $Q_2 \colon (a,b) \to \ell$. Define $\tilde{P} = P_1 \cup Q_2$ and $\tilde{Q} = Q_1 \cup P_2$. We again have $(\tilde{P},\tilde{Q}) \in \Gamma_B^{(t)}(i,j) \times \Gamma_B^{(t)}(k,j)$ and that the map $(P,Q) \mapsto (\tilde{P},\tilde{Q})$ is a permutation. The remainder of the proof for Part 2 proceeds as in Part 1 and by using Lemma 3.1.10, Parts 1 and 2.

Part 3: Let $(P,Q) \in \Gamma_B^{(t)}(i,j) \times \Gamma_B^{(t)}(k,\ell)$ where $i < k$ and $j > \ell$. In this case, P and Q have a first common vertex (a,b) and a last common vertex (a',b'). We can write $P = P_1 \cup P_2 \cup P_3$ where $P_1 \colon i \to (a,b)$, $P_2 \colon (a,b) \to (a',b')$ and $P_3 \colon (a',b') \to j$. Similarly $Q = Q_1 \cup Q_2 \cup Q_3$ where $Q_1 \colon k \to (a,b)$, $Q_2 \colon (a,b) \to (a',b')$ and $Q_3 \colon (a',b') \to \ell$. Define $\tilde{P} = P_1 \cup Q_2 \cup P_3$ and $\tilde{Q} = Q_1 \cup P_2 \cup Q_3$.

We again have $(\tilde{P},\tilde{Q}) \in \Gamma_B^{(t)}(i,j) \times \Gamma_B^{(t)}(k,\ell)$ and that the map $(P,Q) \mapsto (\tilde{P},\tilde{Q})$ is a permutation. To prove the final conclusion concerning the weights relation, we must consider several possibilities according to whether or not any of P_2, P_3 and Q_2 consists only of vertical edges, or no edges at all (the other paths here always have a horizontal edge). We here only discuss the case that P_2, P_3 and Q_2 each have a horizontal edge, the other possibilities being dealt with similarly. Before we begin, we should mention that, strictly speaking, P_2 and Q_2 do not begin nor end at a row or column vertex, and so Lemma 3.1.10 does not directly apply. In order to use the lemma, we identify P_2 and Q_2 respectively with the paths obtained by adding the vertical path from (a',b') to b' and the horizontal path from a to (a,b). We can do this since In either case, these latter paths have the same weight as $w(P_2)$ or $w(P_3)$ respectively, by Proposition 3.1.8.

We have

$$\begin{aligned}
w(P)w(Q) &= w(P_1)w(P_2)w(P_3)w(Q_1)w(Q_2)w(Q_3)\\
&= qw(P_1)w(P_2)w(Q_1)w(Q_2)w(P_3)w(Q_3) \text{ (Lemma 3.1.10 (1))}\\
&= w(P_1)w(P_2)w(Q_1)w(Q_2)w(Q_3)w(P_3) \text{ (Lemma 3.1.10 (2))}\\
&= q^{-1}w(P_1)w(P_2)w(Q_1)w(Q_3)w(Q_2)w(P_3) \text{ (Lemma 3.1.10 (1))}\\
&= w(P_1)w(Q_1)w(P_2)w(Q_3)w(Q_2)w(P_3) \text{ (Lemma 3.1.10 (1))}\\
&= w(Q_1)w(P_2)w(P_1)w(Q_3)w(Q_2)w(P_3) \text{ (Lemma 3.1.10 (3) \& (1))},
\end{aligned}$$

where the second line is applying the cited lemma to P_2 and $Q_1 \cup Q_2$. That the last line is equal to $w(\tilde{Q})w(\tilde{P})$ is now implied by the fact that $w(P_1)$ and $w(Q_3)$ commute. Indeed, we have

$$\begin{aligned}
w(P_1)w(Q_3) &= w(P_1)w(Q_2)^{-1}w(Q_2)w(Q_3)\\
&= qw(Q_2)^{-1}w(P_1)w(Q_2)w(Q_3) \text{ (Lemma 3.1.10 (1))}\\
&= w(Q_2)^{-1}w(Q_2)w(Q_3)w(P_1) \text{ (Lemma 3.1.10 (1))}\\
&= w(Q_3)w(P_1),
\end{aligned}$$

where the third line is applying the cited lemma to P_3 and $Q_2 \cup Q_3$.

Part 4a: Lemma 3.4 in [4] shows that the weight of any edge not sharing a vertex with Q commutes with $w(Q)$. Since this is the case for all edges of P we immediately have $w(P)w(Q) = w(Q)w(P)$.

Part 4b: As in Part 1, we let (a,b) be the last common vertex in a non-disjoint pair of paths $(P,Q) \in \Gamma_B^{(t)}(i,j) \times \Gamma_B^{(t)}(k,\ell)$. We then "switch" the tails of P and Q at (a,b) to obtain a $\tilde{P}\colon i \to \ell$ and a $\tilde{Q}\colon k \to j$. The remainder of the proof is as in Part 1.

□

3.2. **The Algebras $A_B^{(t)}$.** In this section we introduce, for each $t \in [mn]$ and Cauchon diagram B, a subalgebra $A_B^{(t)}$ of $\mathcal{O}_q((\mathbb{K}^\times)^{m\times n})$. When $B = \emptyset$,

we will see that $A_{\emptyset}^{(t)} \simeq R^{(t)}$. Throughout this section we fix $t \in [mn]$ and let (r, s) be the tth smallest coordinate.

Definition 3.2.1. We define $A_B^{(t)}$ to be the subalgebra of $\mathcal{O}_q((\mathbb{K}^\times)^{m\times n})$ with the $m \times n$ matrix of generators $[x_{i,j}]$ where, for each coordinate (i, j),

$$x_{i,j} = \sum_{P\in\Gamma_B^{(t)}(i,j)} w(P).$$

When $B = \emptyset$ we write $A^{(t)} = A_{\emptyset}^{(t)}$.

Example 3.2.2. Consider the 2×3 Cauchon diagram $B = \{(1, 1)\}$. Figure 6 presents two copies of the corresponding Cauchon graph, where we continue our illustrative convention that no path may contain a ⅃-turn in the shaded region. For each $t \in [6]$, we denote by $[x_{i,j}^{(t)}]$ the matrix of generators for $A_B^{(t)}$.

The left graph of Figure 6 corresponds to $t = 1$. In this case, any path from row vertex 1 to column vertex 1 necessarily contains a ⅃-turn in the shaded region. Therefore, $A_B^{(1)}$ has the matrix of generators

$$\begin{bmatrix} x_{1,1}^{(1)} & x_{1,2}^{(1)} & x_{1,3}^{(1)} \\ x_{2,1}^{(1)} & x_{2,2}^{(1)} & x_{2,3}^{(1)} \end{bmatrix} = \begin{bmatrix} 0 & t_{1,2} & t_{1,3} \\ t_{2,1} & t_{2,2} & t_{2,3} \end{bmatrix}.$$

One may check that $A_B^{(1)} = A_B^{(2)} = A_B^{(3)} = A_B^{(4)}$. For $t = 5$, the Cauchon graph is illustrated on the right in Figure 6. In this case, there exists a unique path in $\Gamma_B^{(5)}(1, 1)$, so that the matrix of generators for $A_B^{(5)}$ is

$$\begin{bmatrix} x_{1,1}^{(5)} & x_{1,2}^{(5)} & x_{1,3}^{(5)} \\ x_{2,1}^{(5)} & x_{2,2}^{(5)} & x_{2,3}^{(5)} \end{bmatrix} = \begin{bmatrix} t_{1,2}t_{2,2}^{-1}t_{2,1} & t_{1,2} & t_{1,3} \\ t_{2,1} & t_{2,2} & t_{2,3} \end{bmatrix}.$$

Finally, one may check that $A_B^{(6)}$ has matrix of generators

$$\begin{bmatrix} x_{1,1}^{(6)} & x_{1,2}^{(6)} & x_{1,3}^{(6)} \\ x_{2,1}^{(6)} & x_{2,2}^{(6)} & x_{2,3}^{(6)} \end{bmatrix} = \begin{bmatrix} t_{1,2}t_{2,2}^{-1}t_{2,1} + t_{1,3}t_{2,3}^{-1}t_{2,1} & t_{1,2} + t_{1,3}t_{2,3}^{-1}t_{2,2} & t_{1,3} \\ t_{2,1} & t_{2,2} & t_{2,3} \end{bmatrix}.$$

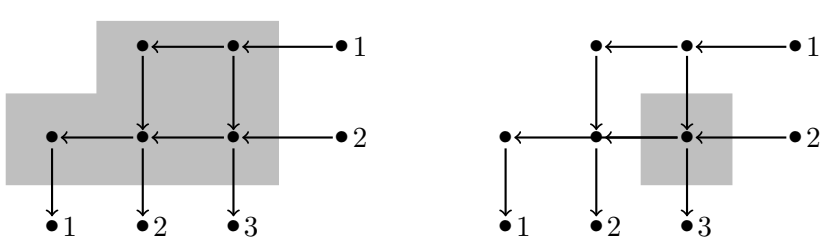

FIGURE 6. Two copies of the graph $G_{\{(1,1)\}}^{2\times 3}$ referred to in Example 3.2.2. The left picture is shaded to assist the definition of $A_B^{(1)}$, the right picture for $A_B^{(5)}$.

Theorem 3.1.12 implies some commutation relations between the generators of $A_B^{(t)}$.

Theorem 3.2.3 (cf. Definition 2.1.3)**.** *If $X = [x_{i,j}]$ is the matrix of generators for $A_B^{(t)}$, and*

$$\begin{bmatrix} a & b \\ c & d \end{bmatrix}$$

is any 2×2 submatrix of X, then:

(1) $ab = qba$, $cd = qdc$;
(2) $ac = qca$, $bd = qdb$;
(3) $bc = cb$;
(4) $ad = \begin{cases} da, & \text{if } d = x_{k,\ell} \text{ and } (k,\ell) > (r,s); \\ da + (q - q^{-1})bc, & \text{if } d = x_{k,\ell} \text{ and } (k,\ell) \leq (r,s). \end{cases}$

Proof. First note that for any coordinates (i,j) and (i',j'),

$$\begin{aligned} x_{i,j}x_{i',j'} &= \sum_{\substack{P \in \Gamma_B^{(t)}(i,j), \\ Q \in \Gamma_B^{(t)}(i',j')}} w(P)w(Q) \\ &= \sum_{\substack{P,Q: \\ P \cap Q = \emptyset}} w(P)w(Q) + \sum_{\substack{P,Q: \\ P \cap Q \neq \emptyset}} w(P)w(Q). \end{aligned} \tag{1}$$

Let

$$\begin{bmatrix} a & b \\ c & d \end{bmatrix} = \begin{bmatrix} x_{i,j} & x_{i,\ell} \\ x_{k,j} & x_{k,\ell} \end{bmatrix}$$

be a 2×2 submatrix of X.

First, consider $x_{i,j}$ and $x_{i,\ell}$. In this case the first sum in Equation (1) is necessarily empty, since any pair $(P,Q) \in \Gamma_B^{(t)}(i,j) \times \Gamma_B^{(t)}(i,\ell)$ have row vertex i in common. Part 1 of Theorem 3.1.12 shows that for any such pair, there is a unique pair $(\tilde{P}, \tilde{Q}) \in \Gamma_B^{(t)}(i,j) \times \Gamma_B^{(t)}(i,\ell)$ such that $w(P)w(Q) = qw(\tilde{Q})w(\tilde{P})$. Hence, Equation (1) implies $x_{i,j}x_{i,\ell} = qx_{i,\ell}x_{i,j}$ The relations between: $x_{k,j}$ and $x_{k,\ell}$; $x_{i,j}$ and $x_{k,j}$; $x_{i,\ell}$ and $x_{k,\ell}$; and $x_{i,j}$ and $x_{k,j}$ are all obtained similarly.

Now consider $x_{i,j}$ and $x_{k,\ell}$. If $(r,s) < (k,\ell)$, then

$$\Gamma_B^{(t)}(k,\ell) = \{Q = (k,(k,\ell),\ell)\}$$

and any $P \in \Gamma_B^{(t)}(i,j)$ is disjoint from Q by definition of $\Gamma_B^{(t)}(i,j)$. Hence $x_{i,j}x_{k,\ell} = x_{k,\ell}x_{i,j}$ by Part 4a of Theorem 3.1.12. If $(k,\ell) \leq (r,s)$, then by Equation (1) and Part 4b of Theorem 3.1.12, we obtain

$$x_{i,j}x_{k,\ell} = qx_{i,\ell}x_{k,j} + \sum_{\substack{P \in \Gamma_B^{(t)}(i,j),\, Q \in \Gamma_B^{(t)}(i,j): \\ P \cap Q = \emptyset}} w(P)w(Q).$$

Since the weights of disjoint paths commute by Part 4a of Theorem 3.1.12, it follows that $x_{i,j}x_{k,\ell} - x_{k,\ell}x_{i,j} = (q - q^{-1})x_{i,\ell}x_{k,j}$.

□

The intuition behind these algebras is that one obtains $A_B^{(t)}$ from $A_B^{(t-1)}$ by "allowing more paths." To be more precise, let $[x_{i,j}]$ be the matrix of generators for $A_B^{(t)}$, and $[y_{i,j}]$ that of $A_B^{(t-1)}$. As elements of $\mathcal{O}_q((\mathbb{K}^\times)^{m\times n})$ we have

$$x_{i,j} = y_{i,j} + \sum w(P), \tag{2}$$

where the sum is over all paths $P\colon i \to j$ for which (r,s) is a ⅃-turn in P. If $i \geq r$, $j \geq s$, or $(r,s) \in B$, then no such P exists and

$$x_{i,j} = y_{i,j}.$$

On the other hand, if $(r,s) \notin B$ and both $i < r$ and $j < s$, suppose $P\colon i \to j$ is a path with a ⅃-turn at (r,s). Consider $w(P)w(Q)$, where $Q = (r,(r,s),s)$. As in the proof of Theorem 3.1.12, we may form paths $\tilde{P}\colon i \to s$ and $\tilde{Q}\colon r \to j$ by "switching tails" at (r,s). Since $w(P)w(Q) = qw(\tilde{Q})w(\tilde{P})$, multiplying Equation (2) through by $y_{r,s} = x_{r,s} = w(Q)$ gives

$$\begin{aligned} x_{i,j}x_{r,s} &= y_{i,j}y_{r,s} + \sum w(P)y_{r,s} \\ &= y_{i,j}y_{r,s} + qy_{i,s}y_{r,j}. \end{aligned}$$

One may easily check that $t_{r,s} = x_{r,s} = y_{r,s}$ generates a left and right Ore set for $A_B^{(t)}$ and $A_B^{(t-1)}$. (For $x_{r,s}$, this follows from the observation that $x_{i,j}x_{r,s}^{m+1} = x_{r,s}^m a$ for some $a \in A_B^{(t)}$ when $x_{i,j} \neq 0$ and (i,j) is northwest of (r,s).) Hence, we have just proved Parts 1 and 2 of the following result. Part 3 follows from these, and Part 4 is trivial.

Theorem 3.2.4 (cf. Proposition 5.4.2 in [5])**.** *The following hold.*

(1) *If $(r,s) \notin B$, then $A_B^{(t-1)}$ is a subalgebra of*

$$A_B^{(t)}[x_{r,s}^{-1}]$$

where

$$y_{i,j} = \begin{cases} x_{i,j} - x_{i,s}\left(x_{r,s}\right)^{-1} x_{r,j}, & \text{if } i < r \text{ and } j < s; \\ x_{i,j} & \text{otherwise.} \end{cases}$$

(2) *If $(r,s) \notin B$, then $A_B^{(t)}$ is a subalgebra of*

$$A_B^{(t-1)}[y_{r,s}^{-1}]$$

where

$$x_{i,j} = \begin{cases} y_{i,j} + y_{i,s}\left(y_{r,s}\right)^{-1} y_{r,j}, & \text{if } i < r \text{ and } j < s; \\ y_{i,j} & \text{otherwise.} \end{cases}$$

(3) *If $(r,s) \notin B$, then $A_B^{(t)}[x_{r,s}^{-1}] = A_B^{(t-1)}[y_{r,s}^{-1}]$.*

(4) *If* $(r,s) \in B$, *then* $A_B^{(t)} = A_B^{(t-1)}$. □

In view of Theorem 2.2.1, we conclude the following when $B = \emptyset$.

Corollary 3.2.5. *For every* $t \in [mn]$ *we have* $R^{(t)} \simeq A^{(t)}$, *where* $R^{(t)}$ *are the algebras of Definition 2.1.3, and where the standard generator of* $R^{(t)}$ *with coordinate* (i,j) *maps to the generator of* $A^{(t)}$ *with coordinate* (i,j).

Hence, $A^{(1)} \simeq \mathcal{O}_q(\mathbb{K}^{m\times n})$, $A^{(mn)} \simeq \mathcal{O}_q(\mathcal{M}_{m,n}(\mathbb{K}))$ and both the deleting derivations and $\mathcal{H}$-stratification theories apply to $A^{(t)}$. Moreover, we follow the arrow notation introduced in Section 2.2 to distinguish a generator $x_{i,j}$ of $A_B^{(t)}$ from its image $\overleftarrow{x_{i,j}}$ in $A_B^{(t-1)}$, and a generator $y_{i,j}$ of $A_B^{(t-1)}[y_{r,s}^{-1}]$ from its image $\overrightarrow{y_{i,j}}$ in $A_B^{(t)}[x_{r,s}^{-1}]$.

3.3. **$\mathcal{H}$-Primes as Kernels.** Fix $t \in [mn]$ and a Cauchon diagram B. Denote the matrix of generators for $A^{(t)}$ by $[x_{i,j}]$ and the matrix of generators for $A_B^{(t)}$ by $[x_{i,j}^B]$.

Definition 3.3.1. For $t \in [mn]$ and a Cauchon diagram B, let $\sigma_B^{(t)} : A^{(t)} \to A_B^{(t)}$ be defined on the standard generators by

$$\sigma_B^{(t)}(x_{i,j}) = x_{i,j}^B.$$

The content of Section 3.1 of [6] imply the following two results.

Proposition 3.3.2. *The map* $\sigma_B^{(t)}$ *extends to a well-defined, surjective homomorphism.*

Theorem 3.3.3. *One has*

$$\ker\left(\sigma_B^{(t)}\right) \in \mathcal{H}\text{-Spec}\left(A^{(t)}\right).$$

Moreover, if $t > 1$,

$$\ker\left(\sigma_B^{(t-1)}\right) = \phi_t\left(\ker\left(\sigma_B^{(t)}\right)\right),$$

where ϕ_t *is as in Theorem 2.2.2.*

We conclude this short section with a technical lemma. For $M \in \mathcal{M}_{m,n}(\mathbb{Z}_{\geq 0})$, write $M = M_0 + M_1$, where

$$(M_0)_{i,j} = \begin{cases} (M)_{i,j} & \text{if } (i,j) \leq (r,s); \\ 0 & \text{if } (i,j) > (r,s), \end{cases}$$

and $M_1 = M - M_0$. Now, let $K_t = a \in \ker\left(\sigma_B^{(t)}\right)$. Let $\mathcal{M}$ denote the set of $M \in \mathcal{M}_{m,n}(\mathbb{Z}_{\geq 0})$ for which $\boldsymbol{x}^M$ is a lex term of a. Hence, for some $\alpha_M \in \mathbb{K}^*$,

we have

$$\begin{aligned} a &= \sum_{M\in\mathcal{M}} \alpha_M \boldsymbol{x}^M \\ &= \sum_{M\in\mathcal{M}} \alpha_M \boldsymbol{x}^{M_0}\boldsymbol{x}^{M_1} \\ &= \sum_{N\in\mathcal{M}_{m,n}(\mathbb{Z})} \left(\sum_{\substack{M\in\mathcal{M}:\\ M_1=N_1}} \alpha_M \boldsymbol{x}^{M_0} \right) \boldsymbol{x}^{N_1}. \end{aligned}$$

Consider

$$\sigma_B^{(t)}(a) = \sum_{N\in\mathcal{M}_{m,n}(\mathbb{Z})} \left(\sum_{\substack{M\in\mathcal{M}:\\ M_1=N_1}} \alpha_M \sigma_B^{(t)}(\boldsymbol{x}^{M_0}) \right) \sigma_B^{(t)}(\boldsymbol{x}^{N_1}) = 0 \tag{3}$$

Let $N \in \mathcal{M}_{m,n}(\mathbb{Z})$. If there is a coordinate $(i,j) > (r,s)$ with both $(i,j) \in B$ and $(N)_{i,j} \geq 1$, then $\boldsymbol{x}^{N_1} \in K_t$ since $x_{i,j} = t_{i,j}$ and $\sigma_B^{(t)}(x_{i,j}) = 0$. Otherwise, $\boldsymbol{x}^{N_1} \neq 0$, and the coefficient of $\sigma_B^{(t)}(\boldsymbol{x}^{N_1})$ must be 0 by Proposition 2.1.9, i.e., that

$$\sum_{\substack{M\in\mathcal{M}:\\ M_1=N_1}} \alpha_M \boldsymbol{x}^{M_0} \in K_t.$$

Lemma 3.3.4. *With notation as in the preceding two paragraphs, we have that if $a \in K_t$, then*

$$a = a' + \sum_{\substack{N\in\mathcal{M}_{m,n}(\mathbb{Z}),\\ \boldsymbol{x}^{N_1}\notin K_t}} a_N \boldsymbol{x}^{N_1},$$

where in the second summand each $a_N \in K_t$, and $a' \in K_t$ has the property that every lex term $\boldsymbol{x}^L$ of a' satisfies $\boldsymbol{x}^{L_1} \in K_t$, i.e., $(L)_{i,j} \geq 1$ for some $(i,j) > (r,s)$ and $(i,j) \in B$.

4. Generators of $\mathcal{H}$-Primes

The goal of this section is the proof of Theorem 4.4.1 where we show that an $\mathcal{H}$-prime in $\mathcal{H}$-Spec$(\mathcal{O}_q(\mathcal{M}_{m,n}(\mathbb{K})))$ has, as a right ideal, a Gröbner basis consisting of the quantum minors it contains. That these elements also form a Gröbner basis as a left ideal can be shown similarly.

We begin by defining quantum minors in Section 4.1 and recall Theorem 4.4 in [4] which shows that a q-analogue of Lindströms classic lemma [18] holds in the context of Cauchon graphs. We follow this by reviewing the notions of Gröbner bases as applied to the algebras $A^{(t)}$, and finally prove the main result in Section 4.4.

4.1. **Quantum Minors.** Throughout this section, we fix a Cauchon diagram B and a $t \in [mn]$. Set (r,s) to be the tth smallest coordinate and $[x_{i,j}]$ to be the matrix of generators for $A_B^{(t)}$.

Definition 4.1.1. Let $I = \{i_1 < i_2 < \cdots < i_k\} \subseteq [m]$ and $J = \{j_1 < j_2 < \cdots < j_k\} \subseteq [n]$ be nonempty subsets of the same cardinality. The *quantum minor* associated to I and J is the element of $A_B^{(t)}$ defined by

$$[I \mid J]_B^{(t)} \quad = \quad \sum_{\sigma \in S_k} (-q)^{\ell(\sigma)} x_{i_1, j_{\sigma(1)}} \cdots x_{i_k, j_{\sigma(k)}}$$

where S_k is the set of permutations of $[k]$ and $\ell(\sigma)$ is the number of inversions of $\sigma \in S_k$, i.e., the number of pairs $i, i' \in [k]$ with $i < i'$ but $\sigma(i) > \sigma(i')$.

Remark 4.1.2. The defining expression for $[I \mid J]_B^{(t)}$ is its lexicographic expression. More precisely, for $\sigma \in S_k$, write P_σ to be the $m \times n$ matrix whose submatrix indexed by (I, J) equals the standard $k \times k$ permutation matrix corresponding to σ, and where all other entries of P_σ are zero. We can then write

$$[I \mid J]_B^{(t)} = \sum_{\sigma \in S_k} (-q)^{\ell(\sigma)} \boldsymbol{x}^{P_\sigma}.$$

We will often write $[I \mid J]^{(t)}$ for $[I \mid J]_\emptyset^{(t)}$. However, for the remainder of this section, we write $[I \mid J] = [I \mid J]_B^{(t)}$. For the remainder of this paper we shorten "quantum minor" to just "minor."

Definition 4.1.3. For $I = \{i_1 < i_2 < \cdots < i_k\} \subseteq [m]$ and $J = \{j_1 < j_2 < \cdots < j_k\} \subseteq [n]$, each (i_ℓ, j_ℓ) is called a *diagonal coordinate* of $[I \mid J]$. Moreover, (i_k, j_k) is the *maximum coordinate* of $[I \mid J]$.

As elements of $\mathcal{O}_q((\mathbb{K}^\times)^{m \times n})$, each minor whose maximum coordinate is at most (r,s) reduces to a particularly nice form via a q-analogue of Lindström's Lemma. To explain, we first need to set some notation. At this point, the reader may wish to recall some of the notation set in Section 3.1.

Definition 4.1.4. Let $I = \{i_1, \ldots, i_k\} \subseteq [m]$ and $J = \{j_1, \ldots, j_k\} \subseteq [n]$ be such that $|I| = |J| = k$.

(1) A *vertex-disjoint path system* from the row vertices I to the column vertices J in $G_B^{m \times n}$ is a set of k mutually disjoint paths $(P_1, \ldots, P_k)$ where $P_r \in \Gamma_B^{(t)}(i_r, j_r)$ for each $r \in [k]$. We write

$$\Gamma_B^{(t)}(I \mid J) = \{\text{all vertex-disjoint path systems from } I \text{ to } J \text{ in } G_B^{m \times n}\}.$$

(2) If $\mathcal{P} = (P_1, \ldots, P_k) \in \Gamma_B^{(t)}(I \mid J)$, then the *weight* of $\mathcal{P}$ is the product

$$w(\mathcal{P}) = w(P_1) w(P_2) \cdots w(P_k) \in \mathcal{O}_q((\mathbb{K}^\times)^{m \times n}).$$

Notation 4.1.5. If we wish to explicitly write out the elements of I and J in either $[I \mid J]$ or $\Gamma_B^{(t)}(I \mid J)$, we will omit the braces. For example, we write

$$[I \mid J] = [\{i_1, \ldots, i_k\} \mid \{j_1, \ldots, j_k\}] = [i_1, \ldots, i_k \mid j_1, \ldots, j_k].$$

Example 4.1.6. For the Cauchon graph of Figure 7, the path system $\mathcal{P} = (P_1, P_2, P_3)$ where

$$\begin{aligned} P_1 &= (1, (1,3), (1,2), (2,2), (4,2), (4,1), 1), \\ P_2 &= (2, (2,3), (3,3), (4,3), 3), \\ P_3 &= (4, (4,4), 4) \end{aligned}$$

is a vertex-disjoint path system in $\Gamma_B^{(16)}(1,2,3 \mid 1,3,4)$. In fact, it is the unique such vertex-disjoint path system and

$$w(\mathcal{P}) = (t_{1,2} t_{4,2}^{-1} t_{4,1})(t_{2,3})(t_{3,4}).$$

The reader may verify that the set $\Gamma_B^{(16)}(1,2 \mid 1,2)$ is empty.

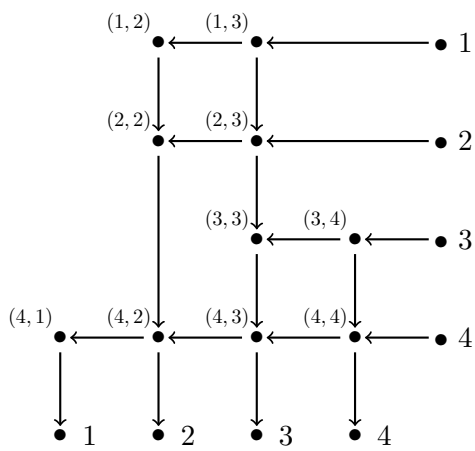

FIGURE 7. A Cauchon graph.

The following is the q-analogue of a special case of Lindström's Lemma.

Theorem 4.1.7 ([4], Theorem 4.4)**.** *If $[I \mid J]$ has maximum coordinate at most (r, s), then, as an element of $\mathcal{O}_q((\mathbb{K}^\times)^{m \times n})$,*

$$[I \mid J] = \sum_{\mathcal{P} \in \Gamma_B^{(t)}(I \mid J)} w(\mathcal{P}).$$

□

The proof in [4] deals with the case $t = mn$ and uses a technique similar to the "tail-switching" method of Theorem 3.1.12. The same proof is valid here due to the assumption that the maximum coordinate of the minor is at most (r, s).

Example 4.1.8. In the Cauchon graph of Figure 7, say with $t = 16$, there is no vertex-disjoint path system from $\{1, 2\}$ to $\{1, 2\}$. Theorem 4.1.7 tells us that $[1, 2 \,|\, 1, 2] = 0$. This may be verified directly:

$$\begin{aligned}
[1, 2 \,|\, 1, 2] &= x_{1,1}x_{2,2} - qx_{1,2}x_{2,1} \\
&= (t_{1,2}t_{4,2}^{-1}t_{4,1} + t_{1,3}t_{2,3}^{-1}t_{2,2}t_{4,2}^{-1}t_{4,1} + t_{1,3}t_{4,3}^{-1}t_{4,1})(t_{2,2} + t_{2,3}t_{4,3}^{-1}t_{4,2}) \\
&\quad - q(t_{1,2} + t_{1,3}t_{2,3}^{-1}t_{1,3}t_{4,3}^{-1}t_{4,2})(t_{2,2}t_{4,2}^{-1}t_{4,1} + t_{2,3}t_{4,3}^{-1}t_{4,1}) \\
&= 0
\end{aligned}$$

Similarly, if one so wishes, it may be checked that

$$\begin{aligned}
[1, 2, 3 \,|\, 1, 3, 4] &= x_{1,1}x_{2,3}x_{3,4} - qx_{1,1}x_{2,4}x_{3,3} - qx_{1,3}x_{2,1}x_{3,4} - q^3x_{1,4}x_{2,3}x_{3,1} \\
&\quad + q^2x_{1,3}x_{2,4}x_{3,1} + q^2x_{1,4}x_{2,1}x_{3,3} \\
&= w(P_1)w(P_2)w(P_3) \\
&= (t_{1,2}t_{4,2}^{-1}t_{4,1})(t_{2,3})(t_{3,4}),
\end{aligned}$$

where P_1, P_2 and P_3 are as in Example 4.1.6.

Before moving on, a quick application of Theorem 4.1.7 is worth mentioning: the well-known fact that in $\mathcal{O}_q(\mathcal{M}_{n,n}(\mathbb{K}))$ the *quantum determinant*

$$D_q = [1, 2 \ldots, n \,|\, 1, 2, \ldots, n]$$

is central. Indeed, it is easy to see that there is exactly one vertex-disjoint path system from $[n]$ to $[n]$ in $G_{\emptyset}^{n\times n}$, namely $\mathcal{P} = (P_1, \ldots, P_n)$, where $P_i = (i, (i, i), i)$ for each $i \in [n]$. Hence,

$$D_q = t_{1,1}t_{2,2} \cdots t_{n,n}.$$

Centrality of D_q follows from the observation that the right hand side commutes with every generator $t_{i,j}^{\pm 1}$ of $\mathcal{O}_q((\mathbb{K}^\times)^{m\times n})$.

The next result was given as Theorem 4.5 in [4], but under the additional assumption that q is transcendental over $\mathbb{Q}$. We here provide a proof for when q is a nonzero, non-root of unity.

Theorem 4.1.9. *A quantum minor $[I \,|\, J]$ with maximum coordinate at most (r, s) equals zero if and only if there does* not *exist a vertex-disjoint path system from I to J, i.e., if and only if $\Gamma_B^{(t)}(I \,|\, J) = \emptyset$.*

Proof. If $\Gamma_B^{(t)}(I \,|\, J) = \emptyset$, then Theorem 4.1.7 implies that $[I \,|\, J] = 0$.

Now suppose $\Gamma_B^{(t)}(I \,|\, J) \neq \emptyset$, i.e., there is at least one vertex-disjoint path system from I to J. The weight of a vertex-disjoint path system $\mathcal{P}$ is equal to $q^\alpha \boldsymbol{t}^{M_{\mathcal{P}}} \in \mathcal{O}_q((\mathbb{K}^\times)^{m\times n})$ for some integer α, where

$$(M_{\mathcal{P}})_{i,j} = \begin{cases} 1 & \text{if there is a path in } \mathcal{P} \text{ with a } \Gamma\text{-turn at } (i, j); \\ -1 & \text{if there is a path in } \mathcal{P} \text{ with a } \lrcorner\text{-turn at } (i, j); \\ 0 & \text{otherwise.} \end{cases}$$

Therefore, if for any distinct $\mathcal{P}, \mathcal{Q} \in \Gamma_B^{(t)}(I \mid J)$ one has $M_{\mathcal{P}} \neq M_{\mathcal{Q}}$, then by Theorem 4.1.7 and Proposition 2.1.9, we may conclude that $[I \mid J] \neq 0$.

Suppose $\mathcal{P} = (P_1, \ldots, P_k)$ and $\mathcal{Q} = (Q_1, \ldots, Q_k)$ are two vertex-disjoint path systems from I to J and that $M_{\mathcal{P}} = M_{\mathcal{Q}}$, i.e., a path in $\mathcal{P}$ has a Γ-turn (respectively $\lrcorner$-turn) at (i, j) if and only if a path in Q does. We aim to show that $\mathcal{P} = \mathcal{Q}$. First, consider the paths P_k and Q_k. Let (i_k, ℓ) be the first vertex where P_k turns, and (i_k, ℓ') be the first vertex where Q_k turns. If $\ell > \ell'$, then Q_k goes straight through (i_k, ℓ'). However, since $\mathcal{Q}$ contains some path Q that turns at (i, ℓ), this implies (since B is a Cauchon diagram) that Q and Q_k intersect, contradicting the choice of $\mathcal{Q}$ as a vertex-disjoint path system. The symmetric case shows that $\ell \not< \ell'$ and hence $\ell = \ell'$. A similar argument can then be applied to the remainder of the turning vertices (if any) in P_k and Q_k, from which we conclude that $P_k = Q_k$. Repeating the argument with P_{k-1} and Q_{k-1}, etc., we see that $\mathcal{P} = \mathcal{Q}$, as desired. □

Corollary 4.1.10. *(Recall the map $\sigma_B^{(t)} : A^{(t)} \to A_B^{(t)}$ of Section 3.3.) A quantum minor $[I \mid J]^{(t)} \in A^{(t)}$ with maximum coordinate at most (r, s) is in $\ker(\sigma_B^{(t)})$ if and only if there does not exist a vertex-disjoint path system from I to J in $G_B^{m \times n}$, i.e., $\Gamma_B^{(t)}(I \mid J) = \emptyset$.* □

We conclude this section by showing how one may construct new vertex-disjoint path systems from I to J from old. First, suppose i is a row vertex and j is a column vertex in $G_B^{m \times n}$, and consider two paths $P \colon i \to j$ and $Q \colon i \to j$. Let $(i = v_0, \ldots, v_k = j)$ be the subsequence of all vertices that P and Q have in common. For each $a \in [k]$, let P_a (respectively Q_a) denote the sub-path of P (respectively Q) starting at v_{a-1} and ending at v_a. If $P_a \neq Q_a$, then the first edge of P_a is perpendicular to the first edge of Q_a. If the first edge of P_a is horizontal, let us say that P_a is *above* Q_a, otherwise P_a is *below* Q_a. Now consider the paths

$$U_a = \begin{cases} P_a & \text{if } P_a = Q_a, \\ P_a & \text{if } P_a \text{ is above } Q_a, \\ Q_a & \text{if } Q_a \text{ is above } P_a, \end{cases}$$

and

$$L_a = \begin{cases} P_a & \text{if } P_a = Q_a, \\ P_a & \text{if } P_a \text{ is below } Q_a, \\ Q_a & \text{if } Q_a \text{ is below } P_a. \end{cases}$$

Definition 4.1.11. With notation as in the preceding paragraph, we let $U(P, Q) \colon i \to j$ be the path

$$U(P, Q) = U_1 \cup U_2 \cup \cdots \cup U_k$$

and $L(P, Q) \colon i \to j$ be the path

$$L(P, Q) = L_1 \cup L_2 \cup \cdots \cup L_k.$$

Example 4.1.12. With respect to Figure 8, U_1 is the solid path from $i = v_0$ to v_1, U_2 is the dashed path from v_1 to v_2, U_3 is the solid path from v_2 to v_3, etc. On the other hand, L_1 is the solid path from $i = v_0$ to v_1, L_2 is the solid path from v_1 to v_2, L_3 is the solid path from v_2 to v_3, etc.

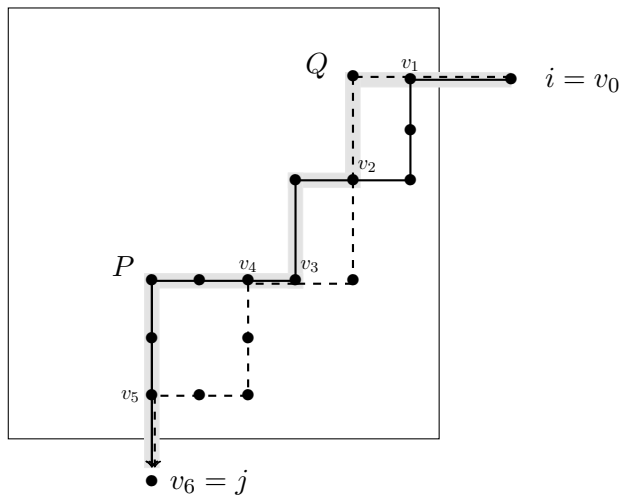

FIGURE 8. P is the solid path; Q is the dashed path; $U(P, Q)$ is the shadowed path.

The following lemma states the key property of $U(P, Q)$ that we require.

Lemma 4.1.13. *For a row vertex i and column vertex j in $G_B^{m\times n}$, consider two paths $P\colon i \to j$ and $Q\colon i \to j$. Suppose that $R\colon i' \to j'$ is a path with $i' > i$. If R is disjoint from either P or Q, then R is disjoint from $U(P, Q)$.*

Proof. With respect to P and Q, we use the notation of the paragraph just prior to Example 4.1.12. Without loss of generality, suppose P and R are disjoint.

If R and $U(P, Q)$ have a vertex w in common, then $w \in Q$ and there exists an a such that w is in the subpath Q_a of Q. Since $w \in U(P, Q)$, we have $U_a = Q_a$ for this a and so Q_a is above P_a. On the other hand, since $i' > i$, R must intersect the Jordan curve formed by P_a and Q_a. Since $G_B^{m\times n}$ is planar, the intersection occurs at a vertex of P, a contradiction. □

Corollary 4.1.14. *Let $i < i'$ be two row vertices and $j < j'$ be two column vertices in $G_B^{m\times n}$. Suppose $P\colon i \to j$ and $P'\colon i' \to j'$ are disjoint paths and $Q\colon i \to j$ and $Q'\colon i' \to j'$ are disjoint paths. Then $U(P, Q)$ and $U(P', Q')$ are disjoint.*

Proof. By two applications of Lemma 4.1.13, $U(P, Q)$ is disjoint from both P' and Q'. Since $U(P', Q')$ consists only of subpaths coming from either P' or Q', we have that $U(P, Q)$ and $U(P', Q')$ are disjoint as well. □

Repeated application of Corollary 4.1.14 immediately gives the following result.

Corollary 4.1.15. *Let $\mathcal{P} = (P_1, \ldots, P_k)$ and $\mathcal{Q} = (Q_1, \ldots, Q_k)$ be vertex-disjoint path systems from I to J. Then*

$$U(\mathcal{P}, \mathcal{Q}) = (U(P_1, Q_1), \ldots, U(P_k, Q_k))$$

is a vertex-disjoint path system from I to J. □

Now, if $\Gamma_B^{(t)}(I \,|\, J)$ is non-empty, then repeated applications of Corollary 4.1.15 to the finitely many path systems in $\Gamma_B^{(t)}(I \,|\, J)$ shows that the next definition is sensible.

Definition 4.1.16. If $\Gamma_B^{(t)}(I \,|\, J) \neq \emptyset$, then the *supremum* of $\Gamma_B^{(t)}(I \,|\, J)$ is the (unique) vertex-disjoint path system $(Q_1, \ldots, Q_k) \in \Gamma_B^{(t)}(I \,|\, J)$ such that for any $\mathcal{P} = (P_1, \cdots, P_k) \in \Gamma_B^{(t)}(I \,|\, J)$ one has, for each $i \in [k]$,

$$U(Q_i, P_i) = Q_i.$$

For $L(P, Q)$, it is clear that results similar to Lemma 4.1.13, Corollary 4.1.14 and Corollary 4.1.15 hold. We omit their explicit statements here, but note that the next definition is also sensible.

Definition 4.1.17. If $\Gamma_B^{(t)}(I \,|\, J) \neq \emptyset$, then the *infimum* of $\Gamma_B^{(t)}(I \,|\, J)$ is the (unique) vertex-disjoint path system $(Q_1, \ldots, Q_k) \in \Gamma_B^{(t)}(I \,|\, J)$ such that for any $\mathcal{P} = (P_1, \cdots, P_k) \in \Gamma_B^{(t)}(I \,|\, J)$ one has, for each $i \in [k]$,

$$L(Q_i, P_i) = Q_i.$$

Example 4.1.18. Once again, consider the Cauchon graph of Figure 7. The supremum of $\Gamma_B^{(16)}(1, 3 \,|\, 1, 3)$ is the path system $(\tilde{Q}_1, \tilde{Q}_2)$ where

$$\tilde{Q}_1 = (1, (1,3), (1,2), (2,2), (4,2), (4,1), 1),$$
$$\tilde{Q}_2 = (3, (3,4), (3,3), (4,3), 3),$$

while the infimum of $\Gamma_B^{(16)}(1, 3 \,|\, 1, 3)$ is the path system (Q_1, Q_2), where

$$Q_1 = (1, (1,3), (2,3), (2,2), (4,2), (4,1), 1),$$
$$Q_2 = (3, (3,4), (4,4), (4,3), 3).$$

4.2. **Gröbner Bases.** Gröbner basis theory is well-known in commutative algebra and fortunately many of its key aspects transfer easily to quantum matrices and the algebras $R^{(t)} \simeq A^{(t)}$. For a more general and detailed account of Gröbner basis theory for noncommutative algebras, we refer the reader to the book of Bueso, Gómez-Torrecillas and Verschoren [3].

Throughout this section, we fix $t \in [mn]$, let (r, s) be the tth smallest coordinate, and denote the matrix of generators of $A^{(t)}$ by $[x_{i,j}]$. We now define a total order of the lexicographic monomials in $A^{(t)}$.

Definition 4.2.1. The *matrix lexicographic order* $\prec$ on $\mathcal{M}_{m,n}(\mathbb{Z})$ is defined as follows. If $M \neq N \in \mathcal{M}_{m,n}(\mathbb{Z})$, let (k,ℓ) be the least coordinate in which M and N differ. Then we set

$$M \prec N \Leftrightarrow (M)_{k,\ell} < (N)_{k,\ell}$$

and say that "$M \prec N$ *at* (k,ℓ)."

If $M \prec N$ are both in $\mathcal{M}_{m,n}(\mathbb{Z}_{\geq 0})$, then the matrix lexicographic order induces a total order (that we also call matrix lexicographic) on the lexicographic monomials of $A^{(t)}$ by setting

$$\boldsymbol{x}^M \prec \boldsymbol{x}^N \Leftrightarrow M \prec N.$$

By allowing the (r,s)-entry in M and N to be negative, this terminology extends to a total order on the lexicographic monomials of $A^{(t)}[x_{r,s}^{-1}]$.

For example, under the matrix lexicographic order, we have

$$x_{i,j} \prec x_{k,\ell} \Leftrightarrow (i,j) > (k,\ell).$$

If $(i,j),(k,\ell) \leq (r,s)$, and (i,j) is northwest of (k,ℓ), then we have the relation

$$x_{k,\ell}x_{i,j} = x_{i,j}x_{k,\ell} - (q-q^{-1})x_{i,\ell}x_{k,j}.$$

On the other hand, we also have

$$x_{i,\ell}x_{k,j} \prec x_{i,j}x_{k,\ell}.$$

Essentially by repeated application of these facts and the other relations amongst the standard generators, we obtain the following, which is a special case of the more general Proposition 2.4 in [3].

Proposition 4.2.2. *For $M,N \in \mathcal{M}_{m,n}(\mathbb{Z}_{\geq 0})$, the lexicographic expression of $\boldsymbol{x}^M\boldsymbol{x}^N$ is*

$$\boldsymbol{x}^M\boldsymbol{x}^N = q^\alpha \boldsymbol{x}^{M+N} + \sum_{L \in \mathcal{M}_{m,n}(\mathbb{Z}_{\geq 0})} \alpha_L \boldsymbol{x}^L,$$

for some integer α and where for every $\alpha_L \neq 0$, one has $L \prec M+N$. □

Definition 4.2.3. Let $M,N \in \mathcal{M}_{m,n}(\mathbb{Z}_{\geq 0})$. We say that $\boldsymbol{x}^M$ *divides* $\boldsymbol{x}^N$ if $(M)_{i,j} \leq (N)_{i,j}$ for all $(i,j) \in [m] \times [n]$.

Using this terminology, we will use Proposition 4.2.2 in the following way.

Corollary 4.2.4. *Let $M,N \in \mathcal{M}_{m,n}(\mathbb{Z}_{\geq 0})$. If $\boldsymbol{x}^M$ divides $\boldsymbol{x}^N$, then there exists an integer α, matrices $L \prec N$, and scalars $\alpha_L \in \mathbb{K}^*$ such that*

$$\boldsymbol{x}^N = q^\alpha \boldsymbol{x}^M \boldsymbol{x}^{N-M} + \sum_L \alpha_L \boldsymbol{x}^L. \quad \square$$

Remark 4.2.5. Proposition 4.2.2, Defintion 4.2.3 and Corollary 4.2.4 extend to $A^{(t)}[x_{r,s}^{-1}]$ by allowing the (r,s)-entry in each matrix to be negative.

Definition 4.2.6. Let $a \in A^{(t)}$ with lexicographic expression

$$a = \sum_L \alpha_L \boldsymbol{x}^L.$$

The *leading term* of a is the maximum lex term of a with respect to the matrix lexicographic order. We denote the leading term of a by $\ell t(a)$.

We are now ready to give the definition of a Gröbner basis for a right ideal.

Definition 4.2.7. Let J be a right ideal of $A^{(t)}$, and let

$$G = \{g_1, g_2, \ldots, g_k\} \subseteq J.$$

We say that G is a *Gröbner basis* for J if for every $a \in J$ there exists a $g_i \in G$ such that $\ell t(g_i)$ divides $\ell t(a)$.

If one has a Gröbner basis $\{g_1, g_2, \ldots, g_k\}$ for a right ideal J, then one may find an expression for any $a \in J$ as a combination of the g_i recursively. If $\ell t(a)$ is divided by $\ell t(g_i)$, then by Corollary 4.2.4 we may write

$$a = g_i a' + b$$

where $\ell t(b) \prec \ell t(a)$. Since $b \in J$, we can repeat the process if $b \neq 0$. As there are only finitely many lexicographic terms smaller than $\ell t(a)$, this will end after finitely many steps. Thus, the elements of the Gröbner basis generate J.

We will eventually deal with quantum minors and in this context require the following, more refined version of Corollary 4.2.4.

Lemma 4.2.8. *Let $[I \mid J]^{(t)} \in A^{(t)}$ be a minor with maximum coordinate (i_k, j_k). Recalling Remark 4.1.2, if we write*

$$[I \mid J]^{(t)} = \sum_{\sigma \in S_k} (-q)^{\ell(\sigma)} \boldsymbol{x}^{P_\sigma},$$

then:

(1) *One has $\ell t([I \mid J]^{(t)}) = \boldsymbol{x}^{P_{\mathrm{id}}}$, where* id *is the identity permutation;*
(2) *If $\boldsymbol{x}^{P_{\mathrm{id}}}$ divides $\boldsymbol{x}^M$ for some $M \in \mathcal{M}_{m,n}(\mathbb{Z}_{\geq 0})$, then*

$$\boldsymbol{x}^M = q^\alpha [I \mid J]^{(t)} \boldsymbol{x}^{M - P_{\mathrm{id}}} + w, \tag{4}$$

for some integer α and $w \in A^{(t)}$ where, if $\ell t(w) = \boldsymbol{x}^K$, then $K \prec M$ at a coordinate northwest of (i_k, j_k).

The first part of Lemma 4.2.8 is a trivial observation. The justification for the second part is fairly technical, but its heart is the following auxiliary lemma. For this lemma we set $E_{k,\ell}$ to be the $m \times n$ matrix with a 1 in coordinate (k, ℓ) and 0 elsewhere.

Lemma 4.2.9. *If $(i,j) \in [m] \times [n]$ and $\boldsymbol{x}^M \in A^{(t)}$ is such that all entries of M in coordinates larger than (a,b) are zero, then we may write*

$$\boldsymbol{x}^M x_{i,j} = q^\alpha x_{i,j} \boldsymbol{x}^M + w,$$

where $\alpha \in \mathbb{Z}$, and if $w \neq 0$ and $\boldsymbol{x}^K$ is a lex term of w, then M and K are equal in all entries northeast of (i,j). Moreover, if $\ell t(w) = \boldsymbol{x}^L$, then $L \prec M + E_{i,j}$ at a coordinate northwest of (i,j)

Proof. We proceed by induction on j, starting with the easy observation that for $j = 1$, $x_{i,j}$ and $\boldsymbol{x}^M$ q^*-commute.

Now, fix $j > 1$. Consider the process of commuting $x_{i,j}$ to the left of $\boldsymbol{x}^M$, where *step* (a,b) is defined to be the point in this process just before we commute $x_{i,j}$ past $x_{a,b}^{(M)_{a,b}}$. For a given (a,b), let $M_0 \in \mathcal{M}_{m,n}(\mathbb{Z}_{\geq 0})$ be equal to M in all entries with coordinate less than (a,b) and let $M_1 = M - M_0$. Suppose we are at step (a,b) and we have an expression of the form

$$\boldsymbol{x}^M x_{i,j} = q^\alpha \boldsymbol{x}^{M_0} x_{a,b}^{(M)_{a,b}} x_{i,j} \boldsymbol{x}^{M_1} + w,$$

where $\alpha \in \mathbb{Z}$ and $w \in A^{(t)}$ is such that $\ell t(w) \prec M + E_{i,j}$ and if $w \neq 0$, and $\boldsymbol{x}^K$ is a lex term of w, then M and K are equal in all entries northeast of (i,j). We claim that there is such an expression for step $(a,b)^-$. Note that, once proven, repeated applications of this claim proves the inductive step, and hence the lemma.

If $x_{a,b}$ and $x_{i,j}$ q^*-commute, then the claim is trivial, so suppose $x_{a,b}x_{i,j} = x_{i,j}x_{a,b} + (q - q^{-1})x_{i,b}x_{a,j}$. Thus $b < j$ and, as is easily shown by induction on $(M)_{a,b}$, there is a $c \in \mathbb{K}$ such that

$$x_{a,b}^{(M)_{a,b}} x_{i,j} = x_{i,j} x_{a,b}^{(M)_{a,b}} + c x_{i,b} x_{a,b}^{(M)_{a,b}-1} x_{a,j}.$$

From this we obtain

$$\begin{aligned} q^\alpha \boldsymbol{x}^{M_0} x_{a,b}^{(M)_{a,b}} x_{i,j} \boldsymbol{x}^{M_1} + w = q^\alpha \boldsymbol{x}^{M_0} x_{i,j} x_{a,b}^{(M)_{a,b}} \boldsymbol{x}^{M_1} \\ + c q^\alpha \boldsymbol{x}^{M_0} x_{i,b} x_{a,b}^{(M)_{a,b}-1} x_{a,j} \boldsymbol{x}^{M_1} + w. \end{aligned}$$

Note that the claim is established if we can show that any lex term $\boldsymbol{x}^K$ of $\boldsymbol{x}^{M_0} x_{i,b} x_{a,b}^{(M)_{a,b}-1} x_{a,j} \boldsymbol{x}^{M_1}$ is such that K equals M northeast of (i,j).

As M_1 is zero in all entries with coordinates less than (a,b), there is a $\beta \in \mathbb{Z}$ with $x_{a,b}^{(M)_{a,b}-1} x_{a,j} \boldsymbol{x}^{M_1} = q^\beta \boldsymbol{x}^{M_1'}$, where $M_1' = M_1 + ((M)_{a,b} - 1)\, E_{a,b} + E_{a,j}$. Since $b < j$, we apply the induction hypothesis for b to obtain

$$x_{i,b} \boldsymbol{x}^{M_1'} = q^\gamma \boldsymbol{x}^{M_1' + E_{i,b}} - w',$$

for some integer γ and $w' \in A^{(t)}$, where any lex term $\boldsymbol{x}^{K'}$ of w' is such that $K' \prec M_1'$ and K' equals M_1' in all entries northeast of (i,b), and so in particular northeast of (i,j). Moreover, since $K' \prec M_1'$, we know that K' can only be zero in all entries with coordinate less than (a,b). For this reason, $\boldsymbol{x}^{M_0} \boldsymbol{x}^{K'} = \boldsymbol{x}^{M_0 + K'}$ where $M_0 + K'$ is equal to M in all entries northeast of

(i,j). As $M_1' + E_{i,b}$ also equals M in all entries northeast of (i,j), we have established the claimed expression at step $(a,b)^-$.

Finally, from the above procedure we also get $L \prec M + E_{i,j}$ where $\ell t(w) = \boldsymbol{x}^L$. Furthermore, since the commutation relations are homogeneous with respect to the grading introduced at the end of Section 2.1, we in fact have that $L \prec M + E_{i,j}$ at a coordinate northwest of (i,j). □

Lemma 4.2.9 roughly says that as we commute $x_{i,j}$ to the left of $\boldsymbol{x}^M$ and find the lexicographic expression of any new terms, one never needs to "create or destroy" any generator with coordinate northeast of (i,j).

Proof of Lemma 4.2.8, Part 2. By applying Lemma 4.2.9 to the generators corresponding to $\boldsymbol{x}^{P_{\mathrm{id}}}$ in $\boldsymbol{x}^M$, we find that there is an integer α and a $w \in A^{(t)}$ such that

$$\boldsymbol{x}^M = q^\alpha \boldsymbol{x}^{P_{\mathrm{id}}} \boldsymbol{x}^{M - P_{\mathrm{id}}} + w',$$

where $w' \in A^{(t)}$ and if $\ell t(w') = \boldsymbol{x}^K$, then $K \prec M$ at a coordinate northwest of (i_k, j_k). On the other hand, notice that if $\sigma \in S_k$ with $\sigma \neq \mathrm{id}$, then

$$\boldsymbol{x}^{P_\sigma} \boldsymbol{x}^{M - P_{\mathrm{id}}} = \boldsymbol{x}^{M - P_{\mathrm{id}} + P_\sigma} + w'',$$

where $\boldsymbol{x}^{M - P_{\mathrm{id}} + P_\sigma}$ is the leading term of the right-side and $M - P_{\mathrm{id}} + P_\sigma \prec M$ at a coordinate northwest of (i_k, j_k). Our desired equation

$$\boldsymbol{x}^M = q^\alpha [I \mid J]^{(t)} \boldsymbol{x}^{M - P_{\mathrm{id}}} + w,$$

follows for some integer α and $w \in A^{(t)}$ where, if $\ell t(w) = \boldsymbol{x}^K$, then $K \prec M$ at a coordinate northwest of (i_k, j_k).

□

4.3. **Adding Derivations and Lexicographic Expressions.** Throughout this section, we fix $t \in [mn], t \neq 1$ and let (r,s) be the tth smallest coordinate. Let $[x_{i,j}]$ be the matrix of generators for $A^{(t)}$, and $[y_{i,j}]$ the matrix of generators for $A^{(t-1)}$.

The proof of the main theorem requires a somewhat detailed understanding of the effect of the adding derivations map on the lexicographic expressions of an element $a \in A^{(t)}$ and its image $\overleftarrow{a} \in A^{(t-1)}[y_{r,s}^{-1}]$. This short section provides this information.

Recall from Section 2.2 that the adding derivations map is the homomorphism

$$\overleftarrow{\cdot} : A^{(t)} \to A^{(t-1)}[y_{r,s}^{-1}]$$

defined on the standard generators by

$$\overleftarrow{x_{i,j}} = \begin{cases} y_{i,j} + y_{i,s} y_{r,s}^{-1} y_{r,j}, & \text{if } (i,j) \text{ is northwest of } (r,s); \\ y_{i,j}, & \text{otherwise,} \end{cases}$$

or, equivalently, by

$$\overleftarrow{x_{i,j}} = \begin{cases} y_{i,j} + q y_{i,s} y_{r,j} y_{r,s}^{-1}, & \text{if } (i,j) \text{ is northwest of } (r,s); \\ y_{i,j}, & \text{otherwise.} \end{cases}$$

Let $\boldsymbol{x}^M \in A^{(t)}$ and write

$$\boldsymbol{x}^M = x_{i_1,j_1} x_{i_2,j_2} \cdots x_{i_p,j_p},$$

where for each $k \in [p-1]$, $(i_k, j_k) \leq (i_{k+1}, j_{k+1})$. Let $\mathcal{D}$ be the set of all k such that (i_k, j_k) is northwest of (r,s). Then we may write,

$$\overleftarrow{\boldsymbol{x}^M} = \sum_{C \subseteq \mathcal{D}} q^{|C|} \overleftarrow{x_{i_1,j_1}}^{C} \overleftarrow{x_{i_2,j_2}}^{C} \cdots \overleftarrow{x_{i_p,j_p}}^{C}, \tag{5}$$

where, for a $C \subseteq \mathcal{D}$,

$$\overleftarrow{x_{i_k,j_k}}^{C} = \begin{cases} y_{i_k,s} y_{r,j_k} y_{r,s}^{-1}, & \text{if } k \in C; \\ y_{i_k,j_k}, & \text{if } k \notin C. \end{cases}$$

Lemma 4.3.1. *With notation as in the preceding discussion, let $z \in A^{(t-1)}[y_{r,s}^{-1}]$ be a summand on the right side of Equation (5), so that for some $C \subseteq D$,*

$$z = \overleftarrow{x_{i_1,j_1}}^{C} \overleftarrow{x_{i_2,j_2}}^{C} \cdots \overleftarrow{x_{i_p,j_p}}^{C}.$$

Then in the lexicographic expression of z, written as

$$z = \sum_{L_C \in \mathcal{M}_{m,n}(\mathbb{Z})} \alpha_{L_C} \boldsymbol{y}^{L_C}$$

where $\alpha_{L_C} \in \mathbb{K}^*$, the following hold.

(1) *For each L_C,*
$$(L_C)_{r,s} = (M)_{r,s} - |C|.$$
(2) *If $C \neq \emptyset$, then for every L_C, we have $L_C \prec M$ at the least (i_k, j_k) for which $k \in C$.*
(3) *For each L_C and for each $i \in [m] \setminus r$,*
$$(L_C)_{i,s} = (M)_{i,s} + |\{k \in C \mid i_k = i\}|.$$
(4) *If (i,j) is northwest of (r,s) and if*
$$(L_C)_{i,j} > (M)_{i,j} - |\{k \in C \mid (i_k, j_k) = (i,j)\}|,$$
then there is a coordinate (i,j') with $1 \leq j' < j$ such that
$$(L_C)_{i,j'} < (M)_{i,j'} - |\{k \in C \mid (i_k, j_k) = (i,j')\}|.$$
(5) *For each L_C, the entries in coordinates* not *north, west or northwest of (r,s) are equal to the corresponding entries in M.*

Proof. First, let us split the summand z by row indices, i.e., write

$$z = (\overleftarrow{x}^{C}_{1,j_{1,1}}\overleftarrow{x}^{C}_{1,j_{1,2}} \cdots \overleftarrow{x}^{C}_{1,j_{1,p_1}}) \cdots (\overleftarrow{x}^{C}_{m,j_{m,1}}\overleftarrow{x}^{C}_{m,j_{1,2}} \cdots \overleftarrow{x}^{C}_{m,j_{1,p_m}}),$$

where, for each $i \in [m]$, the generators appearing in the monomial

$$\overleftarrow{x}^{C}_{i,j_{i,1}}\overleftarrow{x}^{C}_{i,j_{i,2}} \cdots \overleftarrow{x}^{C}_{i,j_{i,p_i}}$$

have indices

$$(a,b) \in \{(i,j) \mid j \in [n]\} \cup \{(r,j) \mid j \in [s]\}.$$

Moreover, if $y_{r,j}$ appears with $j \neq s$, then $y_{r,j}$ is to the right of any $y_{i,j'}$ with $j' < j$. In other words, such a $y_{r,j}$ q^*-commutes with every generator appearing to its right. Also, in $A^{(t-1)}$, we have that $y_{r,s}$ actually q^*-commutes with every generator of $A^{(t-1)}$. Thus $y_{r,s}^{-1}$ q^*-commutes with every generator in $A^{(t-1)}[y_{r,s}^{-1}]$ and we may write

$$\overleftarrow{x}^{C}_{i,j_{i,1}}\overleftarrow{x}^{C}_{i,j_{i,2}} \cdots \overleftarrow{x}^{C}_{i,j_{i,p_1}} = q^{\alpha}\boldsymbol{y}^{M_i}\boldsymbol{y}^{R_i}y_{r,s}^{-\beta},$$

where $\alpha \in \mathbb{Z}$, β is the number of occurrences of $y_{r,s}^{-1}$ in the left monomial, $M_i \in \mathcal{M}_{m,n}(\mathbb{Z}_{\geq 0})$ is the matrix defined by

$$(M_i)_{a,b} = \begin{cases} 0 & \text{if } a \neq i; \\ (M)_{i,b} - |\{k \in C \mid (i_k, j_k) = (i,b)\}| & \text{if } a = i \text{ and } 1 \leq b < s; \\ (M)_{i,s} + |\{k \in C \mid i_k = i\}| & \text{if } a = i \text{ and } b = s; \\ (M)_{i,b} & \text{if } s < b \leq n, \end{cases}$$

and R_i is a matrix whose nonzero entries appear only in coordinates between $(r,1)$ and $(r,s-1)$.

It follows that we may write

$$z = q^{\alpha'}\boldsymbol{y}^{M_1}\boldsymbol{y}^{R_1}\boldsymbol{y}^{M_2}\boldsymbol{y}^{R_2}\cdots\boldsymbol{y}^{M_{r-1}}\boldsymbol{y}^{R_{r-1}}\boldsymbol{y}^{R_r}y_{r,s}^{-|C|}\boldsymbol{y}^{L}, \tag{6}$$

for some $\alpha' \in \mathbb{Z}$, where the entries of R_r equal those of M at coordinates between $(r,1)$ and $(r,s-1)$ and are zero elsewhere, and where entries of L equal those of M at all coordinates greater than (r,s).

Next, let $y_{r,j}$ be a generator with $1 \leq j < s$, and consider $y_{r,j}\boldsymbol{y}^{M_i}$ for some $1 \leq i < r$. Recall that, for $j' < j$, we have the relation

$$y_{r,j}y_{i,j'} = y_{i,j'}y_{r,j} - (q - q^{-1})y_{i,j}y_{r,j'}.$$

Repeated applications of this relation imply that

$$y_{r,j}\boldsymbol{y}^{M_i} = \boldsymbol{y}^{M_i}y_{r,j} + \sum_{\ell}\alpha_{\ell}\boldsymbol{y}^{M_i^{\ell}}\boldsymbol{y}^{R^{\ell}},$$

for nonzero scalars α_{ℓ} and where:

(1) Every $M_i^{\ell} \in \mathcal{M}_{m,n}(\mathbb{Z}_{\geq 0})$ satisfies $M_i^{\ell} \prec M_i$, and the entries of each M_i^{ℓ} differ from those in M_i only between coordinates $(i,1)$ and $(i,s-1)$;

(2) Each $R^\ell \in \mathcal{M}_{m,n}(\mathbb{Z}_{\geq 0})$ has nonzero entries only between coordinates $(r,1)$ and $(r,s-1)$.

In particular, when finding the lexicographic expression of the monomial z written in the form of Equation (6), we never create or destroy any of the generators $y_{i,s}$, $y_{r,s}^{\pm 1}$, nor any generator with coordinates *not* north, west or northwest. Parts 1,3 and 5 of the lemma follow. It also follows that for every L_C and $i \in [r-1]$, if the entries in L_C and M with coordinates between $(i,1)$ and $(i,s-1)$ differ, then the first different entry is smaller in L_C. This implies Part 4. Finally, Part 2 comes from the fact that each term in the lexicographic expression of z must start with $y_{i_1,j_1} \cdots y_{i_{k-1},j_{k-1}}$ since no subsequent relation produces a generator $y_{a,b}$ with $(a,b) < (i_k, j_k)$.

□

Corollary 4.3.2. *If $a \in A^{(t)}$, and $\ell t(a) = \boldsymbol{x}^M$, then $\ell t(\overleftarrow{a}) = \boldsymbol{y}^M$.*

Proof. If $C \neq \emptyset$, then each term $\boldsymbol{y}^{L_C}$ in the resulting lexicographic expression satisfies $\boldsymbol{y}^{L_C} \prec \boldsymbol{y}^M$ by Part 2 of Lemma 4.3.1. On the other hand,

$$\boldsymbol{y}^M = \overleftarrow{x}_{i_1,j_1}^{\emptyset} \overleftarrow{x}_{i_2,j_2}^{\emptyset} \cdots \overleftarrow{x}_{i_p,j_p}^{\emptyset} .$$

□

4.4. **Generators of $\mathcal{H}$-primes.** We come to the main theorem of this paper. It is fairly straightforward to modify the proof and some of the above definitions to obtain the analogous result for left ideals. We remind the reader that an appendix to this paper provides an index of terms and notation used in the following proof.

Theorem 4.4.1. *Fix the following data: A Cauchon diagram B; $t \in [mn]$; (r,s) the tth smallest coordinate; $[x_{i,j}]$ the matrix of generators for $A^{(t)}$; and the sequence of $\mathcal{H}$-primes $(K_1, \ldots, K_{mn})$, where*

$$K_t = \ker\left(\sigma_B^{(t)}\right).$$

Let G_t be the set of all $x_{i,j}$ with $(i,j) > (r,s)$ and $(i,j) \in B$, together with all quantum minors in K_t whose maximum coordinate is at most (r,s). Then G_t is a Gröbner basis for K_t as a right ideal.

Proof. First, note that $B = \emptyset$ if and only if $K_1 = \langle 0 \rangle$. On the other hand, in view of Theorem 2.2.1, we have $K_t = \langle 0 \rangle$ for some $t \in [mn]$ if and only if $K_t = \langle 0 \rangle$ for every $t \in [mn]$. Since the empty set generates $\langle 0 \rangle$, we are done in the case $B = \emptyset$. From now on, we suppose $B \neq \emptyset$ and proceed by induction on t.

If $t = 1$, then the only minor in $A^{(1)} = \mathcal{O}_q(\mathbb{K}^{m \times n})$ whose maximum coordinate is $(1,1)$ is

$$[1 \mid 1]^{(1)} = t_{1,1}.$$

Since $t_{1,1} \in K_1$ if and only if $(1,1) \in B$, we see that G_1 is precisely the set of generators $t_{i,j}$ with $(i,j) \in B$. On the other hand, these $t_{i,j}$ generate K_1

by Theorem 2.3.4 and so Proposition 2.1.9 implies G_1 is indeed a Gröbner basis.

So now suppose $t \neq 1$ and that G_{t-1} is a Gröbner basis for K_{t-1}. Let $[y_{i,j}]$ be the matrix of generators for $A^{(t-1)}$. There are two cases to consider, according to whether or not $(r,s) \in B$.

If $(r,s) \in B$, then, as elements of $\mathcal{O}_q((\mathbb{K}^\times)^{m\times n})$, we have for each coordinate (i,j) that

$$\sigma_B^{(t)}(x_{i,j}) = \sigma_B^{(t-1)}(y_{i,j}).$$

Therefore,

$$a = \sum_L \alpha_L \boldsymbol{x}^L \in K_t$$

if and only if

$$a' = \sum_L \alpha_L \boldsymbol{y}^L \in K_{t-1}.$$

Hence, if $\boldsymbol{y}^M$ divides $\ell t(a')$, then $\boldsymbol{x}^M$ divides $\ell t(a)$.

Now, the previous paragraph also implies that if $[I \mid J]^{(t-1)} \in K_{t-1}$ with maximum coordinate at most $(r,s)^-$, then $[I \mid J]^{(t)} \in K_t$ with maximum coordinate strictly less than (r,s) so that $[I \mid J]^{(t)} \in G_t$. Also, if $(i,j) > (r,s)$ is such that $(i,j) \in B$, then $x_{i,j} \in K_t$. Finally, since $(r,s) \in B$,

$$[r \mid s]^{(t)} = x_{r,s} \in K_t.$$

It now follows that since G_{t-1} is a Gröbner basis for K_{t-1}, G_t is a Gröbner basis[5] for K_t.

Now assume $(r,s) \notin B$, i.e., $x_{r,s} \notin K_t$ and that G_{t-1} is a Gröbner basis for K_{t-1}. In the following we aim to verify that G_t satisfies Definition 4.2.7 for K_t, but this requires some effort. The strategy we employ is as follows. Suppose a nonzero $a \in K_t$ is chosen such that $\ell t(a) = \boldsymbol{x}^M$ is not divisible by the leading term of a member of G_t. Using the full power of the paths viewpoint developed above, we deduce in Claims 1 and 2 some structural properties of M. Using the information so obtained, we then find a term $\boldsymbol{y}^{N_C} \in A^{(t-1)}$ that *is not* divisible by the leading term of any member of G_{t-1} (Claim 3) yet *is* the leading term of an element of K_{t-1} (Claims 4 and 5). Of course, these opposing properties contradict the induction hypothesis.

Fix a nonzero, monic $a \in K_t$ with lexicographic expression

$$a = \boldsymbol{x}^M + \sum_L \alpha_L \boldsymbol{x}^L,$$

where $\ell t(a) = \boldsymbol{x}^M$. Furthermore, we may assume that a is homogeneous with respect to the grading introduced at the end of Section 2.1, i.e., that for each $i \in [m]$, the ith row sum of every L and M are equal, and for every $j \in [n]$, the jth column sum of M and every L are equal.

[5]In general we have actually shown that a subset of G_t is a Gröbner basis for K_t, but nothing is lost by adding the extra minors in K_t with maximum coordinate equal to (r,s).

If there exists an $(i,j) \in B$ with $(i,j) > (r,s)$ and $(M)_{i,j} \geq 1$, then $x_{i,j} \in G_t$ divides $\ell t(a)$, and we are done. So we may assume no such (i,j) exists. In fact by Lemma 3.3.4 we may further assume that M and every L have the same values in each coordinate $(i,j) > (r,s)$, and, without loss of generality, that these entries are all zero, i.e., $(M)_{i,j} = 0 = (L)_{i,j}$ for all $(i,j) > (r,s)$.

Since $(r,s) \notin B$, we have

$$K_t = \overrightarrow{K_{t-1}}[x_{r,s}^{-1}] \cap A^{(t)},$$

and so there exists a $b \in K_{t-1}$ and a nonnegative integer h with

$$a = \overrightarrow{b}\, x_{r,s}^{-h}.$$

Then $b = \overleftarrow{a}\, y_{r,s}^{h}$, and by Corollary 4.3.2,

$$\ell t(b) = \boldsymbol{y}^M y_{r,s}^h.$$

We henceforth call a minor in G_{t-1} whose leading term divides $\ell t(b)$ *critical*. Note that since the maximum coordinate of a critical minor is at most $(r,s)^-$, its leading term actually divides $\boldsymbol{y}^M$. By induction, there exists at least one critical minor. Now, if $[I \,|\, J]^{(t-1)}$ is critical and $[I \,|\, J]^{(t)} \in K_t$, then, since the maximum coordinate of $[I \,|\, J]^{(t)}$ is strictly less than (r,s), we have have found an element of G_t whose leading term divides $\ell t(a)$, and we are done. *From now on, we assume that if $[I \,|\, J]^{(t-1)}$ is critical, then $[I \,|\, J]^{(t)} \notin K_t$.*

Claim 1. *If $[I \,|\, J]^{(t-1)}$ is critical, where $I = (i_1 < i_2 < \cdots < i_k)$ and $J = (j_1 < j_2 < \cdots < j_k)$, then we may assume the following.*

1. *The set $\Gamma_B^{(t)}(I \,|\, J)$ is nonempty and every vertex-disjoint path system in it contains a path with a $\lrcorner$-turn at (r,s).*
2. *If $(i_{k'}, j_{k'})$ is the largest diagonal coordinate northwest of (r,s), then*
$$[i_1, \ldots, i_{k'} \,|\, j_1, \ldots, j_{k'}]^{(t-1)}$$
is critical.
3. *If (i_k, j_k) is northwest of (r,s), then for every (i,j) with $i_k < i \leq r$ and $j_k < j \leq s$, one has $(M)_{i,j} = 0$.*

Proof of Claim 1:
Part 1: This is simply restating the assumption preceding the claim, since otherwise there is a vertex-disjoint path system in $\Gamma_B^{(t-1)}(I \,|\, J)$, i.e.,

$$[I \,|\, J]^{(t-1)} \notin K_{t-1}.$$

Part 2: By Part 1, there exists a $\lrcorner$-turn at (r,s) in any vertex-disjoint path system in $\Gamma_B^{(t)}(I \,|\, J)$. Hence $r \notin I$ (in particular, $i_k < r$), $s \notin J$ and at least (i_1, j_1) is northwest of (r,s). Therefore (i_k, j_k) is either northwest or northeast of (r,s).

If (i_k, j_k) is northwest of (r, s), then there is nothing to prove, so suppose (i_k, j_k) is northeast of (r, s). If $[I \setminus i_k \mid J \setminus j_k]^{(t-1)} \in K_{t-1}$, then replace $[I \mid J]^{(t-1)}$ with $[I \setminus i_k \mid J \setminus j_k]^{(t-1)}$ and restart this argument. So assume that (i_k, j_k) is northeast of (r, s) and $[I \setminus i_k \mid J \setminus j_k]^{(t-1)} \notin K_{t-1}$, i.e, there exists a vertex-disjoint path system

$$\mathcal{P} = (P_1, \ldots, P_{k-1}) \in \Gamma_B^{(t-1)}(I \setminus i_k \mid J \setminus j_k).$$

Let

$$\mathcal{Q} = (Q_1, \ldots, Q_k) \in \Gamma_B^{(t)}(I \mid J).$$

From Part 1, there exists a $Q_\alpha : i_\alpha \to j_\alpha$ containing (r, s) as a ⅃-turn. Clearly, we must have $\alpha = k'$, and $k' \neq k$ since (i_k, j_k) is northeast of (r, s). Recalling Corollary 4.1.15, consider the vertex-disjoint path system

$$\mathcal{R} = U(\mathcal{P}, \mathcal{Q} \setminus Q_k) \in \Gamma_B^{(t-1)}(I \setminus i_k \mid J \setminus j_k)$$

See Figure 9. Since $P_{k'}$ does not contain a ⅃-turn at (r, s), the path $U(P_{k'}, Q_{k'})$ does not contain a ⅃-turn at (r, s). Moreover, by Corollary 4.1.14, $\mathcal{R}$ is disjoint from Q_k. Hence, $\mathcal{R} \cup Q_k$ is a vertex-disjoint path system in the empty set $\Gamma_B^{(t-1)}(I \mid J)$, an impossibility.

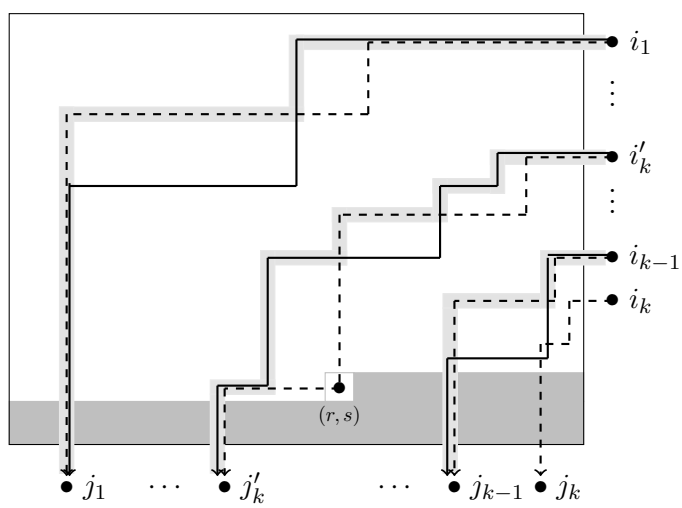

FIGURE 9. Illustration of the idea used to prove Part 2 of Claim 1. The dashed paths represent $\mathcal{Q} \in \Gamma_B^{(t)}(I \mid J)$. The solid paths represent $\mathcal{P} \in \Gamma_B^{(t-1)}(I \setminus i_k \mid J \setminus j_k)$. The shaded paths represent $U(\mathcal{P}, \mathcal{Q} \setminus Q_k)$.

Part 3: If $(i, j) = (r, s)$ and $(M)_{r,s} \geq 1$, then $[I \cup r \mid J \cup s]^{(t)}$ is a minor whose leading term divides $\boldsymbol{x}^M$ with maximum coordinate (r, s). The only path in $\Gamma_B^{(t)}(r, s)$ is $(r, (r, s), s)$. Hence, if $\Gamma_B^{(t)}(I \cup r \mid J \cup s)$ is nonempty, then any path system in this set would have a sub-path system from I to J

not using (r,s). But this is a vertex-disjoint path system in the empty set $\Gamma_B^{(t-1)}(I \mid J)$, an impossibility. Thus, $[I \cup r \mid J \cup s]^{(t)} \in G_t$ with leading term dividing $\boldsymbol{x}^M = \ell t(a)$, and there is nothing left to prove. So we may assume $(M)_{r,s} = 0$.

If $(i,j) \neq (r,s)$ but $(M)_{i,j} \geq 1$, then the leading term of $[I \cup i \mid J \cup j]^{(t-1)}$ divides $\boldsymbol{y}^M$. Since $[I \mid J]^{(t-1)} \in K_{t-1}$, there is no vertex-disjoint path system in $\Gamma_B^{(t-1)}(I \mid J)$ and so certainly no vertex-disjoint path system in $\Gamma_B^{(t-1)}(I \cup i \mid J \cup j)$. Thus, $[I \cup i \mid J \cup j]^{(t-1)}$ is critical and so there exists a $\mathcal{P} \in \Gamma_B^{(t)}(I \cup i \mid J \cup j)$. By Part 1 and vertex-disjointness, the path $P : i \to j \in \mathcal{P}$ is necessarily the path with a ⅃-turn at (r,s). But then $\mathcal{P} \setminus \{P\}$ is a vertex-disjoint path system in the empty set $\Gamma_B^{(t-1)}(I \mid J)$, an impossibility. This completes the proof of Claim 1.

We now say that a coordinate (i,j) is *critical* if (i,j) is northwest of (r,s) and there exists a critical minor with (i,j) as its maximum coordinate.

Claim 2. *If (i,j) critical, then every (i,j') for $j < j' < s$ with $(M)_{i,j'} \geq 1$ is critical, and every (i',j) for $i < i' < r$ with $(M)_{i',j} \geq 1$ is critical.*

Proof of Claim 2: Suppose $[I \mid J]^{(t-1)}$ is a critical minor whose maximum coordinate is (i,j). Notice that the leading term of

$$[I \mid J \setminus j \cup j']^{(t-1)}$$

divides $\boldsymbol{y}^M$ and its maximum coordinate is (i,j'), so it remains to show that this minor is in K_{t-1}.

Since $[I \mid J]^{(t-1)}$ is critical, we may consider the supremum $\mathcal{P} \in \Gamma_B^{(t)}(I \mid J) \neq \emptyset$, which, by Part 1 of Claim 1, contains a path $P : i \to j$ with a ⅃-turn at (r,s). Notice that P must have a horizontal subpath from (r,s) to (r,j), followed by a Γ-turn at (r,j), and then vertically down to the column vertex j. In particular, (r,j) is a white vertex. See Figure 10.

Suppose that $[I \mid J \setminus j \cup j']^{(t-1)} \notin K_{t-1}$, i.e., there exists a vertex-disjoint path system $\mathcal{Q}$ from I to $J \setminus j \cup j'$ in $\Gamma_B^{(t-1)}(I \mid J \setminus j \cup j')$. Therefore, the path $Q : i \to j'$ in $\mathcal{Q}$ does *not* use vertex (r,s). By considering the appropriate supremums, we may assume without loss of generality that $\mathcal{Q} \setminus Q = \mathcal{P} \setminus P$. Now, since $j' > j$, Q must intersect P in order to end at j'. Since Q cannot have a ⅃-turn at a (r,s) or any larger vertex, the Cauchon condition implies that (r,j') is a white vertex. On the other hand, $\mathcal{P} \setminus P$ is disjoint from both Q and P. If we let R be the path starting at i, equal to Q up to (r,j'), then equal to P until the column vertex j, then R is a path from i to j that does not contain (r,s). Now $(\mathcal{P} \setminus P) \cup R$ is a vertex-disjoint path system in $\Gamma_B^{(t-1)}(I \mid J)$, a contradiction. That a coordinate (i',j) with $i < i' < r$ with $(M)_{i',j} \geq 1$ is critical is proven similarly. This completes the proof of Claim 2.

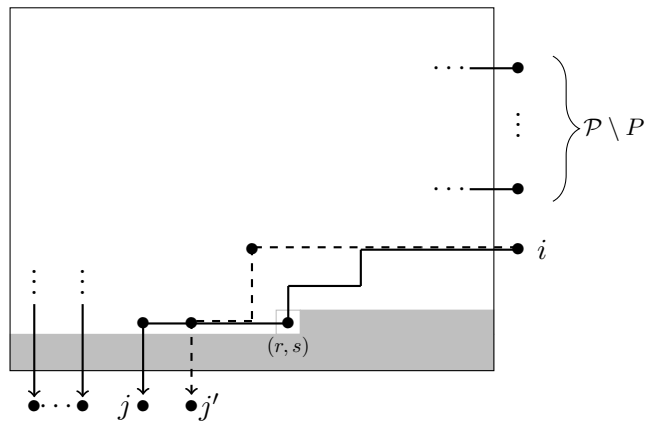

FIGURE 10. Illustration of the idea used in proving Claim 2. In the notation of that proof, the dashed line represents Q and the solid line represents P. The other vertices and partial paths represent $\mathcal{P} \setminus P = \mathcal{Q} \setminus Q$.

To summarize the discussion so far, we have shown that it suffices to assume the following.

- If $[I \mid J]^{(t-1)}$ is a critical minor, then $\Gamma_B^{(t)}(I \mid J) \neq \emptyset$ and every vertex-disjoint path system contains a path with a ⅃-turn at (r, s) (by Part 1 of Claim 1).
- Every critical minor contains a critical coordinate (by Part 2 of Claim 1).
- For each critical coordinate (i, j), there is a critical minor whose maximum coordinate is (i, j) (by definition).
- For each critical coordinate (i, j) (of which there exists at least one), $(M)_{k,\ell} = 0$ for all $i < k \leq r$ and $j < \ell \leq s$ (by Part 3 of Claim 1). In particular, no critical coordinate is northwest of another critical coordinate and so any critical minor contains a *unique* critical coordinate. See Figure 11.
- If (i, j) is northwest of (r, s) and (i, j) is *not* a critical coordinate, then no coordinate above or to its left is critical (by Claim 2).

The remainder of this proof will show that the above list of assumptions leads to a contradiction to the induction hypothesis.

Recalling the notation in Section 4.3, let

$$\ell t(a) = \boldsymbol{x}^M = x_{i_1,j_1} x_{i_2,j_2} \cdots x_{i_p,j_p},$$

and set

$$C = \{k \in [p] \mid (i_k, j_k) \text{ is critical}\},$$

$M =$ 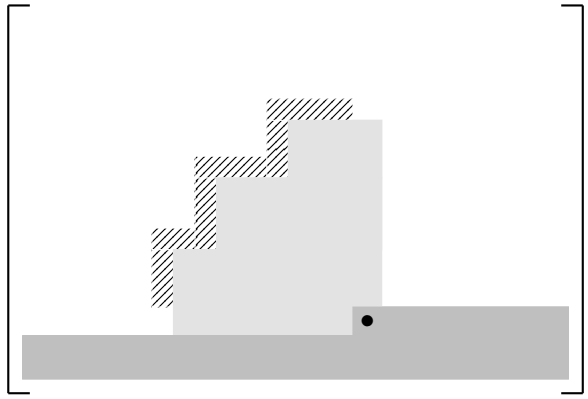

FIGURE 11. Structure of M: The bullet represents coordinate (r, s). All critical coordinates lie in the striped region. All entries in the two regions shaded solid gray are 0.

where C is nonempty (since, by induction, there exists at least one critical minor, which in turn contains a critical coordinate). Consider the monomial

$$\overleftarrow{x}^{C}_{i_1,j_1}\overleftarrow{x}^{C}_{i_2,j_2}\cdots\overleftarrow{x}^{C}_{i_p,j_p}\, y^h_{r,s}.$$

By the assumptions just established, Lemma 4.3.1 and Proposition 4.2.2, the lexicographic expression of this monomial equals

$$q^{\alpha}\boldsymbol{y}^{N_C} + \sum_{L_C\in\mathcal{M}_{m,n}(\mathbb{Z})} \alpha_{L_C}\boldsymbol{y}^{L_C}, \tag{7}$$

for some integer α and with every $L_C \prec N_C$ where

$$(N_C)_{i,j} = \begin{cases} 0, & \text{if } (i,j) \text{ is critical;} \\ (M)_{i,j}, & \text{if } i \neq r,\ j \neq s \text{ and } (i,j) \text{ not critical;} \\ (M)_{i,s} + \sum_{j'}(M)_{i,j'}, & \text{if } i \neq r \text{ and } j = s; \\ (M)_{r,j} + \sum_{i'}(M)_{i',j}, & \text{if } i = r \text{ and } j \neq s; \\ h - |C|, & \text{if } i = r \text{ and } j = s, \end{cases}$$

and where the sum in the case that $i \neq r$ and $j = s$ is over all j' with (i, j') critical, and the sum in the case that $i = r$ and $j \neq s$ is over all i' with (i', j) critical. With respect to Figure 11, the entries in the striped region are 0 in N_C, while entries above (r, s) (respectively to the left of (r, s)) may become nonzero if there is a critical coordinate to the left (respectively above).

Claim 3. *The term $\boldsymbol{y}^{N_C}$ is not divisible by the leading term of any element of G_{t-1}. Consequently, $\boldsymbol{y}^{N_C}$ is not the leading term of any element of K_{t-1}.*

Proof of Claim 3: To the contrary, suppose that $\boldsymbol{y}^{N_C}$ is divisible by the leading term of some element in G_{t-1}. Since $(N_C)_{i,j} = (M)_{i,j} = 0$ for every

$(i,j) \geq (r,s)$, this element is a minor

$$[I \mid J]^{(t-1)},$$

where, say,

$$I = (i_1 < \cdots < i_z) \quad \text{and} \quad J = (j_1 < \cdots < j_z).$$

Now, $[I \mid J]^{(t-1)}$ does not contain a critical coordinate since $(N_C)_{i,j} = 0$ for all critical coordinates (i,j). Moreover, we may in this way conclude that $\boldsymbol{y}^M$ is not divisible by the leading term of $[I \mid J]^{(t-1)}$. By the structure of the entries of N_C compared to M, we then must have that $[I \mid J]^{(t-1)}$ contains a coordinate (i_k, j_k) in which $(N_C)_{i_k,j_k} > 0$ while $(M)_{i,j} = 0$, and so there are only two possibilities: either $(i_k, j_k) = (i_k, s)$ where (i_k, j'_k) is critical for some j'_k, or $(i_k, j_k) = (r, j_k)$ where (i'_k, j_k) is critical for some i'_k. We here show that the former possibility leads to a contradiction. The latter case is dealt with similarly.

Before we begin, we simplify our presentation slightly by further assuming that $(i_k, j_k) = (i_k, s)$ is the maximum coordinate of $[I \mid J]^{(t-1)}$, i.e., that $z = k$. The general case is obtained by simply adding in $i_{k+1}, \ldots, i_z$ and $j_{k+1}, \ldots, j_z$ to the respective index sets of every minor we consider below.

As $\boldsymbol{y}^M$ is divisible by the leading term of $[I \setminus i_k \mid J \setminus s]^{(t-1)}$ (a minor with no critical coordinate), we have $[I \setminus i_k \mid J \setminus s]^{(t-1)} \notin K_{t-1}$. So it is well-defined to set

$$\tilde{\mathcal{Q}} = (\tilde{Q}_1, \tilde{Q}_2, \ldots, \tilde{Q}_{k-1})$$

to be the supremum and

$$\mathcal{Q} = (Q_1, Q_2, \ldots, Q_{k-1})$$

to be the infimum of $\Gamma_B^{(t-1)}(I \setminus i_k \mid J \setminus s)$.

Since (i_k, j'_k) is critical for some j'_k, there exists, by Claim 1, a critical quantum minor $[I' \mid J']^{(t-1)}$ where, for a (possibly nonpositive) integer α, we write

$$I' = (i'_\alpha < i'_{\alpha+1} < \cdots < i'_k = i_k) \quad \text{and} \quad J' = (j'_\alpha < j'_{\alpha+1} < \cdots < j'_k).$$

Set

$$\tilde{\mathcal{P}} = (\tilde{P}_\alpha, \ldots, \tilde{P}_k)$$

to be the supremum and

$$\mathcal{P} = (P_\alpha, \ldots, P_k)$$

to be the infimum of $\Gamma_B^{(t)}(I' \mid J')$. By Claim 1, P_k is a path from i'_k to j'_k in which (r,s) is a ɹ-turn.

The constructions to follow will show that if $\alpha \leq 1$, then we can construct a vertex-disjoint path system

$$\mathcal{R}_1 \in \Gamma_B^{(t-1)}(I \mid J),$$

or, if $\alpha > 1$, a vertex-disjoint path system

$$\mathcal{R}'_\alpha \in \Gamma_B^{(t-1)}(I' \mid J').$$

As both $\Gamma_B^{(t-1)}(I \mid J)$ and $\Gamma_B^{(t-1)}(I' \mid J')$ were assumed to be empty sets, either case will establish a contradiction and so complete the proof of Claim 3. The construction is fairly intricate so we first give an indication on how we plan to proceed. For $\ell \in [k]$, let $I_\ell = (i_\ell < \cdots < i_k)$ and $J_\ell = (j_\ell < \cdots j_k)$. Define I'_ℓ and J'_ℓ for $\alpha \leq \ell \leq k$ similarly. The first step is to build a vertex-disjoint path system $\mathcal{R}_k \in \Gamma_B^{(t-1)}(I_k \mid J_k)$ using $\mathcal{Q}$. If $k = 1$, then we are done. Otherwise, we use $\mathcal{R}_k$ to build $\mathcal{R}'_k \in \Gamma_B^{(t-1)}(I'_k \mid J'_k)$. Again, if $\alpha = k$, then we are done. Now suppose we have found $\mathcal{R}_{\ell+1} \in \Gamma_B^{(t-1)}(I_{\ell+1} \mid J_{\ell+1})$ and $\mathcal{R}'_{\ell+1} \in \Gamma_B^{(t-1)}(I_{\ell+1} \mid J_{\ell+1})$ and that $\ell + 1 > \max(1, \alpha)$. We will show how to construct $\mathcal{R}_\ell \in \Gamma_B^{(t-1)}(I_\ell \mid J_\ell)$ using $\mathcal{R}_{\ell+1}$ and $\mathcal{R}'_{\ell+1}$. If $\ell = 1$ we are done. Otherwise, we construct $\mathcal{R}'_\ell \in \Gamma_B^{(t-1)}(I'_\ell \mid J'_\ell)$ using $\mathcal{R}'_{\ell+1}$ and the just constructed $\mathcal{R}_\ell$. If $\ell = \alpha$ we are then done, otherwise we repeat the above, eventually ending with the desired vertex-disjoint path systems.

Now we give the promised details of the previous paragraph, beginning with the construction $\mathcal{R}_k$. Recall that $P_k \in \mathcal{P}$ has a subpath starting at row vertex $i'_k = i_k$ and ending at vertex (r, s). Define Q_k to be this subpath followed by the vertical path from (r, s) to column vertex s. For the purposes of the construction, set $v_k^0 = i_k$, $v_k^1 = (r, s)$, and note that v_k^0 is the first vertex that P_k and Q_k have in common, while v_k^1 is the last vertex they have in common. If one sets $R_k = Q_k$, then note that we (trivially) have: $R_k = Q_k$ from i_k to v_k^0; $R_k = U(P_k, Q_k)$ from v_k^0 to v_k^1; and $R_k = Q_k$ from v_k^1 to $j_k = s$. See Figure 12.

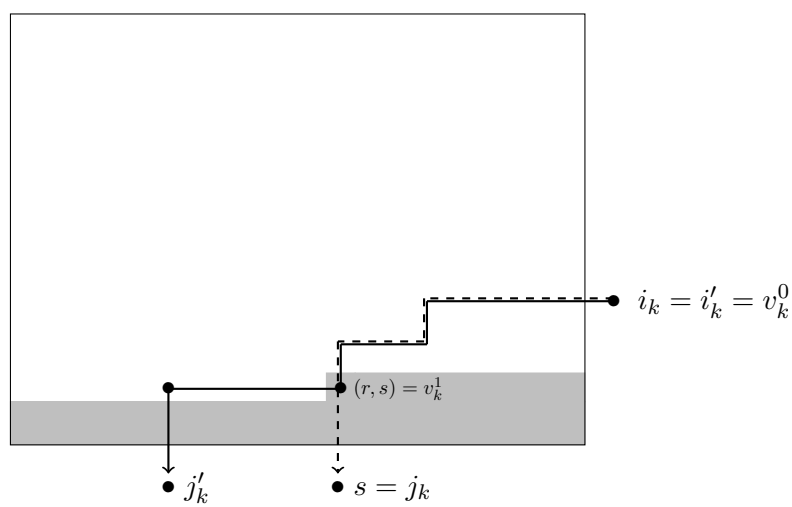

FIGURE 12. Construction of Q_k (dashed) from P_k (solid) in the proof of Claim 3.

Set $\mathcal{R}_k = (R_k)$. Of course, $\mathcal{R}_k$ is a vertex-disjoint path system from i_k to j_k in $\Gamma_B^{(t-1)}(I_k \,|\, J_k)$. If $k = 1$, then we are done, so we may assume $k > 1$.

In order to construct $\mathcal{R}'_k$, we first need to prove that $j_{k-1} \geq j'_k$. To the contrary, suppose $j_{k-1} < j'_k$, and consider

$$[I \,|\, J \setminus s \cup j'_k]^{(t-1)}.$$

If $[I \,|\, J \setminus s \cup j'_k]^{(t-1)} \in K_{t-1}$, then it is critical and so there exists a vertex-disjoint path system from I to $J \setminus s \cup j'_k$ with the path from i_k to j'_k containing a ⅃-turn at (r, s). But just as in the construction of Q_k above, we may replace this path with a path from i_k to s, thereby producing a vertex-disjoint path system from I to J in the empty set $\Gamma_B^{(t-1)}(I \,|\, J)$, which is absurd. Next, suppose $[I \,|\, J \setminus s \cup j'_k]^{(t-1)} \notin K_{t-1}$, so that there does exist a vertex-disjoint path system from I to $J \setminus s \cup j'_k$ where the path $Q' : i_k \to j'_k$ does not contain a ⅃-turn at (r, s). We may take this path system to be

$$(\tilde{Q}_1, \ldots, \tilde{Q}_{k-1}, Q').$$

Now $\tilde{Q}_{k-1}$ is disjoint from Q', and so disjoint from $L(Q', P_k)$ by the lemma that is analogous to Lemma 4.1.14. But this latter path contains (r, s) (since P_k does) and so we may replace Q' with a path from i_k to s, thereby again impossibly producing a vertex-disjoint path system in the empty set $\Gamma_B^{(t-1)}(I \,|\, J)$. We can therefore conclude that $j_{k-1} \geq j'_k$.

As $k > 1$, consider Q_{k-1}, which, in particular, does not contain (r, s). Now, Q_{k-1} must intersect Q_k at a vertex coming before (r, s) on Q_k, as otherwise $\mathcal{Q} \cup Q_k \in \Gamma_B^{(t-1)}(I \,|\, J)$. Let w_k^0 be the first such common vertex. On the other hand, since $j_{k-1} \geq j'_k$ and Q_{k-1} goes above (r, s), Q_{k-1} must also share with P_k at least one vertex after (r, s). Let w_k^1 be the last vertex that Q_{k-1} and P_k share. See Figure 13.

Define R'_k to be the path that equals P_k from i'_k to w_k^0, then equals $U(Q_{k-1}, P_k)$ from w_k^0 to w_k^1, and then equals P_k from w_k^1 to j'_k. Observe that R'_k does not contain (r, s), so that

$$\mathcal{R}'_k = (R'_k)$$

is a vertex-disjoint path system in $\Gamma_B^{(t-1)}(I'_k \,|\, J'_k)$. If $k = \alpha$, then again we have obtained the desired contradiction, and so we may assume $\alpha < k$.

Now let ℓ be an integer with $\max(\alpha, 1) \leq \ell < k$. Assume that $i_{\ell+1} \leq i'_{\ell+1}$, $j_\ell \geq j'_{\ell+1}$ and that we have the following data.

- We have a $\mathcal{R}_{\ell+1} = (R_{\ell+1}, \ldots, R_k) \in \Gamma_B^{(t-1)}(I_{\ell+1} \,|\, J_{\ell+1})$. Moreover, there exists a vertex $v_{\ell+1}^0$ which is the first vertex that $P_{\ell+1}$ and $Q_{\ell+1}$ have in common, a vertex $v_{\ell+1}^1$ which is the last vertex that $P_{\ell+1}$ and $Q_{\ell+1}$ have in common, and $R_{\ell+1}$ equals $Q_{\ell+1}$ from $i_{\ell+1}$ to $v_{\ell+1}^0$, equals $U(P_{\ell+1}, Q_{\ell+1})$ from $v_{\ell+1}^0$ to $v_{\ell+1}^1$, and equals $Q_{\ell+1}$ from $v_{\ell+1}^1$ to $j_{\ell+1}$.

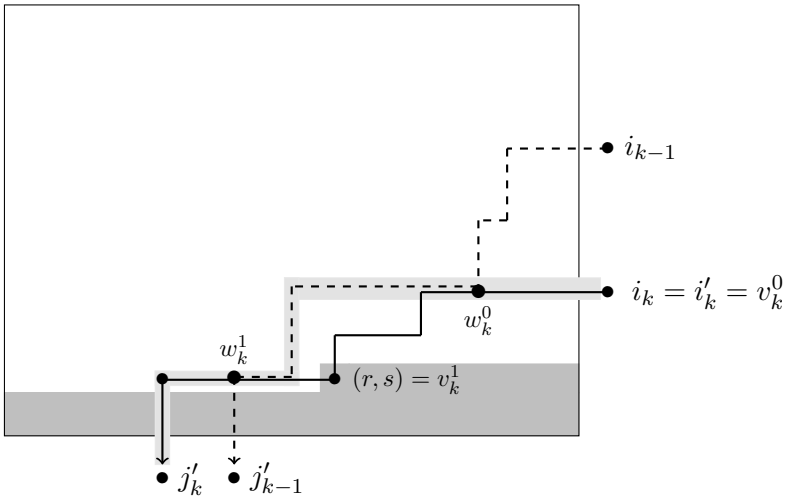

FIGURE 13. Q_{k-1} is the dashed path, P_k is the solid path, R'_k is the shadowed path.

- We have a $\mathcal{R}'_{\ell+1} = (R'_{\ell+1}, \ldots, R'_k) \in \Gamma_B^{(t-1)}(I'_{\ell+1} \,|\, J'_{\ell+1})$. Moreover, there exists a vertex $w^0_{\ell+1}$ which is the first vertex that $P_{\ell+1}$ and Q_ℓ have in common, a vertex $w^1_{\ell+1}$ which is the last vertex that $P_{\ell+1}$ and Q_ℓ have in common, and $R'_{\ell+1}$ equals $P_{\ell+1}$ from $i'_{\ell+1}$ to $w^0_{\ell+1}$, equals $U(P_{\ell+1}, Q_\ell)$ from $w^0_{\ell+1}$ to $w^1_{\ell+1}$, and equals $P_{\ell+1}$ from $w^1_{\ell+1}$ to $j'_{\ell+1}$.

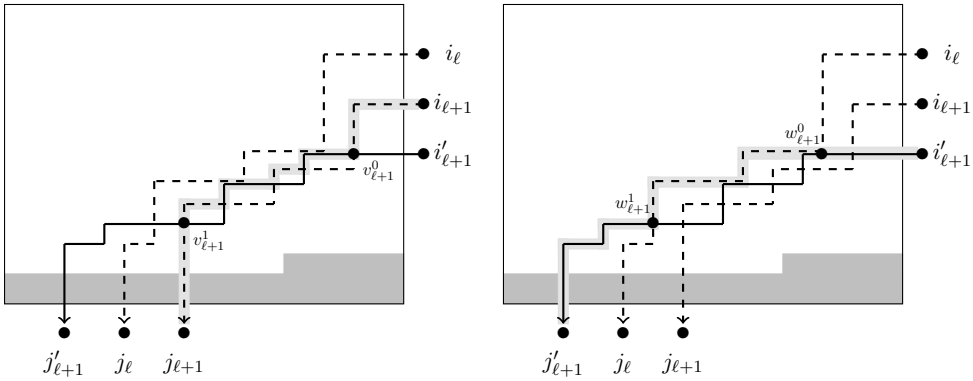

FIGURE 14. $R_{\ell+1}$ is shaded path on the left diagram; $R'_{\ell+1}$ is shaded path on the right diagram.

We will construct a path $R_\ell : i_\ell \to j_\ell$ disjoint from $R_{\ell+1}$, but first we need to show that $i_\ell \leq i'_\ell$. Suppose that $i_\ell > i'_\ell$. Since $j_\ell \geq j'_{\ell+1} > j'_\ell$, we

may consider the minor

$$[I'' \mid J'']^{(t-1)} = [i'_\alpha, \dots, i'_\ell, i_\ell, \dots, i_{k-1} \mid j'_\alpha, \dots, j'_\ell, j_\ell, \dots, j_{k-1}]^{(t-1)}.$$

Note that this minor does not contain a critical coordinate since $[I \mid J]^{(t-1)}$ doesn't and (i_k, j_k) is the unique critical coordinate in $[I' \mid J']^{(t-1)}$. But as $\boldsymbol{y}^M$ is divisible by the leading term of $[I'' \mid J'']^{(t-1)}$, we know that $[I'' \mid J'']^{(t-1)}$ is not in K_{t-1}, i.e., $\Gamma_B^{(t-1)}(I'' \mid J'')$ is nonempty.

Indeed, $(\tilde{P}_1, \dots, \tilde{P}_\ell, Q_\ell, \dots, Q_{k-1}) \in \Gamma_B^{(t-1)}(I'' \mid J'')$, since for any path system in $\Gamma_B^{(t-1)}(I'' \mid J'')$ we choose, the sub-path system from $\{i'_1, \dots, i'_\ell\}$ to $\{j'_1, \dots, j'_\ell\}$ may be replaced with the supremum of

$$\Gamma_B^{(t-1)}(i'_1, \dots, i'_\ell \mid j'_1, \dots, j'_\ell),$$

and the sub-path system from $\{i_\ell, \dots, i_{k-1}\}$ to $\{j_\ell, \dots, j_{k-1}\}$ with the infimum of

$$\Gamma_B^{(t-1)}(i_\ell, \dots, i_{k-1} \mid j_\ell, \dots, j_{k-1}).$$

These two sets are, of course, $(\tilde{P}_1, \dots \tilde{P}_\ell)$ and $(Q_\ell, \dots, Q_{k-1})$ respectively. In particular, this implies $\tilde{P}_\ell$ is disjoint from both Q_ℓ. But $\tilde{P}_\ell$ is also disjoint from $P_{\ell+1}$. By the construction of $R'_{\ell+1}$, it follows that $\tilde{P}_\ell$ and $R'_{\ell+1}$ are also disjoint, so that

$$\{\tilde{P}_1, \dots, \tilde{P}_\ell\} \cup \mathcal{R}'_{\ell+1}$$

forms a vertex-disjoint path system in the empty set $\Gamma_B^{(t-1)}(I \mid J)$. Since this is an impossibility, it must be the case that $i_\ell \le i'_\ell$.

Next, we construct $\mathcal{R}_\ell$. Recall that $R'_{\ell+1}$ has a first vertex $w^0_{\ell+1}$ that is common to $P_{\ell+1}$ and Q_ℓ. On the other hand, since P_ℓ and $P_{\ell+1}$ are disjoint and $i_\ell \le i'_\ell < i'_{\ell+1}$, it must be the case that $P_{\ell+1}$ intersects Q_ℓ. Let v^0_ℓ be the first vertex they have in common and note that v^0_ℓ comes before $w^0_{\ell+1}$ on Q_ℓ. See Figure 15 for an example.

Next, observe that P_ℓ must also intersect Q_ℓ at a vertex coming after $w^0_{\ell+1}$. This is the case since otherwise, P_ℓ is disjoint from $R'_{\ell+1}$ after $w^0_{\ell+1}$. But by the construction of $R'_{\ell+1}$, we would then have $(P_1, \dots, P_\ell) \cup \mathcal{R}'_\ell$, a vertex-disjoint path system in the empty set $\Gamma_B^{(t-1)}(I' \mid J')$. So, let v^1_ℓ be the last vertex that Q_ℓ and P_ℓ have in common. Define R_ℓ as the path equal to Q_ℓ from i_ℓ to v^0_ℓ, equal to $U(P_\ell, Q_\ell)$ from v^0_ℓ to v^1_ℓ, and then equal to Q_ℓ from v^1_ℓ to j_ℓ. Since Q_ℓ is disjoint from $Q_{\ell+1}$ up to v^0_ℓ and after v^1_ℓ, and $U(P_\ell, Q_\ell)$ is disjoint from $U(P_{\ell+1}, Q_{\ell+1})$, we see that R_ℓ is disjoint from $R_{\ell+1}$, and so

$$\mathcal{R}_\ell = \mathcal{R}_{\ell+1} \cup R_\ell \in \Gamma_B^{(t-1)}(i_\ell, \dots, i_k \mid j_\ell, \dots, j_k).$$

If $\ell = 1$, then we have obtained the required path system completing the proof of this claim.

Assume $\ell > 1$. To construct $\mathcal{R}'_\ell$, we first must show that $j_{\ell-1} \ge j'_\ell$. To the contrary, suppose that $j_{\ell-1} < j'_\ell$ Now, $i_{\ell-1} < i_\ell \le i'_\ell$, so we may consider the minor

$$[I''' \mid J''']^{(t-1)} = [i_1, \dots, i_{\ell-1}, i'_\ell, \dots, i'_k \mid j_1, \dots, j_{\ell-1}, j'_\ell, \dots, j'_k]^{(t-1)}.$$

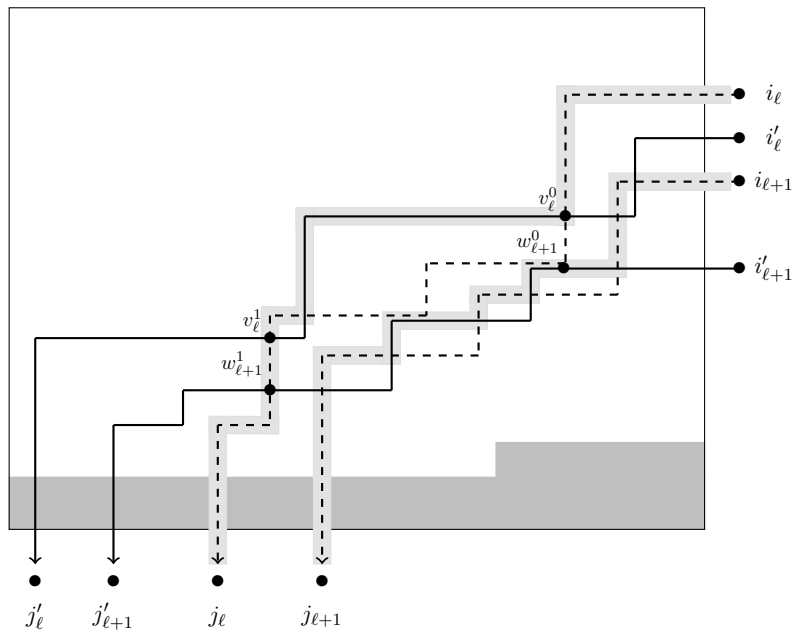

FIGURE 15. Constructing R_ℓ (upper shaded path). Note that it is disjoint from $R_{\ell+1}$ (lower shaded path).

Since $\boldsymbol{y}^M$ is divisible by the leading term of $[I''' \,|\, J''']^{(t-1)}$, there are two possibilities. If $[I''' \,|\, J''']^{(t-1)}$ is in K_{t-1}, then it is a critical minor, and so there is a vertex-disjoint path system in

$$\Gamma_B^{(t)}(i_1, \ldots, i_{\ell-1}, i'_\ell, \ldots, i'_k \,|\, j_1, \ldots, j_{\ell-1}, j'_\ell, \ldots, j'_k),$$

which we may take to be

$$(\tilde{Q}_1, \ldots, \tilde{Q}_{\ell-1}, P_\ell, \ldots, P_k).$$

Therefore, $\tilde{Q}_{\ell-1}$ is disjoint from both P_ℓ and Q_ℓ, and so disjoint from R_ℓ by the latter path's construction. Hence, $(\tilde{Q}_1, \ldots, \tilde{Q}_{\ell-1}) \cup \mathcal{R}_\ell$ is a vertex-disjoint path system in the empty set $\Gamma_B^{(t-1)}(I \,|\, J)$, an impossibility. The other possibility is that $[I''' \,|\, J''']^{(t-1)}$ is not in K_{t-1}. This possibility is dealt with in a manner similar to the above when we justified the inequality $j_{k-1} \geq j'_k$. It follows that $j_{\ell-1} \geq j'_\ell$.

We now describe the construction of R'_ℓ. Since $\ell > 1$, consider $Q_{\ell-1}$. This path is disjoint from Q_ℓ. If $Q_{\ell-1}$ does not intersect P_ℓ at a vertex between v^0_ℓ and v^1_ℓ, then $Q_{\ell-1}$ is disjoint from R_ℓ so that $(Q_1, \ldots, Q_{\ell-1}) \cup \mathcal{R}_\ell$ is a vertex-disjoint path system in the empty set $\Gamma_B^{(t-1)}(I \,|\, J)$, an impossibility. So we may let w^0_ℓ be the first vertex that $Q_{\ell-1}$ shares with P_ℓ. Now, since $j'_\ell \leq j_{\ell-1} < j_\ell$, and the two subpaths of P_ℓ and Q_ℓ starting at v^1_ℓ, together with the line from j'_ℓ to j_ℓ is a closed curve in the plane, $Q_{\ell-1}$ must intersect

P_ℓ at a vertex after v_ℓ^1. Let w_ℓ^1 be their last common vertex after v_ℓ^1. We now take R'_ℓ to be the path equal to P_ℓ from i'_ℓ to w_ℓ^0; equal to $U(P_\ell, Q_{\ell-1})$ from w_ℓ^0 to w_ℓ^1; and equal to P_ℓ from w_ℓ^1 to j'_ℓ. See Figure 16 for an example. That R'_ℓ is disjoint from $R'_{\ell+1}$ is seen similarly as when we showed that R_ℓ and $R_{\ell+1}$ are disjoint.

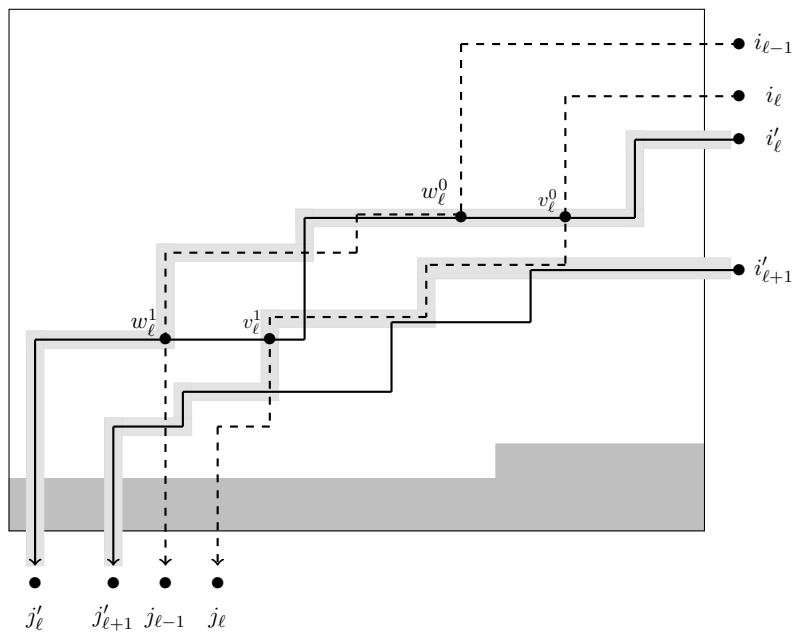

FIGURE 16. Constructing R'_ℓ (upper shaded path). Note that it is disjoint from $R'_{\ell+1}$ (lower shaded path).

Of course, we now take

$$\mathcal{R}'_\ell = \mathcal{R}'_{\ell+1} \cup R'_\ell \in \Gamma_B^{(t-1)}(i'_\ell, \ldots, i'_k \,|\, j'_\ell, \ldots, j'_k).$$

If $\ell = \alpha$, then we are done. Otherwise continue as above. As this process ends when $\ell = \max(\alpha, 1)$, we eventually construct a vertex-disjoint path system in either the empty set $\Gamma_B^{(t-1)}(I \,|\, J)$ or the empty set $\Gamma_B^{(t-1)}(I' \,|\, J')$. This contradiction completes the proof of Claim 3.

Claim 4. *The term $\boldsymbol{y}^{N_C}$ from Expression 7 is a lex term of $b = \overleftarrow{a}\, y_{r,s}^h$.*

Proof of Claim 4: Recall that a lexicographic term is said to be a *lex term* of an element of $A^{(t-1)}$ or $A^{(t)}$ if it has a nonzero coefficient in the lexicographic expression of that element.

We have already seen that $\boldsymbol{y}^{N_C}$ is a lex term of

$$\overleftarrow{x}^{C}_{i_1,j_1} \overleftarrow{x}^{C}_{i_2,j_2} \cdots \overleftarrow{x}^{C}_{i_p,j_p}\, y_{r,s}^h.$$

We will show that this is, in fact, the unique appearance of $\boldsymbol{y}^{N_C}$ in (the lexicographic expression of) any summand of

$$b = \overleftarrow{a}\, y^h_{r,s} = \overleftarrow{\boldsymbol{x}^M} y^h_{r,s} + \sum_L \alpha_L \overleftarrow{\boldsymbol{x}^L} y^h_{r,s},$$

and so is a lex term of b.

To start, consider in $\overleftarrow{\boldsymbol{x}^M} y^h_{r,s}$ the lexicographic expression of some

$$\overleftarrow{x^{C'}_{i_1,j_1}} \overleftarrow{x^{C'}_{i_2,j_2}} \cdots \overleftarrow{x^{C'}_{i_p,j_p}}\, y^h_{r,s} = \sum_{L_{C'} \in \mathcal{M}_{m,n}(\mathbb{Z})} \alpha_{L_{C'}} \boldsymbol{y}^{L_{C'}},$$

where $C' \neq C$. Suppose C' is chosen so that there is an $L_{C'}$ equal to N_C.

Now, by Lemma 4.3.1, each term $\boldsymbol{y}^{L_{C'}}$ satisfies $(L_{C'})_{r,s} = h - |C'|$. Since $(N_C)_{r,s} = h - |C|$, we must have if $|C'| = |C| > 0$. But, since $C \neq C'$, there must exist $k \in C'$ such that (i_k, j_k) is not a critical coordinate. Since (i_k, j_k) is not critical, we should have

$$\begin{aligned}(L_{C'})_{i_k,j_k} &= (N_C)_{i_k,j_k} \\ &= (M)_{i_k,j_k} \\ &> (M)_{i_k,j_k} - |\{k' \in C' \mid (i_{k'}, j_{k'}) = (i_k, j_k)\}|.\end{aligned}$$

By Part 4 of Lemma 4.3.1, there is a coordinate (i_k, j) with $j < j_k$ and

$$\begin{aligned}(L_{C'})_{i_k,j} &< (M)_{i_k,j} \\ &= (N_C)_{i_k,j},\end{aligned}$$

where the equality follows from the fact that since (i_k, j_k) is not critical, neither is (i_k, j) by Claim 2. Hence, $L_{C'}$ cannot be equal to N_C since their entries differ in coordinate (i_k, j). This is a contradiction and so we conclude that $\boldsymbol{y}^{N_C}$ is a lex term of $\overleftarrow{\boldsymbol{x}^M} y^h_{r,s}$.

Next, suppose

$$\boldsymbol{x}^L = x_{a_1,b_1} \cdots x_{a_t,b_t},$$

appears in a, where $(a_k, b_k) \leq (a_{k+1}, b_{k+1})$ for each $k \in [t-1]$, and where $L \prec M$ at coordinate (i, j). With the notation of Section 4.3, consider

$$\overleftarrow{\boldsymbol{x}^L} y^h_{r,s} = \sum_D q^{|D|}\, \overleftarrow{x^D_{a_1,b_1}} \overleftarrow{x^D_{a_2,b_2}} \cdots \overleftarrow{x^D_{a_t,b_t}}\, y^h_{r,s}.$$

Suppose that $\boldsymbol{y}^{N_C}$ appears in

$$\overleftarrow{x^D_{a_1,b_1}} \overleftarrow{x^D_{a_2,b_2}} \cdots \overleftarrow{x^D_{a_t,b_t}}\, y^h_{r,s} = \sum_{L_D} \alpha_{L_D} \boldsymbol{y}^{L_D}.$$

By Lemma 4.3.1, Part 5, every entry in an L_D with coordinates not northwest, north or west of (r, s) must equal the corresponding entry in L. Since we also require $L_D = N_C$ for some D, this implies that those entries are equal to the corresponding entry in M as well. Thus, (i, j) can only be north, west or northwest of (r, s). On the other hand, if $j = s$, then all entries

in L and M in row i except coordinate (i,j) are equal. By homogeneity, this means that we must also have $(L)_{i,j} = (M)_{i,j}$, a contradiction. Hence (i,j) is not north of (r,s), and by similar reasoning (i,j) is not west of (r,s). Therefore, we may assume that $L \prec M$ at a coordinate (i,j) northwest of (r,s).

There are two cases to consider. First, suppose (i,j) is not a critical coordinate. In this case,

$$(N_C)_{i,j} = (M)_{i,j} > (L)_{i,j},$$

and so we may proceed as above by applying Part 4 of Lemma 4.3.1 to see that in order to have $(L_D)_{i,j} = (N_C)_{i,j}$, we would require an entry with coordinate (i,j') with $j' < j$ to satisfy

$$\begin{aligned}(L_D)_{i,j'} &< (L)_{i,j'} \\ &= (M)_{i,j'} \\ &= (N_C)_{i,j'}.\end{aligned}$$

Hence we cannot have $N_C = L_D$ in this case.

Next, suppose (i,j) is critical. Let (i,j_0) be the least critical coordinate in row i. Notice that no $(i,j') = (a_k,b_k)$ with $j' < j_0$ has $k \in D$, for reasons similar to the previous paragraph. Now, consider j' where $j_0 < j' \leq s$. By Part 3 of Claim 1 applied to (i,j_0), we know that every entry of M south of (i,j') is equal to zero. Hence, the sum of the entries in column j' of M is equal to $\sum_{i'=1}^{i}(M)_{i',j'}$. By homogeneity, this is equal to the sum of the entries in column j' of L. On the other hand, the entries north of (i,j') in L are equal to the corresponding entries in M. Since all entries of L are nonnegative, we see that

$$(L)_{i,j'} \leq (M)_{i,j'},$$

for every $j_0 < j' \leq s$. Also, since the entries of L and M are equal prior to (i,j_0) and $L \prec M$, we must also have $(L)_{i,j_0} \leq (M)_{i,j_0}$. But, since we know that $(L)_{i,j} < (M)_{i,j}$, applying Part 3 of Lemma 4.3.1 gives

$$\begin{aligned}(L_D)_{i,s} &= (L)_{i,s} + |\{k \in D \mid i_k = i\}| \\ &\leq (L)_{i,s} + \sum_{j'=j_0}^{s} (L)_{i,j'} \\ &< (M)_{i,s} + \sum_{j'=j_0}^{s} (M)_{i,j'} \\ &= (N_C)_{i,s}.\end{aligned}$$

Hence, we cannot have $L_D = N_C$ in this case either, and so this completes the proof of Claim 4.

Claim 5. *There exists an element of K_{t-1} for which $\boldsymbol{y}^{N_C}$ is the leading term.*

Note that Claims 3 and 5 are incompatible, thus providing the required contradiction to the assumptions on the entries of M and completing the proof of Theorem 4.4.1.

Proof of Claim 5: By Lemma 3.3.4, we may write

$$b = \sum_{i=0}^{\infty} b_i y_{r,s}^i,$$

where finitely many $b_i \neq 0$ and each $b_i \in K_{t-1}$ with lexicographic expression using only generators with coordinates less than (r, s).

By Claim 4, $\boldsymbol{y}^{N_C}$ is a lex term of b and so, since $(N_C)_{r,s} = h - |C|$, it is a lex term of

$$z_0 = b_{h-|C|} y_{r,s}^{h-|C|}.$$

Suppose, for a positive integer k, that we have constructed an element $z_{k-1} \in K_{t-1}$ in which $\boldsymbol{y}^{N_C}$ is a lex term. Moreover, suppose any lex term of z_{k-1} that is greater than $\boldsymbol{y}^{N_C}$, also is a lex term of z_0. If $\ell t(z_{k-1}) = \boldsymbol{y}^{N_C}$, then we have found the required element of K_{t-1}. Otherwise, we construct below an element $z_k \in K_{t-1}$ with the same properties as z_{k-1}, but in which there are fewer lex terms greater than $\boldsymbol{y}^{N_C}$. Since there are only finitely many lex terms of z_0 that are greater than $\boldsymbol{y}^{N_C}$, this process must end after finitely many steps, resulting in an element of K_{t-1} whose leading term is $\boldsymbol{y}^{N_C}$, as required.

Let

$$\ell t(z_{k-1}) = \boldsymbol{y}^L \succ \boldsymbol{y}^{N_C},$$

so that for some $\gamma_L, \gamma_{N_C} \in \mathbb{K}^*$ we may write

$$z_{k-1} = \gamma_L \boldsymbol{y}^L + \gamma_{N_C} \boldsymbol{y}^{N_C} + z'_{k-1}.$$

In particular, observe that in z'_{k-1}, there are fewer lex terms greater than $\boldsymbol{y}^{N_C}$ than in z_{k-1}. Also, $\boldsymbol{y}^L \prec \boldsymbol{y}^M y_{r,s}^h$ since the latter term is the leading term of b but $\boldsymbol{y}^L \in b_{h-|C|} y_{r,s}^{h-|C|} \neq b_h y_{r,s}^h$ since $|C| > 0$. Finally, for $i \in [r-1]$, let C_i denote the critical coordinates in row i.

Let i_0 be the least index such that $C_i = C_{i_0}$ is non-empty. Let (c_0, d_0) be the least coordinate in C_{i_0}. Since $\boldsymbol{y}^{N_C} \prec \boldsymbol{y}^L \prec \boldsymbol{y}^M y_{r,s}^h$ and the entries of N_C and M at coordinates prior to (c_0, d_0) are equal, we have that the entries of L, M and N_C are equal prior to (c_0, d_0) as well.

Suppose $(c_0, d) \in C_{i_0}$ is such that $(L)_{c_0,d} > 0$. In this case, we proceed as follows. Since (c_0, d) is a critical coordinate, there is a critical minor $[I \mid J]^{(t-1)} \in K_{t-1}$ with maximum coordinate (c_0, d) whose leading term divides $\boldsymbol{y}^M$, and so divides $\boldsymbol{y}^L$ by the previous paragraph. By Lemma 4.2.8, we have

$$\boldsymbol{y}^L = q^\alpha [I \mid J]^{(t-1)} \boldsymbol{y}^{L-P_{\mathrm{id}}} + w,$$

where $w \in A^{(t-1)}$ has the property that if $\ell t(w) = \boldsymbol{y}^K$, then $K \prec L$ at an entry northwest of (c_0, d). Since all entries of L northwest of (c_0, d) are equal to those of N_C and M, we have that $\ell t(w) \prec \boldsymbol{y}^{N_C}$ as well.

Hence,

$$\begin{aligned} z_{k-1} &= \gamma_L \boldsymbol{y}^L + \gamma_{N_C} \boldsymbol{y}^{N_C} + z'_{k-1} \\ &= \gamma_L (q^\alpha [I \mid J]^{(t-1)} \boldsymbol{y}^{L-P_{\mathrm{id}}} + w) + \gamma_{N_C} \boldsymbol{y}^{N_C} + z'_{k-1}, \end{aligned}$$

so that if we define

$$\begin{aligned} z_k &= z_{k-1} - \gamma_L q^\alpha [I \mid J]^{(t-1)} \boldsymbol{y}^{L-P_{\mathrm{id}}} \\ &= \gamma_{N_C} \boldsymbol{y}^{N_C} + \gamma_L w + z'_{k-1}, \end{aligned}$$

then we have $z_k \in K_{t-1}$ satisfying the desired properties described above.

Now, suppose each coordinate $(c_0, d) \in C_{i_0}$ is such that $(L)_{c_0,d} = 0$. Thus, L and N_C are equal in all entries prior to (c_0, s). Also, since $\boldsymbol{y}^L$ is a lex term of b, there must be a lex term $\boldsymbol{x}^{L'}$ of a so that $\boldsymbol{y}^L$ is a lex term of $\overleftarrow{\boldsymbol{x}^{L'}} y^h_{r,s}$. We also have $\boldsymbol{x}^{L'} \preceq \boldsymbol{x}^M$, and it follows by Part 2 of Lemma 4.3.1, that the entries in L' and M are equal prior to (c_0, d_0).

Now, as in the proof of Claim 4, we may apply homogeneity to conclude that $(L')_{c_0,d} \leq (M)_{c_0,d}$ for each $(c_0, d) \in C_{i_0}$, and if any of these inequalities are strict, then $(L)_{i_0,s} < (N_C)_{i_0,s}$, contradicting the assumption that $N_C \prec L$. Hence, L' and M have equal entries prior to (c_0, s).

Now, let i_1 be the second least index such that C_{i_1} is nonempty, and consider coordinates from (c_0, s) to $(c_1, d_1)^-$, where (c_1, d_1) is the least coordinate in C_{i-1}. Since $\boldsymbol{y}^{N_C} \prec \boldsymbol{y}^L$, we know that if any entry in L and N_C in these coordinates differ, then the first differing entry is larger in L than in N_C. On the other hand, the entries of N_C and M are equal in this range of coordinates. Thus, if the first differing entry is larger in L than in N_C, then this entry in L' is larger than in M, yet every entry prior in L' is equal to that in M, implying that $\boldsymbol{y}^M \prec \boldsymbol{y}^{L'}$, a contradiction. Hence, the entries in this range of coordinates are equal in N_C, M, L and L'.

Since all entries north-west of a critical coordinate are equal in M, N_C, L and L', we may now repeat the above arguments with the coordinates in C_{i_1}, and subsequent C_i's if necessary. Eventually we must find a critical coordinate with a positive entry in L, as otherwise we would find that $N_C = L$, contradicting the assumption that $\boldsymbol{y}^{N_C} \prec \boldsymbol{y}^L$. Hence, we can always construct the required z_k and, eventually, an element of K_{t-1} with leading term $\boldsymbol{y}^{N_C}$. This completes the proof of Claim 5 and the theorem.

□

4.5. **Conclusions.** The motivating goal of this work was to demonstrate the conjecture of Goodearl and Lenagan that when $q \in \mathbb{K}^*$ is a non-root of unity, an $\mathcal{H}$-prime of $\mathcal{O}_q(\mathcal{M}_{m,n}(\mathbb{K}))$ is generated by the set of quantum minors it contains. That this is true is already immediate corollary of the $t = mn$ case of our Theorem 4.4.1. However, the theorem actually implies

a sharper result since we may consider a *minimal* Gröbner basis for the $\mathcal{H}$-prime. The idea here is simple: if G is a Gröbner basis for an ideal and if $g_1, g_2 \in G$ are such that $\ell t(g_1)$ is divisible by $\ell t(g_2)$, then $G \setminus g_1$ remains a Gröbner basis for the ideal. With respect to $\mathcal{O}_q(\mathcal{M}_{m,n}(\mathbb{K}))$, this means the following. Suppose $[I \mid J]^{(mn)} = [I \mid J]$ is a minor with $I = \{i_1 < i_2 < \cdots < i_k\}$ and $J = \{j_1 < j_2 < \cdots j_k\}$. If $L \subsetneq [k]$, $I' = I \cap \{i_\ell \mid \ell \in L\}$ and $J' = J \cap \{j_\ell \mid \ell \in L\}$, then call $[I' \mid J']$ a *diagonal subminor* of $[I \mid J]$. From the $t = mn$ case of Theorem 4.4.1 we find the following.

Corollary 4.5.1. *If $q \in \mathbb{K}^*$ is a non-root of unity, then every $\mathcal{H}$-prime K of $\mathcal{O}_q(\mathcal{M}_{m,n}(\mathbb{K}))$, is generated, as a right ideal, by those quantum minors in K with no diagonal subminor in K. These quantum minors form a minimal Gröbner basis for K with respect to the matrix lexicographic order.*

In the statement of Corollary 4.5.1, "right ideal" can be replaced by "left ideal" after proving the left ideal version of Theorem 4.4.1.

Example 4.5.2. Let K be the $\mathcal{H}$-prime of $\mathcal{O}_q(\mathcal{M}_{3,4}(\mathbb{K}))$ corresponding to the Cauchon diagram in Figure 17. By using Corollary 4.1.10, we find that the quantum minors in K are

$$\{[123|123], [123|124], [12|12], [13|12], [23|12], [23|13], [23|23]\}.$$

Theorem 4.4.1 says that these form a Gröbner basis for K. However, $[12|12]$ is a diagonal subminor of $[123|123]$ and $[123|124]$. Therefore,

$$\{[12|12], [13|12], [23|12], [23|13], [23|23]\}$$

is a minimal (in fact reduced) Gröbner basis for K.

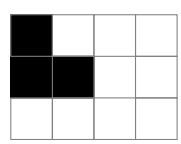

Figure 17

Acknowledgements

Most of this work was completed while the author was a visiting assistant professor at the University of California, Santa Barbara. He remains grateful for the hospitality he received there. The author also thanks Ken Goodearl for many helpful discussions, and Stéphane Launois and Milen Yakimov for thoughtful comments. The anonymous referee made a careful, and very much appreciated, reading of this manuscript, and their suggestions resulted in a highly improved paper.

Appendix

To assist in the reading of this paper, in particular the proof of Theorem 4.4.1, we below provide an index of some terms and notation used throughout this paper.

Coordinates: Beginning of Section 2.
Lexicographic order: Definition 2.1.1.
$(r,s)^{-}$**:** Definition 2.1.1.

Cauchon Diagram: Definitions 2.3.5 and 2.3.7.
$G_B^{m\times n}$**:** (Cauchon graph) Definition 3.1.1.
$\Gamma_B^{(t)}(I\,|\,J)$**:** Definition 4.1.4.
$U(P,Q)$**:** Definition 4.1.11.
$L(P,Q)$**:** Definition 4.1.11.
$U(\mathcal{P},\mathcal{Q})$ **(Supremum):** Definition 4.1.16.
$L(\mathcal{P},\mathcal{Q})$ **(Infimum):** Definition 4.1.17.

$A^{(t)}, A_B^{(t)}$**:** Definition 3.2.1.
x^N**:** Notation 2.1.6.
Lexicographic expression: Definition 2.1.8.
Lex term of: Definition 2.1.8.

$\sigma_B^{(t)}$**:** Definition 3.3.1.
$\overrightarrow{a}$**:** Theorem 2.2.1.
$\overleftarrow{a}$**:** Theorem 2.2.1.
$\overleftarrow{x_{i,j}}^{C}$**:** Lemma 4.3.1 and preceding paragraph.

(Quantum) Minor $[I\,|\,J]_B^{(t)}, [I\,|\,J]^{(t)}, [I\,|\,J]$**:** Definition 4.1.1.
Diagonal coordinate (of a minor): Definition 4.1.3.
Maximum coordinate (of a minor): Definition 4.1.3.

$\prec$**:** Definition 4.2.1.
$\ell t(a)$ **(leading term of** $a\in A^{(t)}$**):** Definition 4.2.6.
Gröbner Basis: Definition 4.2.7.

N_C**:** See Expression (7) just prior to Claim 3 in proof of Theorem 4.4.1.
Critical Minor: A minor in K_{t-1} whose leading term divides $\ell t(b) = \ell t(\overleftarrow{a}\, y_{r,s}^h)$.
Critical Coordinate: A coordinate (i,j) that is northwest of (r,s) such that there exists a critical minor with (i,j) as its maximum coordinate.

References

[1] J. Bell, K. Casteels, and S. Launois, *Enumeration of H-strata in quantum matrices with respect to dimension*, J. Combin. Theory Ser. A **119** (2012), no. 1, 83–98.

[2] K. A. Brown and K. R. Goodearl, *Lectures on algebraic quantum groups*, Advanced Courses in Mathematics. CRM Barcelona, Birkhäuser Verlag, Basel, 2002.

[3] J. L. Bueso, J. Gómez-Torrecillas, and A. Verschoren, *Algorithmic methods in non-commutative algebra: Applications to quantum groups*, Kluwer University Press, 2003.

[4] K. Casteels, *A graph theoretic method for determining generating sets of prime ideals in quantum matrices*, Journal of Algebra **330** (2011), 188–205.

[5] G. Cauchon, *Effacement des dérivations et spectres premiers des algèbres quantiques*, J. Algebra **260** (2003), no. 2, 476–518.

[6] ———, *Spectre premier de $O_q(M_n(k))$: image canonique et séparation normale*, J. Algebra **260** (2003), no. 2, 519–569.

[7] J. Geiger and M. Yakimov, *Quantum schubert cells via representation theory and ring theory*, Michigan Math. J. **63** (2014), no. 1, 123–157.

[8] K. R. Goodearl, S. Launois, and T. H. Lenagan, *Torus-invariant prime ideals in quantum matrices, totally nonnegative cells and symplectic leaves*, Math. Z. **269** (2011), no. 1-2, 29–45.

[9] ———, *Totally nonnegative cells and matrix poisson varieties*, Advances in Mathematics **226** (2011), no. 1, 779– 826.

[10] K. R. Goodearl and T. H. Lenagan, *Prime ideals invariant under winding automorphisms in quantum matrices*, Internat. J. Math. **13** (2002), no. 5, 497–532.

[11] ———, *Winding-invariant prime ideals in quantum 3×3 matrices*, J. Algebra **260** (2003), no. 2, 657–687.

[12] K. R. Goodearl and E. S. Letzter, *Prime and primitive spectra of multiparameter quantum affine spaces*, Trends in ring theory (Miskolc, 1996), CMS Conf. Proc., vol. 22, Amer. Math. Soc., Providence, RI, 1998, pp. 39–58.

[13] ———, *The Dixmier-Moeglin equivalence in quantum coordinate rings and quantized Weyl algebras*, Trans. Amer. Math. Soc. **352** (2000), no. 3, 1381–1403.

[14] T. Lam and L. Williams, *Total positivity for cominiscule grassmannians*, New York Journal of Mathematics **14** (2008), 53–99.

[15] S. Launois, *Generators for $\mathcal{H}$-invariant prime ideals in $\mathcal{O}_q(\mathcal{M}_{m,p}(\mathbb{C}))$*, Proc. Edinb. Math. Soc. (2) **47** (2004), no. 1, 163–190.

[16] ———, *Les idéaux premiers invariants de $\mathcal{O}_q(\mathcal{M}_{m,p}(\mathbb{C}))$*, J. Algebra **272** (2004), no. 1, 191–246.

[17] S. Launois and T. H. Lenagan, *From totally nonnegative matrices to quantum matrices and back, via poisson geometry*, to appear in the Proceedings of the Belfast Workshop on Algebra, Combinatorics and Dynamics 2009.

[18] B. Lindström, *On the vector representations of induced matroids*, Bull. London Math. Soc. **5** (1973), 85–90.

[19] A. Postnikov, *Total positivity, grassmannians, and networks*, 2006, http://arxiv.org/abs/0609764.

[20] Mitsuhiro Takeuchi, *A short course on quantum matrices*, New directions in Hopf algebras, Math. Sci. Res. Inst. Publ., vol. 43, Cambridge Univ. Press, Cambridge, 2002, pp. 383–435.

[21] Kelli Talaska, *Combinatorial formulas for le-coordinates in a totally nonnegative grassmannian*, Journal of Combinatorial Theory, Series A **118** (2011), no. 1, 58–66.

[22] M. Yakimov, *Invariant prime ideals in quantizations of nilpotent Lie algebras*, Proc. Lond. Math. Soc. (3) **101** (2010), no. 2, 454–476.

[23] ———, *A proof of the Goodearl-Lenagan polynormality conjecture*, Int. Math. Res. Not. (2013), no. 9, 2097–2132.

School of Mathematics, Statistics and Actuarial Science, University of Kent, Canterbury, United Kingdom, CT2 7NF