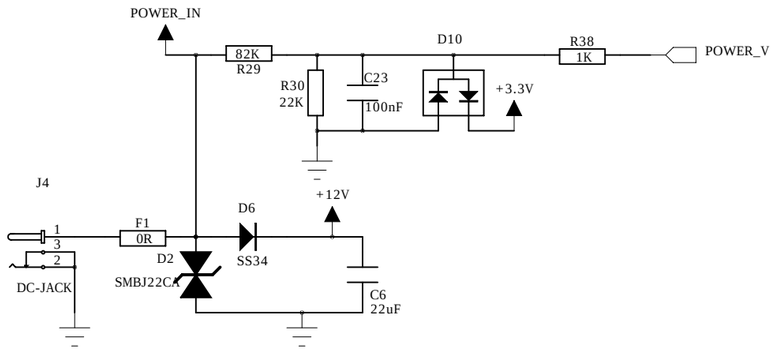
POWER_IN
82K
R29
R30
22K
C23
100nF
D10
R38
1K
POWER_V
+3.3V
J4
F1
0R
D6
SS34
+12V
D2
SMBJ22CA
DC-JACK
C6
22uF

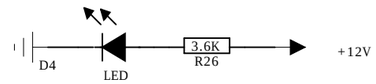
D4
LED
3.6K
R26
+12V

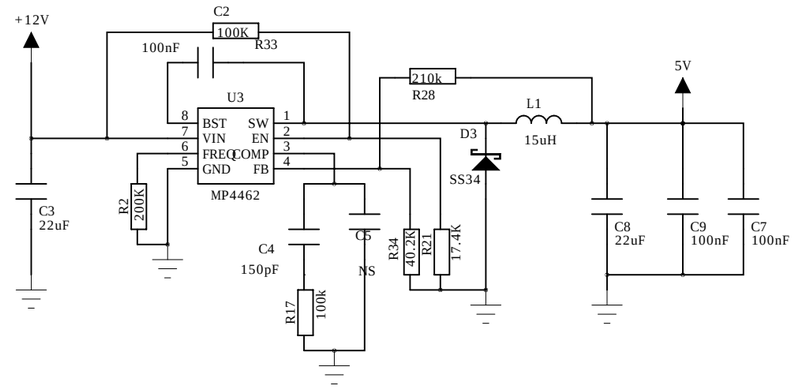
+12V
C2
100K
R33
100nF
U3
BST
VIN
FREQ
GND
SW
EN
COMP
FB
MP4462
210k
R28
L1
15uH
5V
D3
SS34
C3
22uF
R2
200K
C4
150pF
C5
NS
R17
100k
R34
40.2K
R21
17.4K
C8
22uF
C9
100nF
C7
100nF

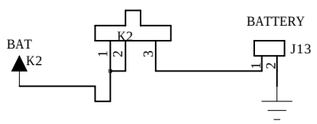
BAT
K2
BATTERY
J13

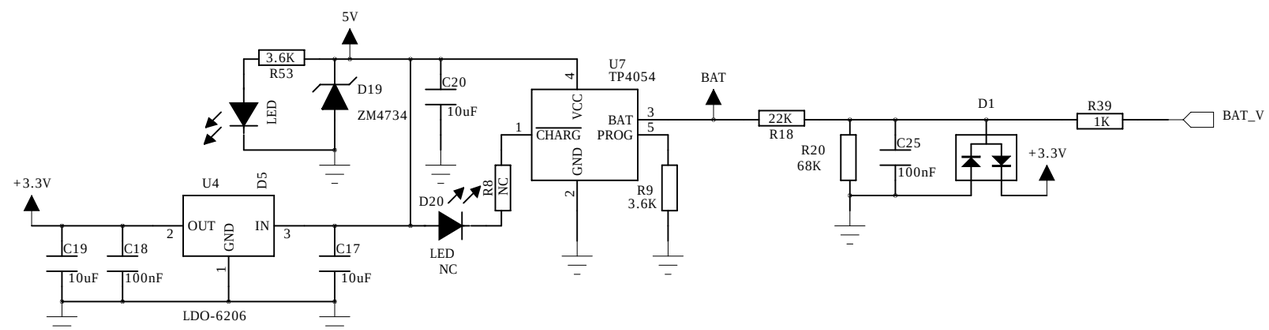
5V
3.6K
R53
LED
D19
ZM4734
C20
10uF
U7
TP4054
VCC
CHARG
BAT
PROG
GND
BAT
22K
R18
R20
68K
C25
100nF
D1
+3.3V
R39
1K
BAT_V
R9
3.6K
+3.3V
U4
D5
OUT
GND
IN
C19
10uF
C18
100nF
C17
10uF
LDO-6206
D20
R8
NC
LED
NC

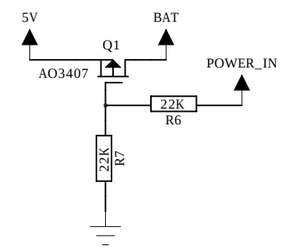
5V
BAT
Q1
AO3407
POWER_IN
22K
R6
22K
R7

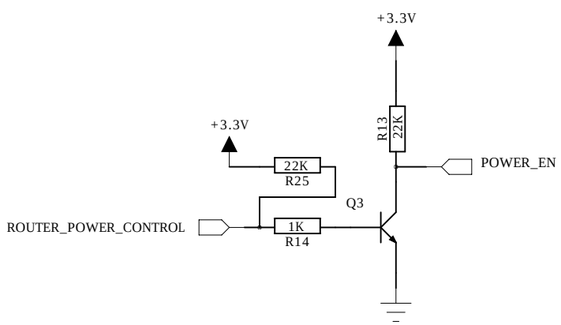
+3.3V
R13
22K
POWER_EN
+3.3V
22K
R25
Q3
ROUTER_POWER_CONTROL
1K
R14

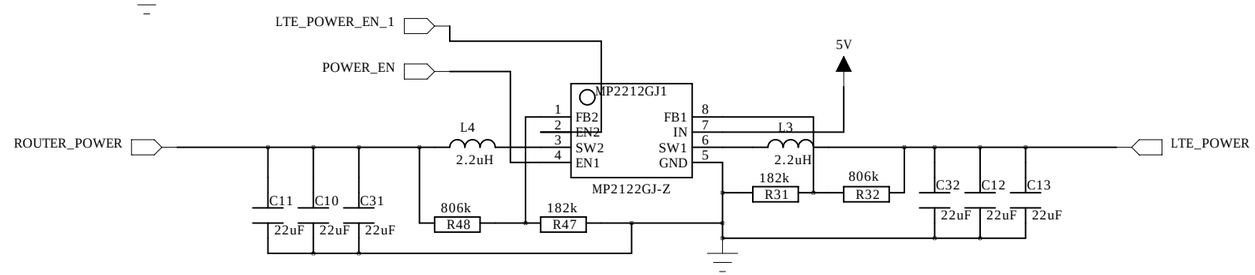
LTE_POWER_EN_1
POWER_EN
MP2212GJ1
FB2
EN2
SW2
EN1
FB1
IN
SW1
GND
MP2122GJ-Z
5V
ROUTER_POWER
L4
2.2uH
L3
2.2uH
LTE_POWER
C11
22uF
C10
22uF
C31
22uF
806k
R48
182k
R47
182k
R31
806k
R32
C32
22uF
C12
22uF
C13
22uF

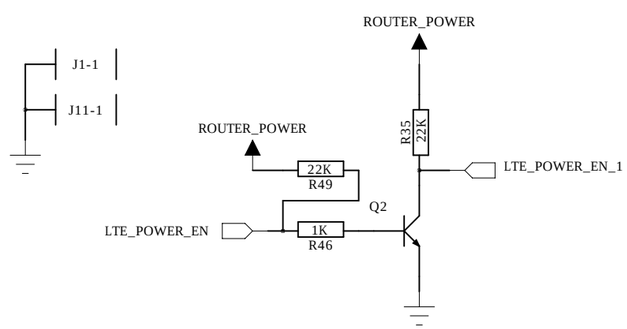
J1-1
J11-1
ROUTER_POWER
R35
22K
LTE_POWER_EN_1
ROUTER_POWER
22K
R49
Q2
LTE_POWER_EN
1K
R46

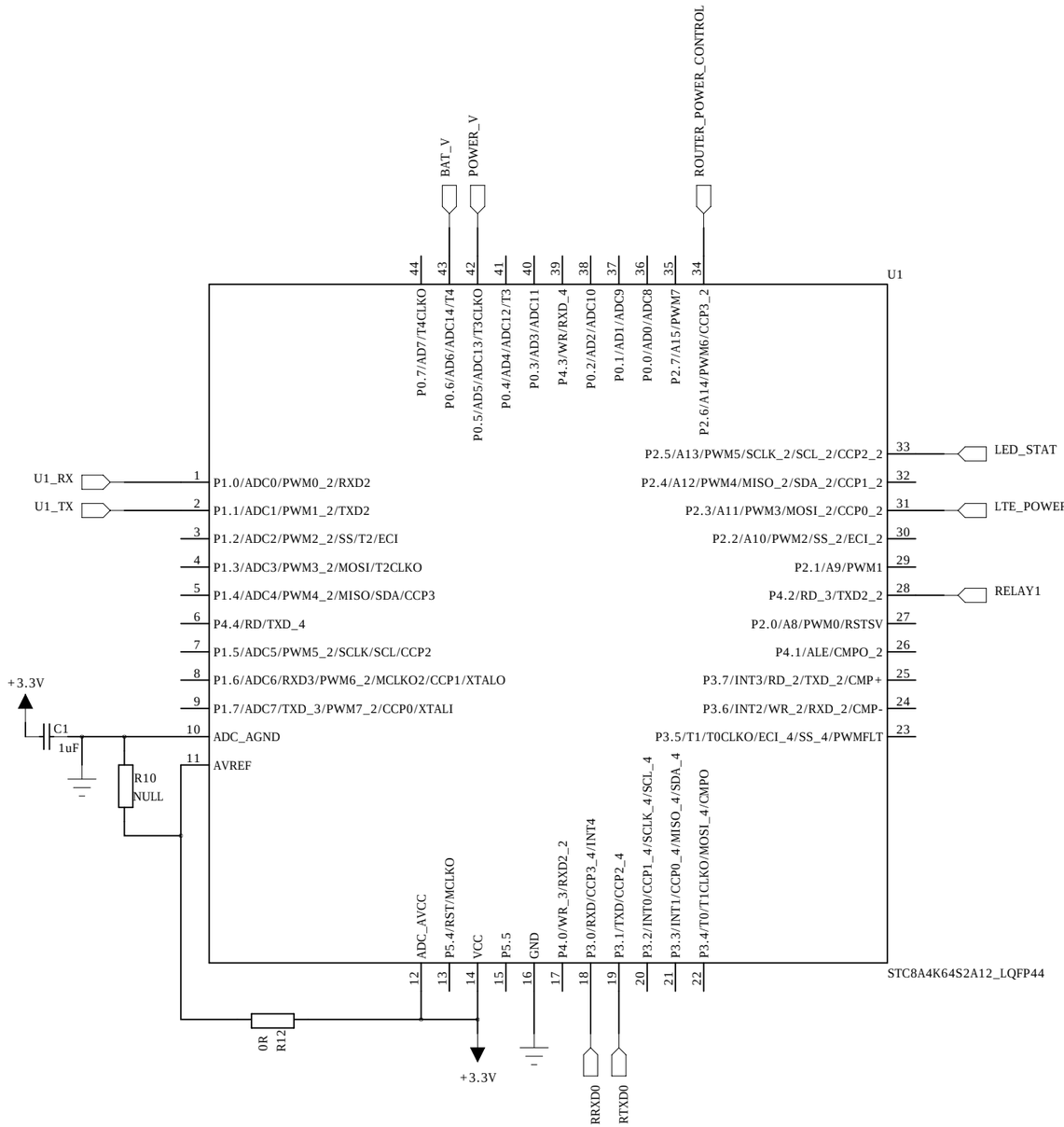
U1
STC8A4K64S2A12_LQFP44
BAT_V
POWER_V
ROUTER_POWER_CONTROL
44 P0.7/AD7/T4CLKO
43 P0.6/AD6/ADC14/T4
42 P0.5/AD5/ADC13/T3CLKO
41 P0.4/AD4/ADC12/T3
40 P0.3/AD3/ADC11
39 P4.3/WR/RXD_4
38 P0.2/AD2/ADC10
37 P0.1/AD1/ADC9
36 P0.0/AD0/ADC8
35 P2.7/A15/PWM7
34 P2.6/A14/PWM6/CCP3_2
U1_RX
U1_TX
1 P1.0/ADC0/PWM0_2/RXD2
2 P1.1/ADC1/PWM1_2/TXD2
3 P1.2/ADC2/PWM2_2/SS/T2/ECI
4 P1.3/ADC3/PWM3_2/MOSI/T2CLKO
5 P1.4/ADC4/PWM4_2/MISO/SDA/CCP3
6 P4.4/RD/TXD_4
7 P1.5/ADC5/PWM5_2/SCLK/SCL/CCP2
8 P1.6/ADC6/RXD3/PWM6_2/MCLKO2/CCP1/XTALO
9 P1.7/ADC7/TXD_3/PWM7_2/CCP0/XTALI
10 ADC_AGND
11 AVREF
33 P2.5/A13/PWM5/SCLK_2/SCL_2/CCP2_2
LED_STAT
32 P2.4/A12/PWM4/MISO_2/SDA_2/CCP1_2
31 P2.3/A11/PWM3/MOSI_2/CCP0_2
LTE_POWER_CONTROL
30 P2.2/A10/PWM2/SS_2/ECI_2
29 P2.1/A9/PWM1
28 P4.2/RD_3/TXD2_2
RELAY1
27 P2.0/A8/PWM0/RSTSV
26 P4.1/ALE/CMPO_2
25 P3.7/INT3/RD_2/TXD_2/CMP+
24 P3.6/INT2/WR_2/RXD_2/CMP-
23 P3.5/T1/T0CLKO/ECI_4/SS_4/PWMFLT
12 ADC_AVCC
13 P5.4/RST/MCLKO
14 VCC
15 P5.5
16 GND
17 P4.0/WR_3/RXD2_2
18 P3.0/RXD/CCP3_4/INT4
19 P3.1/TXD/CCP2_4
20 P3.2/INT0/CCP1_4/SCLK_4/SCL_4
21 P3.3/INT1/CCP0_4/MISO_4/SDA_4
22 P3.4/T0/T1CLKO/MOSI_4/CMPO
+3.3V
C1
1uF
R10
NULL
0R
R12
+3.3V
RRXD0
RTXD0

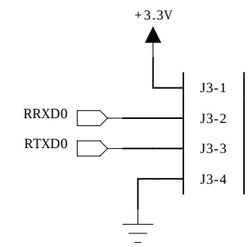
+3.3V
J3-1
RRXD0
J3-2
RTXD0
J3-3
J3-4

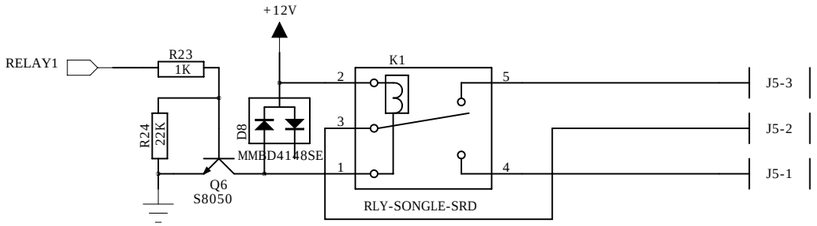
+12V
RELAY1
R23
1K
R24
22K
D8
MMBD4148SE
Q6
S8050
K1
2
3
1
5
4
J5-3
J5-2
J5-1
RLY-SONGLE-SRD

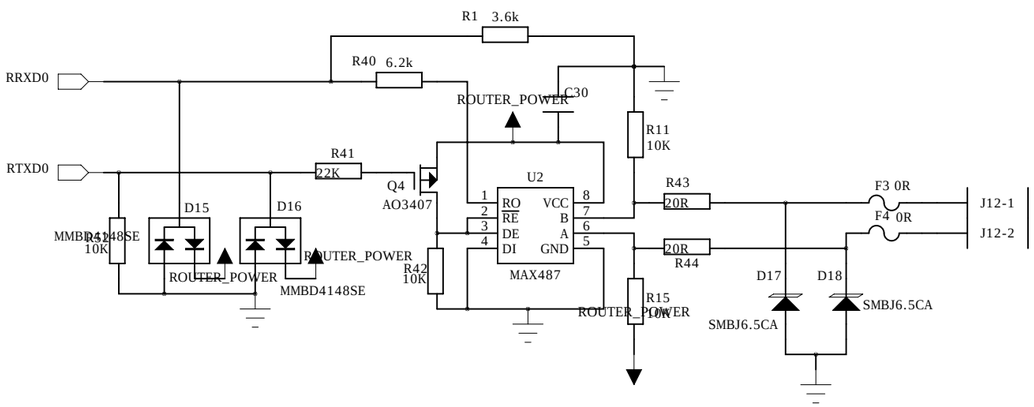
R1 3.6k
R40 6.2k
RRXD0
RTXD0
ROUTER_POWER
C30
R11
10K
R41
22K
Q4
AO3407
U2
RO
RE
DE
DI
VCC
B
A
GND
MAX487
R43
20R
R44
20R
F3 0R
F4 0R
J12-1
J12-2
D15
D16
MMBD4148SE
R12
10K
R42
10K
R15
10K
D17
D18
SMBJ6.5CA
SMBJ6.5CA

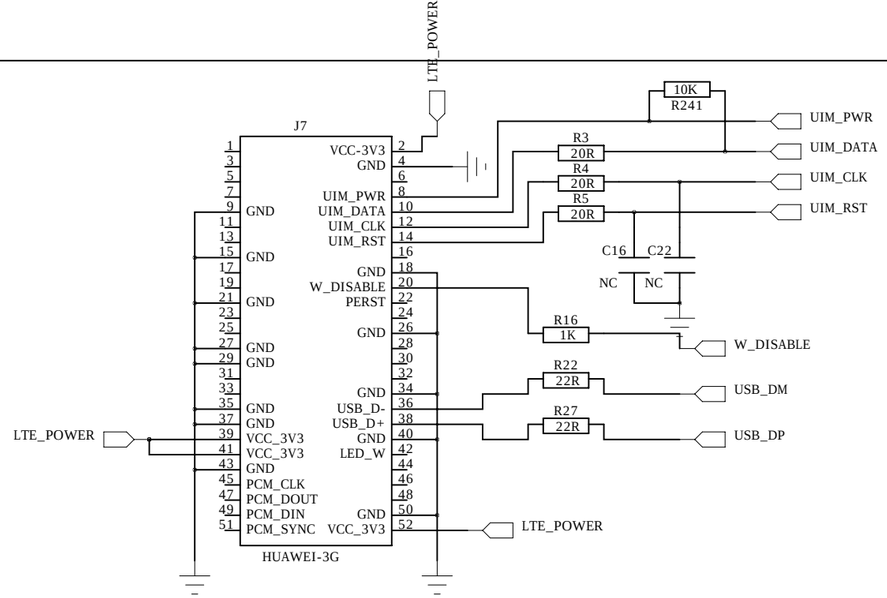
LTE_POWER
J7
VCC-3V3
GND
UIM_PWR
UIM_DATA
UIM_CLK
UIM_RST
GND
W_DISABLE
PERST
GND
USB_D-
USB_D+
LED_W
VCC_3V3
PCM_CLK
PCM_DOUT
PCM_DIN
PCM_SYNC
HUAWEI-3G
10K
R241
R3
20R
R4
20R
R5
20R
C16
C22
NC
NC
R16
1K
R22
22R
R27
22R
W_DISABLE
USB_DM
USB_DP
LTE_POWER

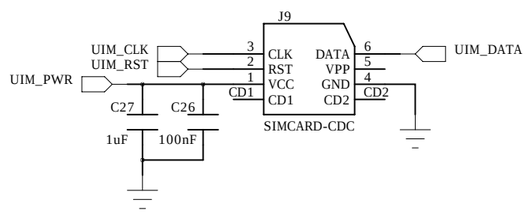
J9
UIM_CLK
UIM_RST
UIM_PWR
CLK
RST
VCC
CD1
DATA
VPP
GND
CD2
UIM_DATA
CD1
CD2
C27
C26
1uF
100nF
SIMCARD-CDC

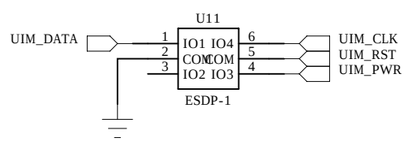
U11
UIM_DATA
IO1 IO4
COM COM
IO2 IO3
UIM_CLK
UIM_RST
UIM_PWR
ESDP-1

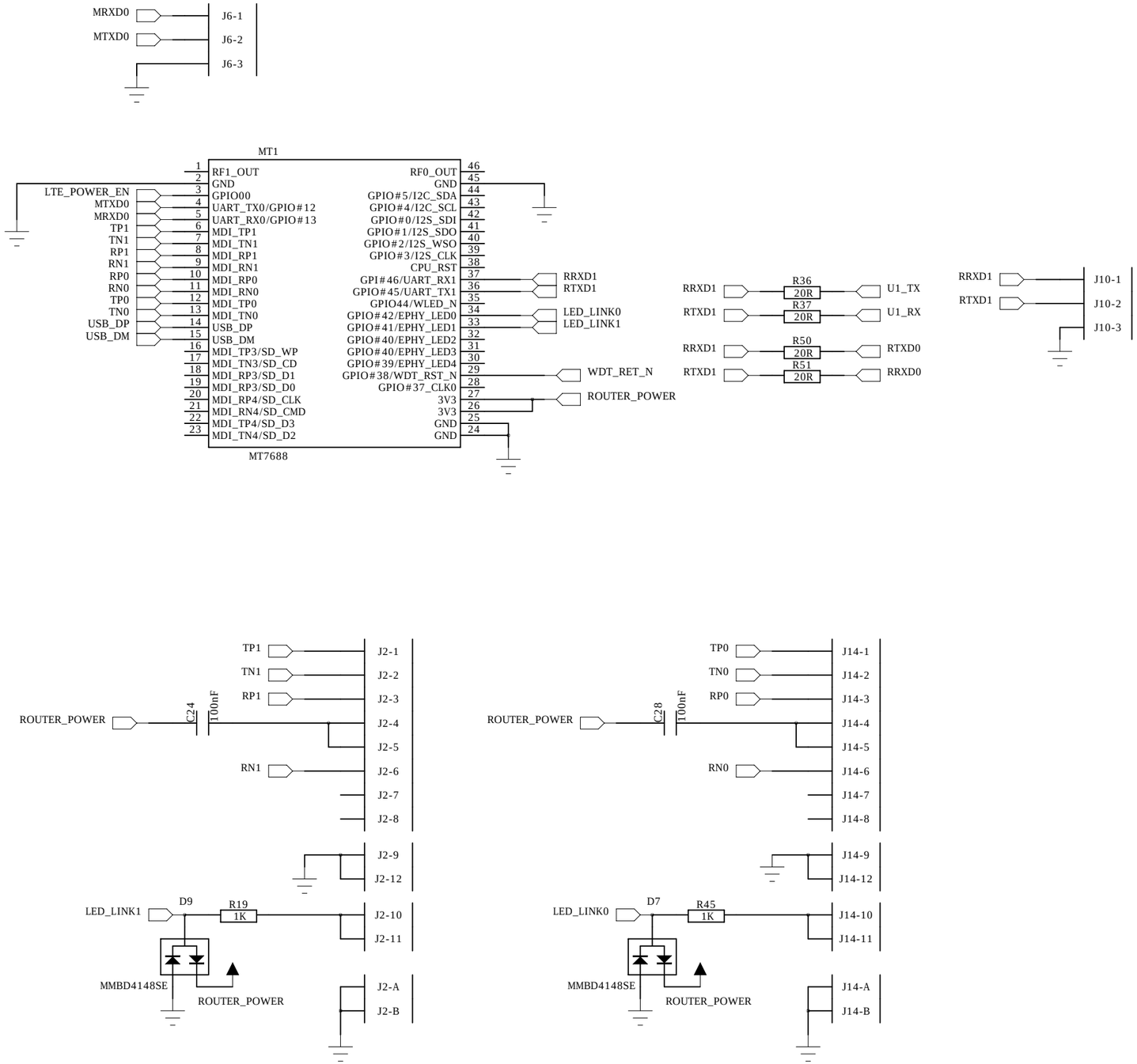
MRXD0
MTXD0
J6-1
J6-2
J6-3
MT1
MT7688
LTE_POWER_EN
MTXD0
MRXD0
TP1
TN1
RP1
RN1
RP0
RN0
TP0
TN0
USB_DP
USB_DM
RF1_OUT
GND
GPIO00
UART_TX0/GPIO#12
UART_RX0/GPIO#13
MDI_TP1
MDI_TN1
MDI_RP1
MDI_RN1
MDI_RP0
MDI_RN0
MDI_TP0
MDI_TN0
USB_DP
USB_DM
MDI_TP3/SD_WP
MDI_TN3/SD_CD
MDI_RP3/SD_D1
MDI_RP3/SD_D0
MDI_RP4/SD_CLK
MDI_RN4/SD_CMD
MDI_TP4/SD_D3
MDI_TN4/SD_D2
RF0_OUT
GND
GPIO#5/I2C_SDA
GPIO#4/I2C_SCL
GPIO#0/I2S_SDI
GPIO#1/I2S_SDO
GPIO#2/I2S_WSO
GPIO#3/I2S_CLK
CPU_RST
GPI#46/UART_RX1
GPIO#45/UART_TX1
GPIO44/WLED_N
GPIO#42/EPHY_LED0
GPIO#41/EPHY_LED1
GPIO#40/EPHY_LED2
GPIO#40/EPHY_LED3
GPIO#39/EPHY_LED4
GPIO#38/WDT_RST_N
GPIO#37_CLK0
3V3
3V3
GND
GND
RRXD1
RTXD1
LED_LINK0
LED_LINK1
WDT_RET_N
ROUTER_POWER
R36
20R
R37
20R
R50
20R
R51
20R
U1_TX
U1_RX
RTXD0
RRXD0
J10-1
J10-2
J10-3
TP1
TN1
RP1
RN1
ROUTER_POWER
C24
100nF
J2-1
J2-2
J2-3
J2-4
J2-5
J2-6
J2-7
J2-8
J2-9
J2-12
LED_LINK1
D9
R19
1K
J2-10
J2-11
MMBD4148SE
ROUTER_POWER
J2-A
J2-B
TP0
TN0
RP0
RN0
ROUTER_POWER
C28
100nF
J14-1
J14-2
J14-3
J14-4
J14-5
J14-6
J14-7
J14-8
J14-9
J14-12
LED_LINK0
D7
R45
1K
J14-10
J14-11
MMBD4148SE
ROUTER_POWER
J14-A
J14-B