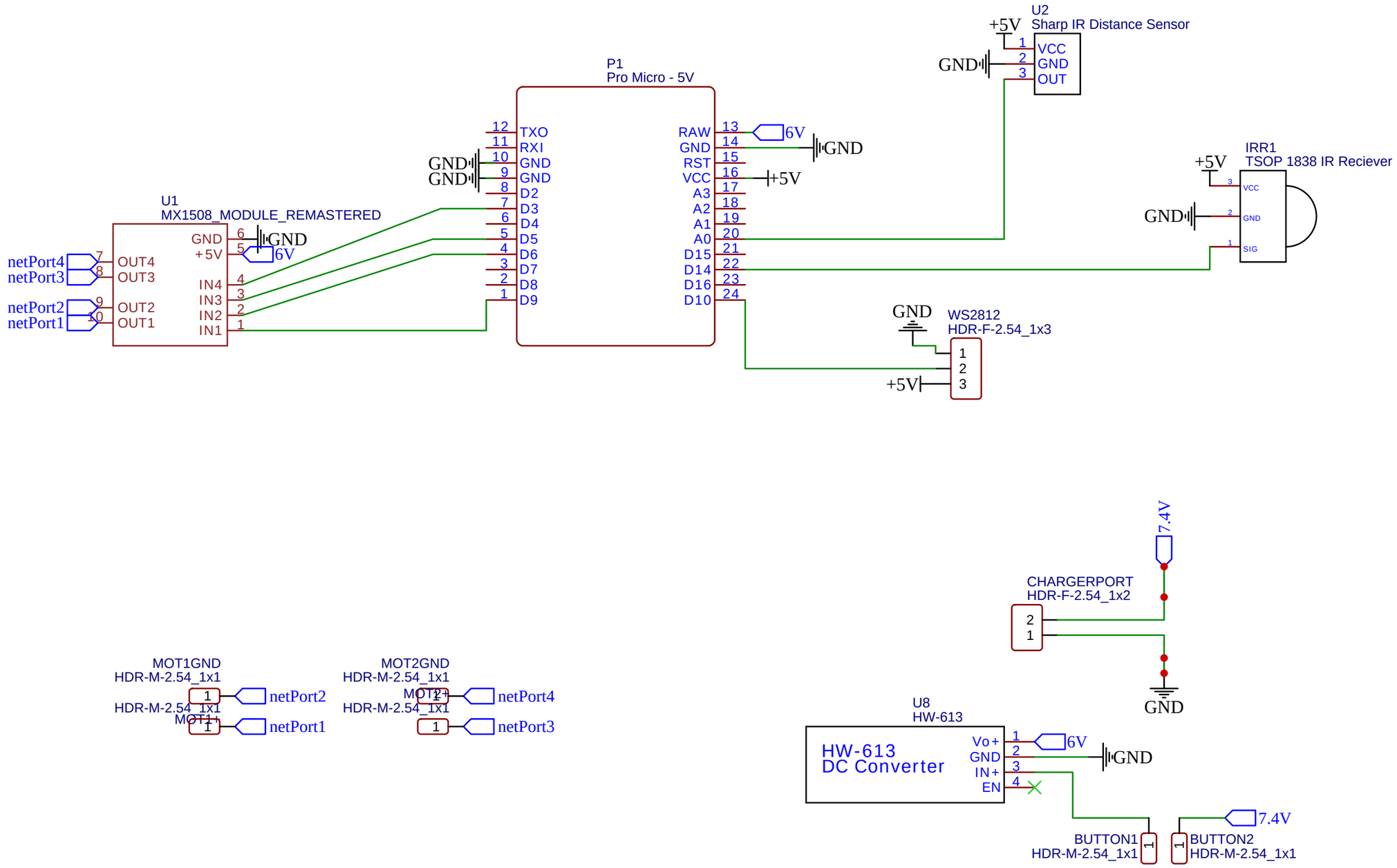

TITLE: Sumo bot 10x10 500g PCB 4 motor		REV: 1.0
EasyEDA	Company: Your Company	Sheet: 1/1
	Date: 2024-04-20 Drawn By: Qazaqstem	