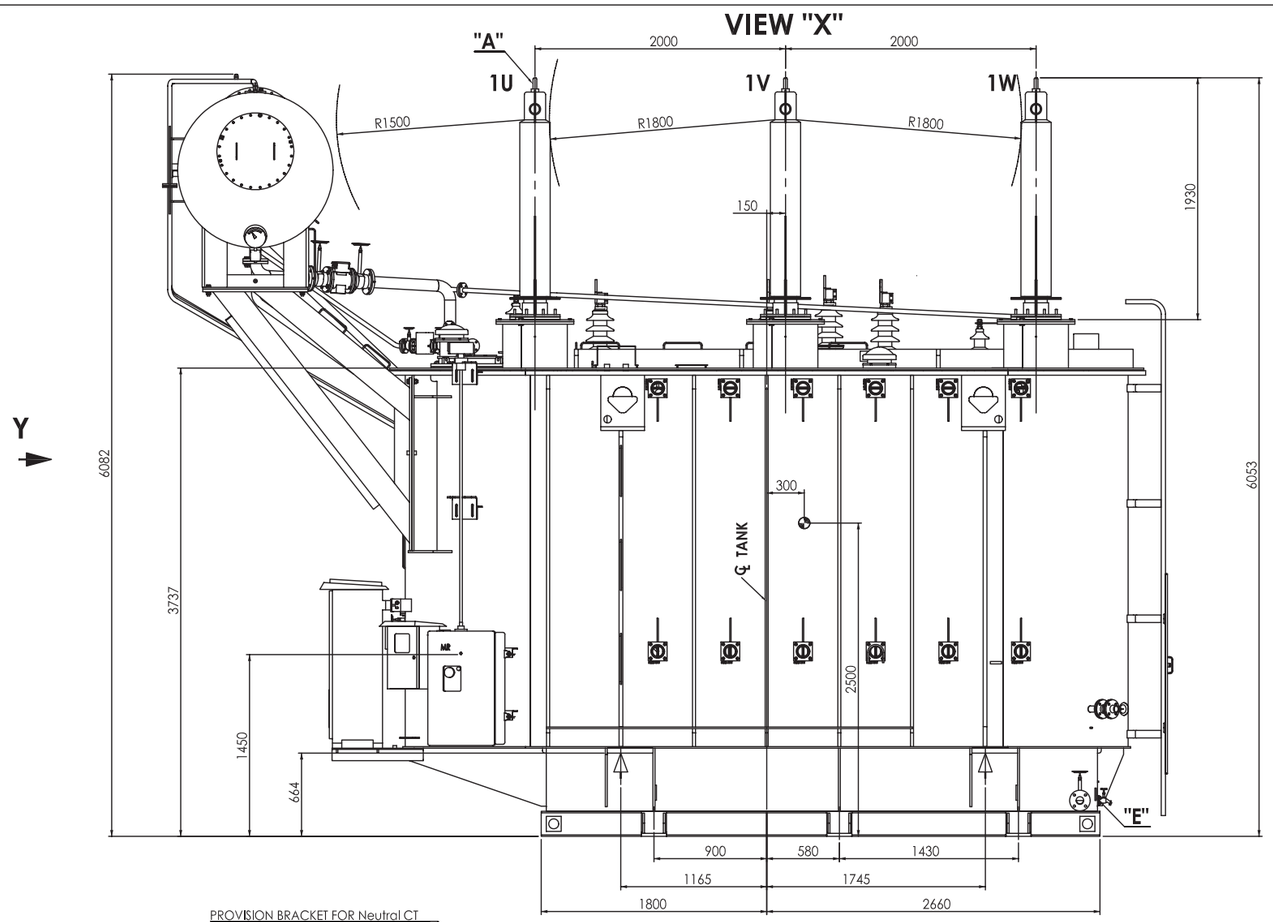

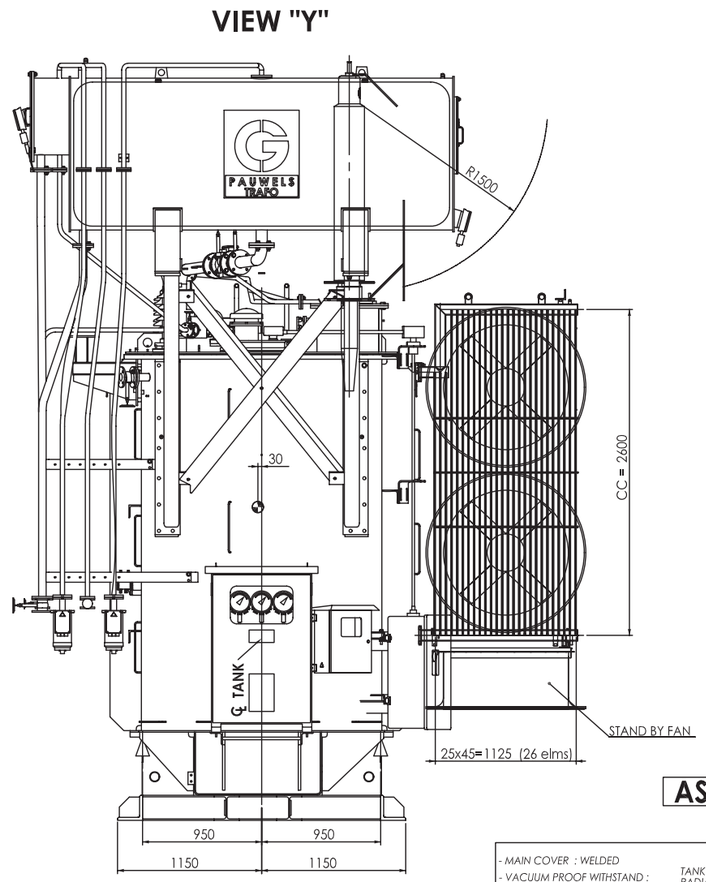

AS BUILT DRAWING

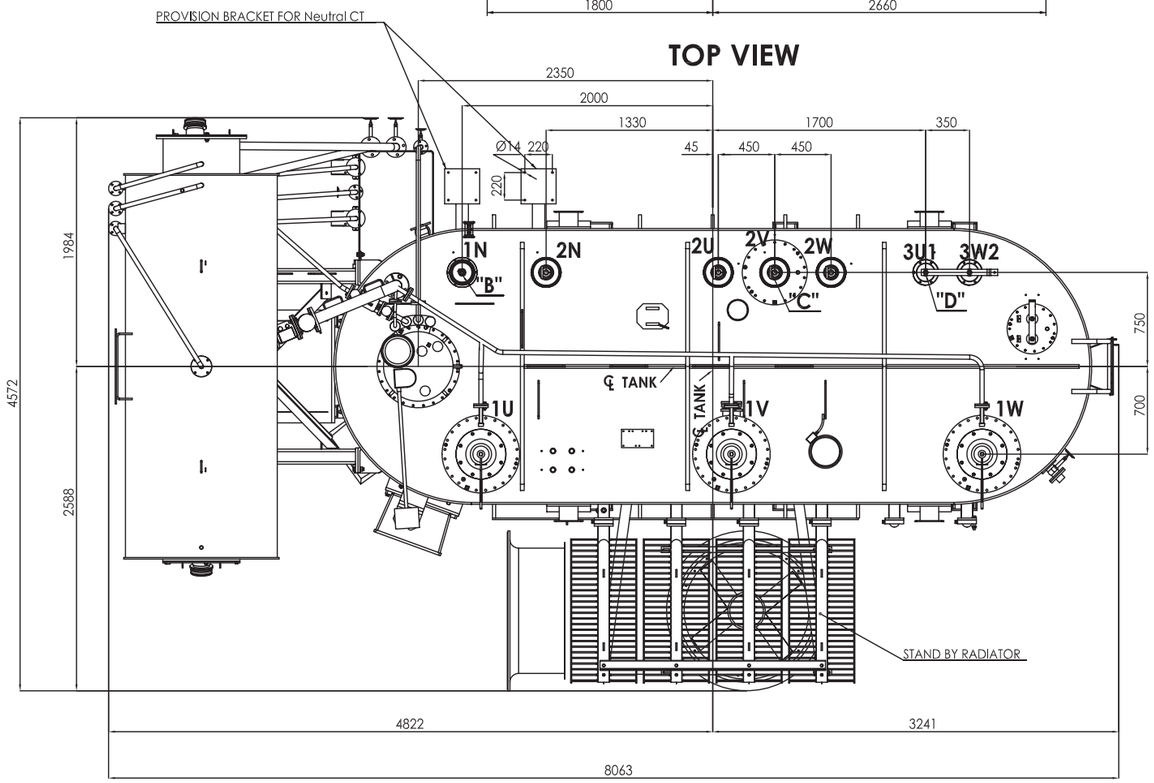

GENERAL ARRANGEMENT LEGEND, PLEASE REFER TO DWG.298/E0615-3

- MAIN COVER : WELDED
- VACUUM PROOF WITHSTAND : TANK : 100 %, RADIATOR : 100 %, CONSERVATOR : 100 %
- FINISHING PAINT COLOUR OF TRANSFORMER : RAL 7033
- CENTER OF GRAVITY OF TRANSFORMER : ✚
- ALL DIMENSIONS IN : mm
- EXTERNAL BOLTS AND NUTS : AISI 304 and AISI 316
- GASKET : VITON
- PARTS MARKED " O " ARE REMOVED DURING TRANSPORT

WEIGHT

- OIL (NYNAS LIBRA)	: 20700 Kg (24100 ltr)
- UNTANKING PART	: 75600 Kg
- TANK AND FITTING	: 19900 Kg
- TOTAL	: 116200 Kg

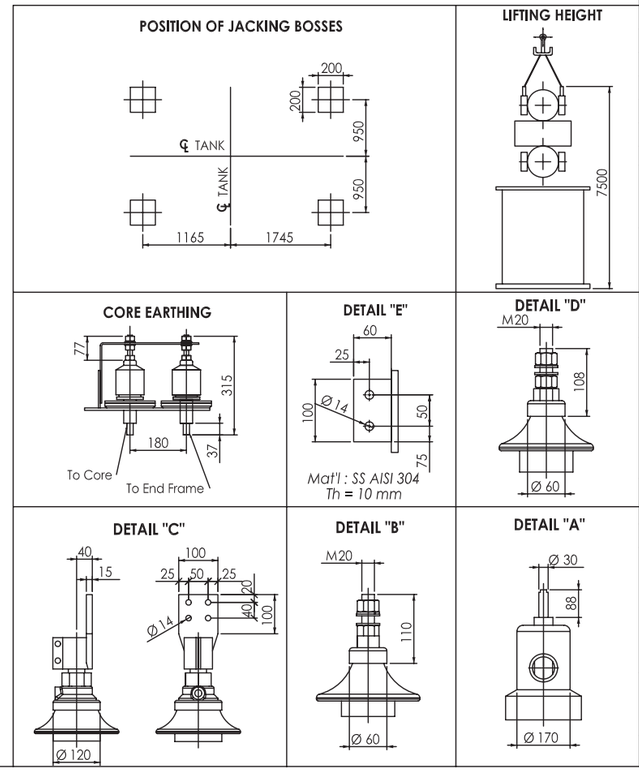

REV	ESTABLISHED DATE	CHECKED DATE	APPROVED DATE	MODIFICATIONS	STATUS
3	CHY 22.03.2011	YDMN 23.03.2011	HSM 23.03.2011	As Built	-
2	CHY 01.02.2011	YDMN 02.02.2011	HSM 02.02.2011	As Per PLN Comment dated 28.01.2011	NEN
1	CHY 14.12.2010	YDMN 15.12.2010	HSM 15.12.2010	As Per DRM dated 8-10.12.2010	EN
0	CHY 04.10.2010	YDMN 05.10.2010	HSM 05.10.2010	Original Issue	-

CLIENT :

PT. PLN (PERSERO)
PENYALURAN DAN PUSAT PENGATUR BEBAN JAWA BALI

SUPPLIER :

PT. CG POWER SYSTEMS INDONESIA
Kawasan Industri Menara Permai Kav. 10
Jl. Raya Narogong 23.8, Cileungsi - Bogor

PENGADAAN TRAFO TENAGA 150/20 KV DAN 70/20 KV DI LINGKUNGAN PT.PLN (PERSERO) (PAKET 1)

CONTRACT No : 192.PJ/611/P3B/2010 — DATE : 20 OKTOBER 2010

Issued	Checked	Std Checked	Released
Originating Form	Superseded Drawing	Superseded By	Without Sap Item list

TITLE OF DRAWING

GENERAL ARRANGEMENT DRAWING 150/20 kV - 36/60 MVA POWER TRANSFORMER

SCALE	Sap Item List Of Same No	
1:25	Sap Item List Of Different No	
	Serial Number	Destination
	3011100079	GI JABABEKA

Size	Langguage	Sheet No.	No. of sheet
A1	E	1	3

PERCIE'S DRAWING No.

PT. CGPSI DRAWING No. **298/E0615-1**

PLN'S DRAWING No.

REVISION 3

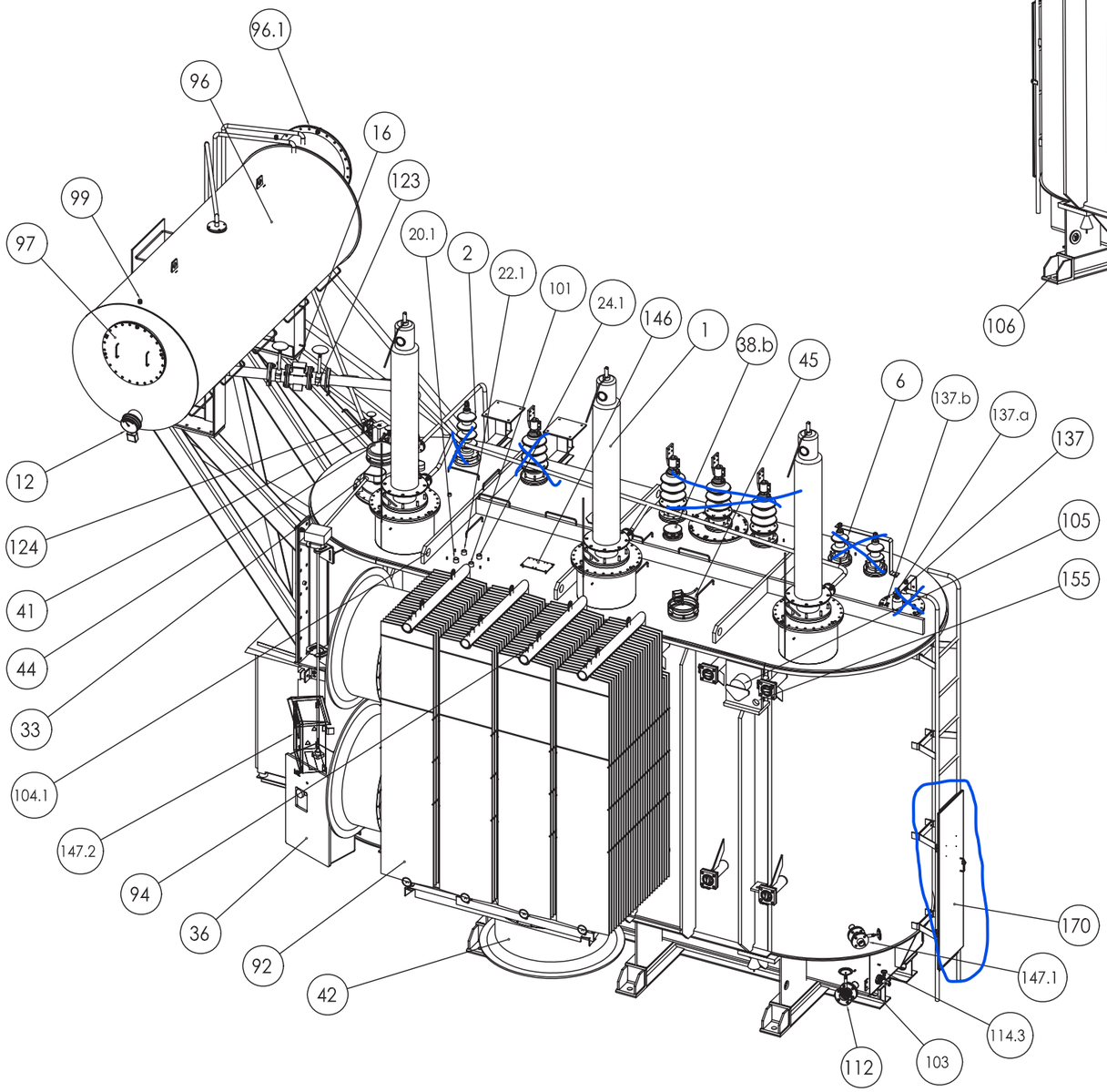

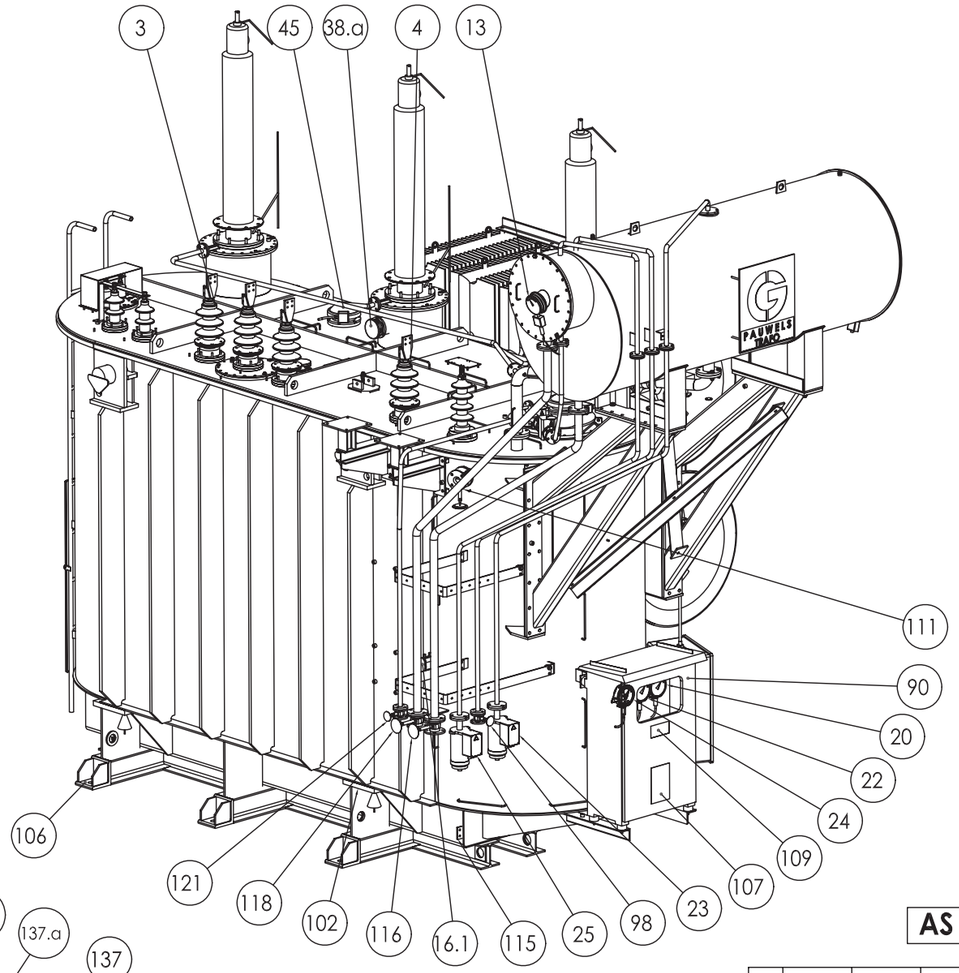

AS BUILT DRAWING

REV	DATE	CHECKED	APPROVED	MODIFICATIONS	STATUS
3	CHY 22.03.2011	YDMN 23.03.2011	HSM 23.03.2011	As Built	-
2	CHY 01.02.2011	YDMN 02.02.2011	HSM 02.02.2011	As Per PLN Comment dated 28.01.2011	NEN
1	CHY 14.12.2010	YDMN 15.12.2010	HSM 15.12.2010	As Per DRM dated 8-10.12.2010	EN
0	CHY 04.10.2010	YDMN 05.10.2010	HSM 05.10.2010	Original Issue	-

CLIENT :

PT. PLN (PERSERO)
PENYALURAN DAN PUSAT PENGATUR BEBAN JAWA BALI

SUPPLIER :

PT. CG POWER SYSTEMS INDONESIA
Kawasan Industri Menara Permai Kav. 10
Jl. Raya Narogong 23.8, Cileungsi - Bogor

PENGADAAN TRAFO TENAGA 150/20 KV DAN 70/20 KV DI LINGKUNGAN PT.PLN (PERSERO) (PAKET 1)

CONTRACT No : 192.PJ/611/P3B/2010

DATE : 20 OKTOBER 2010

Issued	Checked	Std Checked	Released
Originating Form	Superseded Drawing	Superseded By	Without Sop Item list

TITLE OF DRAWING

GENERAL ARRANGEMENT DRAWING-LEGEND 1 150/20 kV - 36/60 MVA POWER TRANSFORMER

SCALE 1:25

Sop Item List Of Same No

Sop Item List Of Different No

Serial Number	Destination
3011100079	GI JABABEKA

Size	Longguage	Sheet No.	No. of sheet
A1	E	2	3

PERCIE'S DRAWING No.

PT. CGPSI DRAWING No. **298/E0615-2**

PLN'S DRAWING No.

REVISION 3

GENERAL ARRANGEMENT VIEW, DETAIL & SECTION, PLEASE REFER TO DWG.298/E0615-1

Item No.	Description	O	Manufacture or Standard	Type	Qty
1	HV PHASE BUSHINGS	O	TRENCH	COT 750-800	3
2	HV NETRAL PHASE BUSHING	O	ZEP	DT 30NF630	1
3	LV PHASE BUSHINGS	O	ZEP	DT 30NF2000	3
4	LV NEUTRAL BUSHING	O	ZEP	DT 30NF2000	1
6	TERTIARY BUSHINGS	O	ZEP	DT 10NF630	2
12	MAGNETIC OIL LEVEL INDICATOR - MAIN TANK	-	MESSKO	MTO-STF160G	1
13	MAGNETIC OIL LEVEL INDICATOR - O.L.T.C.	-	MESSKO	MTO-STF160	1
16	BUCHHOLZ RELAY MAIN TANK	O	EMB	BF80/10	1
16.1	GAS SAMPLING DEVICE - BUCHHOLZ MAIN TANK	O	CEDASPE	RG3	1
20	TOP OIL TEMPERATUR INDICATOR (O.T.I.)	-	MESSKO	MTST	1
20.1	THERMOMETER POCKET FOR OTI	-	DIN 42554	Ø 1"	1
22	WINDING TEMPERATURE INDICATOR (WTI)-HV SIDE	-	MESSKO	MTSTW	1
22.1	THERMOMETER POCKET FOR WTI - HV SIDE	-	DIN 42554	Ø 1"	1
23	DEHYDRATING BREATHER FOR CONSERVATOR MAIN TANK	O	MESSKO	MTraB DB 100-T	1
24	WINDING TEMP. INDICATOR (W.T.I.) - LV SIDE	-	MESSKO	MTSTW	1
24.1	THERMOMETER POCKET FOR WTI - LV SIDE	-	DIN 42554	Ø 1"	1
25	DEHYDRATING BREATHER FOR CONSERVATOR	O	MESSKO	MTraB DB 100	1
33	ON LOAD TAP CHANGER	-	MR REINHAUSEN	VVIII 400Y-76-10193W	1
36	MOTOR DRIVE UNIT FOR O.L.T.C.	-	MR REINHAUSEN	ED100S	1
38.a	CURRENT TRANSFORMER TERMINAL BOX - W.T.I. HV	-	ESITAS	350/2A ; CL 3 ; 20VA	1
38.b	CURRENT TRANSFORMER TERMINAL BOX - W.T.I. LV	-	ESITAS	2400/2A ; CL 3 ; 20 VA	1
41	O.L.T.C. PROTECTIVE RELAY	-	MR	RS2001	1
42	COOLING FANS (AIR FLOW = 5.18 m3/s)	O	ZIEHL-ABEGG	FE100	3
44	OVER PRESSURE RELIEF DEVICE - OLTC	-	MESSKO	LMPRD	1
45	OVER PRESSURE RELIEF DEVICE - MAIN TANK	-	MESSKO	LMPRD	1
90	CONTROL CABINET	-	NOBI	1200x800x400	1
92	RADIATOR DISCONNECTABLE	O	SINJUNGWOO	CC2600/2100 x 26elm	4
93	THROTTLE VALVE FOR RADIATOR	-	DIN 42560	Butterfly Valve Ø80 (3")	12
94	AIR VENT FOR RADIATOR	-	-	-	4
95	DRAIN PLUG FOR RADIATOR	-	-	-	4
96	CONSERVATOR FOR MAIN TANK - WITH ATMOSEAL (AIR BAG)	O	MUSTHANE	MBT 1200-3050	1
96.1	CONSERVATOR FOR L.T.C.	O	-	-	1
97	MANHOLE CONSERVATOR	-	-	-	2
98	VACUUM PULLING VALVE FOR VACUUM PROCESS	-	DIN 42568	Ø 25 (1") PN10	1
99	AIR-VENT	-	DIN 42558	TYPE 12A	2
101	THERMOMETER POCKET - SPARE		DIN 42554	Ø 1"	1
102	JACKING BOSSES	-	-	-	4
103	TOWING LUGS	-	-	-	8
104.1	LIFTING LUGS FOR COVER	-	-	-	4
105	LIFTING LUGS FOR COMPLETE TRANSFORMER	-	-	-	4
106	BOTTOM SKIDBASE	-	-	-	1
107	RATING AND DIAGRAM PLATE	-	-	-	1
109	OIL PIPING AND VALVE LOCATION PLATE	-	-	-	1
111	FILLING AND OIL FILTER VALVE TOP	-	DIN 86720	Ø 50 (2")	1
112	DRAIN AND BOTTOM OIL FILTER VALVE	-	DIN 42568	Ø 50 (2") PN10	1
114.3	BOTTOM OIL SAMPLING VALVE	-	DIN 42568	Ø 15 (1/2") PN10	1
115	GROUNDING PADS (PUTS DIAGONALLY OPPOSITE)	-	-	-	2
116	DRAIN VALVE CONSERVATOR MAIN TANK	O	DIN 42568	Ø 50 (2") PN10	1
118	DRAIN VALVE CONSERVATOR L.T.C.	O	DIN 42568	Ø 50 (2") PN10	1
121	DRAIN AND FILLING VALVE L.T.C.	O	DIN 42568	Ø 25 (1") PN10	1
123	SHUT-OFF VALVE BUCHHOLZ RELAY - CONSERVATOR MAIN TANK	-	DIN 42568	Ø 80 (3") PN10	2
124	SHUT-OFF VALVE L.T.C. CONSERVATOR	O	DIN 42568	Ø 25 (1") PN10	2
137	CORE & END FRAME EARTHING BUSHINGS	-	ZEP	DT 3NF630	2
137.a	CORE EARTHING PLATE	-	-	-	1
137.b	END FRAME EARTHING PLATE	-	-	-	1
146	IMPACT RECORDER	-	-	-	1
147.1	HYDRANT M2 SHUT-UP VALVE	-	-	-	1
147.2	BUSHING MONITORING	-	EDI	-	1
155	ANCHORED LUGS FOR TRANSPORT	-	-	-	4
170	LADDER WITH LOCKABLE DOOR	O	-	-	1

Note : PARTS MARKED "O" ARE REMOVED DURING TRANSPORT

GENERAL ARRANGEMENT VIEW, DETAIL & SECTION, PLEASE REFER TO DWG.298/E0615-1

AS BUILT DRAWING

REV	ESTABLISHED DATE	CHECKED DATE	APPROVED DATE	MODIFICATIONS	STATUS
3	CHY 22.03.2011	YDMN 23.03.2011	HSM 23.03.2011	As Built	-
2	CHY 01.02.2011	YDMN 02.02.2011	HSM 02.02.2011	As Per PLN Comment dated 28.01.2011	NEN
1	CHY 14.12.2010	YDMN 15.12.2010	HSM 15.12.2010	As Per DRM dated 8-10.12.2011	EN
0	CHY 04.10.2010	YDMN 05.10.2010	HSM 05.10.2010	Original Issue	-

CLIENT :

PT. PLN (PERSERO)
PENYALURAN DAN PUSAT PENGATUR BEBAN JAWA BALI

SUPPLIER :

PT. CG POWER SYSTEMS INDONESIA
Kawasan Industri Menara Permai Kav. 10
Jl. Raya Narogong 23.8, Cileungsi - Bogor

PENGADAAN TRAFO TENAGA 150/20 KV DAN 70/20 KV DI LINGKUNGAN PT.PLN (PERSERO) (PAKET 1)

CONTRACT No : 192.PJ/611/P3B/2010

DATE : 20 OKTOBER 2010

Issued	Checked	Std Checked	Released
Originating Form	Superseded Drawing	Superseded By	Without Sop Item list

TITLE OF DRAWING

GENERAL ARRANGEMENT DRAWING-LEGEND 2 150/20 kV - 36/60 MVA POWER TRANSFORMER

SCALE: NTS

Sop Item List Of Same No

Sop Item List Of Different No

Serial Number	Destination
3011100079	GI JABABEKA

Size	Langguage	Sheet No.	No. of sheet
A3	E	3	3

PAUWELS TRAFO

PERCIE'S DRAWING No.

PT. CGPSI DRAWING No. **298/E0615-3**

PLN'S DRAWING No.

REVISION 3

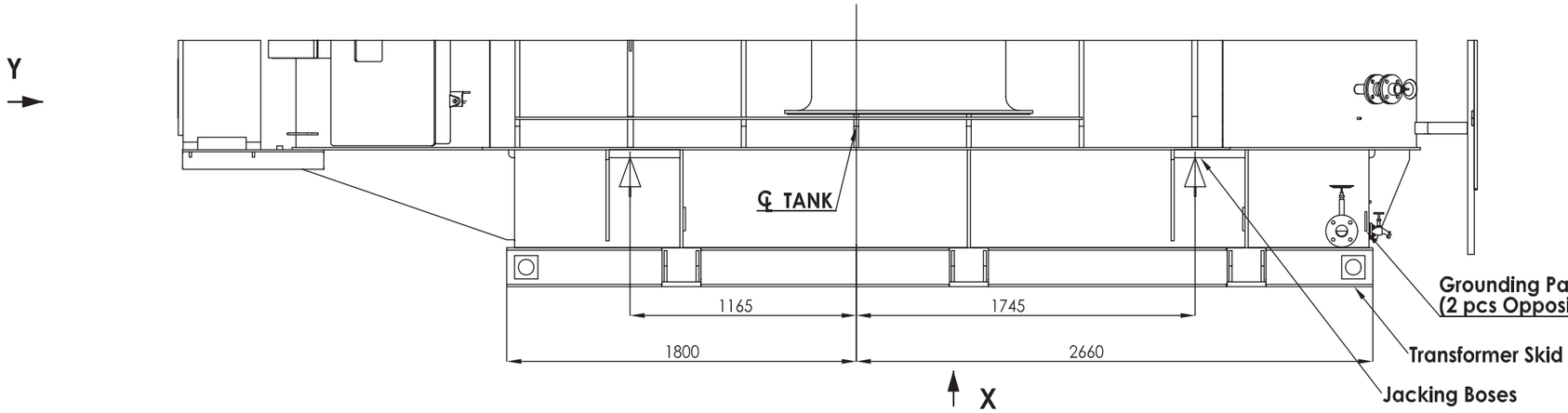

VIEW "Y"

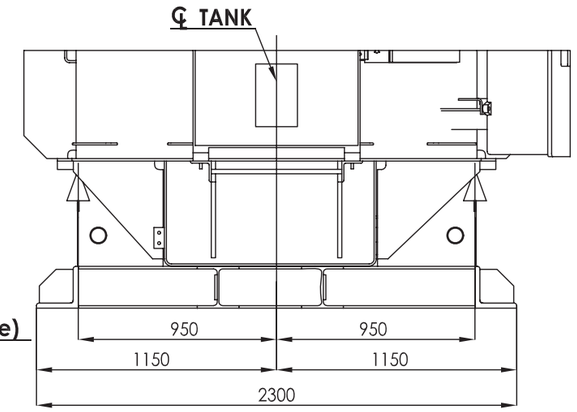

VIEW "X"

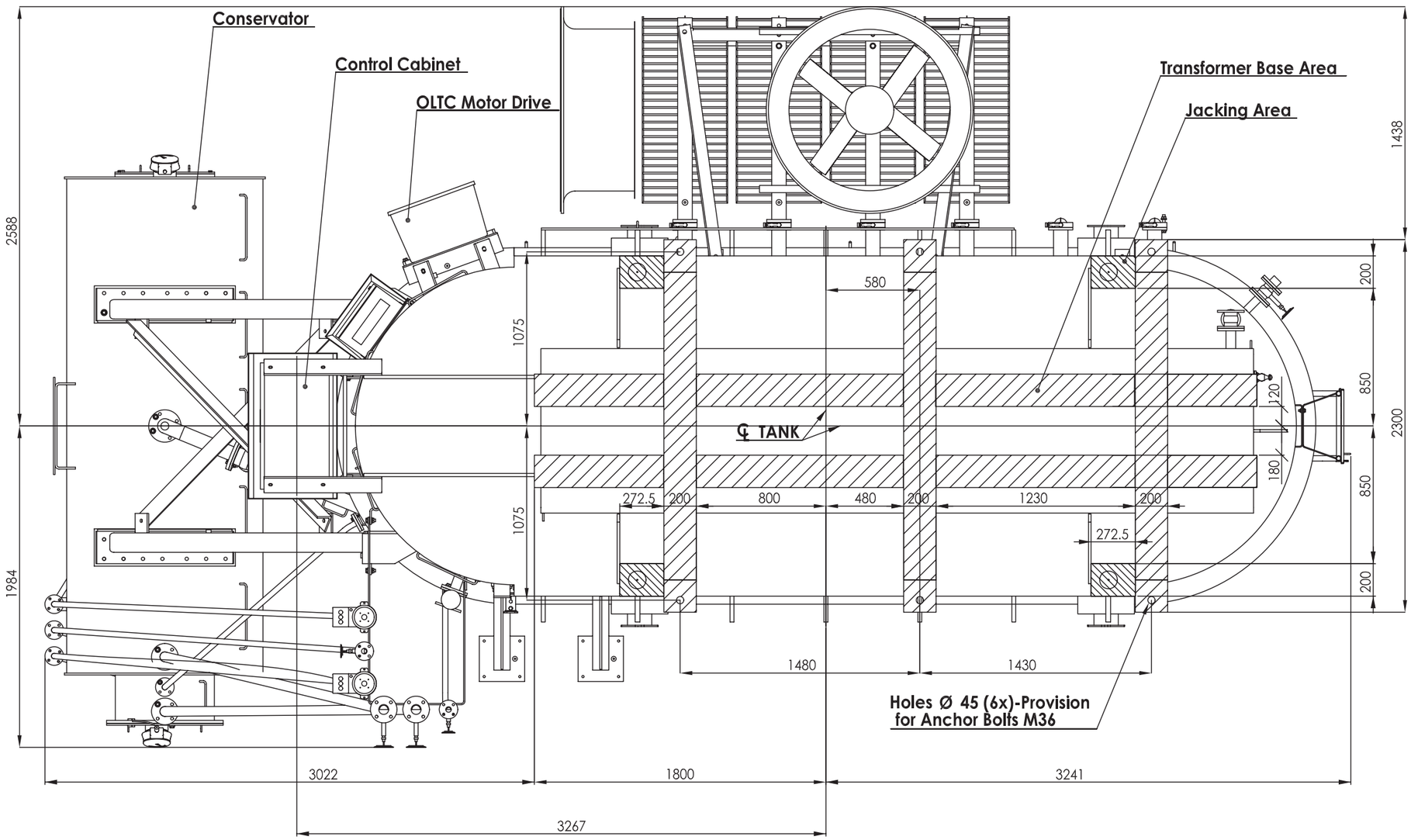

AS BUILT DRAWING

TOTAL WEIGHT (LOAD OF FOUNDATION) : 116200 Kg

ALL DIMENSIONS IN : mm

REV	ESTABLISHED DATE	CHECKED DATE	APPROVED DATE	MODIFICATIONS	STATUS
3	CHY 22.03.2011	YDMN 23.03.2011	HSM 23.03.2011	As Built	-
2	CHY 01.02.2011	YDMN 02.02.2011	HSM 02.02.2011	As Per PLN Comment dated 28.01.2011	NEN
1	CHY 14.12.2010	YDMN 15.12.2010	HSM 15.12.2010	As Per DRM dated 8-10.12.2010	EN
0	CHY 04.10.2010	YDMN 05.10.2010	HSM 05.10.2010	Original Issue	-

CLIENT :

PT. PLN (PERSERO)
PENYALURAN DAN PUSAT PENGATUR BEBAN JAWA BALI

SUPPLIER :

PT. CG POWER SYSTEMS INDONESIA
Kawasan Industri Menara Permai Kav. 10
Jl. Raya Narogong 23.8, Cileungsi - Bogor

PENGADAAN TRAFO TENAGA 150/20 KV

DAN 70/20 KV DI LINGKUNGAN PT.PLN (PERSERO)

(PAKET 1)

CONTRACT No : 192.PJ/611/P3B/2010

DATE : 20 OKTOBER 2010

Issued | Checked | Std Checked | Released

Originating Form | Superseded Drawing | Superseded By | Without Sop Item list

TITLE OF DRAWING

FOUNDATION DRAWING
150/20 kV - 36/60 MVA
POWER TRANSFORMER

SCALE 1:15

Sop Item List Of Same No

Sop Item List Of Different No

Serial Number	Destination
3011100079	GI JABABEKA

Size	Langguage	Sheet No.	No. of sheet
A1	E	1	1

PERCIE'S DRAWING No.

PT. CGPSI DRAWING No. **002/E0615**

PLN'S DRAWING No.

REVISION 3

SHIPPER

Kawasan Industri Menara Permai Kav. 10
Jl. Raya narogong Km 23,852
Cileungsi, Bogor 16820 - Indonesia
Ph. 62 (21) 8230430 (Hunting)

PACKING LIST

Document Number

TD/PL E0615

PROJECT NAME GI Jababeka
CONTRACT NO. 192.PJ/611/P3B/2010
WORK NO. E0615
SERIAL NO. 3011100079
GA DRAWING NO. 298/E0615
CAPACITY 60 MVA
VOLTAGE 150/20 kV

CONSIGNEE/ CUSTOMER
PT. PLN (PERSERO)
JABABEKA

NOTIFY PARTY
-

SHIPPING MODE
☐ AIR ☑ SEA
☑ ROAD ☐ EXPRESS COURIER

PACK. No.	BRIEF DESCRIPTION	DIMENSION (m)			WEIGHT (kg)		VOL	PACK TYPE
		L	W	H	NET	GROSS	(m³)	
PL E0615-1	Dismantled Transformer	7.00	2.90	4.28	88,000	88,000	86.88	-
PL E0615-2	Conservator	4.50	2.50	2.30	1,600	2,256	25.88	Case
PL E0615-3	Radiator (2 pce) + Fans (2 pcs)	3.00	1.50	2.00	1,650	1,974	9.00	Crate
PL E0615-4	Radiator (2 pce)	3.00	1.50	2.00	1,470	1,794	9.00	Crate
PL E0615-5	Fans (1 pcs)	1.50	1.50	0.70	90	133	1.58	Case
PL E0615-6	HV Bushings	2.80	1.14	0.68	405	585	2.17	Case
PL E0615-7	LV+ LVN Bushings	1.40	1.20	0.60	140	218	1.01	Case
PL E0615-8	HVN+Tertiary Bushings	1.40	1.00	0.60	35	103	0.84	Case
PL E0615-9	Accessories	2.30	1.50	1.40	810	1,020	4.83	Crate
TOTAL	9 Packages				94,200	96,084	141.18	

TRANSPORT WITHOUT OIL - UNDER CUSHION OF NITROGEN

TRANSFORMER OIL = NYNAS LYBRA
Seperate boxes to cover control cubicle, OLTC MD. OPRDs, N2 bottles, Tertiary and Core earthing bushings

Revision	0	1	2		VALIDATION	PAGE
Date	12-Oct-10	20-Dec-10	16-Dec-11			
Drawn	CHY	CHY	SND			
Checked	YDMN	YDMN				1/10
Approved	HSM	HSM				

SHIPPER

Kawasan Industri Menara Permai Kav. 10
Jl. Raya narogong Km 23,852
Cileungsi, Bogor 16820 - Indonesia
Ph. 62 (21) 8230430 (Hunting)

PACKING LIST

Document Number

TD/PL E0615

PROJECT NAME	GI Jababeka
CONTRACT NO.	192.PJ/611/P3B/2010
WORK NO.	E0615
SERIAL NO.	3011100079
GA DRAWING NO.	298/E0615
CAPACITY	60 MVA
VOLTAGE	150/20 kV

CONSIGNEE/ CUSTOMER
PT. PLN (PERSERO)

DIMENSION (m)			WEIGHT (kg)		Volume (m³)	PACK TYPE
L	W	H	Net	Gross		
7.00	2.90	4.28	88,000	88,000	86.88	-

PL E0615-1

No.	DESCRIPTION	GA Ref.	Quantity		REMARKS
1	**DISMANTLED TRANSFORMER**	-	1.0	SET	Filled Oil 1500 ltr
a	Top Oil Temperature Indicator (O.T.I.)	20	1.0		MESSKO MTST (Compact / Trasy)
b	Thermometer Pocket For O.T.I.	20.1	1.0		DIN 42554 Ø 1"
c	Winding Temperature Indicator - HV Side (W.T.I. HV)	22	1.0		MESSKO MTST (Compact / Trasy)
d	Thermometer Pocket For W.T.I. - HV Side	22.1	1.0		DIN 42554 Ø 1"
e	Winding Temperature Indicator - LV Side (W.T.I. LV)	24	1.0		MESSKO MTST (Compact / Trasy)
f	Thermometer Pocket For W.T.I. - LV Side	24.1	1.0		DIN 42554 Ø 1"
g	On Load Tap Changer (O.L.T.C.)	33	1.0		MR W III-400Y-76kV
h	Motor Drive Unit For O.L.T.C.	36	1.0		MR ED100S
i	Drive Shafts & Bevel gear - MD Unit O.L.T.C.	-	1.0		
j	Over Pressure Relief Device (OPRD) - O.L.T.C	44	1.0		LMPRD 20 psi Messko
k	Over Pressure Relief Device (OPRD) - Main Tank	45	1.0		LMPRD 8 psi Messko
l	Control Cubicle	90	1.0		
m	Throttle Valve For Radiator + stud bolts M16	93	12 + 48		MAIER Dia. 80
n	Thermometer Pocket - Spare	101	1.0		DIN 42554 Ø 1"
o	Rating And Diagram Plate	107	1.0		
p	Oil Piping And Valve Location Plate	109	1.0		
q	Oil Filter Valve Top	111	1.0		GG VALVE Ø 50 (2")
r	Drain-And Oil Filter Valve Bottom	112	1.0		GG VALVE Ø 50 (2")
s	Bottom-Oil Sampling Valve	114.3	1.0		Sampling Valve NW 15 DIN 42568
t	Core & End Frame Earthing Bushings - with Cu Bar earthing connection	137	2.0		ZEP FHD3N630
u	Core Earthing Plate	137.a	1.0		
v	End Frame Earthing Plate	137.b	1.0		
w	Shocklog 248	145	1.0		
x	Gas Dry Nitrogen+ Bottle 6 m3	-	2.0		
y	Gas Nitrogen Pressure Instalation	-	1.0		
z	Hydrant M2 Shut - Up Valve	147.1	1.0		
ab	Adaptor for Hydrant M2	-	1.0	set	
ac	Bushing Monitorinng Box (EDI / EBERLE)	147.2	1.0	set	
ad	Pipe connection (venting) Bushing's Turrets - buchholz relay		1.0	PCS	Pipe 1"
ae	Air Vent at Cubicle Panel		3.0	PCS	
af	Gland Plate at Cubicle Panel		1.0	PCE	
ag	Letter Plate 137.b		1.0	PCE	
ah	Roof OTI / WTI		1.0	PCE	
ai	Roof Core Earthing Bushings		1.0	PCE	

Revision	0	1	2	Note	VALIDATION	PAGE
Date	12-Oct-10	20-Dec-10	16-Dec-11			2/10
Drawn	CHY	CHY	SND			
Checked	YDMN	YDMN				
Approved	HSM	HSM				

SHIPPER

Kawasan Industri Menara Permai Kav. 10
Jl. Raya narogong Km 23,852
Cileungsi, Bogor 16820 - Indonesia
Ph. 62 (21) 8230430 (Hunting)

PACKING LIST

Document Number

TD/PL E0615

PROJECT NAME	GI Jababeka
CONTRACT NO.	192.PJ/611/P3B/2010
WORK NO.	E0615
SERIAL NO.	3011100079
GA DRAWING NO.	298/E0615
CAPACITY	60 MVA
VOLTAGE	150/20 kV

CONSIGNEE/ CUSTOMER
PT. PLN (PERSERO)

DIMENSION (m)			WEIGHT (kg)		Volume (m³)	PACK TYPE
L	W	H	Net	Gross		
4.50	2.50	2.30	1,600	2,256	25.88	Case

PL E0615-2

No.	DESCRIPTION	GA Ref.	Quantity		REMARKS
1	**CONSERVATOR (FOR MAIN TANK)**	96	1.0	SET	Filled Oil 2000 ltr
a	Atmoseal (Air Bag - install inside conservator)	-	1.0		1500-900 (Inside Accessories Box)
b	Conservator For On Load Tap Changer (O.L.T.C.)	96.1	1.0		
c	Magnetic Oil Level Indicator - Conservator For Main Tank	12	1.0		MESSKO MTO
d	Magnetic Oil Level Indicator - Conservator OLTC	13	1.0		MESSKO MTO
e	Air Vent	99	2.0		DIN 42558 TYPE 12A
2	Buchholz Relay + Pipe Connection 3"	16	1.0	PCS	EMB BF80/10
3	Shut-Off Valve Buchholz Relay - Conservator Main Tank	123	2.0	PCS	GG VALVE Ø 80 (3")
4	Threesula Pipe	-	1.0	PCS	-
5	Pipe Connection 1" - Dehydrating Breather For Conservator Main Tank	23	1.0	PCS	
6	Pipe Connection 1" - Dehydrating Breather For Conservator L.T.C.	25	1.0	PCS	
7	Shut-Off Valve - L.T.C. Protective Relay + Pipe Connection 1"	124	1.0	PCS	GG VALVE Ø 25 (1")
8	Drain Valve Conservator Main Tank + Pipe Connection 2"	116	1.0	PCS	GG VALVE Ø 50 (2")
9	Drain Valve Conservator L.T.C.+ Pipe connection 2"	118	1.0	PCS	GG VALVE Ø 50 (2")
10	Vacuum Pulling Flange (Vacuum Process) + Pipe conn. 1"	98	1.0	PCS	Flange DN 25
11	Support Fans		2.0	PCS	
12	U Bolt Support Fans		4.0	PCS	
13	Ladder With Lockable Door	170	1.0	PCS	
14	LVN CT Support		1.0	PCS	
15	Logo " CG Pauwels" 700x525mm	-	1.0	PCS	
16	Cross Bracing - Conservator Leg	-	2.0	PCS	L80 x lg.1842
17	Conservator Support	-	2.0	PCS	
18	Pipe connection (venting) Bushing's Turrets - buchholz relay		1.0	PCS	Pipe 1" (On Cover Trafo)
19	Pipe Connection (By Pass) L.T.C. - buchholz relay		1.0	PCS	Pipe 1/2"
20	Radiator cross bracing (Bottom) (Inside Radiators Box)	-	2.0	PCS	L80xLg1425
21	Radiator cross bracing (Top + Bottom) (Inside Radiators Box)	-	2.0	PCS	L80xLg1800
22	Drain And Filling Valve Of L.T.C + Pipe Connection 1"	121	1.0	PCS	GG VALVE Ø 25 (1")
23	Pipe Connection support	-	2.0	PCS	
24	HVN CT Support		1.0	PCS	
25	Letter Plate 116		1.0	PCE	
26	Letter Plate 118		1.0	PCE	
27	Letter Plate 121		1.0	PCE	
28	Letter Plate 123		2.0	PCS	

Revision	0	1	2	Note	VALIDATION	PAGE
Date	12-Oct-10	20-Dec-10	16-Dec-11			3/10
Drawn	CHY	CHY	SND			
Checked	YDMN	YDMN				
Approved	HSM	HSM				

SHIPPER

Kawasan Industri Menara Permai Kav. 10
Jl. Raya narogong Km 23,852
Cileungsi, Bogor 16820 - Indonesia
Ph. 62 (21) 8230430 (Hunting)

PACKING LIST

Document Number

TD/PL E0615

PROJECT NAME	GI Jababeka
CONTRACT NO.	192.PJ/611/P3B/2010
WORK NO.	E0615
SERIAL NO.	3011100079
GA DRAWING NO.	298/E0615
CAPACITY	60 MVA
VOLTAGE	150/20 kV

CONSIGNEE/ CUSTOMER
PT. PLN (PERSERO)

DIMENSION (m)			WEIGHT (kg)		Volume (m³)	PACK TYPE
L	W	H	Net	Gross		
3.00	1.50	2.00	1,650	1,974	9.00	Crate

PL E0615-3

No.	DESCRIPTION	GA Ref.	Quantity		REMARKS
1	**RADIATOR - DISCONNECTABLE**	92	2.0	SET	CC : 2600/2100x26elm
a	AIR VENT FOR RADIATOR	94	2.0		
b	DRAIN PLUG FOR RADIATOR	95	2.0		
2	**Cooling Fans**	42	2.0	SET	FE 100 . NDL . 6N . V7 Ziehl
3	Radiator cross bracing (Bottom)	-	2.0	PCS	L80xLg1800

Revision	0	1	2	Note	VALIDATION	PAGE
Date	12-Oct-10	20-Dec-10	16-Dec-11			4/10
Drawn	CHY	CHY	SND			
Checked	YDMN	YDMN				
Approved	HSM	HSM				

SHIPPER

Kawasan Industri Menara Permai Kav. 10
Jl. Raya narogong Km 23,852
Cileungsi, Bogor 16820 - Indonesia
Ph. 62 (21) 8230430 (Hunting)

PACKING LIST

Document Number

TD/PL E0615

PROJECT NAME	GI Jababeka
CONTRACT NO.	192.PJ/611/P3B/2010
WORK NO.	E0615
SERIAL NO.	3011100079
GA DRAWING NO.	298/E0615
CAPACITY	60 MVA
VOLTAGE	150/20 kV

CONSIGNEE/ CUSTOMER
PT. PLN (PERSERO)

DIMENSION (m)			WEIGHT (kg)		Volume (m³)	PACK TYPE
L	W	H	Net	Gross		
3.00	1.50	2.00	1,470	1,794	9.00	Crate

PL E0615-4

No.	DESCRIPTION	GA Ref.	Quantity		REMARKS
1	**RADIATOR - DISCONNECTABLE**	92	2.0	SET	CC : 2600/2100x26elm
a	AIR VENT FOR RADIATOR	94	2.0		
b	DRAIN PLUG FOR RADIATOR	95	2.0		
2	Radiator cross bracing (Top + Bottom)	-	2.0	PCS	L80xLg1425

Revision	0	1	2	Note	VALIDATION	PAGE
Date	12-Oct-10	20-Dec-10	16-Dec-11			5/10
Drawn	CHY	CHY	SND			
Checked	YDMN	YDMN				
Approved	HSM	HSM				

SHIPPER

Kawasan Industri Menara Permai Kav. 10
Jl. Raya narogong Km 23,852
Cileungsi, Bogor 16820 - Indonesia
Ph. 62 (21) 8230430 (Hunting)

PACKING LIST

Document Number

TD/PL E0615

PROJECT NAME	GI Jababeka
CONTRACT NO.	192.PJ/611/P3B/2010
WORK NO.	E0615
SERIAL NO.	3011100079
GA DRAWING NO.	298/E0615
CAPACITY	60 MVA
VOLTAGE	150/20 kV

CONSIGNEE/ CUSTOMER
PT. PLN (PERSERO)

DIMENSION (m)			WEIGHT (kg)		Volume (m³)	PACK TYPE
L	W	H	Net	Gross		
1.50	1.50	0.70	90	133	1.58	Case

PL E0615-5

No.	DESCRIPTION	GA Ref.	Quantity	REMARKS
1	**Cooling Fans**	42	1.0 PCE	FE 100 .NDL .6N.V7 Ziehl-Abegg

Revision	0	1	2	Note	VALIDATION	PAGE
Date	12-Oct-10	20-Dec-10	16-Dec-11			6/10
Drawn	CHY	CHY	SND			
Checked	YDMN	YDMN				
Approved	HSM	HSM				

SHIPPER

Kawasan Industri Menara Permai Kav. 10
Jl. Raya narogong Km 23,852
Cileungsi, Bogor 16820 - Indonesia
Ph. 62 (21) 8230430 (Hunting)

PACKING LIST

Document Number

TD/PL E0615

PROJECT NAME	GI Jababeka
CONTRACT NO.	192.PJ/611/P3B/2010
WORK NO.	E0615
SERIAL NO.	3011100079
GA DRAWING NO.	298/E0615
CAPACITY	60 MVA
VOLTAGE	150/20 kV

CONSIGNEE/ CUSTOMER
PT. PLN (PERSERO)

DIMENSION (m)			WEIGHT (kg)		Volume (m³)	PACK TYPE
L	W	H	Net	Gross		
2.80	1.14	0.68	405	585	2.17	Case

PL E0615-6

No.	DESCRIPTION	GA Ref.	Quantity		REMARKS
1	**HV PHASE BUSHINGS**	1	3.0	PCE	COT 750-800 TRENCH
2	CAP HV PHASE BUSHINGS	-	3.0	PCE	
3	ARCHING HORNS HV PHASE BUSHINGS	-	3.0	set	

Revision	0	1	2	Note	VALIDATION	PAGE
Date	12-Oct-10	20-Dec-10	16-Dec-11			7/10
Drawn	CHY	CHY	SND			
Checked	YDMN	YDMN				
Approved	HSM	HSM				

SHIPPER

Kawasan Industri Menara Permai Kav. 10
Jl. Raya narogong Km 23,852
Cileungsi, Bogor 16820 - Indonesia
Ph. 62 (21) 8230430 (Hunting)

PACKING LIST

Document Number

TD/PL E0615

PROJECT NAME	GI Jababeka
CONTRACT NO.	192.PJ/611/P3B/2010
WORK NO.	E0615
SERIAL NO.	3011100079
GA DRAWING NO.	298/E0615
CAPACITY	60 MVA
VOLTAGE	150/20 kV

CONSIGNEE/ CUSTOMER
PT. PLN (PERSERO)

DIMENSION (m)			WEIGHT (kg)		Volume (m³)	PACK TYPE
L	W	H	Net	Gross		
1.40	1.20	0.60	140	218	1.01	Case

PL E0615-7

No.	DESCRIPTION	GA Ref.	Quantity		REMARKS
1	**LV PHASE BUSHING**	3	3	PCE	FDH 30NF / 2000 A Zep WW
2	LV NEUTRAL PHASE BUSHING	4	1.0	PCE	FDH 30NF / 2000 A Zep WW

Revision	0	1	2	Note	VALIDATION	PAGE
Date	12-Oct-10	20-Dec-10	16-Dec-11			8/10
Drawn	CHY	CHY	SND			
Checked	YDMN	YDMN				
Approved	HSM	HSM				

SHIPPER

Kawasan Industri Menara Permai Kav. 10
Jl. Raya narogong Km 23,852
Cileungsi, Bogor 16820 - Indonesia
Ph. 62 (21) 8230430 (Hunting)

PACKING LIST

Document Number

TD/PL E0615

PROJECT NAME	GI Jababeka
CONTRACT NO.	192.PJ/611/P3B/2010
WORK NO.	E0615
SERIAL NO.	3011100079
GA DRAWING NO.	298/E0615
CAPACITY	60 MVA
VOLTAGE	150/20 kV

CONSIGNEE/ CUSTOMER
PT. PLN (PERSERO)

DIMENSION (m)			WEIGHT (kg)		Volume (m³)	PACK TYPE
L	W	H	Net	Gross		
1.40	1.20	0.60	140	218	1.01	Case

PL E0615-8

No.	DESCRIPTION	GA Ref.	Quantity		REMARKS
1	**HV NEUTRAL PHASE BUSHING**	2	1	PCE	FDH 30NF / 630 A Zep WW
2	TERTIARY BUSHING	6	2.0	PCS	FDH 10NF / 630 A zep WW
3	Adaptor HVN Bushing		1.0	set	
4	Cable For Monitoring HV Bushings		3.0	PCS	
5	Manual Book For Monitoring HV Bushings		1.0	pcs	
6	CU Bar Tertiary Bushing	-	1.0	PCE	

Revision	0	1	2	Note	VALIDATION	PAGE
Date	12-Oct-10	20-Dec-10	16-Dec-11			9/10
Drawn	CHY	CHY	SND			
Checked	YDMN	YDMN				
Approved	HSM	HSM				

SHIPPER

Kawasan Industri Menara Permai Kav. 10
Jl. Raya narogong Km 23,852
Cileungsi, Bogor 16820 - Indonesia
Ph. 62 (21) 8230430 (Hunting)

PACKING LIST

Document Number

TD/PL E0615

PROJECT NAME	GI Jababeka
CONTRACT NO.	192.PJ/611/P3B/2010
WORK NO.	E0615
SERIAL NO.	3011100079
GA DRAWING NO.	298/E0615
CAPACITY	60 MVA
VOLTAGE	150/20 kV

CONSIGNEE/ CUSTOMER
PT. PLN (PERSERO)

DIMENSION (m)			WEIGHT (kg)		Volume (m³)	PACK TYPE
L	W	H	Net	Gross		
1.40	1.00	0.60	35	103	0.84	Case

PL E0615-9

No.	DESCRIPTION	GA Ref.	Quantity		REMARKS
	ACCESSORIES				
1	Gaskets - HV Phase Bushings	-	3.0	PCS	O Ring Viton
2	Gaskets - HV Neutral Bushing	-	2.0	PCS	O Ring Viton
3	Gaskets - LV Phase Bushings	-	3.0	PCS	O Ring Viton
4	Gaskets - LV Neutral Bushing	-	1.0	PCS	O Ring Viton
5	Gaskets - HV Turret	-	3.0	PCS	O Ring Viton
6	Gaskets - LV Bushing Caver	-	1.0	PCS	O Ring Viton
7	Gaskets - Buchholz Relay Main Tank	-	10.0	PCS	Klingerit + O Ring Viton (6 + 4)
8	Gaskets - Pipe Connections (Vent) Turret-Buchholz relay	-	13.0	PCS	O Ring Viton
9	Gaskets - Radiator throttle valve	-	24.0	PCS	Klingerit + Viton O-Ring (12+12)
10	Gaskets - O.L.T.C. Protective Relay	-	10.0	PCS	Klingerit + O Ring Viton (8 + 2)
11	Gasket - Drain / Filling valve flange Conservator/OLTC	-	10.0	PCS	NW 50 (ORING Viton+Klingrit) (4 + 6)
12	Gasket - By Pass Pipe OLTC	-	6.0	PCS	NW 15 (Nebar + Viton O-Ring) (3 + 3)
13	Gasket - Dehydrating Breather Conservator Main Tank	-	2.0	PCS	DIN42562 2kg(Oring Viton+Nebar)(1 + 1)
14	Gasket - Dehydrating Breather Conservator OLTC	-	2.0	PCS	DIN42567 1kg (O Ring Viton+Nebar (1 + 1)
15	AKZO Interzinc 52 + Akzo Thinner GTA220	-	1.0	CAN	5 ltr/can
16	Bolts " L "	-	6.0	PCS	
17	Gaskets Core Earthing Cover	-	1.0	PCS	
18	Paint Brush+Curil K2+Sale Tape	-	1.0	SET	2 + 1 + 2
19	Dehydrating Breather For Conservator Main Tank	23	1.0	SET	Mtrab DB 200-T (Missing)
20	Dehydrating Breather For Conservator L.T.C.	25	1.0	SET	Mtrab DB 100-T
21	Floater For Oil Level Conservator Main Tank		1.0	PCE	Inside Conservator
22	Gas Sampling Device - Buchholz Relay	16.1	1.0	SET	CEDASPE RG3.3
23	Gaskets - TERTIARY Bushings	-	2.0	PCS	O Ring Viton
24	Flag Connector LV-LVN Bushings		4.0	SET	
25	Gas Sampling Pipe		1.0	PCE	
26	AKZO Interthane 990 RAL7033 + AKZO Thinner GTA713		1.0	CAN	5 ltr/can
27	Cable Tie	-	4.0	SET	
28	Arcing Horns LV+LVN Bushing	-	4.0	SET	Missing
29	CU Bar Tertiary Bushing	-	1.0	PCE	Inside HVN Bushings Box
30	Post Insulator		2.0	PCS	
31	Atmoseal (Air Bag - install inside conservator)		1.0	set	With gaskets NW 25
32	Clamp Logo CG Pauwels		4.0	set	

Revision	0	1	2	Note	VALIDATION	PAGE
Date	12-Oct-10	20-Dec-10	16-Dec-11			10/10
Drawn	CHY	CHY	SND			
Checked	YDMN	YDMN				
Approved	HSM	HSM				

FORM:QP-04-0206/V01/R01

PAUWELS TRAFO

POWER TRANSFORMER

SERIAL NUMBER	3011100079
YEAR OF MANUFACTURE	2011
STANDARD	IEC 60076
RATED POWER	36/60 MVA
COOLING	ONAN/ONAF-60/100%
FREQUENCY	50 Hz
PHASES	3
INSULATION LEVELS	LI 650 AC 275- LI 95 AC 38/ LI 125 AC 50/ LI 125 AC 50
CONNECTION SYMBOL	YNyn0(d)
TAP CHANGER	MR VV III 400 Y - 76kV + ED100

MAX. ALTITUDE			1000 m
TEMP. RISE BELOW 1000m ALTITUDE	TOP OIL		50°C
	AVERAGE WIND.		55°C
VACUUM WITHSTAND CAPABILITY	TANK		100%
	CONSERVATOR		100%
	RADIATOR		100%
TYPE OF OIL			NYNAS NITRO LIBRA
MASS	TOTAL		116200 kg
	OIL		20700 kg
	UNTANKING		75600 kg

TAP	VOLT		MVA	SHORT CIRCUIT IMPEDANCE (%)
	HV	LV		
1	165000	20000	60	13.080
9	150000	20000	60	12.336
17	135000	20000	60	11.873

HIGH VOLTAGE-TERMINALS : 1N-1U-1V-1W

TAP	VOLT	AMPERE	MVA	CONNECTION TAP CHANGER	
1	165000	209.9	60	2 - 12	
2	163125	212.3	60	2 - 11	
3	161250	214.8	60	2 - 10	3 - 4
4	159375	217.3	60	2 - 9	
5	157500	219.9	60	2 - 8	
6	155625	222.5	60	2 - 7	
7	153750	225.3	60	2 - 6	
8	151875	228.0	60	2 - 5	
9A	150000	230.9	60	2 - 4	
9B	150000	230.9	60	2 - 3	
9C	150000	230.9	60	2 - 12	
10	148125	233.8	60	2 - 11	
11	146250	236.8	60	2 - 10	
12	144375	239.9	60	2 - 9	
13	142500	243.0	60	2 - 8	
14	140625	246.3	60	2 - 7	
15	138750	249.6	60	2 - 6	3 - 12
16	136875	253.0	60	2 - 5	
17	135000	256.6	60	2 - 4	

LOW VOLTAGE-TERMINALS : 2N-2U-2V-2W

VOLT	AMPERE	MVA
20000	1732.0	60

TERTIARY-TERMINALS : 3U1-3W2

VOLT	AMPERE	MVA
10210	653.0√3	20

CURRENT TRANSFORMER

38.a	350/2A	CL.3	20 VA
38.b	2400/2A	CL.3	20 VA

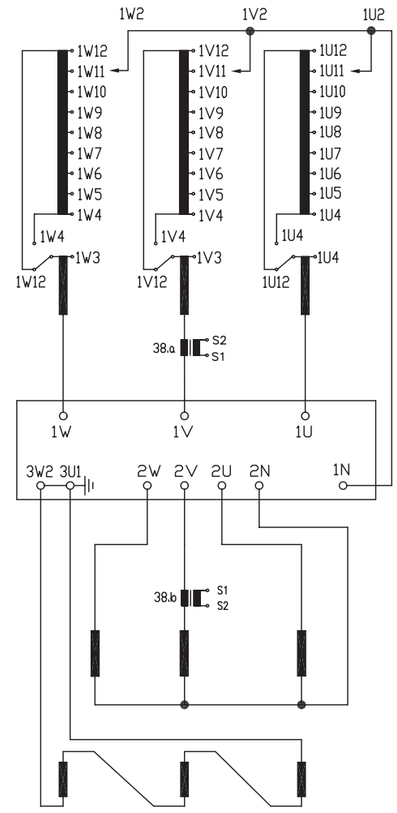

Manufactured by PT CG Power Systems Indonesia

1677/E0615/A

1677/E0615/B

NOTE : THE RATING PLATE WILL BE STAMPED WITH ACTUAL PERCENTAGE IMPEDANCE VALUES OBTAINED DURING FINAL ROUTINE TESTING OF TRANSFORMER

Material : Stainless steel 304
Execution : Black letters on clear background
Dimension : 395 x 220 x 1 mm

AS BUILT

REV	ESTABLISHED DATE	CHECKED DATE	APPROVED DATE	MODIFICATIONS	STATUS
3	CHY 24.03.2011	GNWN 25.03.2011	SMD 25.03.2011	Mass	NEN
2	SDQ 07.02.2011	GNWN 08.02.2011	SMD 08.02.2011	As per PLN Comment date 28 January 2010	EN
1	SDQ 27.12.2010	GNWN 27.12.2010	SMD 28.12.2010	As per DRM date 8 - 10 December 2010	EN
0	SDQ 27.09.2010	GNWN 28.09.2010	SMD 29.09.2010	Original Issue	EN

CLIENT : **PT. PLN (PERSERO)**
PENYALURAN DAN PUSAT PENGATUR BEBAN JAWA BALI

SUPPLIER : **PT. CG POWER SYSTEM INDONESIA**
Kawasan Industri Menara Permai Kav.14
Jl. Raya Narogong 23.8, Cileungsi - Bogor

PENGADAAN TRAFO TENAGA 150/20 KV DAN 70/20 KV DI LINGKUNGAN PT PLN (PERSERO) (PAKET 1)

CONTRACT No : 192.PJ/611/P3B/2010 | DATE : 20 OKTOBER 2010

Issued	Checked	Std Checked	Released
Originating Form	Superseded Drawing	Superseded By	Without Sop Item list

Sop Item List Of Same No
Sop Item List Of Different No

TITLE OF DRAWING
RATING & SCHEMATIC PLATE
36/60 MVA - 150/20 kV POWER TRANSFORMER

SCALE: NTS

Size	Langguage	Sheet No.	No. of sheet
A2	E	1	1

PAUWELS TRAFO

PERCIE'S DRAWING No.

PT. CGPSI DRAWING No. **1677/E0615/AB**

PLN'S DRAWING No.

REVISION 3

OIL PIPING AND VALVE LOCATION

PAUWELS TRAFO

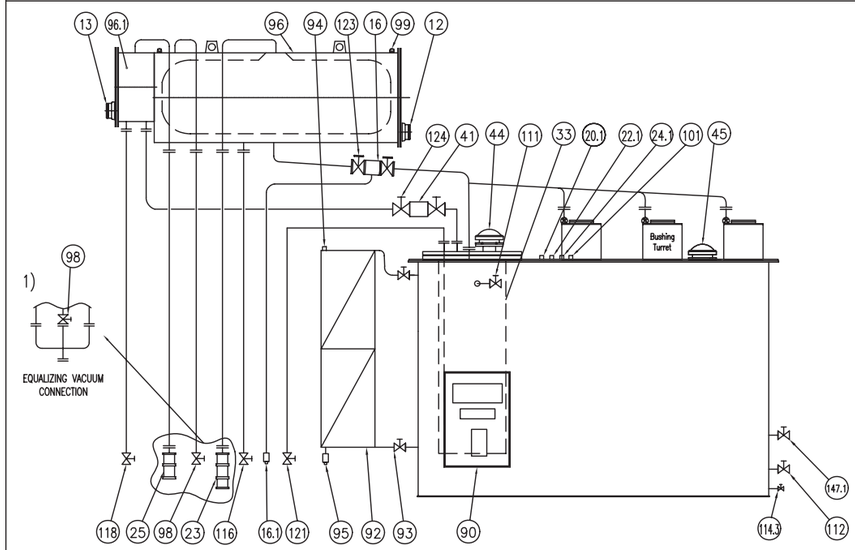

12. MAGNETIC OIL LEVEL INDICATOR. – MAIN TANK
13. MAGNETIC OIL LEVEL INDICATOR. – O.L.T.C
16. BUCHHOLZ RELAY CEDASPE – BF 80/10
16.1 GAS SAMPLING DEVICE – CEDASPE – RG3
20.1. THERMOMETER POCKET FOR OTI
22.1. THERMOMETER POCKET FOR WTI–HV SIDE
23. DEHYDRATING BREATHER FOR MAIN TANK
24.1 THERMOMETER POCKET FOR WTI–LV SIDE
25. DEHYDRATING BREATHER FOR O.L.T.C
33. ON LOAD TAP CHANGER
41. PROTECTIVE RELAY O.L.T.C – RS2001
44. PRESSURE RELIEF DEVICE FOR O.L.T.C
45. PRESSURE RELIEF DEVICE FOR MAIN TANK
90. CONTROL CABINET
92. RADIATOR – DISCONNECTABLE
93. THROTTLE VALVES RADIATOR – DISCONNECTABLE TYPE – ø80 (3")
94. AIR VENT FOR RADIATOR – DIN 42558 TYPE 6
95. DRAIN PLUG FOR RADIATOR DIN 42558 TYPE 12A
96. CONSERVATOR MAIN TANK – (WITH ATMOSEAL)
96.1 CONSERVATOR – O.L.T.C
98. VACUUM PULLING VALVE FOR VACUUM PROCESS – ø25 (1")
99. AIR VENT – DIN 42558 TYPE 12A
101. THERMOMETER POCKET – SPARE
111. OIL FILTER & FILLING VALVE TOP – ø50 (2")
112. DRAIN & OIL FILTER VALVE BOTTOM – ø50 (2")
114.3 BOTTOM OIL SAMPLING VALVE – ø15 (1/2")
116. DRAIN & FILLING VALVE CONSERVATOR – MAIN TANK – ø50 (2")
118. DRAIN & FILLING VALVE CONSERVATOR – O.L.T.C. – ø50 (2")
121. DRAIN & FILLING VALVE – O.L.T.C – ø25 (1")
123. SHUT–OFF VALVE CONSERVATOR MAIN TANK – ø80 (3")
124. SHUT–OFF VALVE CONSERVATOR – O.L.T.C – ø25 (1")
147.1 HYDRANT M2 SHUT–UP VALVE ø40 (1 1/2")

POSITION OF VALVES	93	94	95	98	111	112	114.3	116	118	121	123	124	147.1
TRANSFORMER IN SERVICE	○	●	●	●	●	●	●	●	●	●	○	○	●
FILLING UNDER VACUUM	○	●	●	○	○	●	●	●	●	○	○	○	●
FILTERING UNDER VACUUM (SEPARATE) :													
– TRANSFORMER MAIN TANK	○	●	●	●	○	○	●	●	●	●	○	○	●
– ON LOAD TAP CHANGER	○	●	●	●	●	●	●	●	○	○	○	○	●
DURING TRANSPORT	●	●	●	–	●	●	●	–	–	–	–	–	●
BEFORE APPLYING VACUUM TREATMENT SEE MAINTENANCE INSTRUCTION													

○ NORMALLY OPEN
● NORMALLY CLOSED
– DISMANTLED

1) REMOVE THE BREATHERS & INSTALL EQUALIZING VACUUM CONNECTION DURING VACUUM PROCESS

1677/E0615/C

Material : Stainless steel AISI 304
Thickness : 1 mm (0,04")
Execution : Black letter on clear background
Dimension : 420 x 297 mm

AS BUILT DRAWING

REV	DATE	DATE	DATE	MODIFICATIONS	STATUS
3	CHY 22.03.2011	YDMN 23.03.2011	HSM 23.03.2011	As Built	-
2	CHY 01.02.2011	YDMN 02.02.2011	HSM 02.02.2011	As Per PLN Comment dated 28.01.2011	NEN
1	CHY 14.12.2010	YDMN 15.12.2010	HSM 15.12.2010	As Per DRM dated 8-10.12.2010	EN
0	CHY 04.10.2010	YDMN 05.10.2010	HSM 05.10.2010	Original Issue	-
	ESTABLISHED	CHECKED	APPROVED		

CLIENT :

PT. PLN (PERSERO)
PENYALURAN DAN PUSAT PENGATUR BEBAN JAWA BALI

SUPPLIER :

PT. CG POWER SYSTEMS INDONESIA
Kawasan Industri Menara Permai Kav. 10
Jl. Raya Narogong 23.8, Cileungsi - Bogor

PENGADAAN TRAFO TENAGA 150/20 KV
DAN 70/20 KV DI LINGKUNGAN PT.PLN (PERSERO)
(PAKET 1)

CONTRACT No : 192.PJ/611/P3B/2010
DATE : 20 OKTOBER 2010

Issued	Checked	Std Checked	Released
Originating Form	Superseded Drawing	Superseded By	Without Sop Item list

TITLE OF DRAWING

OIL PIPING AND VALVE LOCATION
150/20 kV - 36/60 MVA
POWER TRANSFORMER

SCALE 1:1

Sop Item List Of Same No
Sop Item List Of Different No

Serial Number	Destination
3011100079	GI JABABEKA

Size	Langguage	Sheet No.	No. of sheet
A1	E	1	1

PERCIE'S DRAWING No.

PT. CGPSI DRAWING No. **1677/E0615/C**

PLN'S DRAWING No.

REVISION 3

PT CG POWER SYSTEMS INDONESIA

KAWASAN INDUSTRI MENARA PERMAI KAV. NO. 10
JL. RAYA NAROGONG CILEUNGSI - BOGOR 16820
I N D O N E S I A

LAYOUT AND SCHEMATIC DIAGRAM FOR CONTROL CABINET 150/20 kV 36/60 MVA

PT. PLN (PERSERO)
GI JABABEKA

USED LOCATION :

+TX : TRANSFORMER
+CC : CONTROL CUBICLE
+MD : MOTOR DRIVE

AS BUILT

REV	NAME	DATE		DESCRIPTION
1	BGS	IDT	HSM	AS BUILT
	22.03.2011	22.03.2011	22.03.2011	
0	BGS	IDT	HSM	Original Issue
	14.01.2011	14.01.2011	14.01.2011	
REV	ESTABLISHED DATE	CHECKED DATE	APPROVED DATE	MODIFICATIONS — STATUS

CLIENT :

PT. PLN (PERSERO)
PENYALURAN DAN PUSAT PENGATUR BEBAN JAWA BALI

SUPPLIER :

PT. CG POWER SYSTEMS INDONESIA
Kawasan Industri Menara Permai Kav. 10
Jl. Raya Narogong 23.8, Cileungsi - Bogor

PENGADAAN TRAFO TENAGA 150/20 KV
DAN 70/20 KV DI LINGKUNGAN PT PLN (PERSERO)
(PAKET 1)

CONTRACT No : 192.PJ/611/P3B/2010 — DATE : 20 OKTOBER 2010

Issued	Checked	Std Checked	Released
Originating Form	Superseded Drawing	Superseded By	Without Sop Item list

TITLE OF DRAWING
LAYOUT AND SCHEMATIC DIAGRAM 150/20 kV - 36/60 MVA POWER TRANSFORMER

SCALE: NTS

Sop Item List Of Same No
Sop Item List Of Different No

Serial Number	Destination
3011100079	GI Jababeka

Size	Langguage	Sheet No.	No. of sheet
A3	E	1	9

PERCIE'S DRAWING No.
PT. CGPSI DRAWING No. **490/E0615/A**
PLN'S DRAWING No.
REVISION 1

	NAME	DATE	REFERENCE	CUSTOMER	TITLE	DRAWING No.	REV
DRAWN	BGS	14/01/2011	E0615	PT. PLN (PERSERO)	SCHEMATIC DIAGRAM BUSHING MONITORING PANEL COVER	491/E0615/A	1
CHECK	IDT	14/01/2011	36/60 MVA				
APPROVED	HSM	14/01/2011	150/20 kV – 50 Hz	INDONESIA			

PAUWELS TRAFO

SHT 1 OF 6

OUR DRAWINGS MAY NOT BE REPRODUCED WITHOUT OUR PERMISSION
FORM PPT-04-054

TABLE OF CONTENT

SHEET	DRAWING DESCRIPTION	REV	REV DATE
1	COVER	3	22/03/2011
2	TABLE OF CONTENT	3	22/03/2011
3	ACCESSORIES AND CURRENT TRANSFORMER	3	22/03/2011
4	SUPPLY AND COOLING FANS	3	22/03/2011
5	SIGNALLING	3	22/03/2011
6	TERMINAL ARRANGEMENT	3	22/03/2011
7	BILL OF MATERIAL	3	22/03/2011
8	BILL OF MATERIAL	3	22/03/2011
9	PANEL LAYOUT	3	22/03/2011

R	NAME	DATE	DESCRIPTION
3	BGS	22.03.11	AS BUILT
2	BGS	13.12.10	AS per DRM date 8–10.12.2010
1	BGS	01.02.11	AS per PLN Comment date 28.01.2011

OUR DRAWINGS MAY NOT BE REPRODUCED WITHOUT OUR PERMISSION

FORM PPT-04-054

	NAME	DATE
DRAWN	BGS	24/11/2010
CHECK	IDT	24/11/2010
APPROVED	HSM	24/11/2010

REFERENCE: E0615, 36/60 MVA, 150/20 kV – 50 Hz

CUSTOMER: PT. PLN (PERSERO), INDONESIA

PAUWELS TRAFO

TITLE: SCHEMATIC, TABLE OF CONTENT

DRAWING No. 490/E0615/A

REV 3

SHT 2 OF 9

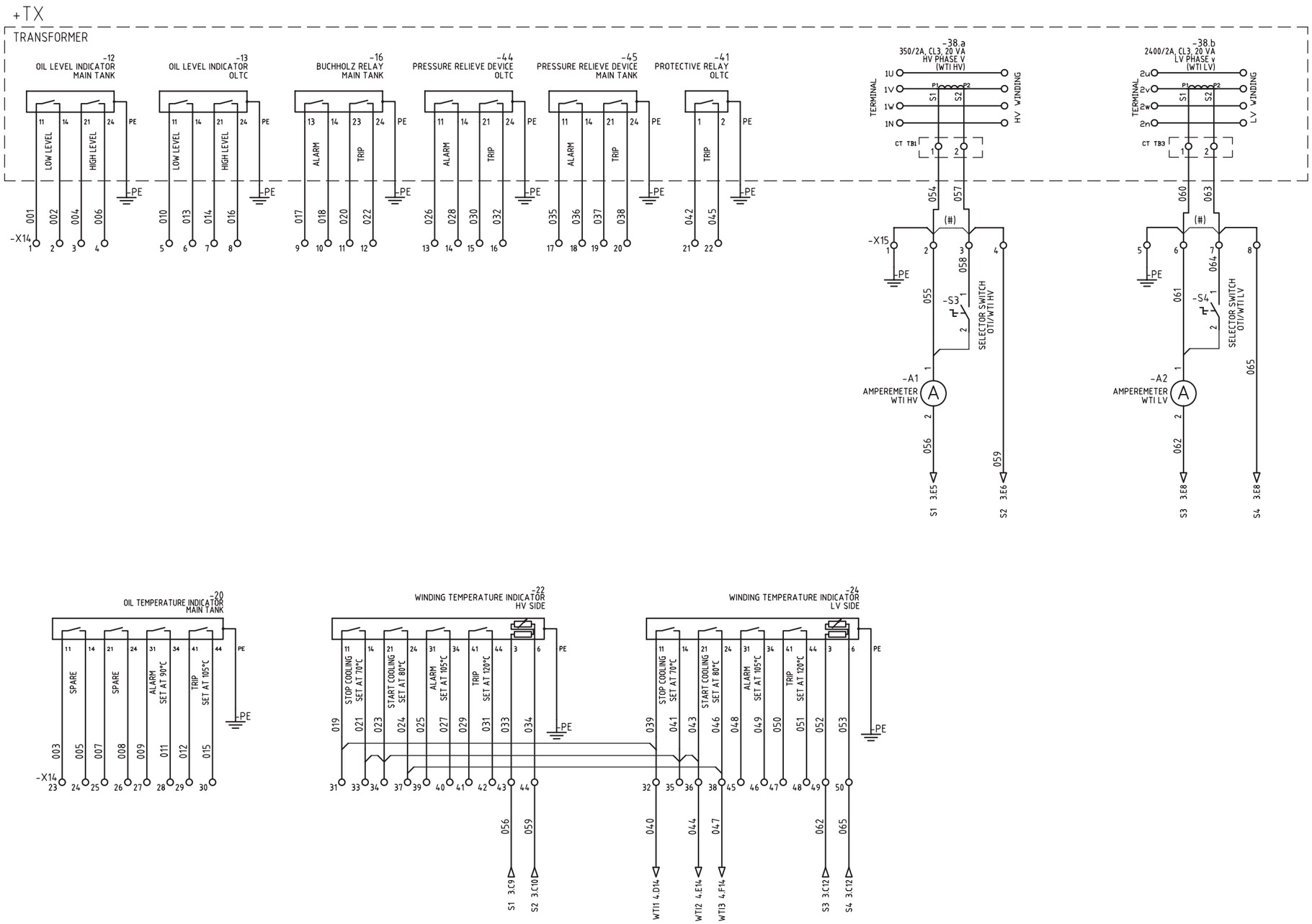

NOTE : (#) JUMPERED WHILE UNLOAD

R	NAME	DATE	DESCRIPTION
3	BGS	22.03.11	AS BUILT
2	BGS	13.12.10	AS per DRM date 8-10.12.2010
1	BGS	01.02.11	AS per PLN Comment date 28.01.2011

OUR DRAWINGS MAY NOT BE REPRODUCED WITHOUT OUR PERMISSION

FORM PPT-04-054

	NAME	DATE	REFERENCE	CUSTOMER	TITLE	DRAWING No.	REV	SHT 3
DRAWN	BGS	24/11/2010	E0615	PT. PLN (PERSERO)	SCHEMATIC	490/E0615/A	3	OF 9
CHECK	IDT	24/11/2010	36/60 MVA		ACCESSORIES AND CURRENT TRANSFORMER			
APPROVED	HSM	24/11/2010	150/20 kV – 50 Hz	INDONESIA				

PAUWELS TRAFO

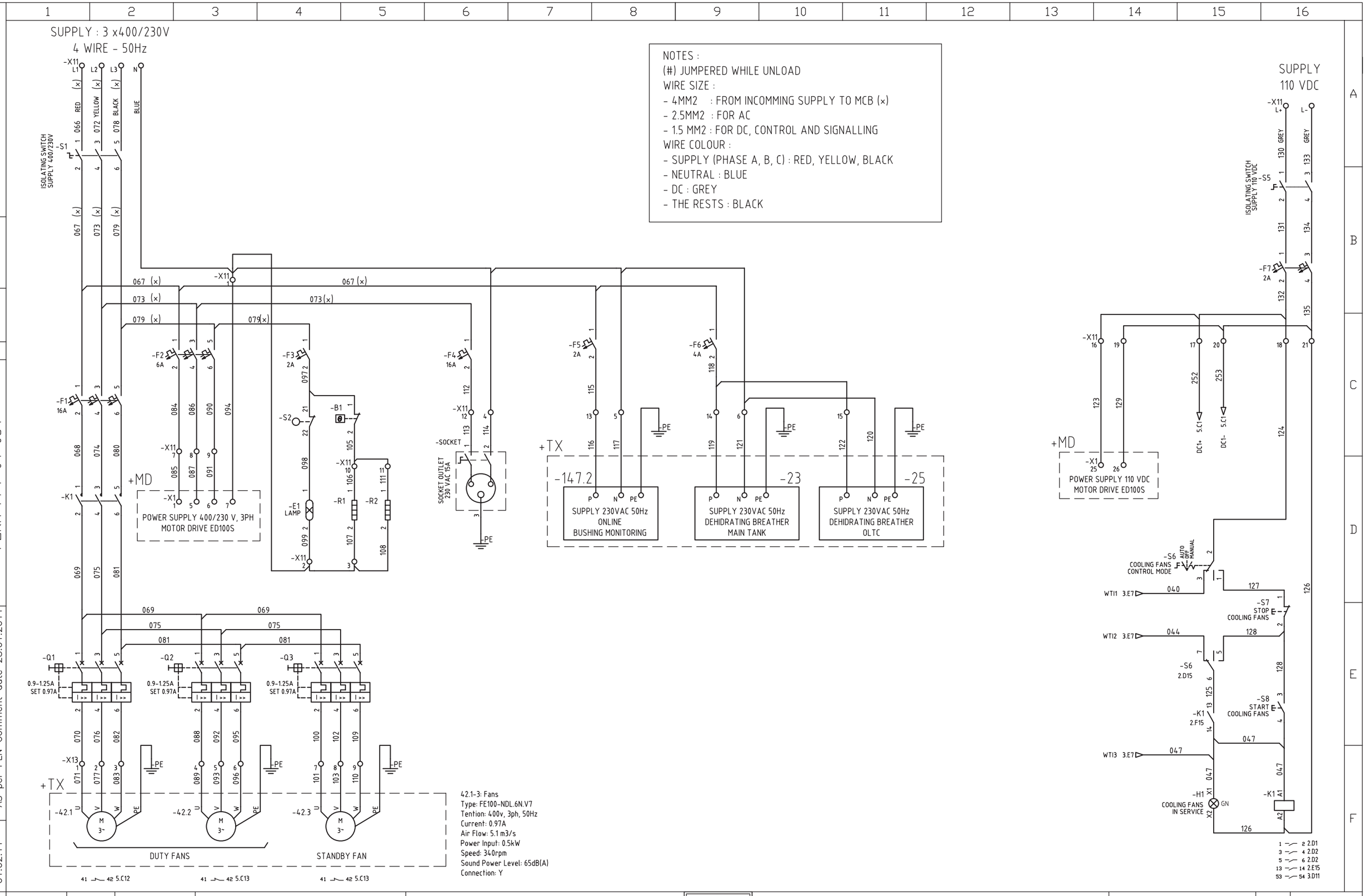

R	NAME	DATE	DESCRIPTION
3	BGS	22.03.11	AS BUILT

OUR DRAWINGS MAY NOT BE REPRODUCED WITHOUT OUR PERMISSION

FORM PPT-04-054

R	NAME	DATE	DESCRIPTION
1	BGS	13.12.10	AS per DRM date 8-10.12.2010
2	BGS	01.02.11	AS per PLN Comment date 28.01.2011

	NAME	DATE	REFERENCE	CUSTOMER	TITLE	DRAWING No.	REV
DRAWN	BGS	24/11/2010	E0615	PT. PLN (PERSERO)	SCHEMATIC POWER SUPPLY AND COOLING FANS	490/E0615/A	3
CHECK	IDT	24/11/2010	36/60 MVA				
APPROVED	HSM	24/11/2010	150/20 kV – 50 Hz	INDONESIA			

PAUWELS TRAFO

SHT 4 OF 9

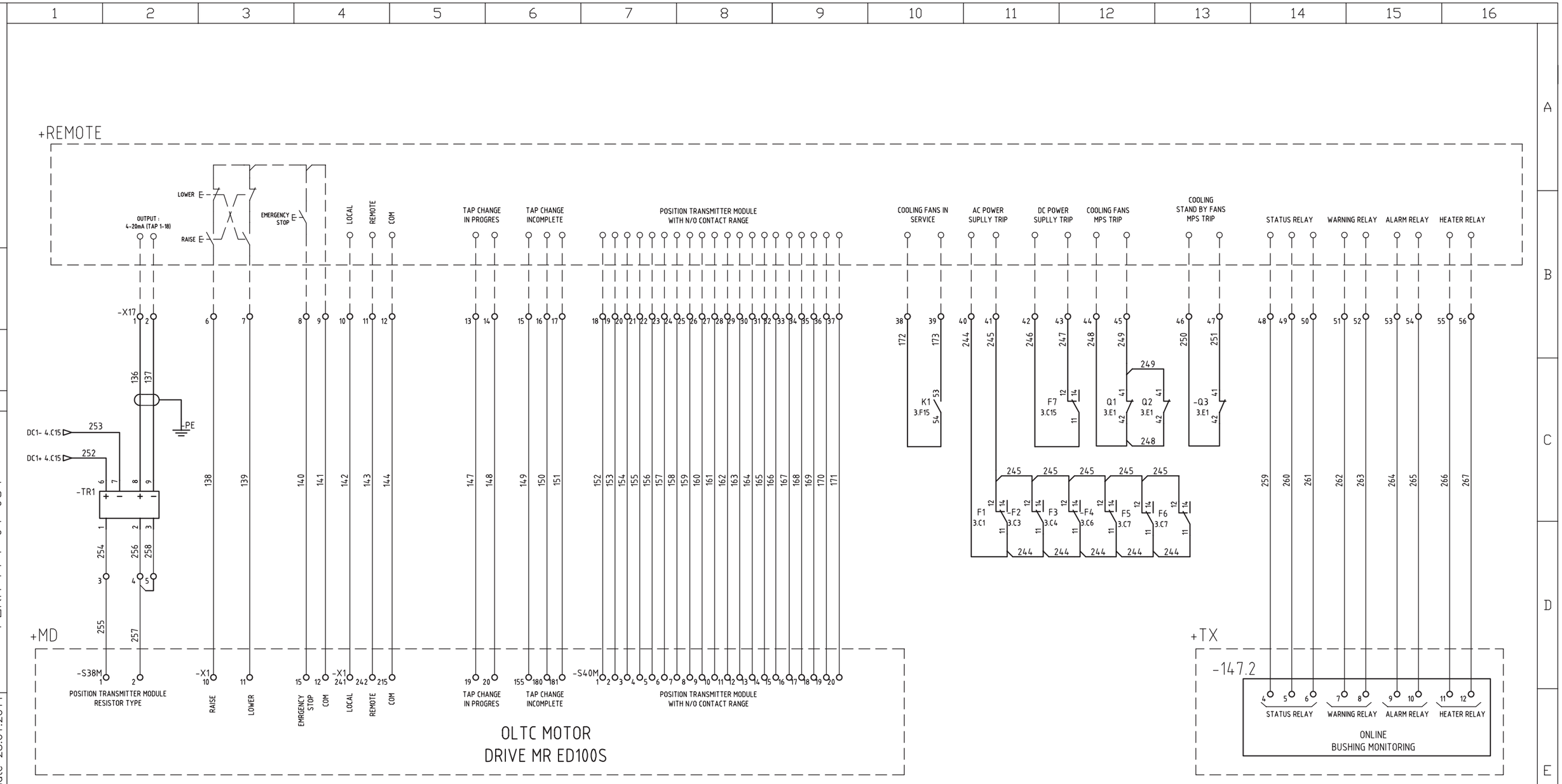

R	NAME	DATE	DESCRIPTION
3	BGS	22.03.11	AS BUILT
2	BGS	13.12.10	AS per DRM date 8-10.12.2010
1	BGS	01.02.11	AS per PLN Comment date 28.01.2011

OUR DRAWINGS MAY NOT BE REPRODUCED WITHOUT OUR PERMISSION

FORM PPT-04-054

	NAME	DATE	REFERENCE	CUSTOMER	TITLE	DRAWING No.	REV	SHT 5
DRAWN	BGS	24/11/2010	E0615	PT. PLN (PERSERO)	SCHEMATIC	490/E0615/A	3	OF 9
CHECK	IDT	24/11/2010	36/60 MVA		MOTOR DRIVE AND SIGNALLING			
APPROVED	HSM	24/11/2010	150/20 kV – 50 Hz	INDONESIA				

PAUWELS TRAFO

TERMINAL ARRANGEMENT

TERMINAL X14

Location1	Device1	Pin1	Wire1	Jumpers	Number	Wire2	Pin2	Device2	Location2
				○ ○ ○	1	001	11	13	+TX
				○ ○ ○	2	002	14	13	+TX
				○ ○ ○	3	004	21	13	+TX
				○ ○ ○	4	006	24	13	+TX
				○ ○ ○	5	010	11	13	+TX
				○ ○ ○	6	013	14	13	+TX
				○ ○ ○	7	014	21	13	+TX
				○ ○ ○	8	016	24	13	+TX
				○ ○ ○	9	017	13	16	+TX
				○ ○ ○	10	018	14	16	+TX
				○ ○ ○	11	020	23	16	+TX
				○ ○ ○	12	022	24	16	+TX
				○ ○ ○	13	026	11	44	+TX
				○ ○ ○	14	028	14	44	+TX
				○ ○ ○	15	030	21	44	+TX
				○ ○ ○	16	032	24	44	+TX
				○ ○ ○	17	035	11	45	+TX
				○ ○ ○	18	036	14	45	+TX
				○ ○ ○	19	037	21	45	+TX
				○ ○ ○	20	038	24	45	+TX
				○ ○ ○	21	042	1	41	+TX
				○ ○ ○	22	045	2	41	+TX
				○ ○ ○	23	003	11	20	+CC
				○ ○ ○	24	005	14	20	+CC
				○ ○ ○	25	007	21	20	+CC
				○ ○ ○	26	008	24	20	+CC
				○ ○ ○	27	009	31	20	+CC
				○ ○ ○	28	011	34	20	+CC
				○ ○ ○	29	012	41	20	+CC
				○ ○ ○	30	015	44	20	+CC
				● ○ ○	31	019	11	22	+CC
+CC	S6	3	040	● ○ ○	32	039	11	24	+CC
				● ○ ○	33	021	14	22	+CC
				● ○ ○	34	023	21	22	+CC
				● ○ ○	35	041	14	24	+CC
+CC	S6	7	044	● ○ ○	36	043	21	24	+CC
				● ○ ○	37	024	24	22	+CC
+CC	H1	X1	047	● ○ ○	38	046	24	24	+CC
				○ ○ ○	39	025	31	22	+CC
				○ ○ ○	40	027	34	22	+CC
				○ ○ ○	41	029	41	22	+CC
				○ ○ ○	42	031	44	22	+CC
+CC	A1	2	056	○ ○ ○	43	033	3	22	+CC
+CC	X15	4	059	○ ○ ○	44	034	6	22	+CC
				○ ○ ○	45	048	31	24	+CC
				○ ○ ○	46	049	34	24	+CC
				○ ○ ○	47	050	41	24	+CC
				○ ○ ○	48	051	44	24	+CC
+CC	A2	2	062	○ ○ ○	49	052	3	24	+CC
+CC	X15	8	065	○ ○ ○	50	053	6	24	+CC
				○ ○ ○	51				
				○ ○ ○	52				
				○ ○ ○	53				
				○ ○ ○	54				
				○ ○ ○	55				

TERMINAL X17

Location1	Device1	Pin1	Wire1	Jumpers	Number	Wire2	Pin2	Device2	Location2
				○ ○ ○	1	136	8	TR1	+CC
				○ ○ ○	2	137	9	TR1	+CC
+MD	S38M	1	255	○ ○ ○	3	254	1	TR1	+CC
+MD	S38M	2	257	● ○ ○	4	256	2	TR1	+CC
				● ○ ○	5	258	3	TR1	+CC
+MD	X1	10	138	○ ○ ○	6				
+MD	X1	11	139	○ ○ ○	7				
+MD	X1	15	140	○ ○ ○	8				
+MD	X1	12	141	○ ○ ○	9				
+MD	X1	241	142	○ ○ ○	10				
+MD	X1	242	143	○ ○ ○	11				
+MD	X1	215	144	○ ○ ○	12				
+MD	X1	19	147	○ ○ ○	13				
+MD	X1	20	148	○ ○ ○	14				
+MD	X1	155	149	○ ○ ○	15				
+MD	X1	180	150	○ ○ ○	16				
+MD	X1	181	151	○ ○ ○	17				
+MD	S40M	1	152	○ ○ ○	18				
+MD	S40M	2	153	○ ○ ○	19				
+MD	S40M	3	154	○ ○ ○	20				
+MD	S40M	4	155	○ ○ ○	21				
+MD	S40M	5	156	○ ○ ○	22				
+MD	S40M	6	157	○ ○ ○	23				
+MD	S40M	7	158	○ ○ ○	24				
+MD	S40M	8	159	○ ○ ○	25				
+MD	S40M	9	160	○ ○ ○	26				
+MD	S40M	10	161	○ ○ ○	27				
+MD	S40M	11	162	○ ○ ○	28				
+MD	S40M	12	163	○ ○ ○	29				
+MD	S40M	13	164	○ ○ ○	30				
+MD	S40M	14	165	○ ○ ○	31				
+MD	S40M	15	166	○ ○ ○	32				
+MD	S40M	16	167	○ ○ ○	33				
+MD	S40M	17	168	○ ○ ○	34				
+MD	S40M	18	169	○ ○ ○	35				
+MD	S40M	19	170	○ ○ ○	36				
+MD	S40M	20	171	○ ○ ○	37				
+CC	K1	54	172	○ ○ ○	38				
+CC	K1	53	173	○ ○ ○	39				
+CC	F1	11	244	○ ○ ○	40				
+CC	F1	12	245	○ ○ ○	41				
+CC	F8	11	246	○ ○ ○	42				
+CC	F8	12	247	○ ○ ○	43				
+CC	Q1	42	248	○ ○ ○	44				
+CC	Q1	41	249	○ ○ ○	45				
+CC	Q3	42	250	○ ○ ○	46				
+CC	Q3	41	251	○ ○ ○	47				
+147.2	X1	4	259	○ ○ ○	48				
+147.2	X1	5	260	○ ○ ○	49				
+147.2	X1	6	261	○ ○ ○	50				
+147.2	X1	7	262	○ ○ ○	51				
+147.2	X1	8	263	○ ○ ○	52				
+147.2	X1	9	264	○ ○ ○	53				
+147.2	X1	10	265	○ ○ ○	54				
+147.2	X1	11	266	○ ○ ○	55				
+147.2	X1	12	267	○ ○ ○	56				
				○ ○ ○	57				
				○ ○ ○	58				
				○ ○ ○	59				
				○ ○ ○	60				

TERMINAL X11

Location1	Device1	Pin1	Wire1	Jumpers	Number	Wire2	Pin2	Device2	Location2
				○ ○ ○	L+	130	1	S5	+CC
				○ ○ ○	L−	133	3	S5	+CC
				○ ○ ○	L1	066	1	S1	+CC
				○ ○ ○	L2	072	3	S1	+CC
				○ ○ ○	L3	078	5	S1	+CC
				● ○ ○	N				
				● ○ ○	1	094	7	X1	+MD
				● ○ ○	2	099	2	E1	+CC
+CC	R2	2	108	● ○ ○	3	107	2	R1	+CC
				● ○ ○	4	114	2	SOCKET	+CC
				● ○ ○	5	117	N	XXX	+TX
+TX	25	N	120	● ○ ○	6	121	N	23	+TX
+CC	F2	2	084	○ ○ ○	7	085	1	X1	+MD
+CC	F2	4	086	○ ○ ○	8	087	5	X1	+MD
+CC	F2	6	090	○ ○ ○	9	091	6	X1	+MD
+CC	B1	2	105	● ○ ○	10	106	1	R1	+CC
				● ○ ○	11	111	1	R2	+CC
+CC	SOCKET	1	113	○ ○ ○	12	112	2	F5	+CC
+TX	XXX	P	116	○ ○ ○	13	115	2	F6	+CC
+TX	23	P	119	● ○ ○	14	118	2	F7	+CC
+CC	X11	14	118	● ○ ○	15	122	P	25	+TX
				● ○ ○	16	123	25	X1	+MD
				● ○ ○	17	252	6	TR1	+CC
+CC	S6	2	124	● ○ ○	18	132	2	F8	+CC
				● ○ ○	19	129	26	X1	+MD
				● ○ ○	20	253	7	TR1	+CC
+CC	F8	4	135	● ○ ○	21	126	A2	K1	+CC
				○ ○ ○	22				
				○ ○ ○	23				
				○ ○ ○	24				
				○ ○ ○	25				

TERMINAL X13

Location1	Device1	Pin1	Wire1	Jumpers	Number	Wire2	Pin2	Device2	Location2
+CC	Q1	2	070	○ ○ ○	1	071	U	42.1	+TX
+CC	Q1	4	076	○ ○ ○	2	077	V	42.1	+TX
+CC	Q1	6	082	○ ○ ○	3	083	W	42.1	+TX
+CC	Q2	2	088	○ ○ ○	4	089	U	42.2	+TX
+CC	Q2	4	092	○ ○ ○	5	093	V	42.2	+TX
+CC	Q2	6	095	○ ○ ○	6	096	W	42.2	+TX
+CC	Q3	2	100	○ ○ ○	7	101	U	42.3	+TX
+CC	Q3	4	102	○ ○ ○	8	103	V	42.3	+TX
+CC	Q3	6	109	○ ○ ○	9	110	W	42.3	+TX
				○ ○ ○	10				
				○ ○ ○	11				
				○ ○ ○	12				

TERMINAL X15

Location1	Device1	Pin1	Wire1	Jumpers	Number	Wire2	Pin2	Device2	Location2
				● ○ ○	1				
+TX	CTTB1	1	054	● ○ ○	2	055	1	A1	+CC
+TX	CTTB1	2	057	● ○ ○	3	058	1	S3	+CC
				● ○ ○	4	059	44	X14	+CC
				● ○ ○	5				
+TX	CTTB3	1	060	● ○ ○	6	061	1	A2	+CC
+TX	CTTB3	2	063	● ○ ○	7	064	1	S4	+CC
				● ○ ○	8	065	50	X14	+CC
				○ ○ ○	9				
				○ ○ ○	10				

R	DESCRIPTION	DATE	NAME
3	AS BUILT	22.03.11	BGS
2	AS per DRM date 8–10.12.2010	13.12.10	BGS
1	AS per PLN Comment date 28.01.2011	01.02.11	BGS

OUR DRAWINGS MAY NOT BE REPRODUCED WITHOUT OUR PERMISSION
FORM PPT-04-054

	NAME	DATE	REFERENCE	CUSTOMER	TITLE	DRAWING No.	REV	SHT 6
DRAWN	BGS	24/11/2010	E0615	PT. PLN (PERSERO)	SCHEMATIC	490/E0615/A	3	OF 9
CHECK	IDT	24/11/2010	36/60 MVA		TERMINAL ARRANGEMENT			
APPROVED	HSM	24/11/2010	150/20 kV – 50 Hz	INDONESIA				

PAUWELS TRAFO

BILL OF MATERIALS

TAG	QTY	DESCRIPTION	CATALOG	MFG	ITEM CODE
+CC-20	1	OTI MTST 4C/O, 10m,-20-140°C	MTST	MESSKO	ZA1697/E0615
+CC-22	1	WTI MTSTW 4C/O, 10m/0-150°C/CT 2A	MTSTW	MESSKO	ZA1697/E0615A
+CC-24	1	WTI MTSTW 4C/O, 10m/0-150°C/CT 2A	MTSTW	MESSKO	ZA1697/E0615A
+CC-90	1	Control Cabinet : 1200x800x400mm	H1200 W800 D400		ZA1285/E0615
	1	Wire Reinforced Glass	WIRE GLASS		ZA1285/E0615A
	1	SWING-OUT PANEL	SWING-OUT PANEL		ZA1285/E0615B
	1	Swing-Out Accessories	STAINLESS STEEL		ZA0285/Q52
+CC-A1	1	Ampere Meter EA 17, 5A, CT/5A, Cl 1.5%	LUMEL 0-5A	LUMEL	ZA0231/P04
+CC-A2	1	Ampere Meter EA 17, 5A, CT/5A, Cl 1.5%	LUMEL 0-5A	LUMEL	ZA0231/P04
+CC-B1	1	Thermostat KT 01146.9-00,1N/C	KT 01146.9-00	STEGO	ZA0243/P16
+CC-DAMPER	10	Gummi Metal Puffer B; 100x40	100X40		ZA0692/P06
+CC-E1	1	Lighting Lamp EBL/N- 8W 220-240V/50Hz	EBL/N- 8W		ZA0282/P18
+CC-F1	1	MCB C60N 25830 3P/16A Merlin Gerin 6KA	C60N 25830	MERLIN GERIN	ZA0246/P01
	1	Aux. Switch for MCB 27132 Merlin Gerin	27132	MERLIN GERIN	ZA0246/P11
+CC-F2	1	MCB C60N 25829 3P/6A Merlin Gerin 6KA	C60N 25829	MERLIN GERIN	ZA0246/P08
	1	Aux. Switch for MCB 27132 Merlin Gerin	27132	MERLIN GERIN	ZA0246/P11
+CC-F3	1	MCB C60N 25798 1P/2A Merlin Gerin 6KA	C60N 25798	MERLIN GERIN	ZA0246/P07
	1	Aux. Switch for MCB 27132 Merlin Gerin	27132	MERLIN GERIN	ZA0246/P11
+CC-F4	1	MCB C60N 25803 1P/16A Merlin Gerin 6KA	C60H 25803	MERLIN GERIN	ZA0246/P05
	1	Aux. Switch for MCB 27132 Merlin Gerin	27132	MERLIN GERIN	ZA0246/P11
+CC-F5	1	MCB C60N 25798 1P/2A Merlin Gerin 6KA	C60N 25798	MERLIN GERIN	ZA0246/P07
	1	Aux. Switch for MCB 27132 Merlin Gerin	27132	MERLIN GERIN	ZA0246/P11
+CC-F6	1	MCB C60N 25800 1P/4A Merlin Gerin 6KA	C60N 25800	MERLIN GERIN	ZA0246/P07
	1	Aux. Switch for MCB 27132 Merlin Gerin	27132	MERLIN GERIN	ZA0246/P11
+CC-F7	1	MCB C60N 25812 2P/2A Merlin Gerin 6kA	C60N 25812	MERLIN GERIN	ZA0246/Q38
	1	Aux. Switch for MCB 27132 Merlin Gerin	27132	MERLIN GERIN	ZA0246/P11
+CC-GND	1	Terminal Grounding NLS-CU 3/15 meter	NLS-CU 3/15	PHOENIX CONTACT	ZA0284/P86
+CC-H1	1	Pilot light unit, Cat. Ref: XB7-EV43	XB7-EV43	TELEMECANIQUE	ZA0282/P09
	1	Lamp 110V DC DL1-CE130 Telemecanique	DL1-CE130	TELEMECANIQUE	ZA0282/480
+CC-K1	1	Contactor LC1-D12FD,12A,110VDC,3P+1NO/NC	LC1-D12FD	TELEMECANIQUE	ZA0245/P11
	1	Aux.Contact LADN22,2NO+2NC,Telemecanique	LADN22	TELEMECANIQUE	ZA0245/P14
+CC-Q1	1	MPS: 3RV1011-0KA15, 0.9-1.25 A,+1NO/NC	3RV1011-0KA15	SIEMENS	ZA1245/Q10
+CC-Q2	1	MPS: 3RV1011-0KA15, 0.9-1.25 A,+1NO/NC	3RV1011-0KA15	SIEMENS	ZA1245/Q10
+CC-Q3	1	MPS: 3RV1011-0KA15, 0.9-1.25 A,+1NO/NC	3RV1011-0KA15	SIEMENS	ZA1245/Q10
+CC-R1	1	Heater PNHT 50/100,50W,220-240VAC	PNHT 50/100	CONHEAT	ZA0243/P18
+CC-R2	1	Heater PNHT 50/100,50W,220-240VAC	PNHT 50/100	CONHEAT	ZA0243/P18
+CC-RAIL	3	Mounting Rail NS 35/7.5	801733	PHOENIX CONTACT	ZA0284/P81
+CC-S1	1	ON/OFF Switch,S1,4P,660 V,40A	C26A324 600E/C260MK	KRAUS & NAIMER	ZA0223/P22
+CC-S2	1	Doorswitch With 1 NO/NC contact	Z-15HQ22	OMRON	ZA0281/R62
	1	Support Door Switch OMRON	SS 316	OMRON	ZA0281/R63
+CC-S3	1	Switch OIL/WINDING,S1,4P,690V,6A	CA10A220-600E	KRAUS & NAIMER	ZA0223/P29
+CC-S4	1	Switch OIL/WINDING,S1,4P,690V,6A	CA10A220-600E	KRAUS & NAIMER	ZA0223/P29
+CC-S5	1	ON/OFF Switch,S1,3P,660V,10A,	C10-A292-600E	KRAUS & NAIMER	ZA0223/P23
+CC-S6	1	Switch AUTO/OFF/MAN,S1,4P,690V,6A	CA10-A213-600VE1KN	KRAUS & NAIMER	ZA0223/P37
+CC-S7	1	Push Button ZB4-BZ105	ZB4BZ105	TELEMECANIQUE	ZA0281/150
	1	Operating Head ZB4-BA2	ZB4BA2	TELEMECANIQUE	ZA0281/152
+CC-S8	1	Push Button ZB4-BZ105	ZB4BZ105	TELEMECANIQUE	ZA0281/150
	1	Operating Head ZB4-BA2	ZB4BA2	TELEMECANIQUE	ZA0281/152
+CC-SILICA	2	Silicagel Polyethylene sacs,0.50 kg	0.50 KG	CGPSI	ZA0699/P04
	2	Silicagel Polyethylene sacs,0.25 kg	0.25 KG	CGPSI	ZA0699/P03
+CC-SOCKET	1	Switch 7012+Plug 278 16 A, IP 67, 2P+E	SWITCH 7012+PLUG 278	MENNEKES	ZA0280/P01

R	DESCRIPTION	DATE	NAME
3	AS BUILT	22.03.11	BGS
2	AS per DRM date 8-10.12.2010	13.12.10	BGS
1	AS per PLN Comment date 28.01.2011	01.02.11	BGS

OUR DRAWINGS MAY NOT BE REPRODUCED WITHOUT OUR PERMISSION

FORM PPT-04-054

	NAME	DATE	REFERENCE	CUSTOMER	TITLE	DRAWING No.	REV	SHT 7
DRAWN	BGS	24/11/2010	E0615	PT. PLN (PERSERO)	SCHEMATIC	490/E0615/A	3	OF 9
CHECK	IDT	24/11/2010	36/60 MVA		BILL OF MATERIAL			
APPROVED	HSM	24/11/2010	150/20 kV - 50 Hz	INDONESIA				

PAUWELS TRAFO

BILL OF MATERIALS

TAG	QTY	DESCRIPTION	CATALOG	MFG	ITEM CODE
+CC-TR1	1	Prog.Transducers : P20, 85-253Vac/dc	P20,85-253V	LUMEL	ZA0222/P16
+CC-VENT	4	Air Vent 1F065 051	1F065 051	QUINTELLA	ZA0693/190
+CC-X11	31	Terminal UK 10 N 10mm2	3005073	PHOENIX CONTACT	ZA0284/P82
	1	Transparant Cover PHOENIX (@1M)	AP3	PHOENIX CONTACT	ZA0284/Q48
	2	Hinge cover profile AP 3-TNS 35 PHOENIX	AP3-TNS 35	PHOENIX CONTACT	ZA0284/Q49
	5	Terminal ATP-UK 10mm2	3003224	PHOENIX CONTACT	ZA0284/P78
	2	Terminal DU-K 4/10 10mm2	3003020	PHOENIX CONTACT	ZA0284/P77
	1	Fixed Bridge FB 10-10	0203276	PHOENIX CONTACT	ZA0281/P62
	2	End bracket CLIPFIX 35	3022218	PHOENIX CONTACT	ZA0284/P79
	1	Terminal Marking ZB-10, QR: 1-10	1053027/1-10	PHOENIX CONTACT	ZA0281/P99
	1	Terminal Marking ZB-10, QR: 21-30	1053027/21-30	PHOENIX CONTACT	ZA0281/Q02
	1	Terminal Marking ZB-10, QR: L1,L2,L3,L+,L-	1053027/L	PHOENIX CONTACT	ZA0281/Q36
	1	Terminal Marking ZB-10, QR: N,GRD,A,B,C	1053027/PSU	PHOENIX CONTACT	ZA0281/Q35
	1	Terminal Marking ZB-10, QR: 11-20	1053027/11-20	PHOENIX CONTACT	ZA0281/Q01
+CC-X13	13	Terminal UK 5N 4mm2	3004362	PHOENIX CONTACT	ZA0284/P76
	2	Terminal DU-K 4/10 10mm2	3003020	PHOENIX CONTACT	ZA0284/P77
	2	End bracket CLIPFIX 35	3022218	PHOENIX CONTACT	ZA0284/P79
	1	Terminal Marking ZB-6, QR: 1-10	1051029/1-10	PHOENIX CONTACT	ZA0281/P66
	1	Transparant Cover PHOENIX (@1M)	AP3	PHOENIX CONTACT	ZA0284/Q48
	2	Hinge cover profile AP 3-TNS 35 PHOENIX	AP3-TNS 35	PHOENIX CONTACT	ZA0284/Q49
	10	Terminal ATP-UK 10mm2	3003224	PHOENIX CONTACT	ZA0284/P78
	1	Terminal Marking ZB-6, QR: 11-20	1051029/11-20	PHOENIX CONTACT	ZA0281/P68
+CC-X14	60	Terminal UK 5N 4mm2	3004362	PHOENIX CONTACT	ZA0284/P76
	2	Terminal DU-K 4/10 10mm2	3003020	PHOENIX CONTACT	ZA0284/P77
	2	Fixed Bridge FB 10-6	0203250	PHOENIX CONTACT	ZA0281/P61
	3	End bracket CLIPFIX 35	3022218	PHOENIX CONTACT	ZA0284/P79
	10	Terminal ATP-UK 10mm2	3003224	PHOENIX CONTACT	ZA0284/P78
	1	Terminal Marking ZB-6, QR: 1-10	1051029/1-10	PHOENIX CONTACT	ZA0281/P66
	1	Terminal Marking ZB-6, QR: 11-20	1051029/11-20	PHOENIX CONTACT	ZA0281/P68
	1	Terminal Marking ZB-6, QR: 21-30	1051029/21-30	PHOENIX CONTACT	ZA0281/P70
	1	Terminal Marking ZB-6, QR: 31-40	1051029/31-40	PHOENIX CONTACT	ZA0281/P72
	1	Terminal Marking ZB-6, QR: 41-50	1051029/41-50	PHOENIX CONTACT	ZA0281/P74
	1	Terminal Marking ZB-6, QR: 51-60	1051029/51-60	PHOENIX CONTACT	ZA0281/P76
	1	Transparant Cover PHOENIX (@1M)	AP3	PHOENIX CONTACT	ZA0284/Q48
	2	Hinge cover profile AP 3-TNS 35 PHOENIX	AP3-TNS 35	PHOENIX CONTACT	ZA0284/Q49
+CC-X15	15	Test Link Terminal URTKS PN.311087	0311087	PHOENIX CONTACT	ZA0281/P11
	1	Terminal Marking ZB-8, QR: 1-10	1052028/1-10	PHOENIX CONTACT	ZA0281/P17
	1	Terminal Marking ZB-8, QR: 11-20	1052028/11-20	PHOENIX CONTACT	ZA0281/P18
	2	Fixed Bridge FB10-RTK/S	0311171	PHOENIX CONTACT	ZA0281/P64
	4	Ending Plate D-URTK	3010020	PHOENIX CONTACT	ZA0281/P13
	10	Short Circuit Plug KSS-8	3000722	PHOENIX CONTACT	ZA0281/P12
	10	Partition plate ATS-RTK	0310224	PHOENIX CONTACT	ZA0281/P63
+CC-X17	54	Terminal UK 5N 4mm2	3004362	PHOENIX CONTACT	ZA0284/P76
	2	Terminal DU-K 4/10 10mm2	3003020	PHOENIX CONTACT	ZA0284/P77
	3	End bracket CLIPFIX 35	3022218	PHOENIX CONTACT	ZA0284/P79
	1	Terminal Marking ZB-6, QR: 1-10	1051029/1-10	PHOENIX CONTACT	ZA0281/P66
	1	Terminal Marking ZB-6, QR: 11-20	1051029/11-20	PHOENIX CONTACT	ZA0281/P68
	1	Terminal Marking ZB-6, QR: 21-30	1051029/21-30	PHOENIX CONTACT	ZA0281/P70
	1	Terminal Marking ZB-6, QR: 31-40	1051029/31-40	PHOENIX CONTACT	ZA0281/P72
	1	Terminal Marking ZB-6, QR: 41-50	1051029/41-50	PHOENIX CONTACT	ZA0281/P74
	1	Terminal Marking ZB-6, QR: 51-60	1051029/51-60	PHOENIX CONTACT	ZA0281/P76
	1	Transparant Cover PHOENIX (@1M)	AP3	PHOENIX CONTACT	ZA0284/Q48
	4	Hinge cover profile AP 3-TNS 35 PHOENIX	AP3-TNS 35	PHOENIX CONTACT	ZA0284/Q49

R	DESCRIPTION	DATE	NAME
3	AS BUILT	22.03.11	BGS
2	AS per DRM date 8-10.12.2010 AS per PLN Comment date 28.01.2011	13.12.10 01.02.11	BGS BGS
1			BGS

OUR DRAWINGS MAY NOT BE REPRODUCED WITHOUT OUR PERMISSION
FORM PPT-04-054

	NAME	DATE
DRAWN	BGS	24/11/2010
CHECK	IDT	24/11/2010
APPROVED	HSM	24/11/2010

REFERENCE: E0615
36/60 MVA
150/20 kV – 50 Hz

CUSTOMER: PT. PLN (PERSERO)
INDONESIA

PAUWELS TRAFO

TITLE: SCHEMATIC
BILL OF MATERIAL

DRAWING No.: 490/E0615/A

REV: 3

SHT 8 OF 9

ENCLOSURE SINGLE DOOR
MATERIAL : SHEET STEEL, THICKNESS 2 mm
DIMENTIONS : H1200 W800 D400
MOUNTING PLATE: H1090 W720 D2 mm

INDEX PROTECTIONS : IP 55
COLOR OF PAINTING:
- INSIDE : WHITE
- OUTSIDE : REFER TO TX

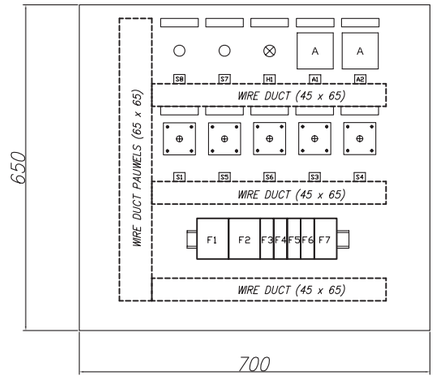

SWING-OUT PANEL

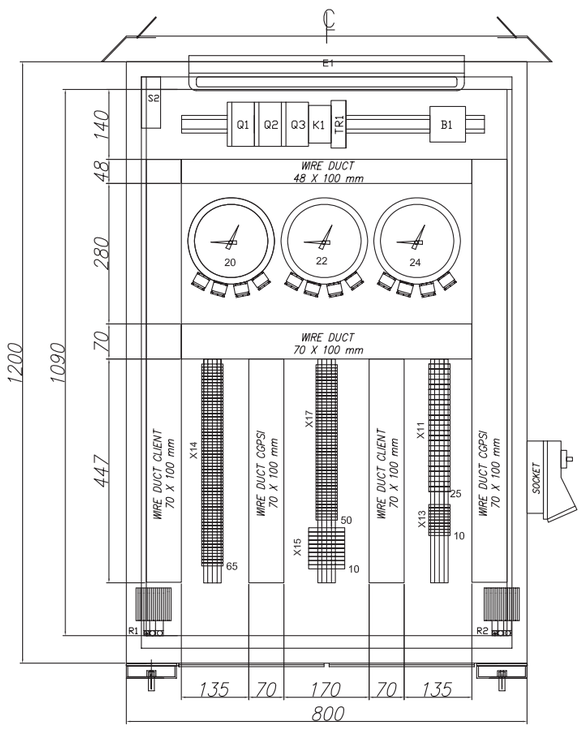

CONTROL CABINET
FRONT VIEW WITHOUT DOORS

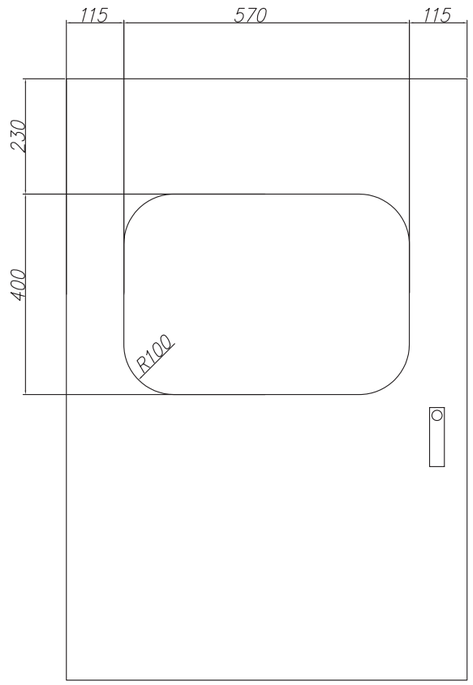

DOOR FRONT VIEW

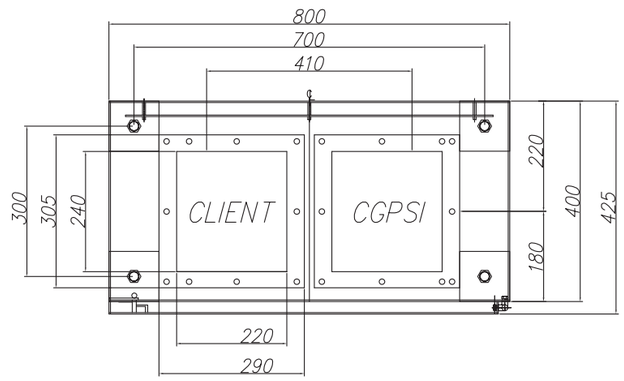

CONTROL CUBICLE
BOTTOM VIEW

R	NAME	DATE	DESCRIPTION
3	BGS	22.03.11	AS BUILT
2	BGS	13.12.10	AS per DRM date 8-10.12.2010
1	BGS	01.02.11	AS per PLN Comment date 28.01.2011

OUR DRAWINGS MAY NOT BE REPRODUCED WITHOUT OUR PERMISSION

FORM PPT-04-054

	NAME	DATE
DRAWN	BGS	24/11/2010
CHECK	IDT	24/11/2010
APPROVED	HSM	24/11/2010

REFERENCE: E0615
36/60 MVA
150/20 kV – 50 Hz

CUSTOMER: PT. PLN (PERSERO)
INDONESIA

PAUWELS TRAFO

TITLE: SCHEMATIC
PANEL LAYOUT

DRAWING No.: 490/E0615/A

REV: 3

SHT 9 OF 9