LD-Note Intel Calpella Platform with UMA GFX

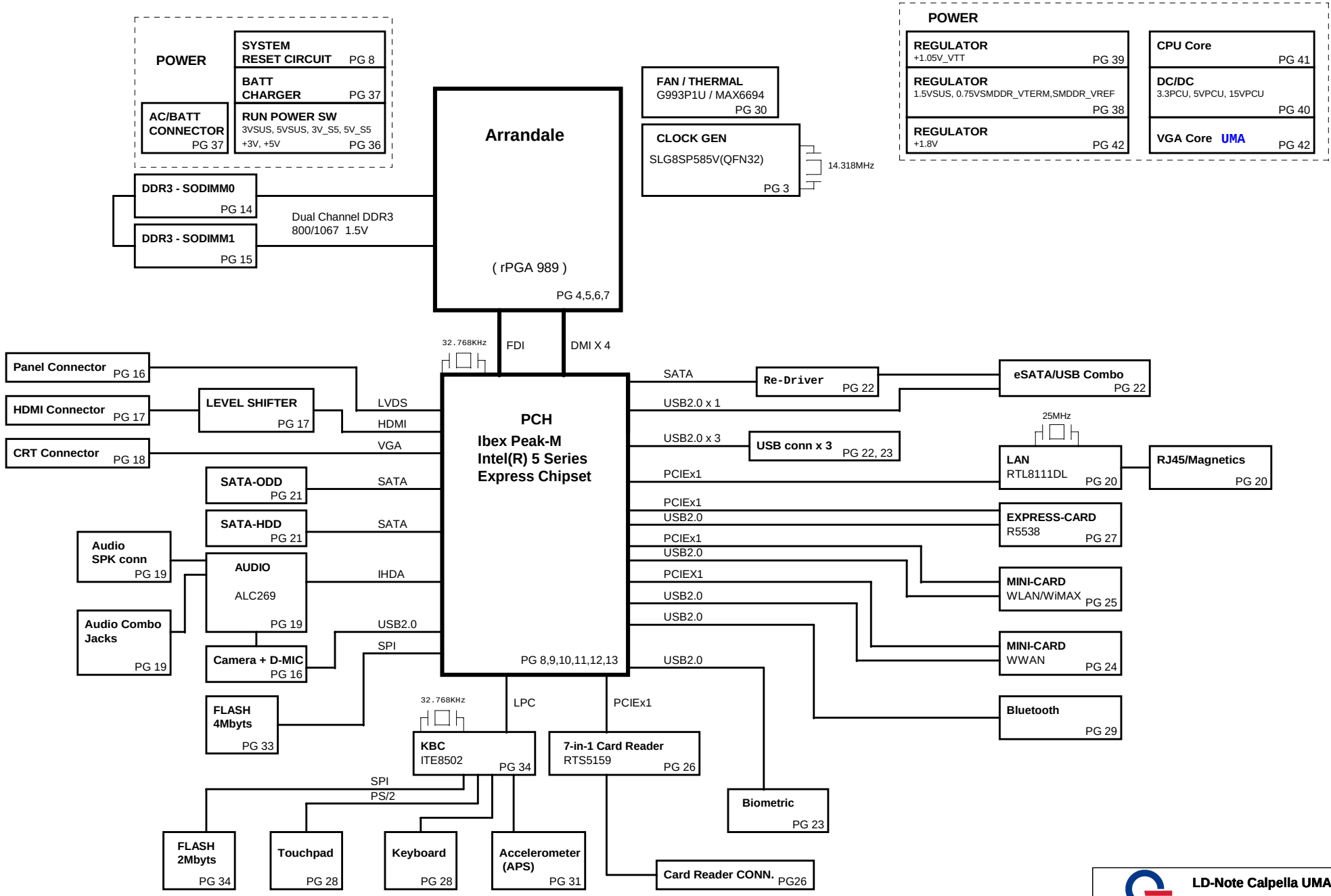

LD-Note Calpella UMA
Quanta Computer Inc.

Size	Document Number	Rev
Custom	<Doc>	<RevCode>
Date: Saturday, November 07, 2009	Sheet 1 of 50	

Block Diagram

Table of Contents

PAGE	DESCRIPTION
01	BLOCK DIAGRAM
02	FRONT PAGE
03	CLOCK GENERATOR
04-07	Auburndale PROCESSER
08-13	Ibex Peak-M
14-15	DDRIII SO-DIMM
16	LCD & LID CON
17	HDMI PORT(PS8101)
18	CRT CONN
19	AUDIO CODEC(ALC269Q)
20	LAN(8111DL)
21	SATA HDD/CD-ROM
22	USB X2/SIM_CARD/LEDs/RF
23	CARD READER/USB/SIM CONN
24	MINI-Card (WWAN)
25	MINI-Card (WLAN)
26	ONFI
27	Express Card
28	K/B, T/P
29	BlueTooth
30	FAN /THERMAL
31	G-SENSOR
32	B TO B CON
33	TPM & RFID EEPROM
34	KBC IT8502E
35	HOLD & SKEW
36	Discharge
37	Charger (ISL88731)
38	DDR3/0.75V(TPS51116REGR)
39	1.05V_VTT (RT8204)
40	3V/5V (ISL6237IRZ-T)
41	CPU (ISL62882)
42	GFX_VCC (MAX17028)
43	XDP & JTAG
44	Power Block Dianram
45	Schematic Value Descript
46	BOM Matrix Table

Power States

POWER PLANE	VOLTAGE	PAGE	DESCRIPTION	CONTROL SIGNAL	ACTIVE IN
VIN	10V~+20V	16,36,37,38,39,40,41,42	MAIN POWER		S0~S5
+3VRTC	+3.0V~+3.3V	9,12,34	RTC		S0~S5
3VPCU	+3.3V	9,16,20,23,28,32,34,36,37,40,42	ITE8502 POWER	3V5V_EN	S0~S5
5VPCU	+5V	36,37,38,39,40,42	DC/DC POWER IC SOURCE	3V5V_EN	S0~S5
+15V	+15V	16,31,36,38,39,40	LARGE POWER	3V5V_EN	S0~S5
LANVCC	+3.3V	20,36	LAN POWER	LAN_ON	
5V_S5	+5V	12,22,23,36	PCH SUS POWER	S5_ON	S0~S3
3V_S5	+3.3V	8,9,10,11,12,36	Sys Management,PCH Resume Well, Intel HD Audio,USB,WLAN,WiMAX POWER	S5_ON	S0~S3
5VSUS	+5V	16,32,36,41,42	SLP_S4# CTRLD POWER	SUSON	S0~S3
3VSUS	+3.3V	8,23,27,34,36,42	SLP_S4# CTRLD POWER	SUSON	S0~S3
1.5VSUS	+1.5V	4,6,12,14,15,36,38,39	DDR3 SODIMM POWER	SUSON	S0~S3
0.75VSMDDR_VTERM	+0.75V	14,15,36,38	DDR3 SODIMM REFERENCE POWER	MAINON	S0
+5V	+5V	8,12,16,17,18,19,21,28,30,34,36,37	SLP_S3# CTRLD POWER	MAINON	S0
+3V	+3.3V	3,4,8,9,10,11,12,14,15,16,17,18,19,20,21,22 23,24,25,26,27,29,30,31,32,33,34,36,37,38, 39,40,41,42,43	SLP_S3# CTRLD POWER	MAINON	S0
+1.8V	+1.8V	6,12,26,36,42	LVDS,NVM POWER	MAINON	S0
+1.5V	+1.5V	12,24,25,27,38,39	Mini PCIe,Express Card POWER	MAIND	S0
+1.05V_VTT	+1.05V	3,4,6,8,10,11,12,36,39,41,43	AuBurndale VTT POWER/PCH CORE POWER	MAINON	S0
+VCC_GFX_CORE		6,36,42	VGA CORE POWER	GFXVR_EN	S0
VCC_CORE		6,36,41	CPU CORE POWER	VRON	S0
LCDVCC	+3.3V	16	LCD Power	ENVDD	S0
+5V_ODD	+5V	21	ODD Power	MAINON#	S0
+5V_HDD	+5V	21	HDD Power	MAINON#	S0
BAT-V	+10V~+17V	37	MAIN BATTERY	CHG_PBATT	S0~S5

LD-Note Calpella UMA
Quanta Computer Inc.

Size	Document Number	Rev
Custom	Index & Power Status	

Date: Saturday, November 07, 2009 Sheet 2 of 50

4,8,9,10,11,12,14,15,16,17,18,19,20,21,22,23,24,25,27,29,30,31,33,34,36,38,39,40,41,43 +3V
4,6,8,9,10,11,12,35,36,39,41,42,43 +1.05V_VTT

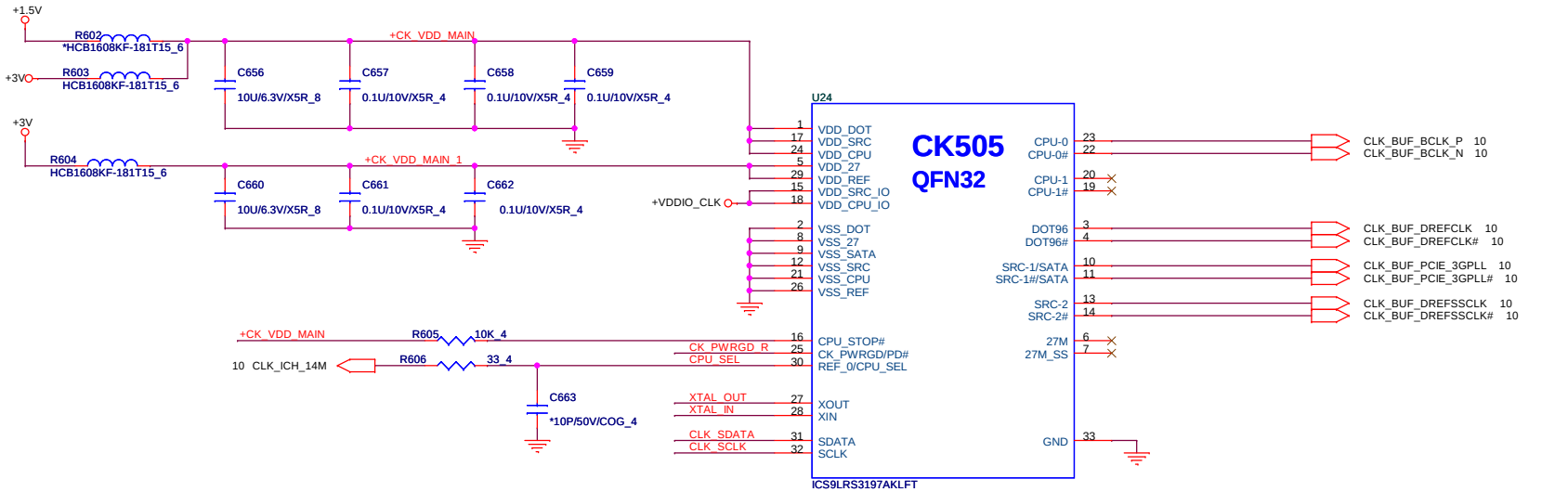

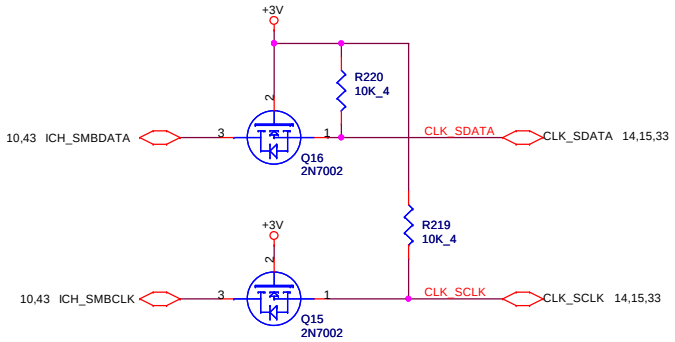

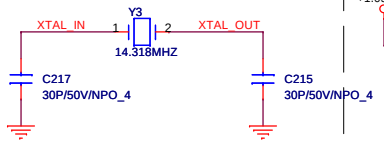

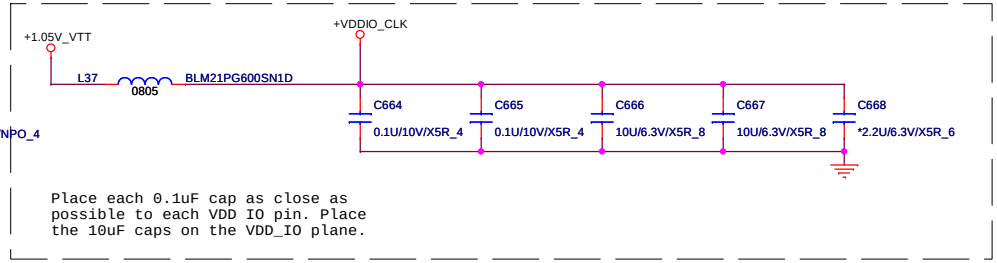

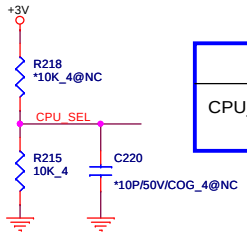

	0	1
CPU_SEL	CPU0/1=133MHz (default)	CPU0/1=100MHz

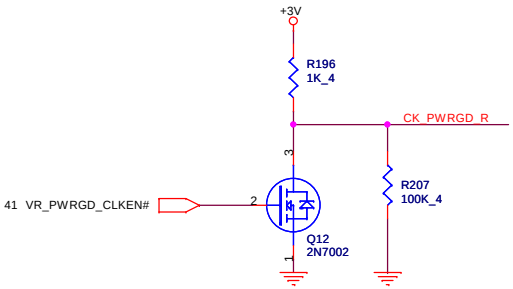

LD-Note Calpella UMA
Quanta Computer Inc.

Size	Document Number	Rev
Custom	Clock Generator	
Date: Saturday, November 07, 2009	Sheet 3 of 50	

AUBURNDALE PROCESSOR (DMI,PEG,FDI)

AUBURNDALE PROCESSOR (CLK,MISC,JTAG)

04

3,8,9,10,11,12,14,15,16,17,18,19,20,21,22,23,24,25,27,29,30,31,33,34,36,38,39,40,41,43 +3V
3,6,8,9,10,11,12,35,36,39,41,42,43 +1.05V_VTT
14,15,36,38 1.5VSUS

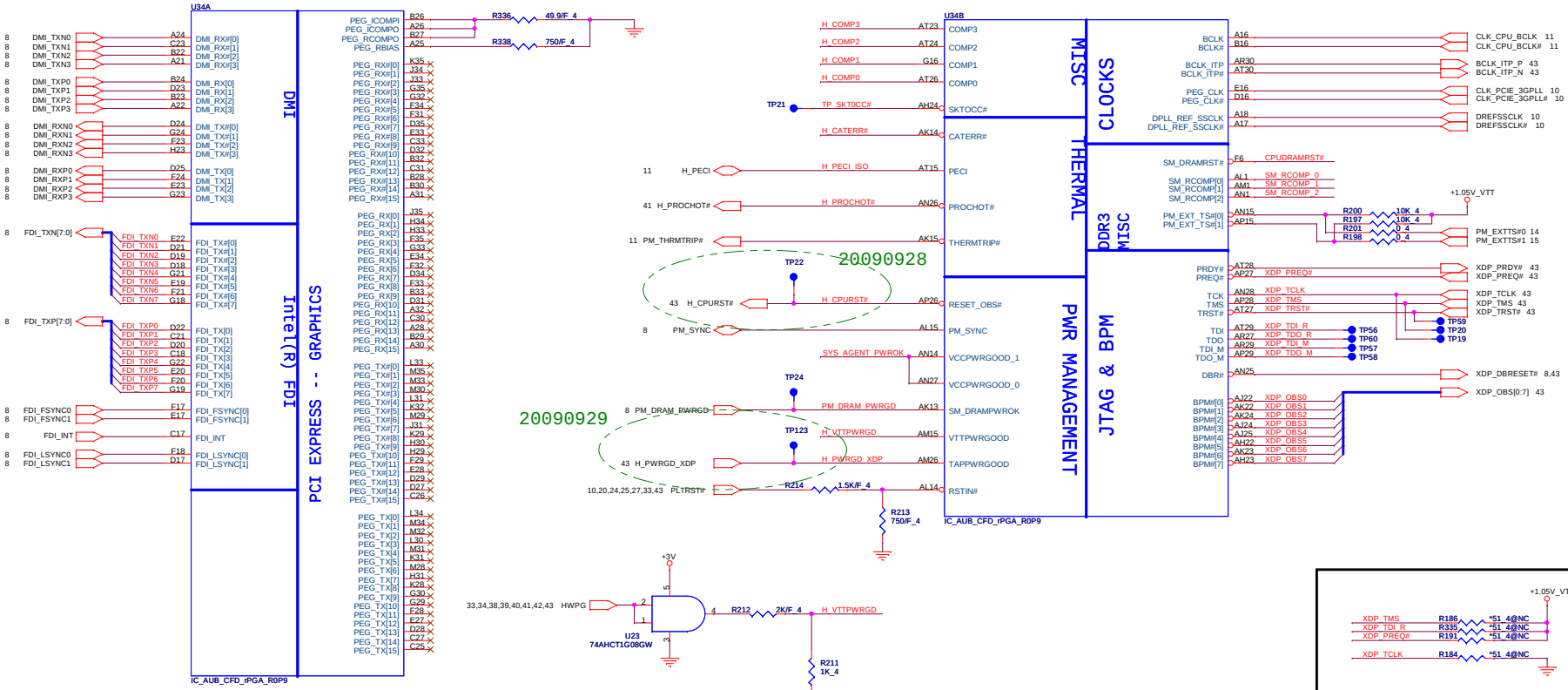

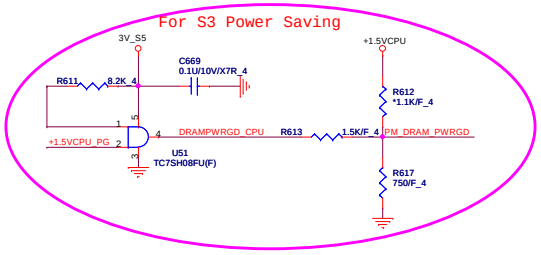

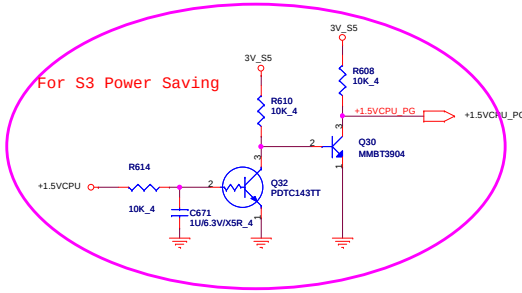

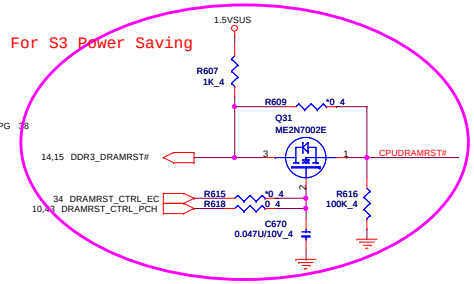

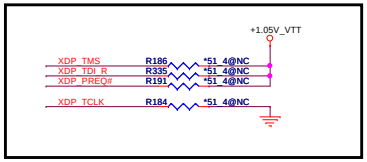

JTAG MAPPING

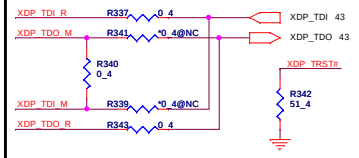

Scan Chain (Default)	STUFF -> R337, R340, R343 NO STUFF -> R341, R339
CPU Only	STUFF -> R337, R341 NO STUFF -> R340, R339, R343
GMCH Only	STUFF -> R339, R343 NO STUFF -> R337, R341, R340

Processor Pullups

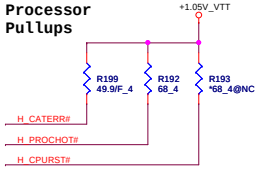

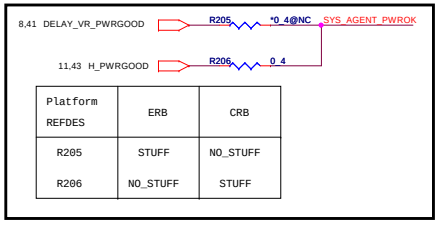

Platform REFDES	ERB	CRB
R205	STUFF	NO_STUFF
R206	NO_STUFF	STUFF

Processor Compensation Signals

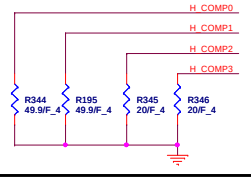

DDR3 Compensation Signals

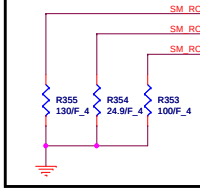

Layout Note: Place these resistors near Processor

LD-Note Calpella UMA
Quanta Computer Inc.

Size	Document Number	Rev
Custom	AUBURNDA 1/4	

Date: Saturday, November 07, 2009 Sheet 4 of 50

AUBURNDALE PROCESSOR (DDR3)

05

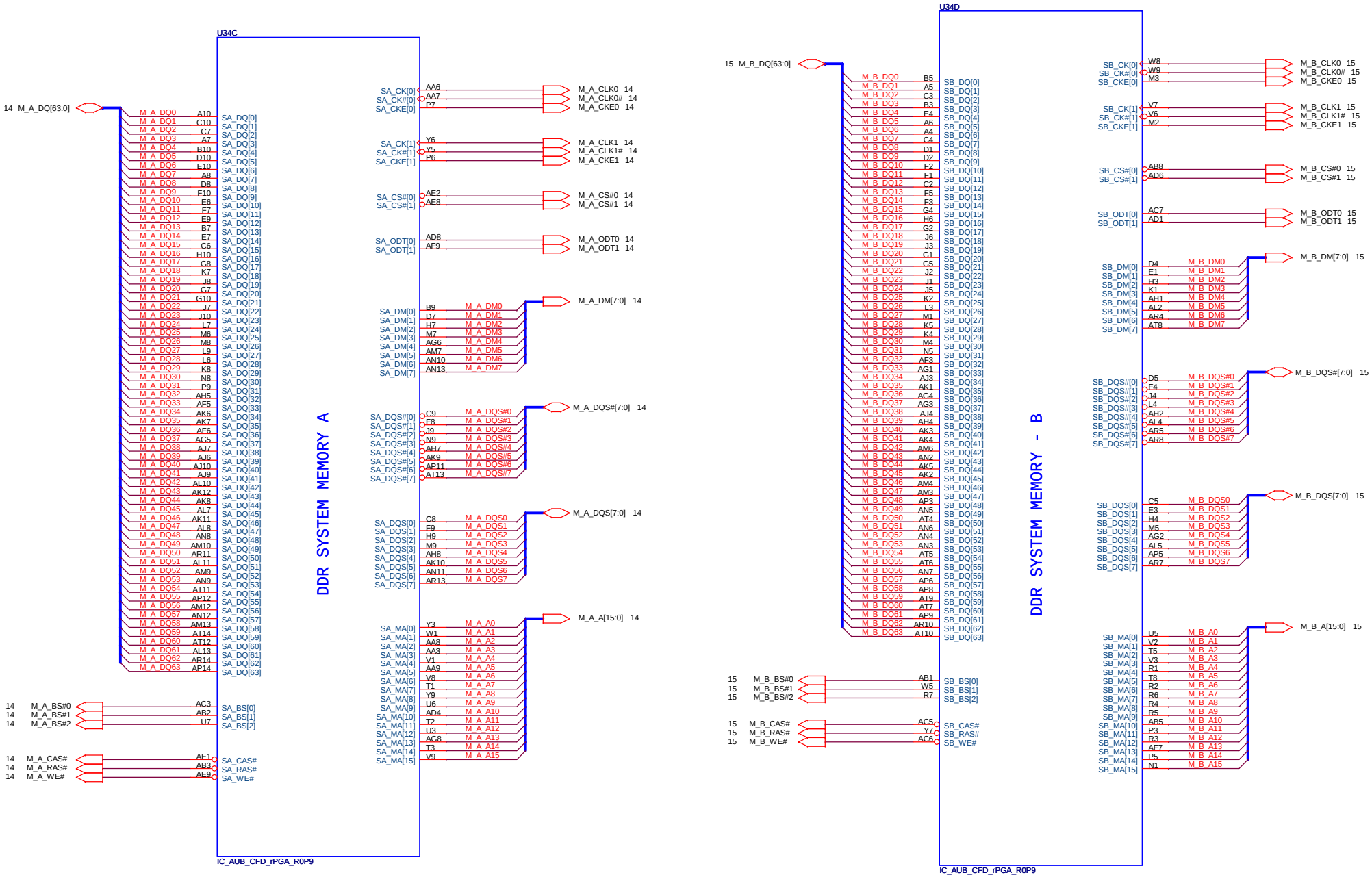

LD-Note Calpella UMA
Quanta Computer Inc.

Size	Document Number	Rev
Custom	AUBURNDA 2/4	

Date: Saturday, November 07, 2009 Sheet 5 of 50

CPU Core Power

AUBURNDALE PROCESSOR (GRAPHICS POWER)

AUBURNDALE PROCESSOR (POWER)

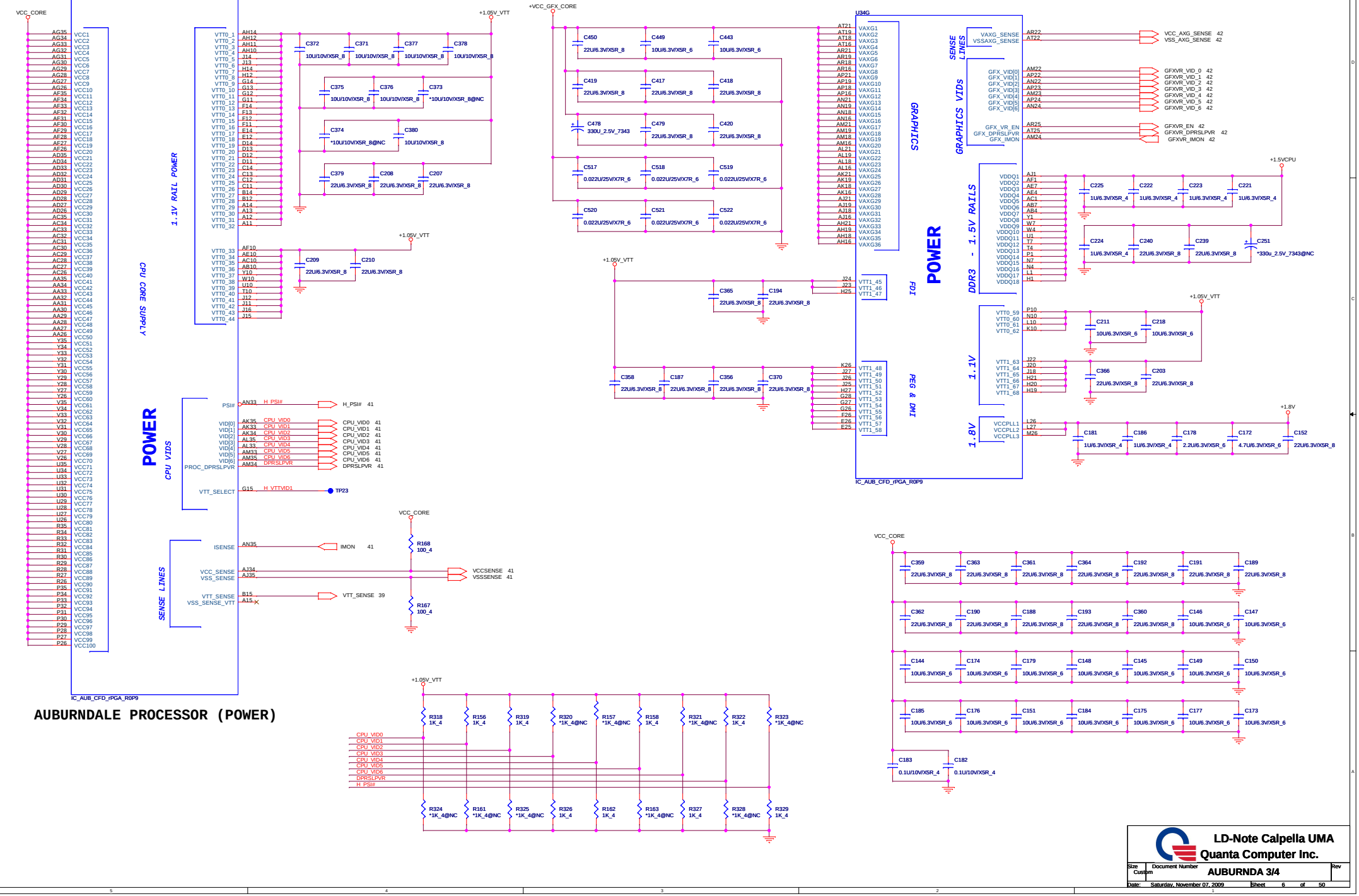

LD-Note Calpella UMA
Quanta Computer Inc.
Size: Custom | Document Number: AUBURNDA 3/4 | Rev
Date: Saturday, November 07, 2009 | Sheet 6 of 50

AUBURNDALE PROCESSOR (GND)

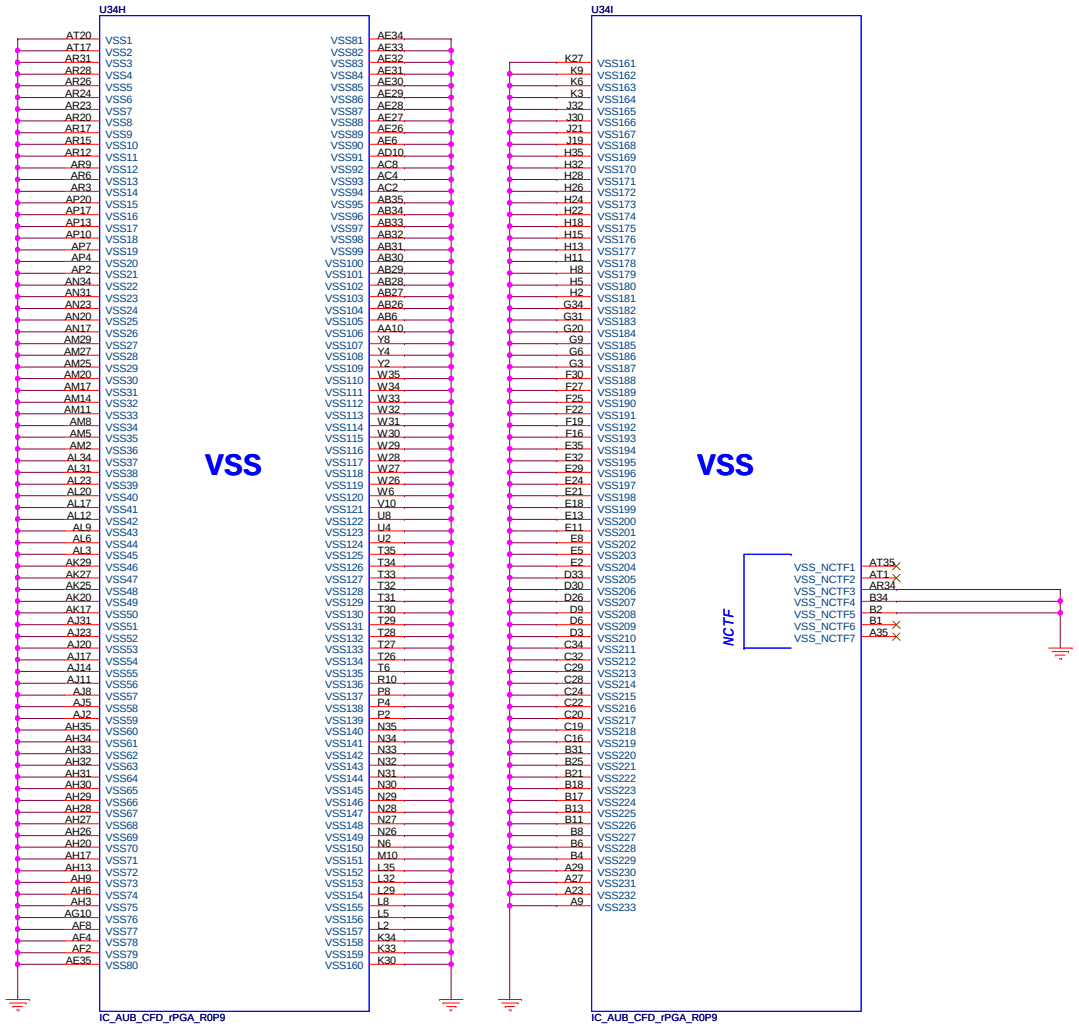

AUBURNDALE PROCESSOR(RESERVED, CFG)

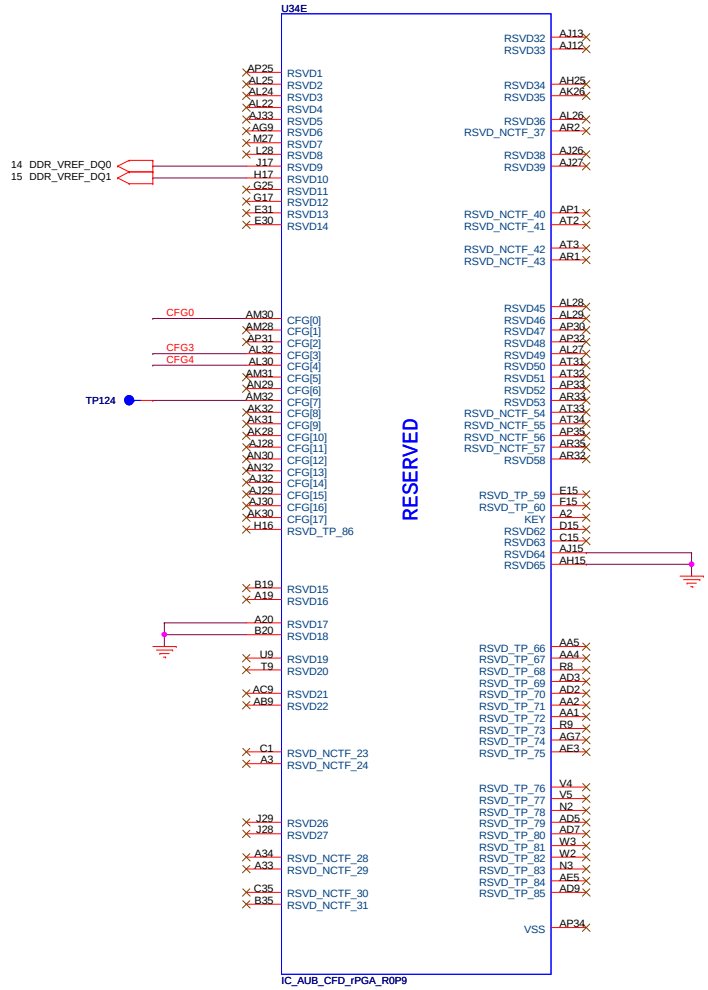

	1	0
CFG4 (Display Port Presence)	Disabled; No Physical Display Port attached to Embedded Diplay Port	Enabled; An external Display port device is connected to the Embedded Display port
CFG0 (PCI-Epress Configuration Select)	Single PEG	Bifurcation enabled
CFG3 (PCI-Epress Static Lane Reversal)	Normal Operation	Lane Numbers Reversed

LD-Note Calpella UMA
Quanta Computer Inc.

Size	Document Number	Rev
Custom	AUBURNDA 4/4 (GND)	

Date: Saturday, November 07, 2009 Sheet 7 of 50

3,4,6,9,10,11,12,35,36,39,41,42,43 +1.05V_VTT
4,9,10,11,12,22,25,36,43 3V_S5
3,4,9,10,11,12,14,15,16,17,18,19,20,21,22,23,24,25,27,29,30,31,33,34,36,38,39,40,41,43 +3V
12,17,18,19,21,28,30,32,34,36 +5V

IBEX PEAK-M (DMI,FDI,GPIO)

EC-C-19

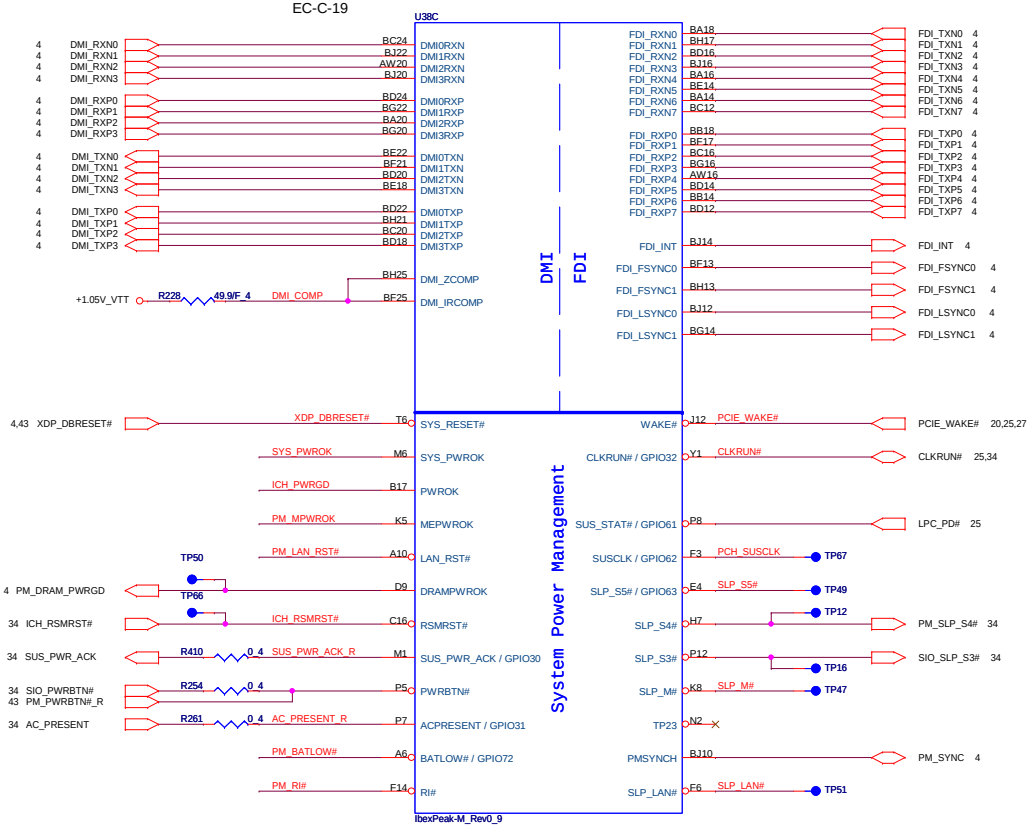

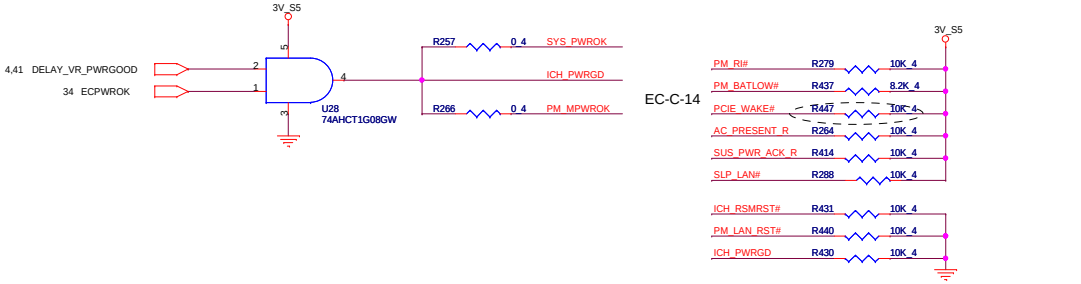

IBEX PEAK-M (LVDS,DDI)

EC-C-19

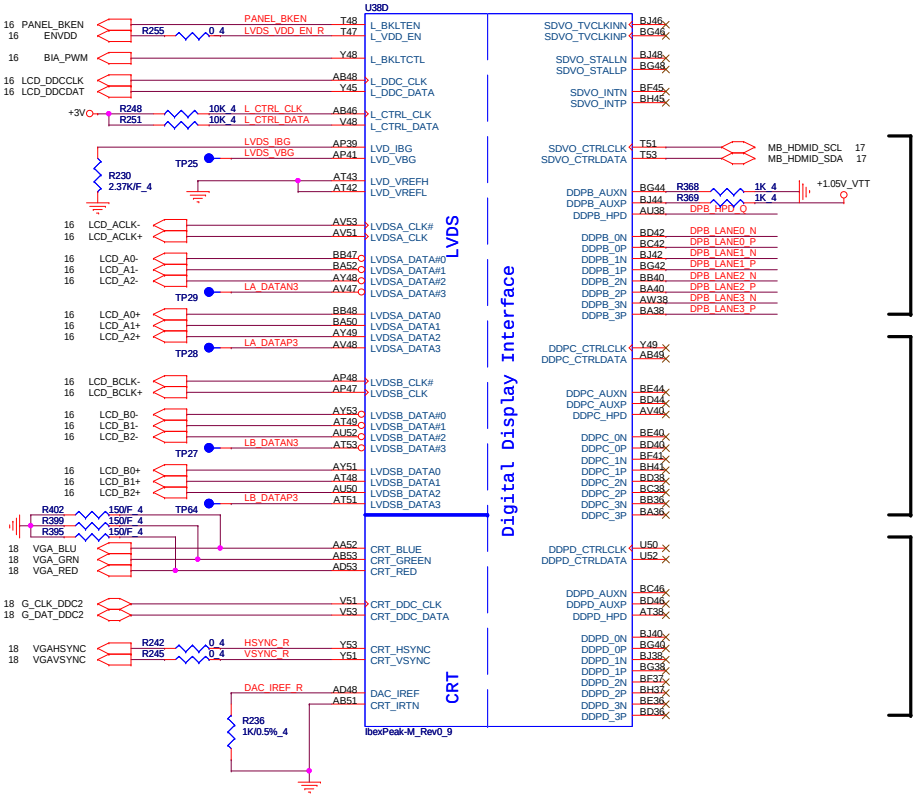

For UMA HDMI Function

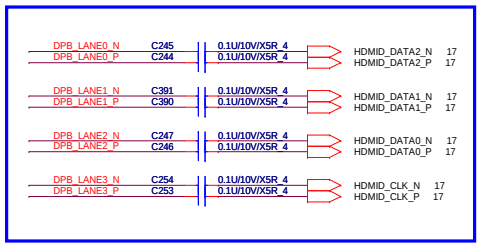

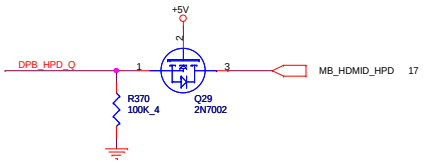

LD-Note Calpella UMA
Quanta Computer Inc.

Size	Document Number	Rev
Custom	IBEX PEAK-M 1/6	

Date: Saturday, November 07, 2009 Sheet 8 of 50

12,34 +3VRTC
16,20,28,32,34,36,37,40,42 3VPCU
3,4,8,10,11,12,14,15,16,17,18,19,20,21,22,23,24,25,27,29,30,31,33,34,36,38,39,40,41,43 +3V
4,8,10,11,12,22,25,36,43 3V_S5
3,4,6,8,10,11,12,35,36,39,41,42,43 +1.05V_VTT

RTC Circuitry

CMOS Settings	J5
Clear CMOS	1-2
Save CMOS	1-X (Default)

TPM Settings	J4
Clear ME RTC registers	1-2
Save ME RTC registers	1-X (Default)

+3VRTC
3VPCU
D14 CH501H-40HPT
C429 1U/6.3V/X5R_4
D15 CH501H-40HPT
+3VRTC_2
R445 20K/F_4
R446 20K/F_4
C441 1U/6.3V/X5R_4
J3 *SHORT_ PAD1
C440 1U/6.3V/X5R_4
J2 *SHORT_PAD1
R169 1K/F_4
R432 1M/F_4
+3VRTC_1
BT1
RTC BATTERY
C452 15P/50V/NPO_4
C451 15P/50V/NPO_4
Y4 32.768KHZ
R459 10M_4
Cap values depend on Xtal

IBEX PEAK-M (HDA,JTAG,SATA)

EC-C-19

U38A

RTC_X1 B13 RTCX1
RTC_X2 D13 RTCX2
RTC_RST# C14 RTCRST#
SRTC_RST# D17 SRTCRST#
SM_INTRUDER# A16 INTRUDER#
+3VRTC R433 330K_4 PCH_INVRMEN A14 INTVRMEN

INTVRMEN - Integrated SUS 1.1V VRM Enable
High - Enable Internal VRs

RTC

FWH0 / LAD0 D33
FWH1 / LAD1 B33
FWH2 / LAD2 C32
FWH3 / LAD3 A32
FWH4 / LFRAME# C34
LDRQ0# A34
LDRQ1# / GPIO23 E34
SERIRQ AB9

LPC_LAD0 25,34
LPC_LAD1 25,34
LPC_LAD2 25,34
LPC_LAD3 25,34
LPC_LFRAME# 25,34
LPC_DRQ#0 25
LCD_BK_OFF 16
IRQ_SERIRQ 25,34

LPC_DRQ#0
LCD_BK_OFF
R275 10K_4 +3V

LPC

ACZ_BIT_CLK A30 HDA_BCLK
ACZ_SYNC D29 HDA_SYNC
19 SPKR P1 SPKR
ACZ_RST# C30 HDA_RST#
19 ICH_AZ_CODEC_SDIN0 G30 HDA_SDIN0
TP43 F30 HDA_SDIN1
TP46 E32 HDA_SDIN2
TP48 F32 HDA_SDIN3
ACZ_SDOUT B29 HDA_SDO
R272 1K_4
+3V R291 *1K_4@NC HDA_DOCK_EN# H32 HDA_DOCK_EN# / GPIO33
3V_S5 R259 *10K_4@NC HDA_DOCK_RST# J30 HDA_DOCK_RST# / GPIO13

IHDA

SATA0RXN AK7
SATA0RXP AK6
SATA0TXN AK11 SATA_TXN0_C C270 0.01U/16V/X7R_4
SATA0TXP AK9 SATA_TXP0_C C267 0.01U/16V/X7R_4

SATA_RX0- 21
SATA_RX0+ 21
SATA_TX0- 21
SATA_TX0+ 21

SATA HDD

SATA1RXN AH6
SATA1RXP AH5
SATA1TXN AH9 SATA_TXN1_C C271 0.01U/16V/X7R_4
SATA1TXP AH8 SATA_TXP1_C C276 0.01U/16V/X7R_4

SATA_RX1- 21
SATA_RX1+ 21
SATA_TX1- 21
SATA_TX1+ 21

SATA ODD

SATA2RXN AF11
SATA2RXP AF9
SATA2TXN AF7
SATA2TXP AF6

SATA3RXN AH3
SATA3RXP AH1
SATA3TXN AF3
SATA3TXP AF1

Distance between the PCH and cap on the "P" signal should be identical distace between the PCH and cap on the "N" signal for the same pair.

SATA4RXN AD9
SATA4RXP AD8
SATA4TXN AD6 SATA_TXN4_C C296 0.01U/16V/X7R_4
SATA4TXP AD5 SATA_TXP4_C C292 0.01U/16V/X7R_4

SATA_RX4- 22
SATA_RX4+ 22
SATA_TX4- 22
SATA_TX4+ 22

E-SATA

SATA5RXN AD3
SATA5RXP AD1
SATA5TXN AB3
SATA5TXP AB1

SATAICOMPO AF16
SATAICOMPI AF15 SATA_COMP R237 37.4/F_4 +1.05V_VTT

SATA

43 PCH_JTAG_TCK_BUF M3 JTAG_TCK
43 PCH_JTAG_TMS K3 JTAG_TMS
43 PCH_JTAG_TDI K1 JTAG_TDI
43 PCH_JTAG_TDO J2 JTAG_TDO
43 PCH_JTAG_RST# J4 JTAG_RST#
TP65
TP68
TP54
TP52
TP53

JTAG

SATALED# T3
R404 10K_4 +3V
TP80

33 SPI_CLK_R BA2 SPI_CLK
33 SPI_CS0#_R AV3 SPI_CS0#
TP63 AY3 SPI_CS1#
33 SPI_SI_R AY1 SPI_MOSI
33 SPI_SO AV1 SPI_MISO

SATA0GP / GPIO21 Y9 SATA0GP
SATA1GP / GPIO19 V1 SATA1GP
R295 0_4

MODEL_ID1 11
SATA_DET0# 43
SATA_DET1# 43

SPI

ibexPeak-M_Rev0_9

19 ICH_AZ_CODEC_BITCLK R426 33_4 ACZ_BIT_CLK
C427 *10P/50V/COG_4@NC
19 ICH_AZ_CODEC_SYNC R428 33_4 ACZ_SYNC
19 ICH_AZ_CODEC_RST# R425 33_4 ACZ_RST#
19 ICH_AZ_CODEC_SDOUT R427 33_4 ACZ_SDOUT

Place all series terms close to PCH except for SDIN input lines,which should be close to source.Placement of R651, R652, R650 & R653 should equal distance to the T split trace point. Basically, keep the same distance from T for all series termination resistors.

No Reboot Strap

+3V
Place near connector
R408 *1K_4@NC SPKR
R268 10K_4 IRQ_SERIRQ

LD-Note Calpella UMA Quanta Computer Inc.		
Size: Custom	Document Number: IBEX PEAK-M 2/6	Rev
Date: Saturday, November 07, 2009	Sheet 9 of 50	

IBEX PEAK-M (PCI,USB,NVRAM)

IBEX PEAK-M (PCI-E,SMBUS,CLK)

Feature set	SKU Names			
	Q57	H57	H55	P55
PCIE 2.0 Ports	8	8	6 *1	8
USB 2.0 Ports	14	14	12 *2	14

*1: USB ports 6 and 7 are disabled

*2: PCIE ports 7 and 8 are disabled

EC-C-19

EC-C-20

EC-C-3

Place R723 near to PCH

Place R666 near to PCH

USB0
USB1
Express Card
Camera
Mini Card (WLAN)
Mini Card (WWAN)
USB3
USB2
FINGER PRINTER
CARD-READER
BLUETOOTH

MiniWLAN
Express Card
MiniWWAN
LAN

FOR EMI

Non-iAMT

Add Buffers as needed for Loading and fanout concerns.

20091014

No stuff XTAL25_IN and XTAL25_OUT circuitry until integrated CG becomes PCH POR.

Boot BIOS Strap

PCI_GNT0#	PCI_GNT#1	Boot BIOS Location
0	0	LPC
0	1	Reserved (NAND)
1	0	PCI
1	1	SPI

DMI Termination Voltage

NV_CLE	Set to Vcc when LOW Set to Vcc/2 when HIGH

Danbury Technology Enabled

NV_ALE	High = Enable Low = Disable

A16 swap override Strap/Top-Block Swap Override jumper

GNT3#	Low = A16 swap override/Top-Block Swap Override enabled High = Default

LD-Note Calpella UMA
Quanta Computer Inc.

Size	Document Number	Rev
Custom	IBEX PEAK-M 3/6	

Date: Saturday, November 07, 2009 Sheet 10 of 50

IBEX PEAK-M (GPIO,VSS_NCTF,RSVD)

EC-C-19

3,4,8,9,10,12,14,15,16,17,18,19,20,21,22,23,24,25,27,29,30,31,33,34,36,38,39,40,41,43 +3V
4,8,9,10,12,22,25,36,43 3V_S5
3,4,6,8,9,10,12,35,36,39,41,42,43 +1.05V_VTT

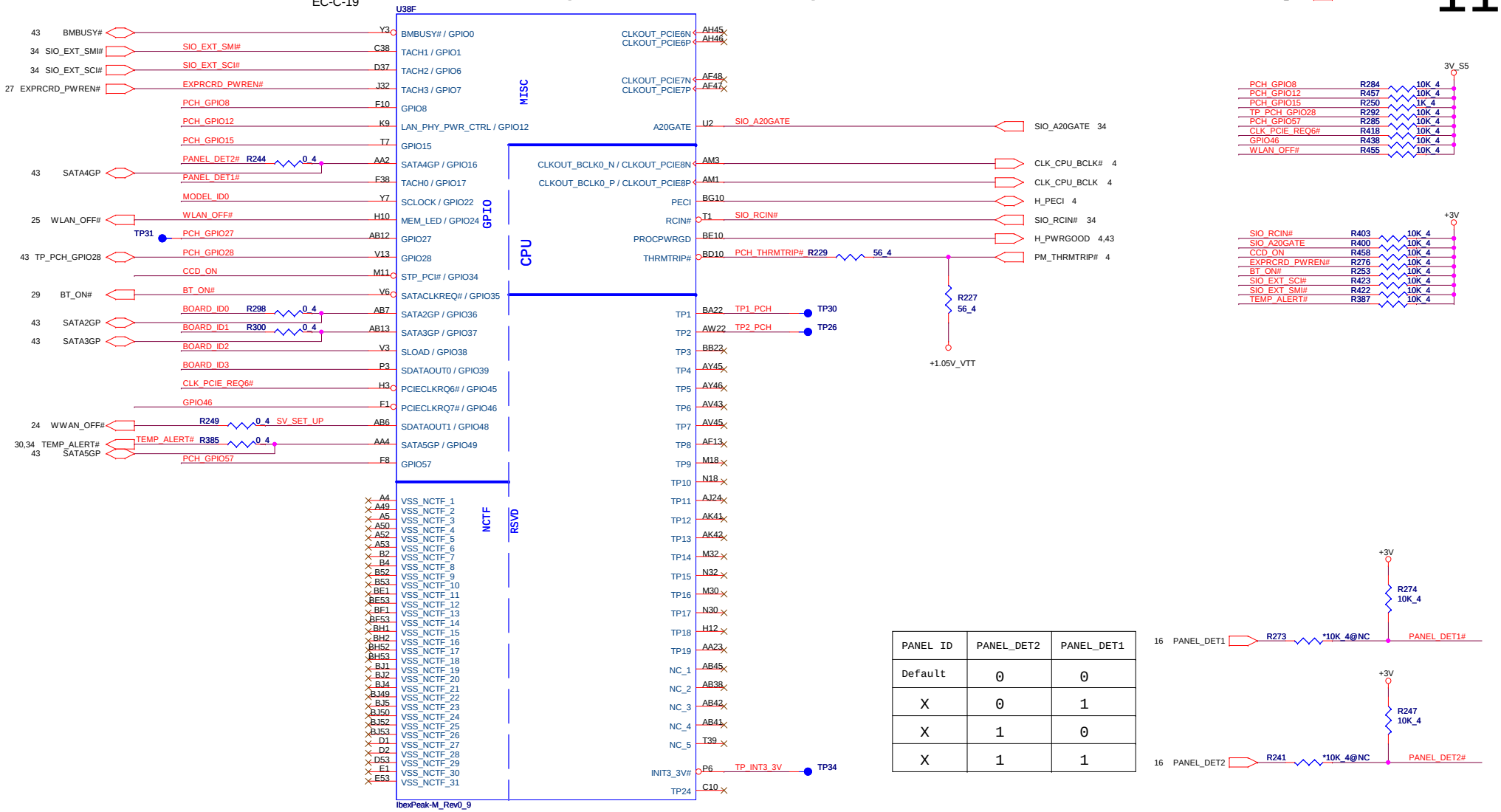

3V_S5

PCH_GPIO8	R284	10K_4
PCH_GPIO12	R457	10K_4
PCH_GPIO15	R250	1K_4
TP_PCH_GPIO28	R292	10K_4
PCH_GPIO57	R285	10K_4
CLK_PCIE_REQ6#	R418	10K_4
GPIO46	R438	10K_4
WLAN_OFF#	R455	10K_4

+3V

SIO_RCIN#	R403	10K_4
SIO_A20GATE	R400	10K_4
CCD_ON	R458	10K_4
EXPRCRD_PWREN#	R276	10K_4
BT_ON#	R253	10K_4
SIO_EXT_SCI#	R423	10K_4
SIO_EXT_SMI#	R422	10K_4
TEMP_ALERT#	R387	10K_4

PANEL ID	PANEL_DET2	PANEL_DET1
Default	0	0
X	0	1
X	1	0
X	1	1

+3V
R274 10K_4
16 PANEL_DET1 R273 *10K_4@NC PANEL_DET1#
+3V
R247 10K_4
16 PANEL_DET2 R241 *10K_4@NC PANEL_DET2#

Board ID For Function	ID3 GPIO39	ID2 GPIO38	ID1 GPIO37	ID0 GPIO36
SDV	0	0	0	0
SIV	0	0	0	1
SIT	0	0	1	0
SVT	0	0	1	1
SOVP	0	1	0	0

+3V
R296 10K_4 BOARD_ID0 R297 *10K_4
R301 *10K_4@NC BOARD_ID1 R299 10K_4
R394 *10K_4@NC BOARD_ID2 R393 10K_4
R407 *10K_4@NC BOARD_ID3 R406 10K_4

Model ID	MODEL_ID0	MODEL_ID1
13"	0	0
14"	0	1
15"	1	0
Default	1	1

+3V
R243 10K_4@GC6
MODEL_ID0 R239 10K_4@GC5
+3V
R293 10K_4@GC5
9 MODEL_ID1 R294 10K_4@GC6

+3V
SV_SET_UP R246 10K_4

SV_SET_UP	1-X High = Strong (Default)

LD-Note Calpella UMA
Quanta Computer Inc.

Size	Document Number	Rev
Custom	IBEX PEAK-M 4/6	
Date: Sunday, November 08, 2009	Sheet 11 of 50	

IBEX PEAK-M (POWER)

EC-C-19

VccCORE : 1432mA max

VccDAC : 69mA max

VccALVDS : <1mA max

VccTX_LVDS : 59mA max

VccIO : 3062mA max

VccVRM : 196mA max

VccDMI : 58mA max

VccPNAND : 156mA max

Vcc3_3 : 357mA max

VccME3_3 : 85mA max

VccADPLLA : 68mA max

VccADPLLB : 69mA max

VccME : 1849mA max

VccLAN : 320mA max

V_CPU_IO : <1mA max

VccRTC : 2mA max

VccSUS3_3 : 163mA max

V5REF_SUS : <1mA max

V5REF : <1mA max

VccSUSHDA : 6mA max

IbexPeak-M_Rev0_9

LD-Note Calpella UMA	
Quanta Computer Inc.	
Size: Custom	Document Number: IBEX PEAK-M 5/6
Rev:	
Date: Saturday, November 07, 2009	Sheet 12 of 50

IBEX PEAK-M (GND)

EC-C-19

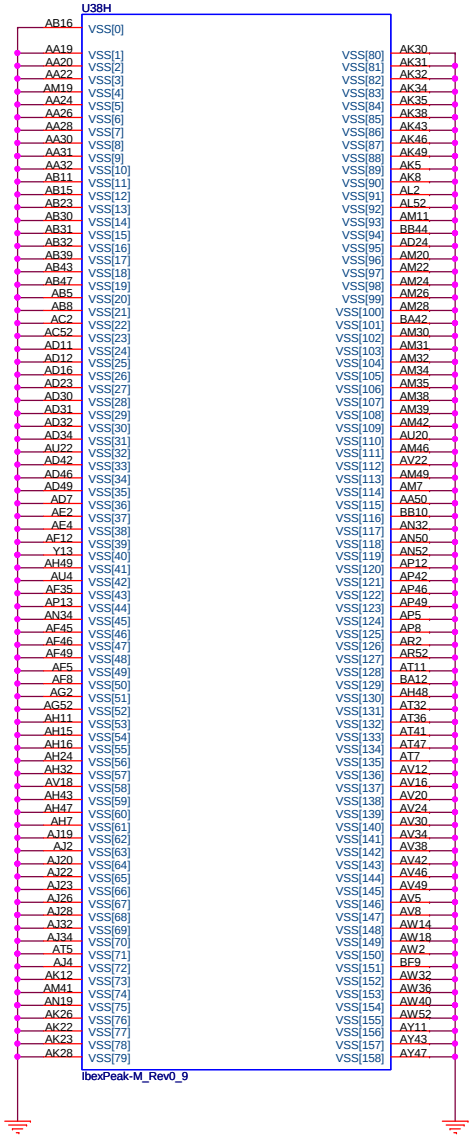

EC-C-19

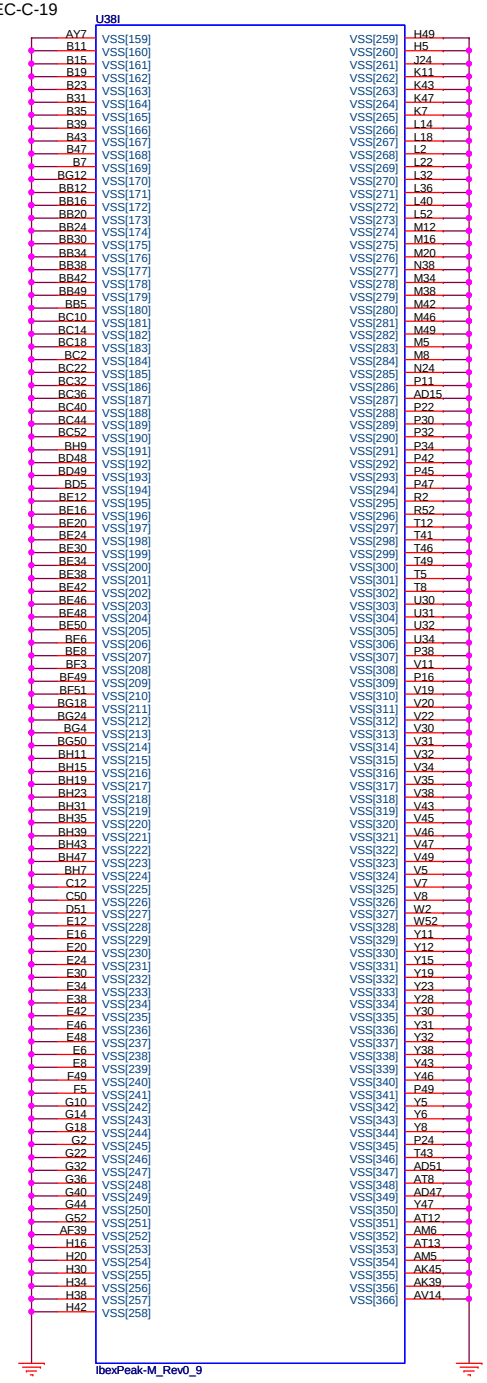

LD-Note Calpella UMA
Quanta Computer Inc.

Size	Document Number	Rev
Custom	IBEX PEAK-M 6/6	

Date: Saturday, November 07, 2009 Sheet 13 of 50

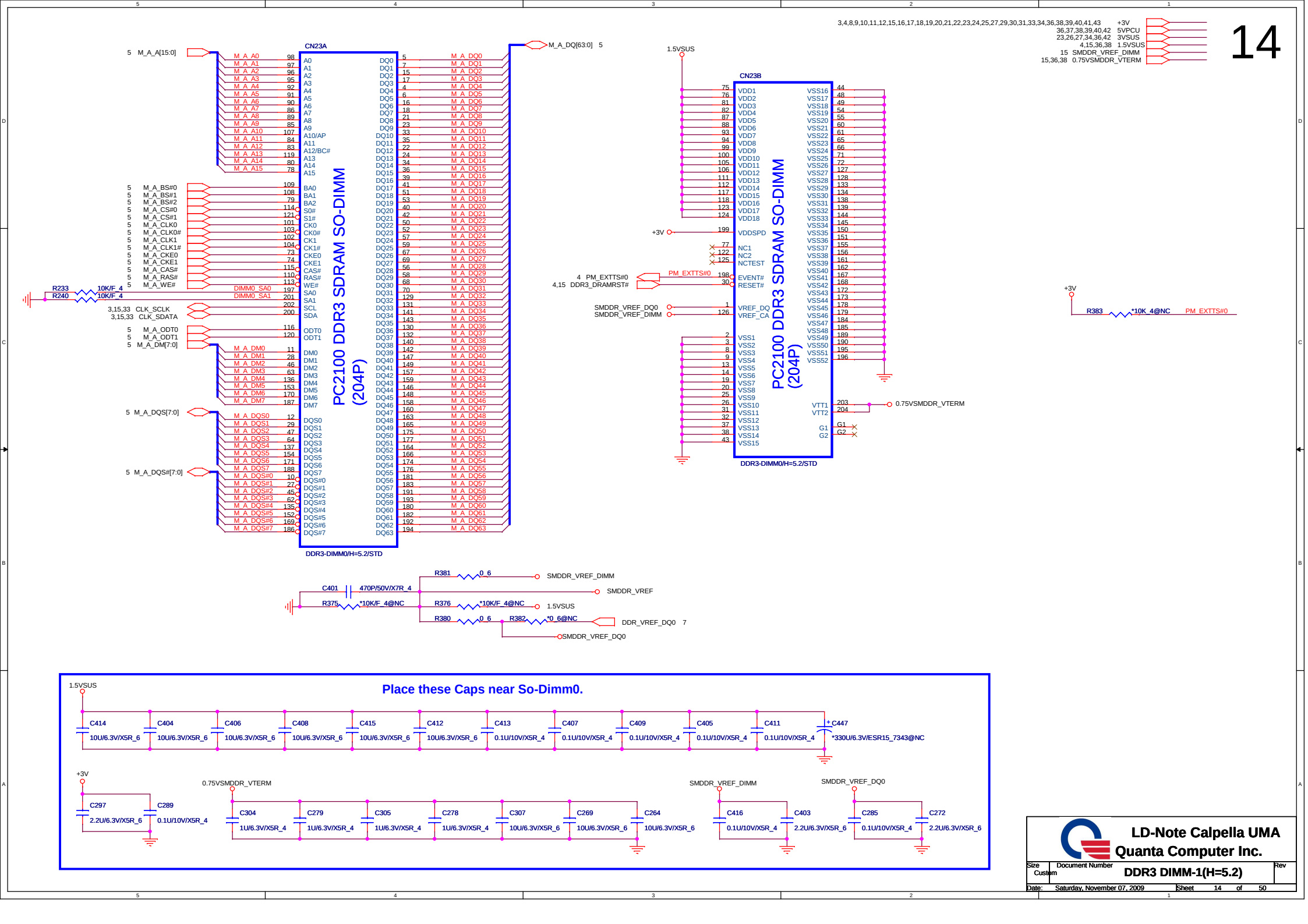

LD-Note Calpella UMA
Quanta Computer Inc.

Size	Document Number	Rev
Custom	DDR3 DIMM-1(H=5.2)	

Date: Saturday, November 07, 2009 Sheet 14 of 50

3,4,8,9,10,11,12,14,16,17,18,19,20,21,22,23,24,25,27,29,30,31,33,34,36,38,39,40,41,43 +3V
23,26,27,34,36,42 3VSUS
4,14,36,38 1.5VSUS
14 SMDDR_VREF_DIMM
14,36,38 0.75VSMDDR_VTERM

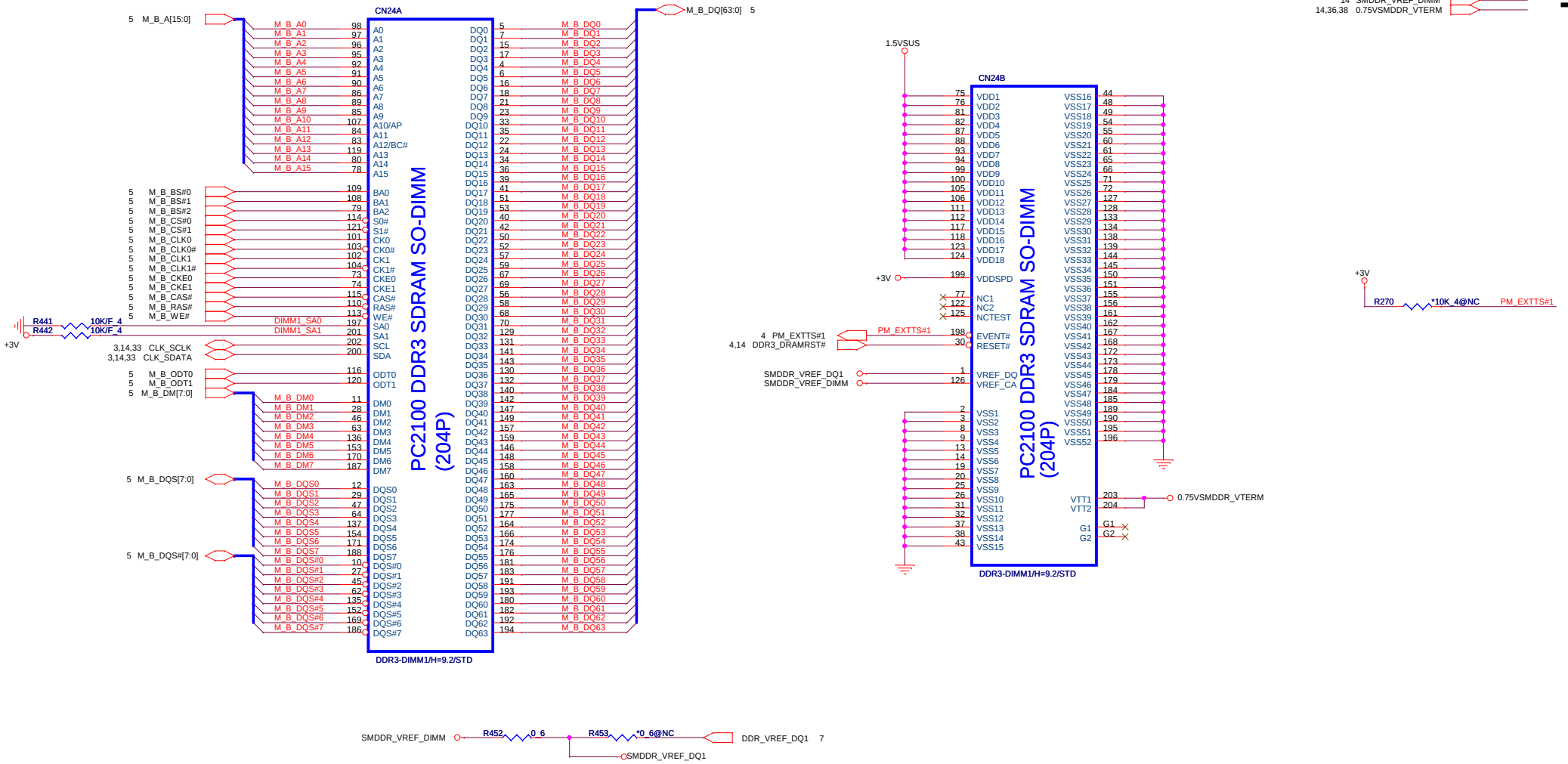

Place these Caps near So-Dimm1.

1.5VSUS

C437	C439	C431	C430	C410	C438	C433	C432	C434	C435	C436	+ C448
10U/6.3V/X5R_6	10U/6.3V/X5R_6	10U/6.3V/X5R_6	10U/6.3V/X5R_6	10U/6.3V/X5R_6	10U/6.3V/X5R_6	0.1U/10V/X5R_4	0.1U/10V/X5R_4	0.1U/10V/X5R_4	0.1U/10V/X5R_4	0.1U/10V/X5R_4	*330U/6.3V/ESR15_7343@NC

+3V

C334	C442
2.2U/6.3V/X5R_6	0.1U/10V/X5R_4

0.75VSMDDR_VTERM

C326	C335	C327	C330	C323	C331	C329
1U/6.3V/X5R_4	1U/6.3V/X5R_4	1U/6.3V/X5R_4	1U/6.3V/X5R_4	10U/6.3V/X5R_6	10U/6.3V/X5R_6	10U/6.3V/X5R_6

SMDDR_VREF_DIMM

C444	C445
0.1U/10V/X5R_4	2.2U/6.3V/X5R_6

SMDDR_VREF_DQ1

C332	C333
0.1U/10V/X5R_4	2.2U/6.3V/X5R_6

LD-Note Calpella UMA
Quanta Computer Inc.

Size	Document Number	Rev
Custom	DDR3 DIMM-1(H=9.2)	
Date: Saturday, November 07, 2009	Sheet 15 of 50	

LCDVCC

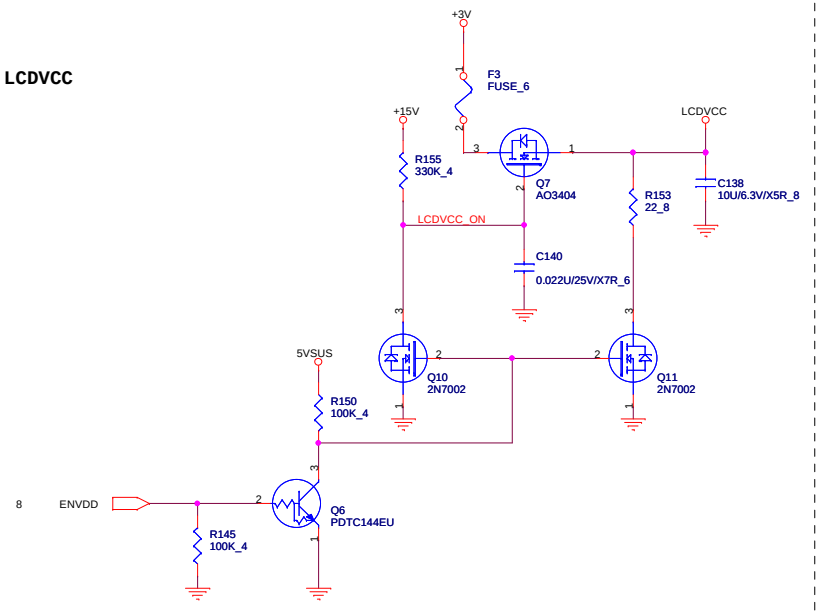

LCD_CON

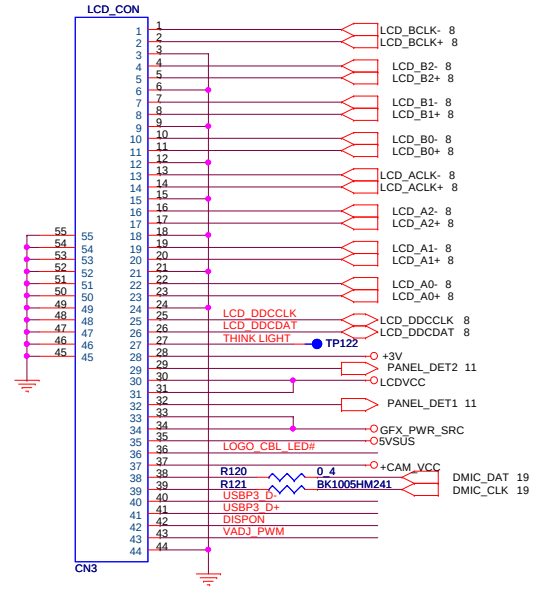

Adress : A9H --Contrast
AAH --Backlight

3,4,8,9,10,11,12,14,15,17,18,19,20,21,22,23,24,25,27,29,30,31,33,34,36,38,39,40,41,43 +3V
31,36,38,40 +15V
36,41,42 5VSUS
9,20,28,32,34,36,37,40,42 3VPCU
36,37,38,39,40,41,42 VIN
8,12,17,18,19,21,28,30,32,34,36 +5V

LCD_DDCCLK R154 4.7K_4
LCD_DDCDAT R151 4.7K_4 +3V

LOGO LED ON

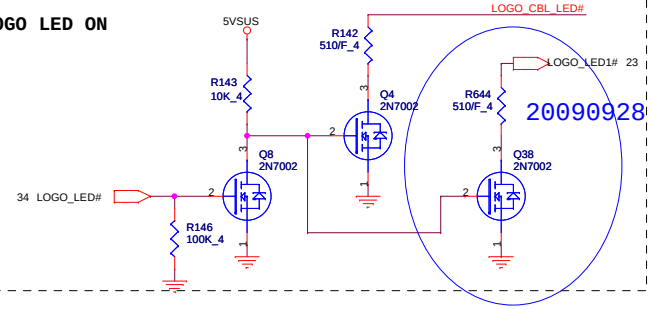

back light

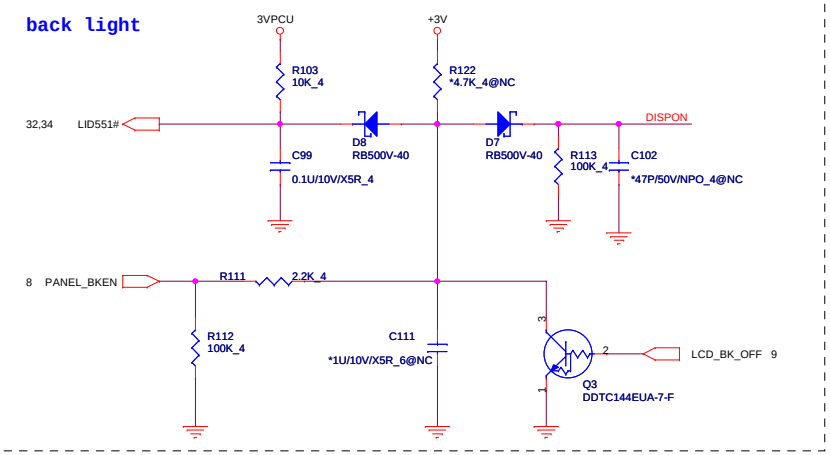

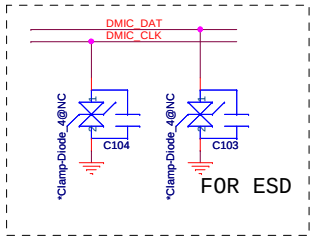

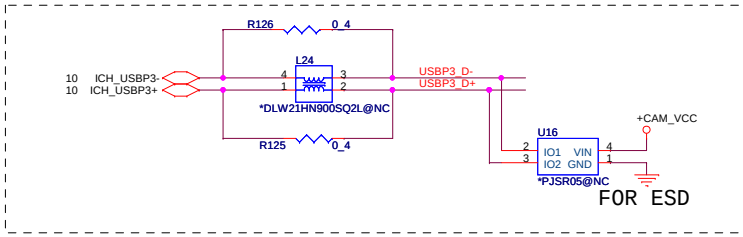

CAMERA VCC Control

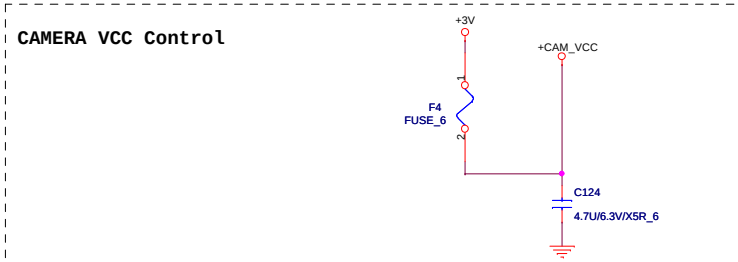

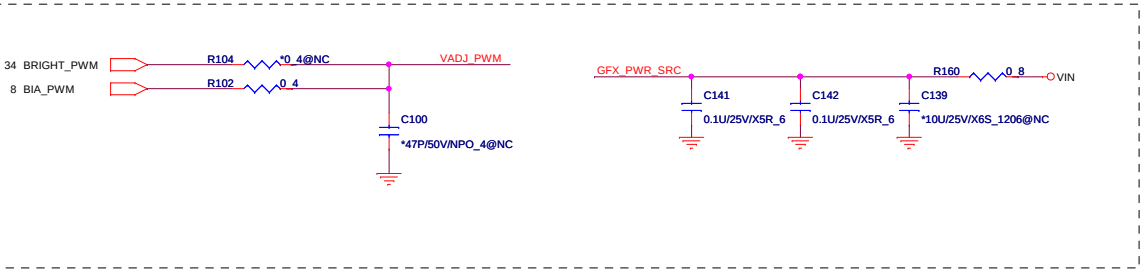

LD-Note Calpella UMA
Quanta Computer Inc.

Size	Document Number	Rev
Custom	LCD + CAMERA CONN	
Date: Saturday, November 07, 2009	Sheet 16 of 50	

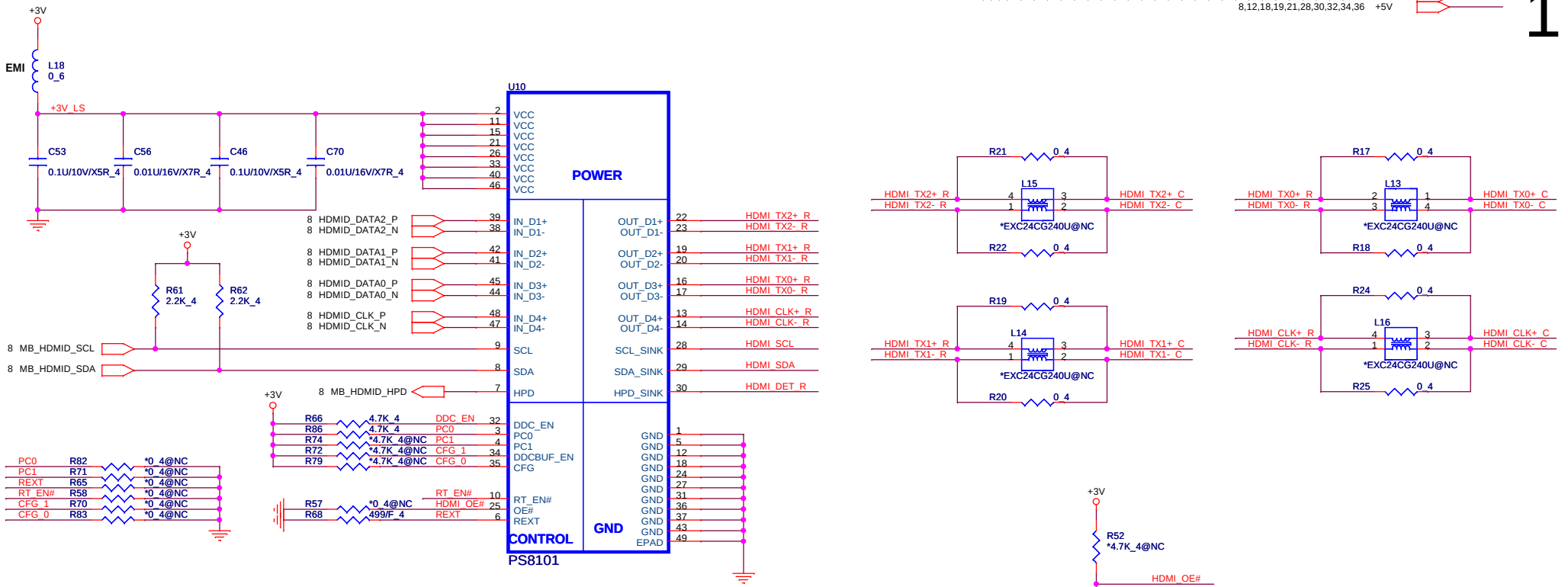

EQUALIZATION SETTING
PC1:PC0=0:0 8dB
PC1:PC0=0:1 4dB Recommanded
PC1:PC0=1:0 12dB
PC1:PC0=1:1 0dB

PS8101 Pin34/35 is NC

SCLZ/SDAZ Low-level input/output Voltage
CFG1:CFG0=0:0 VIL:<0.4V VOL:0.6V (Default)
CGF1:CGF0=0:1 VIL:<0.36V VOL:0.55V
CGF1:CGF0=1:0 VIL:<0.44V VOL:0.65V
CGF1:CGF0=1:1 VIL:<0.36V VOL:0.6V

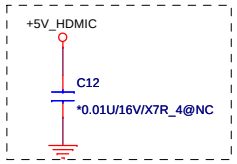

for EMI request

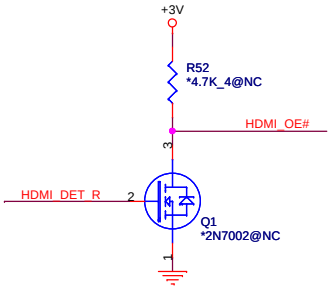

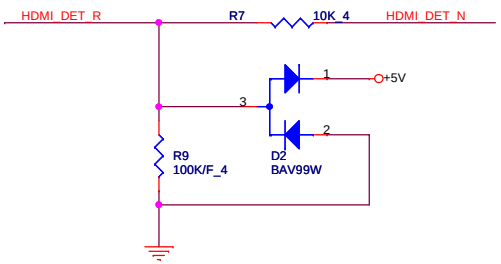

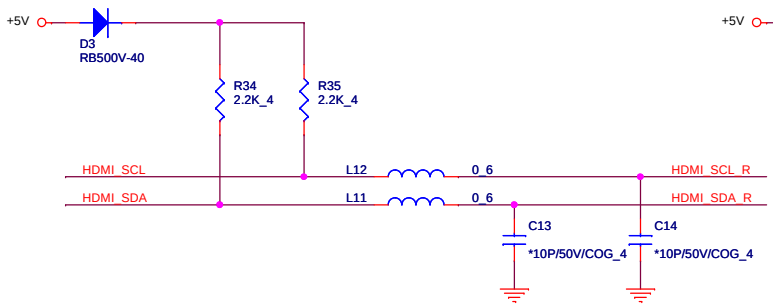

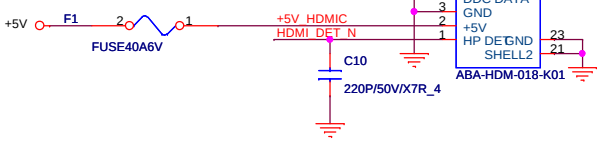

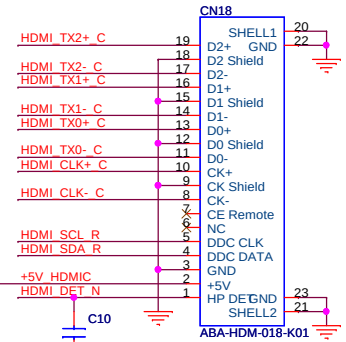

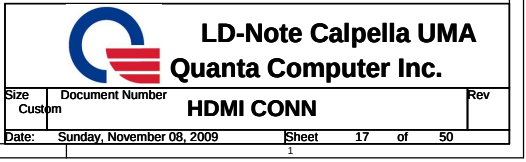

8,12,17,19,21,28,30,32,34,36 +5V
3,4,8,9,10,11,12,14,15,16,17,19,20,21,22,23,24,25,27,29,30,31,33,34,36,38,39,40,41,43 +3V

Layout Note:
Setting R,G,B trace impedance to 50 ohm.

CRT_VCC
D1 RB500V-40
EC-C-16
C9 0.1U/10V/X5R_4
+5V
F2 FUSE40A6V
CRT_VCC_R
C347 *VARISTOR_4@NC

8 VGA_RED — L5 BK1608LL680 — CRT_R1
8 VGA_GRN — L4 BK1608LL680 — CRT_G1
8 VGA_BLU — L3 BK1608LL680 — CRT_B1

R14 150/F_4
R13 150/F_4
R12 150/F_4
C17 5.6P/50V/COG_4
C16 5.6P/50V/COG_4
C15 5.6P/50V/COG_4
C1 5.6P/50V/COG_4
C2 5.6P/50V/COG_4
C3 5.6P/50V/COG_4
TP1

CRT_CONN
CN17
EC-C-8

ESD PROTECTION
D25 TVSS5VESPT — CRT_R1
D24 TVSS5VESPT — CRT_G1
D23 TVSS5VESPT — CRT_B1
D21 TVSS5VESPT — CRTVSYNC
D22 TVSS5VESPT — CRTHSYNC
D20 TVSS5VESPT — DDCCLK3
D26 TVSS5VESPT — DDCDAT3

+5V
8 VGAVSYNC — U31 AHCT1G125DCH — VGAVSYNC_R — R28 10_4 — CRTVSYNC1
8 VGAHSYNC — U32 AHCT1G125DCH — VGAHSYNC_R — R15 10_4 — CRTHSYNC1
C26 0.1U/10V/X5R_4

Place near
U5001,U5002 < 200 mil

C20 *10P/50V/COG_4
C25 *10P/50V/COG_4

L1 BLM18AG121SN1D — CRTVSYNC
L2 BLM18AG121SN1D — CRTHSYNC
C8 10P/50V/C0G_4
C7 10P/50V/C0G_4

Place near CN5002 connector
< 200 mil

+3V
CRT_VCC
R8 2.2K_4
R5 2.2K_4
R4 2.2K_4
R6 2.2K_4

8 G_CLK_DDC2 — Q21 2N7002K-T1-E3 — DDCCLK2 — R1 0_6 — DDCCLK3
8 G_DAT_DDC2 — Q22 2N7002K-T1-E3 — DDCDAT2 — R2 0_6 — DDCDAT3

C5 *10P/50V/COG_4@NC
C4 *10P/50V/COG_4@NC

LD-Note Calpella UMA
Quanta Computer Inc.

Size	Document Number	Rev
Custom	CRT CONN	
Date: Saturday, November 07, 2009	Sheet 18 of 50	

HDAudio Codec

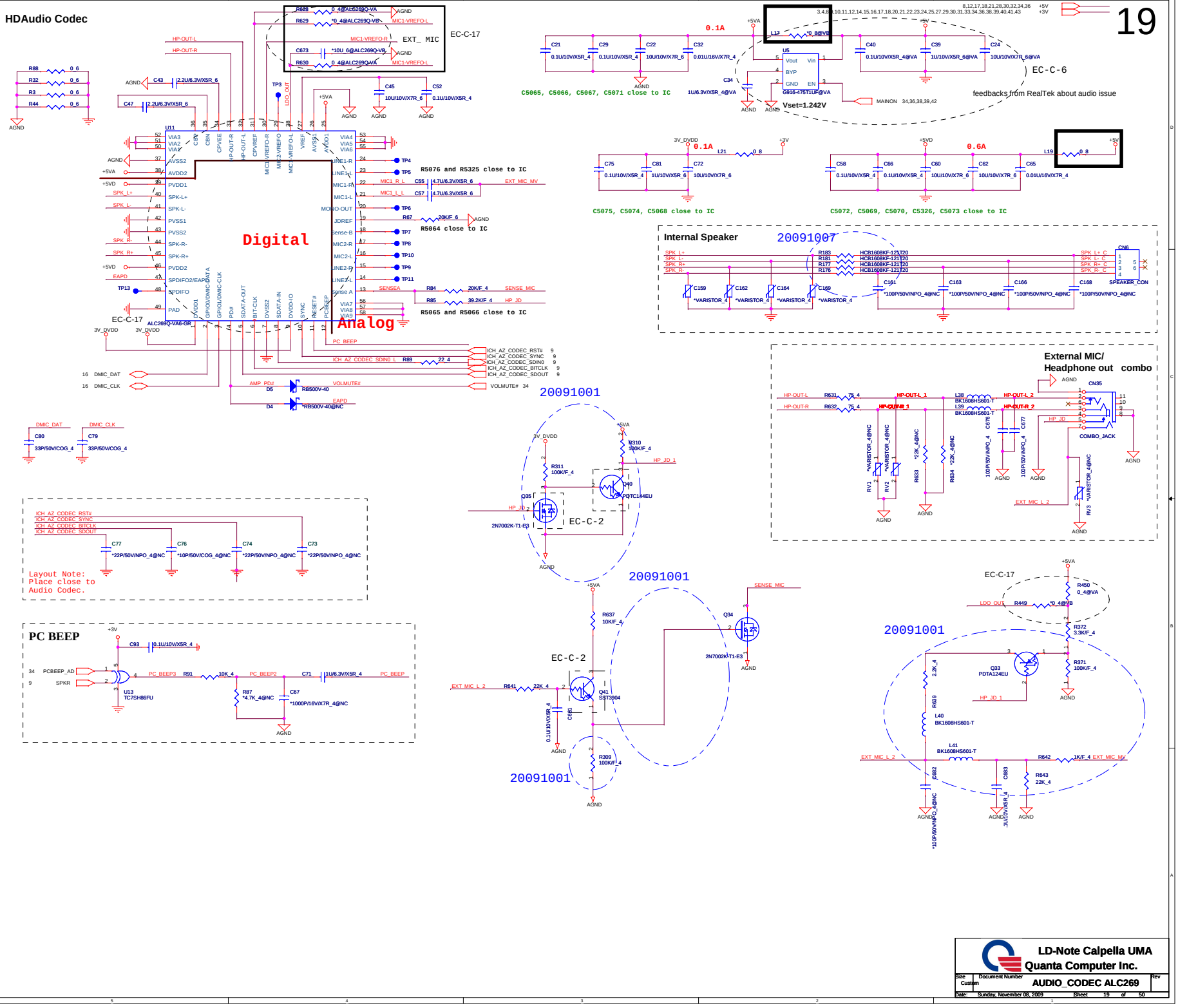

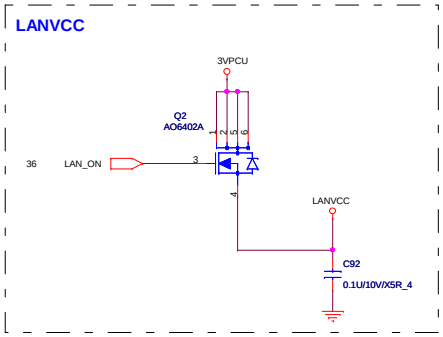

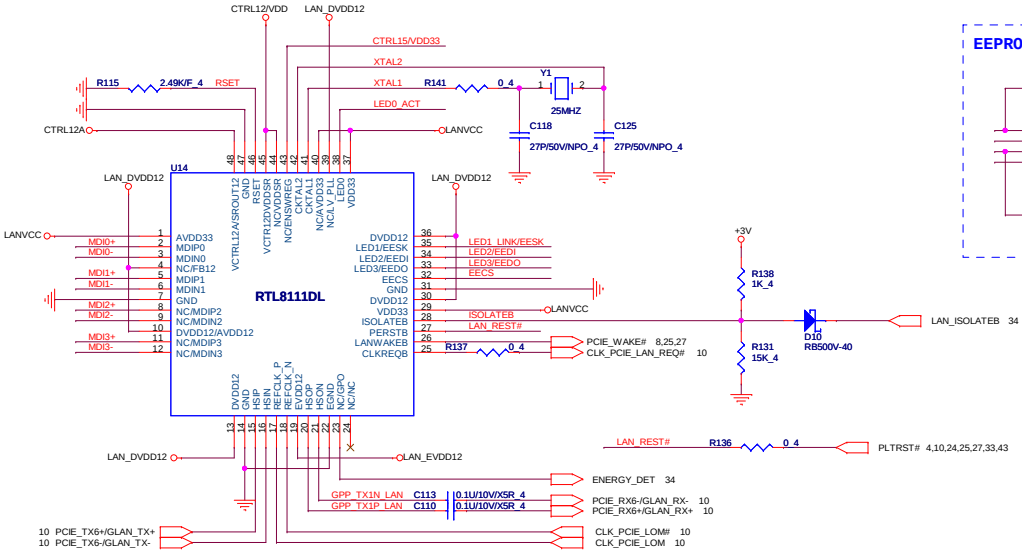

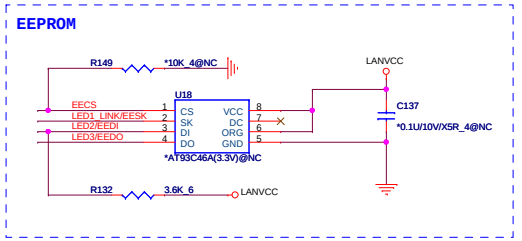

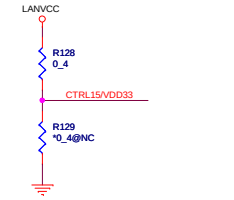

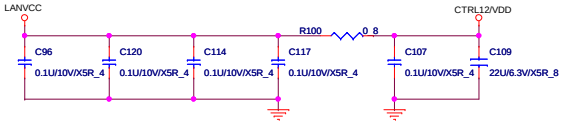

* C5110 to C5113 are for U5006 VDD33 pins-- 1, 29, 37 and 40.

Place C5113 ,C5094 closed to U5006 pins44,45.

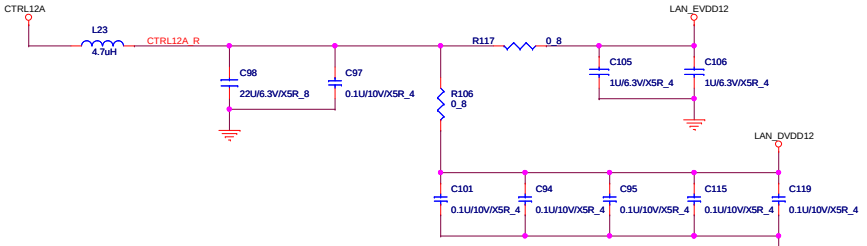

* C5116 and C5273 are for U5006 EVDD12 pin 19.

* C5119 to C5123 are for U5006 VDD12 pins-- 10, 13, 30, 36, 39.

Note 1: The Trace length between L1 and 8111DL's Pin 1 must be within 0.5 cm. C5 and C8 to L1 must be within 0.5cm. Refer to Layout guide for more detail.

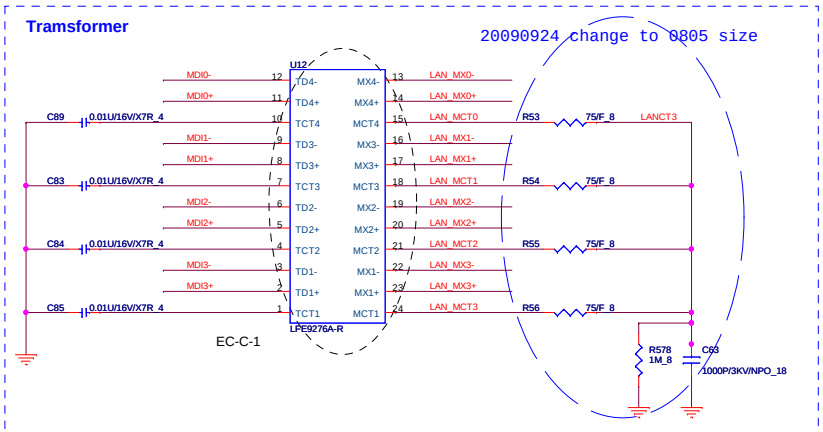

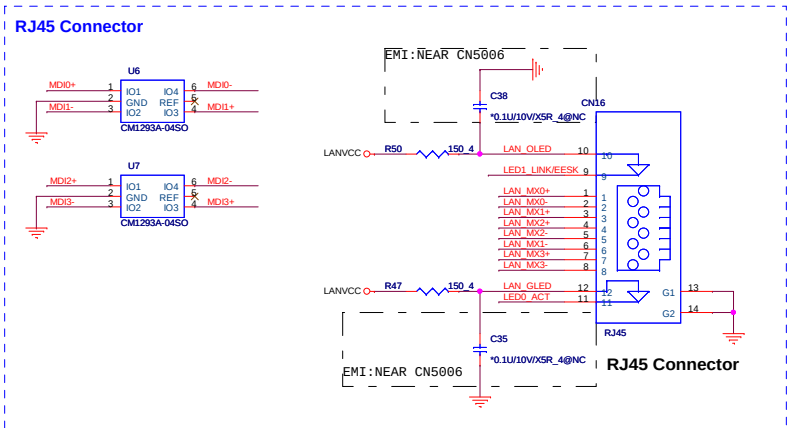

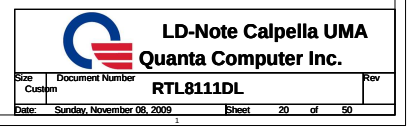

SATA Connector.

8,12,17,18,19,28,30,32,34,36 +5V
3,4,8,9,10,11,12,14,15,16,17,18,19,20,22,23,24,25,27,29,30,31,33,34,36,38,39,40,41,43 +3V

21

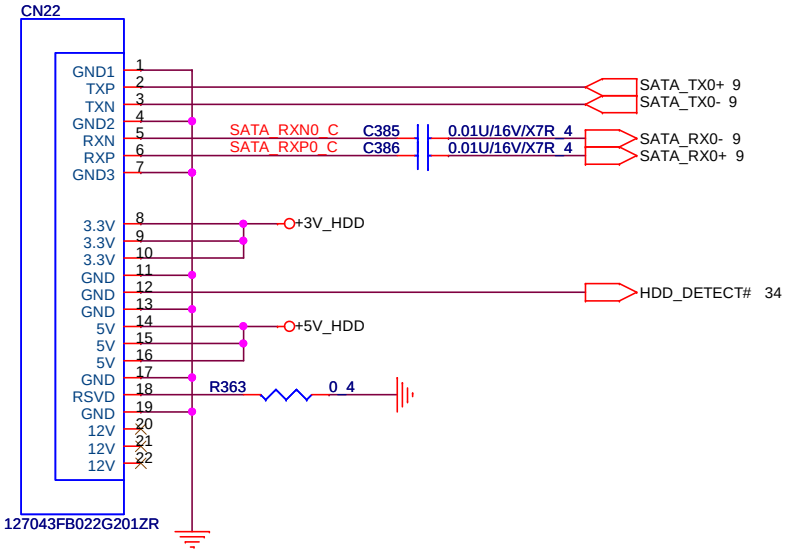

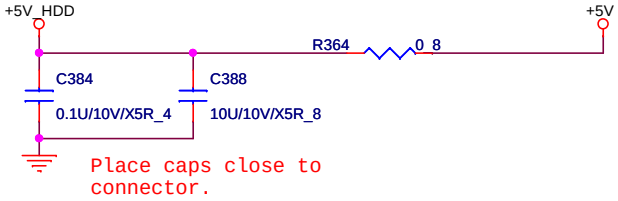

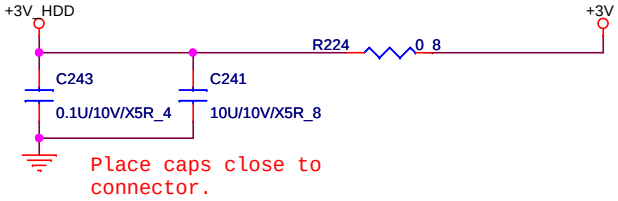

ODD Connector

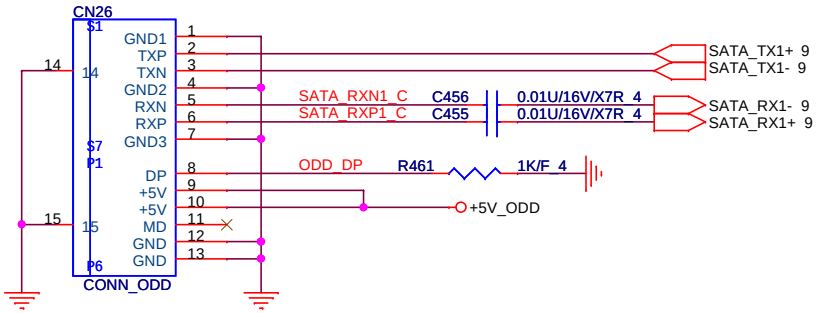

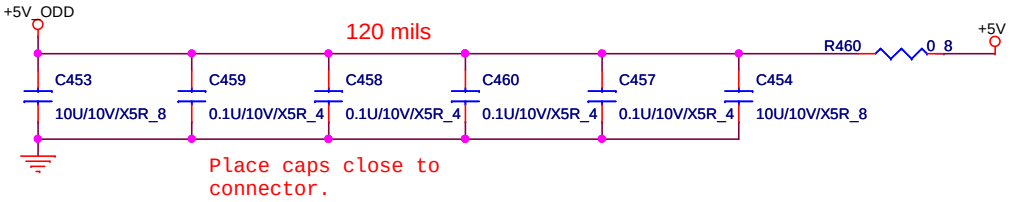

LD-Note Calpella UMA
Quanta Computer Inc.

Size	Document Number	Rev
Custom	SATA (HDD&CD_ROM)	
Date: Saturday, November 07, 2009	Sheet 21 of 50	

USBX1

EC-C-7

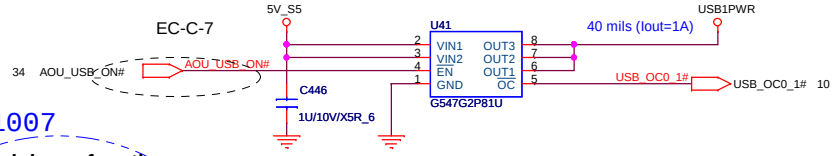

20091007

Support Black-berry function

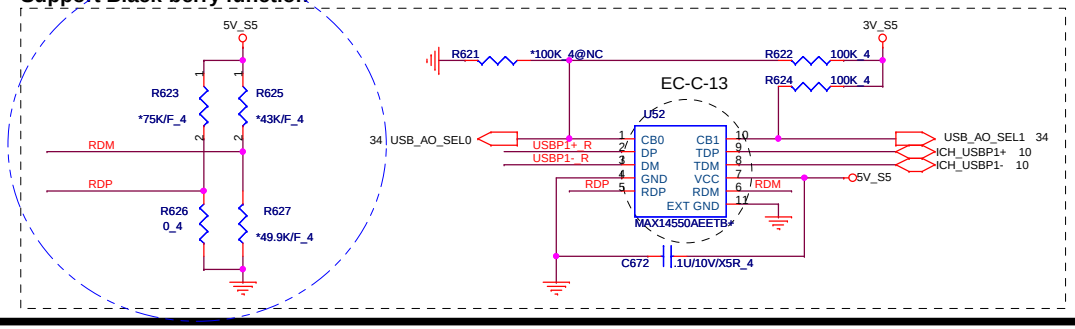

USB X1---> Wire to board conn

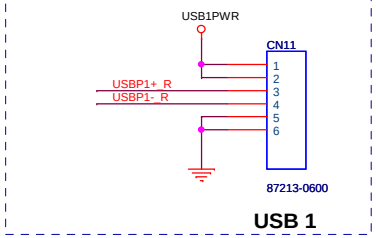

USB + E-SATA

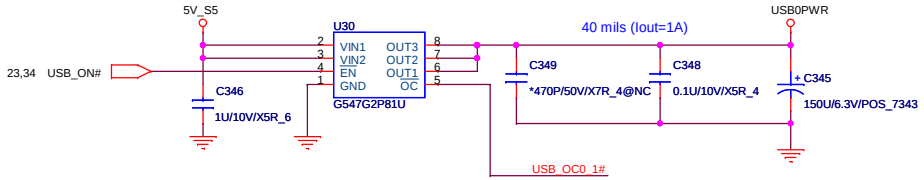

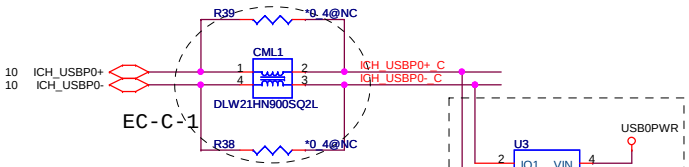

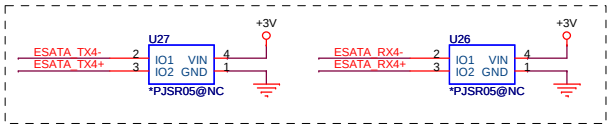

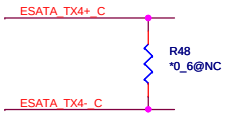

E-SATA RE-DRIVER

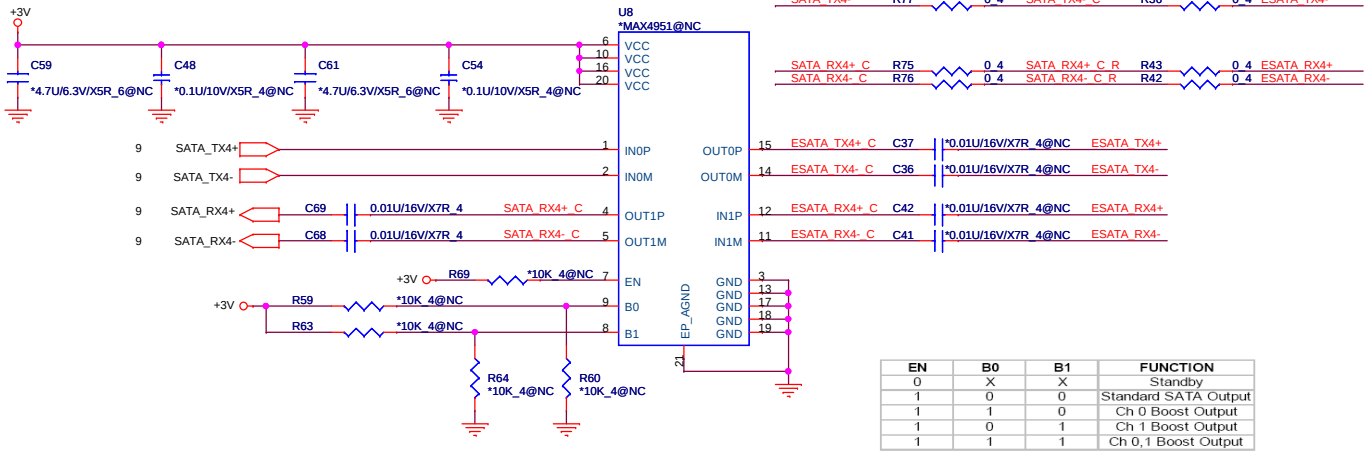

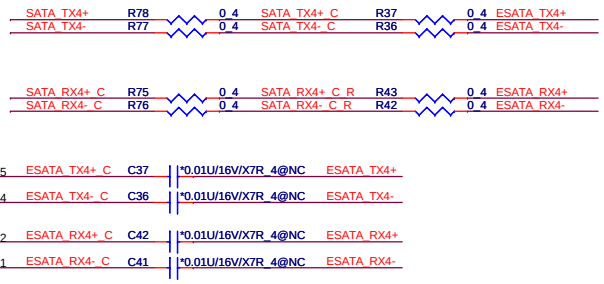

EN	B0	B1	FUNCTION
0	X	X	Standby
1	0	0	Standard SATA Output
1	1	0	Ch 0 Boost Output
1	0	1	Ch 1 Boost Output
1	1	1	Ch 0,1 Boost Output

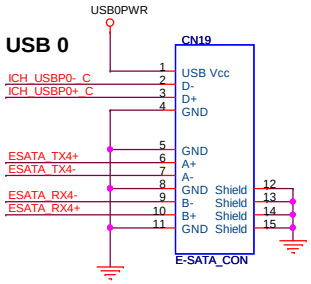

12,22,36 5V_S5
3,4,8,9,10,11,12,14,15,16,17,18,19,20,21,22,24,25,27,29,30,31,33,34,36,38,39,40,41,43 +3V
9,16,20,28,32,34,36,37,40,42 3VPCU
26,27,34,36,42 3VSUS

Finger Print

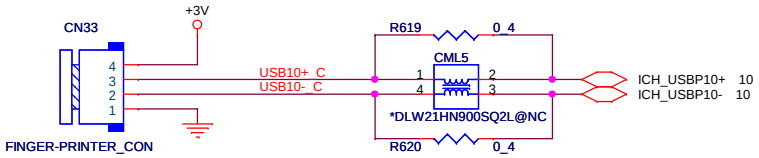

SIM Card CONN

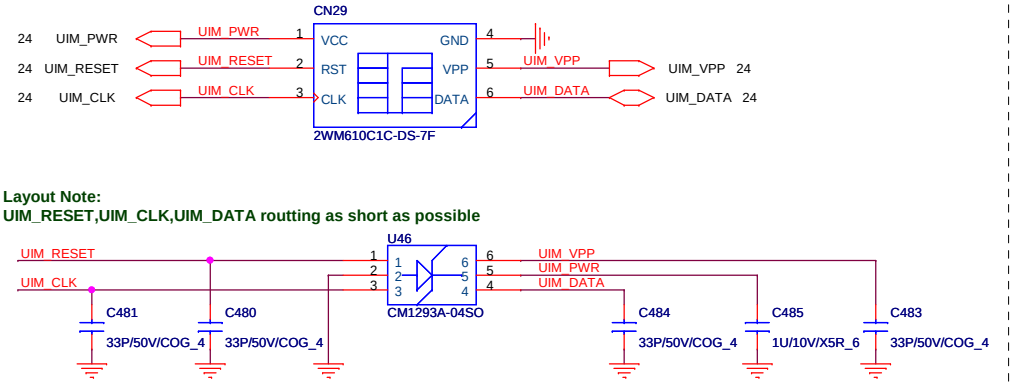

20090928

LOGO LED

USB 2

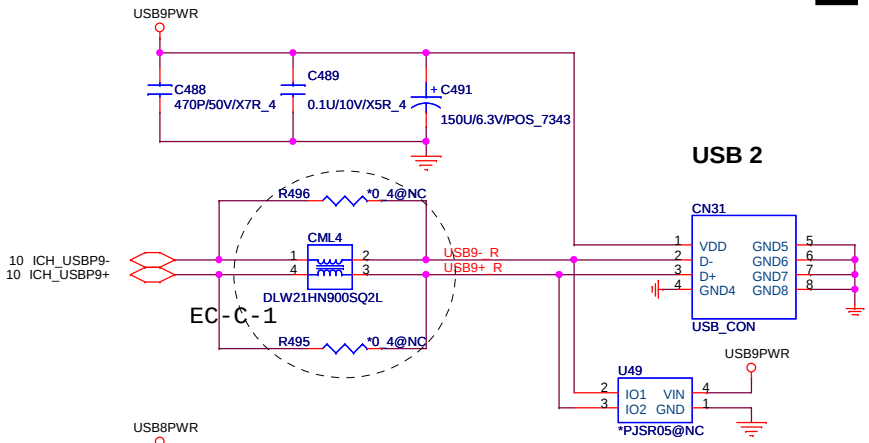

USB 3

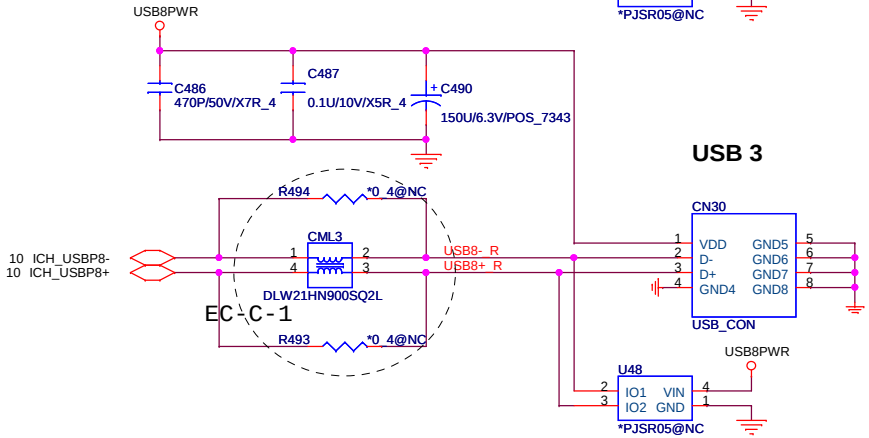

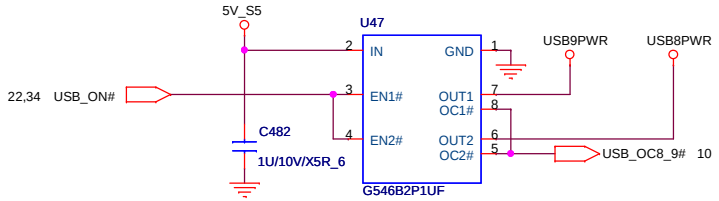

LD-Note Calpella UMA
Quanta Computer Inc.

Size	Document Number	Rev
Custom	USB X2/SIM_CARD/LEDs/RF	
Date: Saturday, November 07, 2009	Sheet 23 of 50	

3,4,8,9,10,11,12,14,15,16,17,18,19,20,21,22,23,25,27,29,30,31,33,34,36,38,39,40,41,43 +3V
3,25,27,38 +1.5V

MiniCard WWAN connector

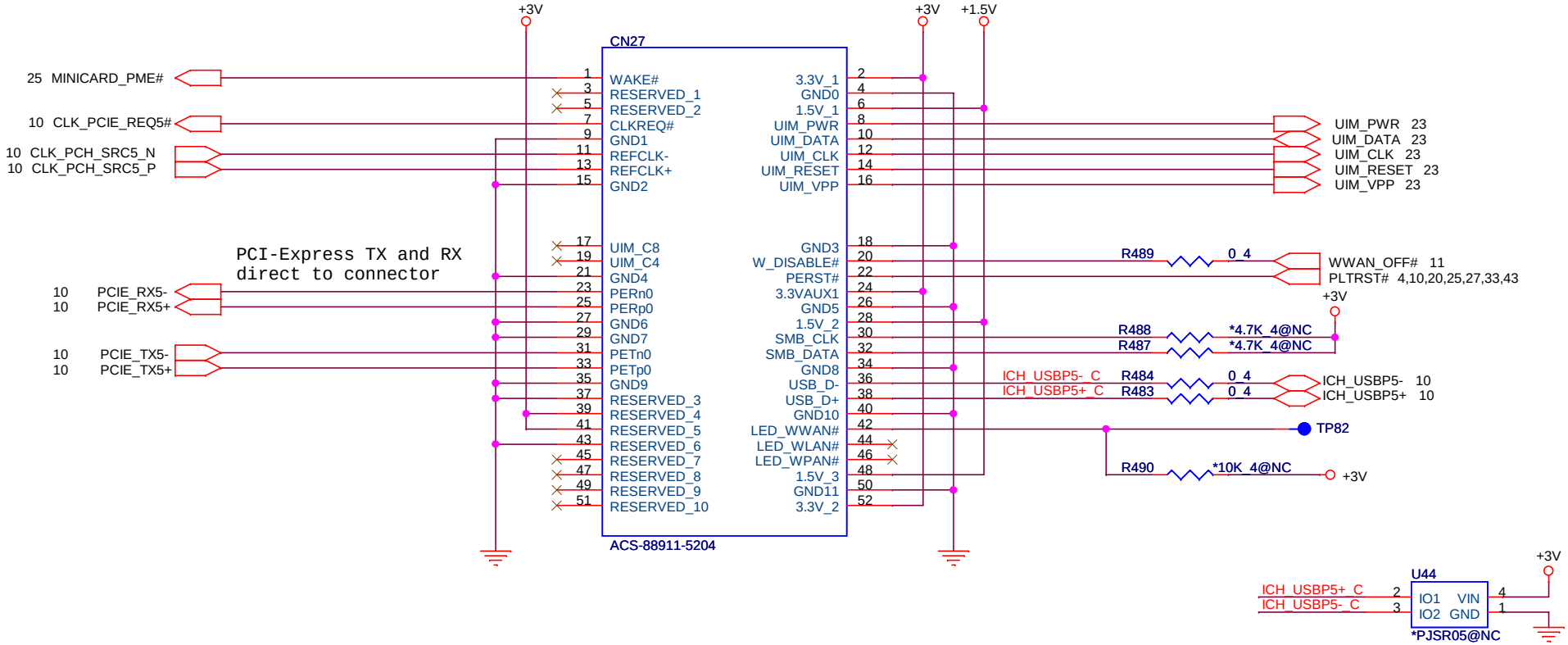

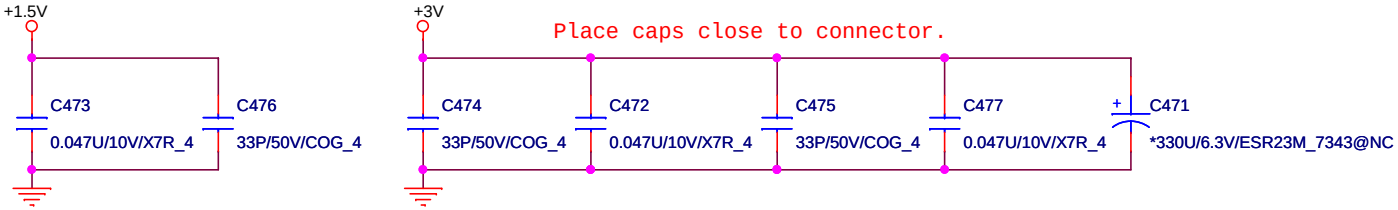

LD-Note Calpella UMA
Quanta Computer Inc.

Size	Document Number	Rev
Custom	MINI-Card (UWB, WWAN)	
Date: Saturday, November 07, 2009	Sheet 24 of 50	

MiniCard WLAN/WiMAX connector

25

3,4,8,9,10,11,12,14,15,16,17,18,19,20,21,22,23,24,27,29,30,31,33,34,36,38,39,40,41,43 +3V
3,24,27,38 +1.5V
9,16,20,28,32,34,36,37,40,42 3VPCU
16,36,37,38,39,40,41,42 VIN

PCI-Express TX and RX direct to connector

CN12

24 MINICARD_PME#	MINICARD_PME#	1 WAKE#	2 3.3V_1
29 BBC0EX1		3 RESERVED_1	4 GND0
29 BBC0EX2		5 RESERVED_2	6 1.5V_1
10 MINI1CLK_REQ#		7 CLKREQ#	8 UIM_PWR
		9 GND1	10 UIM_DATA
10 CLK_PCH_SRC2_N		11 REFCLK-	12 UIM_CLK
10 CLK_PCH_SRC2_P		13 REFCLK+	14 UIM_RESET
		15 GND2	16 UIM_VPP
	PLTRST# R303 0_4	17 UIM_C8	18 GND3
10 CLK_LPC_DEBUG	R302 0_4 CLK_DEBUG	19 UIM_C4	20 W_DISABLE#
10 PCIE_RX2-		21 GND4	22 PERST#
10 PCIE_RX2+		23 PERn0	24 3.3VAUX1
		25 PERp0	26 GND5
		27 GND6	28 1.5V_2
10 PCIE_TX2-		29 GND7	30 SMB_CLK
10 PCIE_TX2+		31 PETn0	32 SMB_DATA
		33 PETp0	34 GND8
		35 GND9	36 USB_D-
		37 RESERVED_3	38 USB_D+
		39 RESERVED_4	40 GND10
		41 RESERVED_5	42 LED_WWAN#
		43 RESERVED_6	44 LED_WLAN#
8 LPC_PD#	R305 *0_4@NC LPC_PD#_R	45 RESERVED_7	46 LED_WPAN#
9 LPC_DRQ#0	R308 *0_4@NC LPC_LDRQ0#_R	47 RESERVED_8	48 1.5V_3
9,34 IRQ_SERIRQ	R307 *0_4@NC IRQ_SERIRQ_R	49 RESERVED_9	50 GND11
8,34 CLKRUN#	R306 *0_4@NC CLKRUN#_R	51 RESERVED_10	52 3.3V_2

ACS-88911-5204

+3.3V_WLAN +3.3V_WLAN +1.5V

WLAN_OFF_R#
PLTRST#

LPC_LFRAME# 9,34
LPC_LAD3 9,34
LPC_LAD2 9,34
LPC_LAD1 9,34
LPC_LAD0 9,34

PLTRST# 4,10,20,24,27,33,43

+3.3V_WLAN
R479 *4.7K_4@NC
R481 *4.7K_4@NC

ICH_USBP4- C R486 0_4 ICH_USBP4- 10
ICH_USBP4+ C R485 0_4 ICH_USBP4+ 10

TP83

R482 *10K_4@NC +3V

3V_S5
R304 *10K_4@NC
8,20,27 PCIE_WAKE# 3 Q19 1 MINICARD_PME#
*PDTC144EU@NC

WLAN_OFF_R# D27 RB500V-40 WLAN_OFF# 11
R480 *0_4@NC

+3.3V_WLAN
ICH_USBP4- C 2 IO1 VIN 4
ICH_USBP4+ C 3 IO2 GND 1
U45
*PJSR05@NC

+3.3V_WLAN +3V
R478 0_8

+1.5V +3.3V_WLAN

Place caps close to connector.

C466 0.01U/16V/X7R_4
C463 0.1U/10V/X5R_4
C469 10U/6.3V/X5R_8
C467 0.1U/10V/X5R_4
C468 0.047U/10V/X7R_4
C464 0.1U/10V/X5R_4
C465 0.047U/10V/X7R_4
C470 4.7U/10V/X5R_8
C462 *330U/6.3V/ESR23M_7343@NC

LD-Note Calpella UMA
Quanta Computer Inc.

Size	Document Number	Rev
Custom	MINI-Card (WLAN)	
Date: Saturday, November 07, 2009	Sheet 25 of 50	

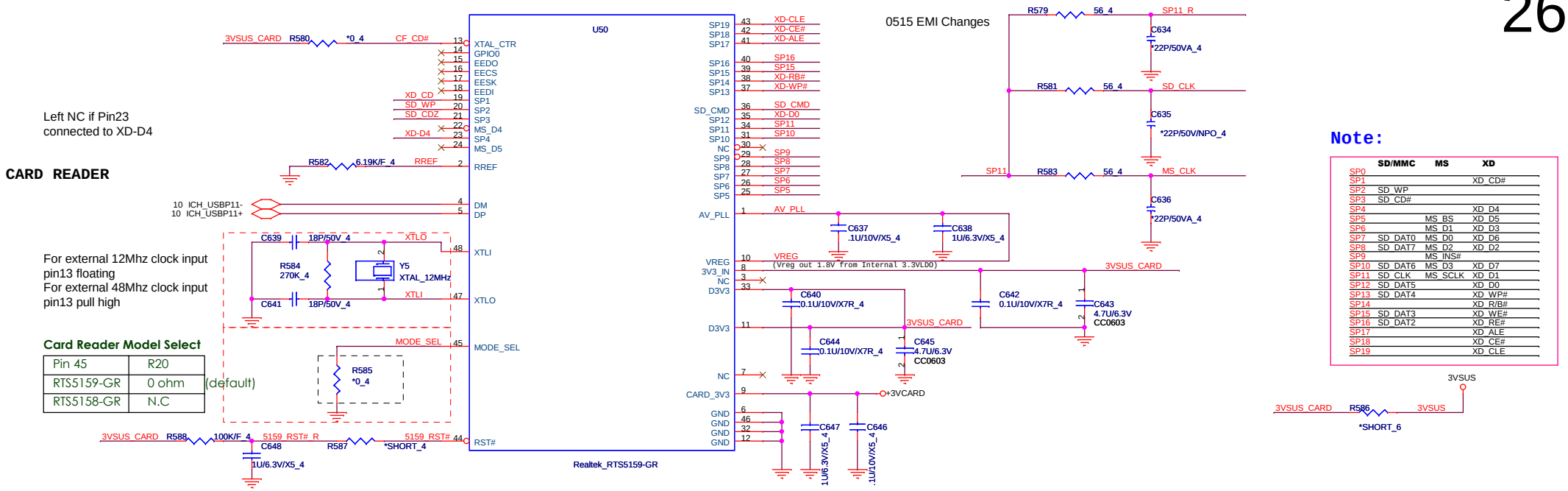

7 in 1 Socket(MS, MS PRO,SD, MMC, xD...)

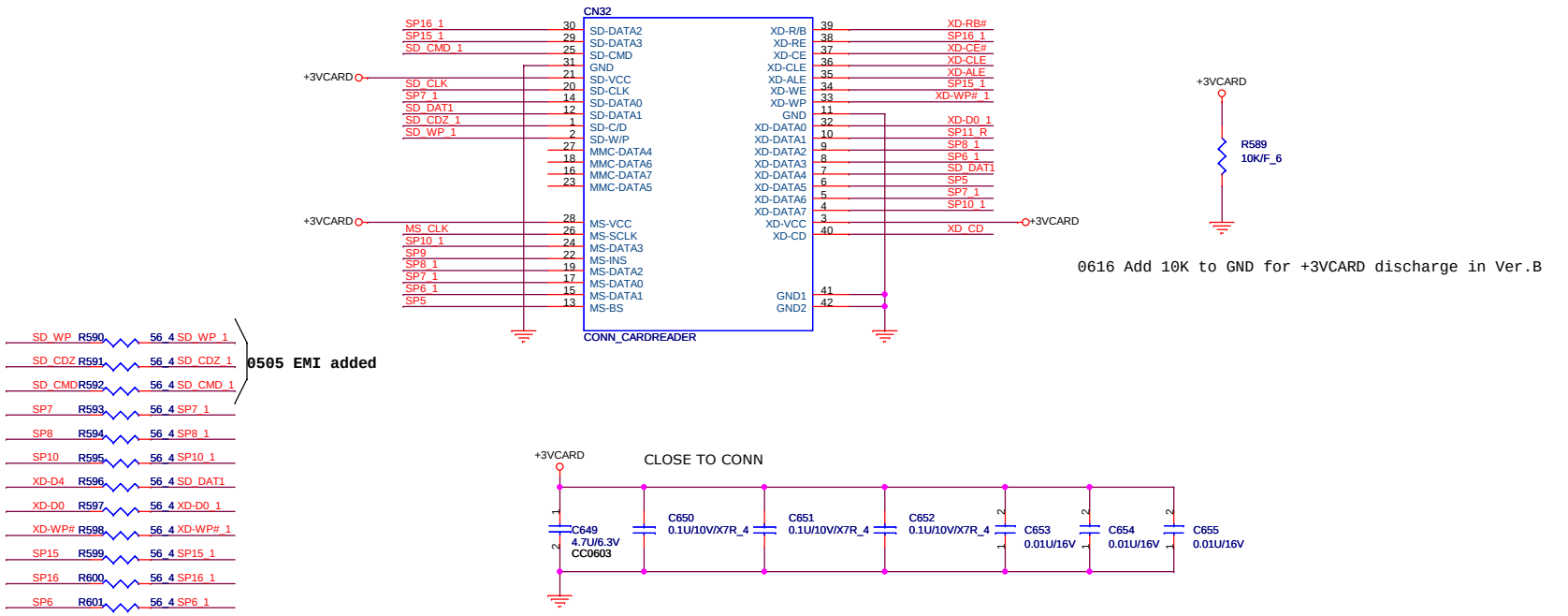

Company	LD-Note Calpella UMA Quanta Computer Inc.
Size / Document Number	Custom / Card Reader-RTS5159-GR
Rev	
Date: Saturday, November 07, 2009	Sheet 26 of 50

Express Card

3,4,8,9,10,11,12,14,15,16,17,18,19,20,21,22,23,24,25,29,30,31,33,34,36,38,39,40,41,43 +3V
3,24,25,38 +1.5V
23,26,34,36,42 3VSUS

EC-C-1

10 ICH_USBP2+
10 ICH_USBP2-
R179 *0_4@NC
R178 *0_4@NC
L26
DLW21HN900SQ2L
USBP2_D+
USBP2_D-

U19
IO1 VIN
IO2 GND
*PJSR05@NC
+3.3V_CARD
FOR ESD

+1.5V_CARD Max. 650mA, Average 500mA.
+3V_CARD Max. 1300mA, Average 1000mA.

U20
ExpressSwitch
AUXIN
3.3VIN_0
3.3VIN_1
1.5VIN_0
1.5VIN_1
AUXOUT
3.3VOUT_0
3.3VOUT_1
1.5VOUT_0
1.5VOUT_1
SHDN#
STBY#
SYSRST#
NC
GND0
PERST#
CPPE#
CPUSB#
OC#
RCLKEN
G577BSR91U/RT9716AGQW
+1.5V
+3V
3VSUS
+3.3V_CARDAUX
+3.3V_CARD
+1.5V_CARD

3VSUS
R172 *100K_4@NC 2231_SHDN#
R173 *100K_4@NC 2231_STBY#
Q39
2N7002
4,10,20,24,25,33,43 PLTRST#
+3V
CARD_RESET#
EXPRCRD_PWREN#
CPUSB#
R182 *100K_4@NC
R180 *100K_4@NC
TP18
TP17

20090928
avoid current leakage

CN4
48303-0033
JAE PX10FS16PH-26P
USBP2_D-
USBP2_D+
CPUSB#
+3.3V_CARDAUX
R170 10K_4
R171 10K_4
+1.5V_CARD
8,20,25 PCIE_WAKE#
+3.3V_CARDAUX
CARD_RESET#
+3.3V_CARD
10 CARD_CLK_REQ#
11 EXPRCRD_PWREN#
10 CLK_PCH_SRC4_N
10 CLK_PCH_SRC4_P
EXPRCRD_PWREN#
10 PCIE_RX4-
10 PCIE_RX4+
10 PCIE_TX4-
10 PCIE_TX4+
C674 0.047U/25V/X7R_4
GND_1
USB-
USB+
CPUSB#
RSV_0
RSV_1
SMBCLK
SMBDATA
+1.5V_0
+1.5V_1
WAKE#
+3.3VAUX
PERST#
+3.3V_1
+3.3V_2
CLKREQ#
CPPE#
REFCLK-
REFCLK+
GND_2
PERn0
PERp0
GND_3
PETn0
PETp0
GND_4
NC1
NC2
NC3
NC4
NC5

+1.5V C170 0.1U/10V/X5R_4 Please the cap near pin 12 & 14(1.5VIN).
+3V C157 0.1U/10V/X5R_4 Please the cap near pin 2 & 4 (3.3VIN).
3VSUS C165 0.1U/10V/X5R_4 Please the cap near pin 17 (AUXIN).
+3.3V_CARDAUX C167 0.1U/10V/X5R_4 Please the cap near pin 15 (AUXOUT).
+3.3V_CARD C160 0.1U/10V/X5R_4 Please the cap near pin 3 & 5 (3.3VOUT).
+1.5V_CARD C171 0.1U/10V/X5R_4 Please the cap near pin 11 & 13(1.5VOUT).

+1.5V_CARD C158 0.1U/10V/X5R_4 C155 0.1U/10V/X5R_4 Please the cap near connector.
+3.3V_CARD C153 0.1U/10V/X5R_4 C156 0.1U/10V/X5R_4 C154 10U/6.3V/X5R_6 Please the cap near connector.

LD-Note Calpella UMA
Quanta Computer Inc.

Size	Document Number	Rev
Custom	Express Card	
Date: Saturday, November 07, 2009	Sheet 27 of 50	

KEYBOARD

KEYBOARD connector

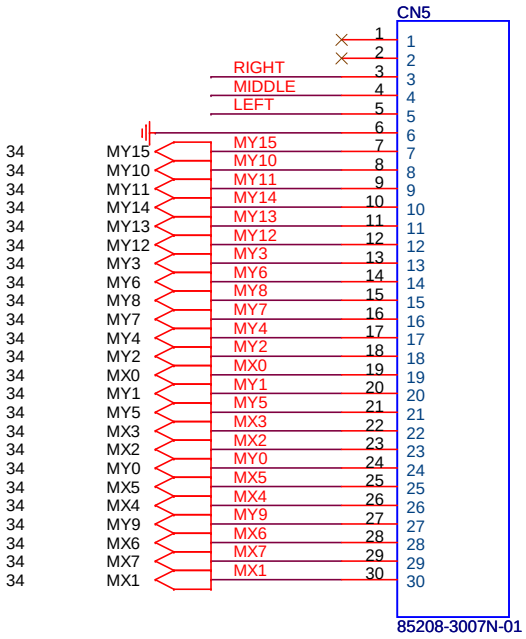

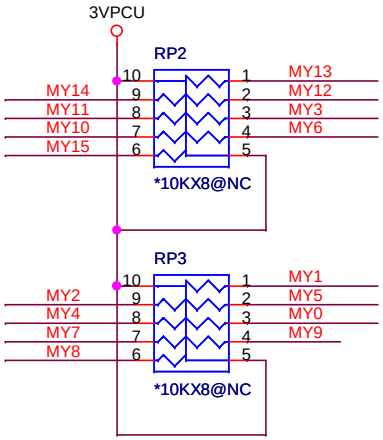

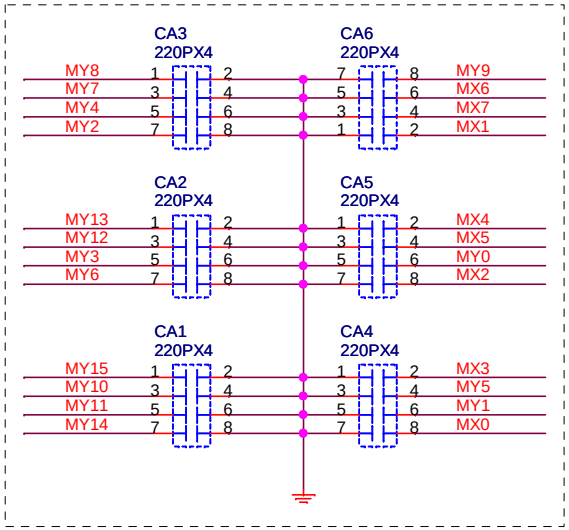

For EMI request

8,12,17,18,19,21,30,32,34,36 +5V
9,16,20,32,34,36,37,40,42 3VPCU

Touch pad

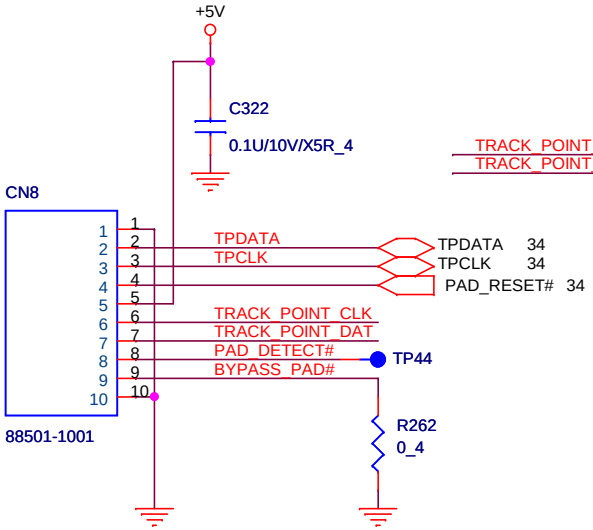

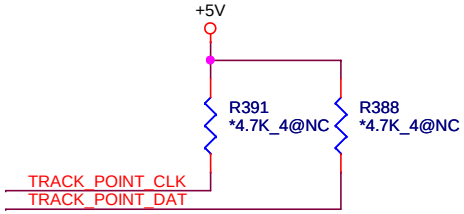

TPDATA 34
TPCLK 34
PAD_RESET# 34

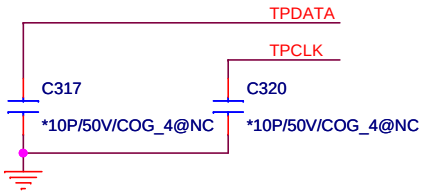

Place C5303 ,C5302 closed to CN5020

TRACK POINT

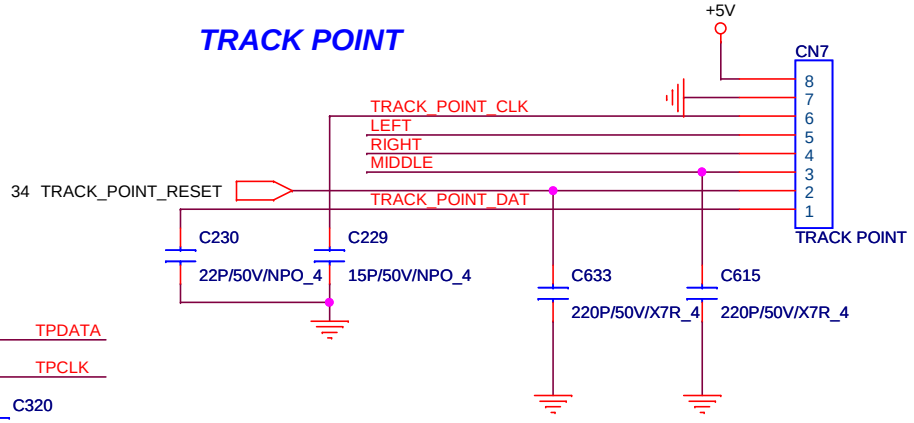

LD-Note Calpella UMA Quanta Computer Inc.		
Size: Custom	Document Number: K/B, T/P	Rev
Date: Saturday, November 07, 2009	Sheet 28 of 50	

BLUETOOTH

3,4,8,9,10,11,12,14,15,16,17,18,19,20,21,22,23,24,25,27,30,31,33,34,36,38,39,40,41,43 +3V

29

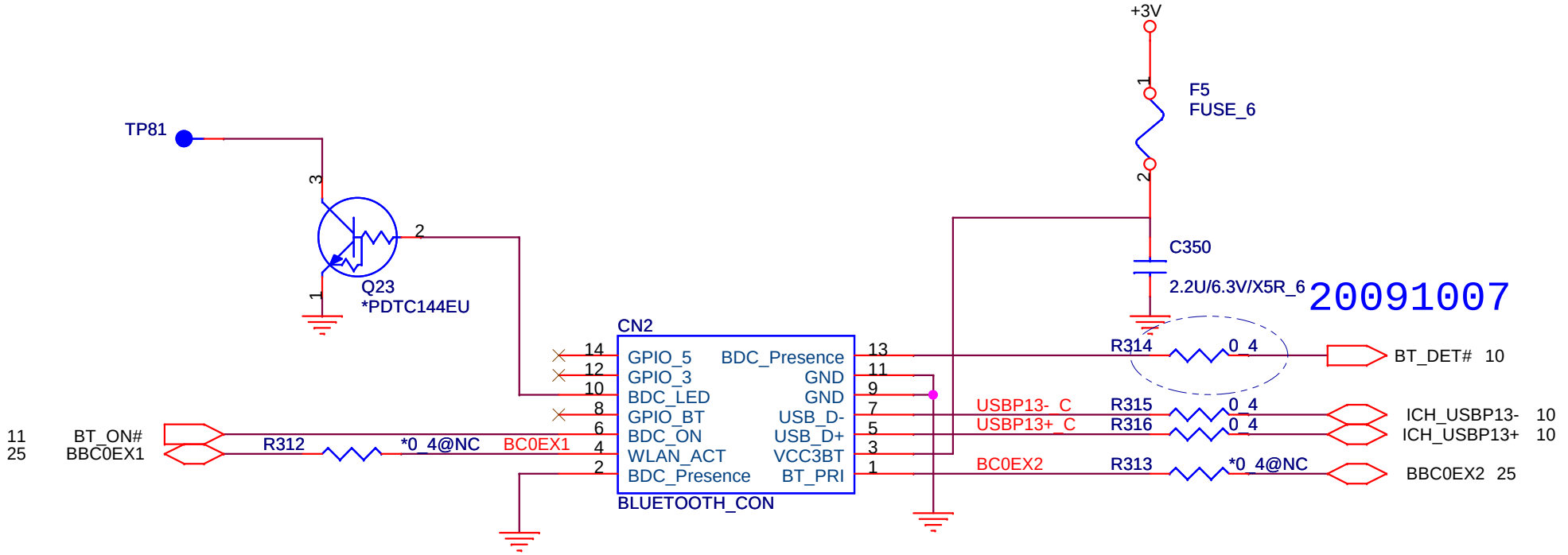

LD-Note Calpella UMA
Quanta Computer Inc.

Size	Document Number	Rev
Custom	B/T	
Date: Saturday, November 07, 2009	Sheet 29 of 50	

FAN CONTROL

3,4,8,9,10,11,12,14,15,16,17,18,19,20,21,22,23,24,25,27,29,31,33,34,36,38,39,40,41,43 +3V
8,12,17,18,19,21,28,32,34,36 +5V

30

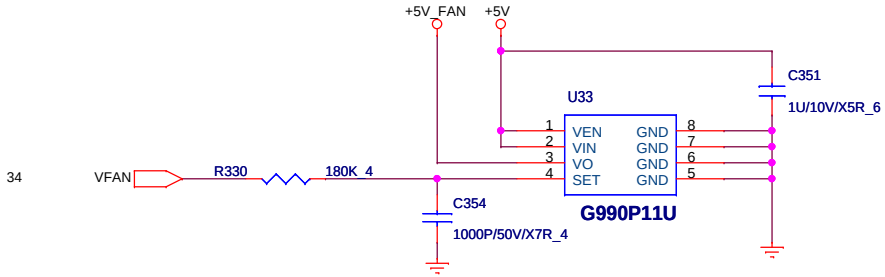

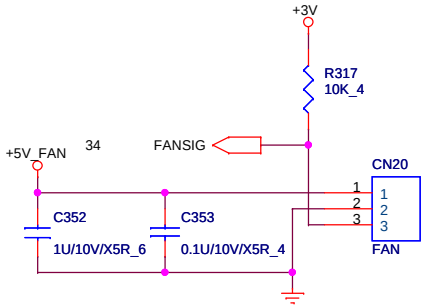

EC-C-9

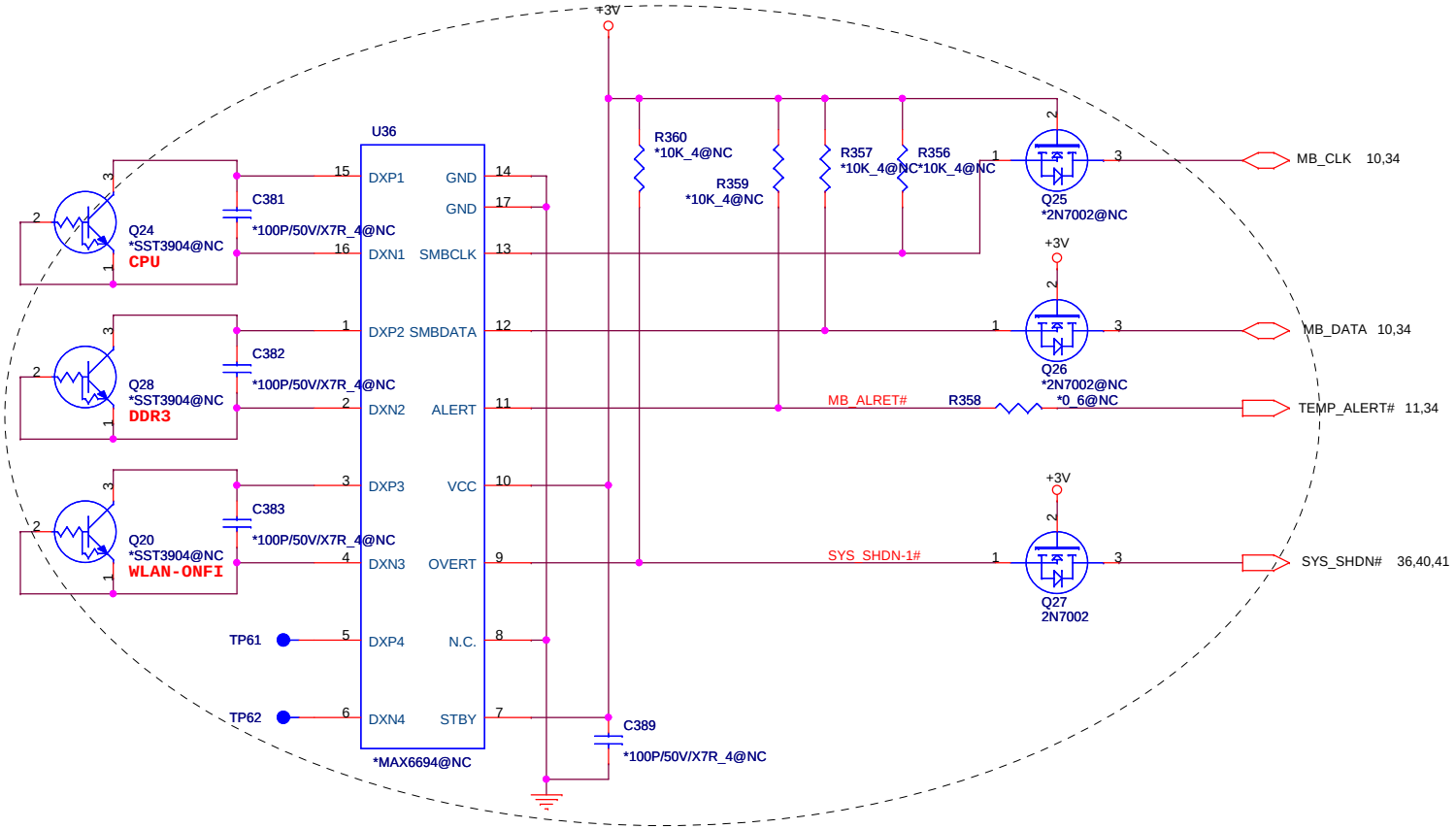

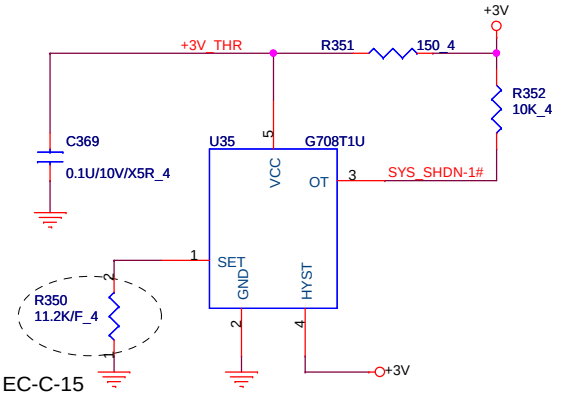

EC-C-15

	LD-Note Calpella UMA Quanta Computer Inc.		
Size Custom	Document Number FAN & THERMAL		Rev
Date: Saturday, November 07, 2009		Sheet 30 of 50	

G-SENSOR (2-Axial)

3,4,8,9,10,11,12,14,15,16,17,18,19,20,21,22,23,24,25,27,29,30,33,34,36,38,39,40,41,43 +3V
16,36,38,40 +15V

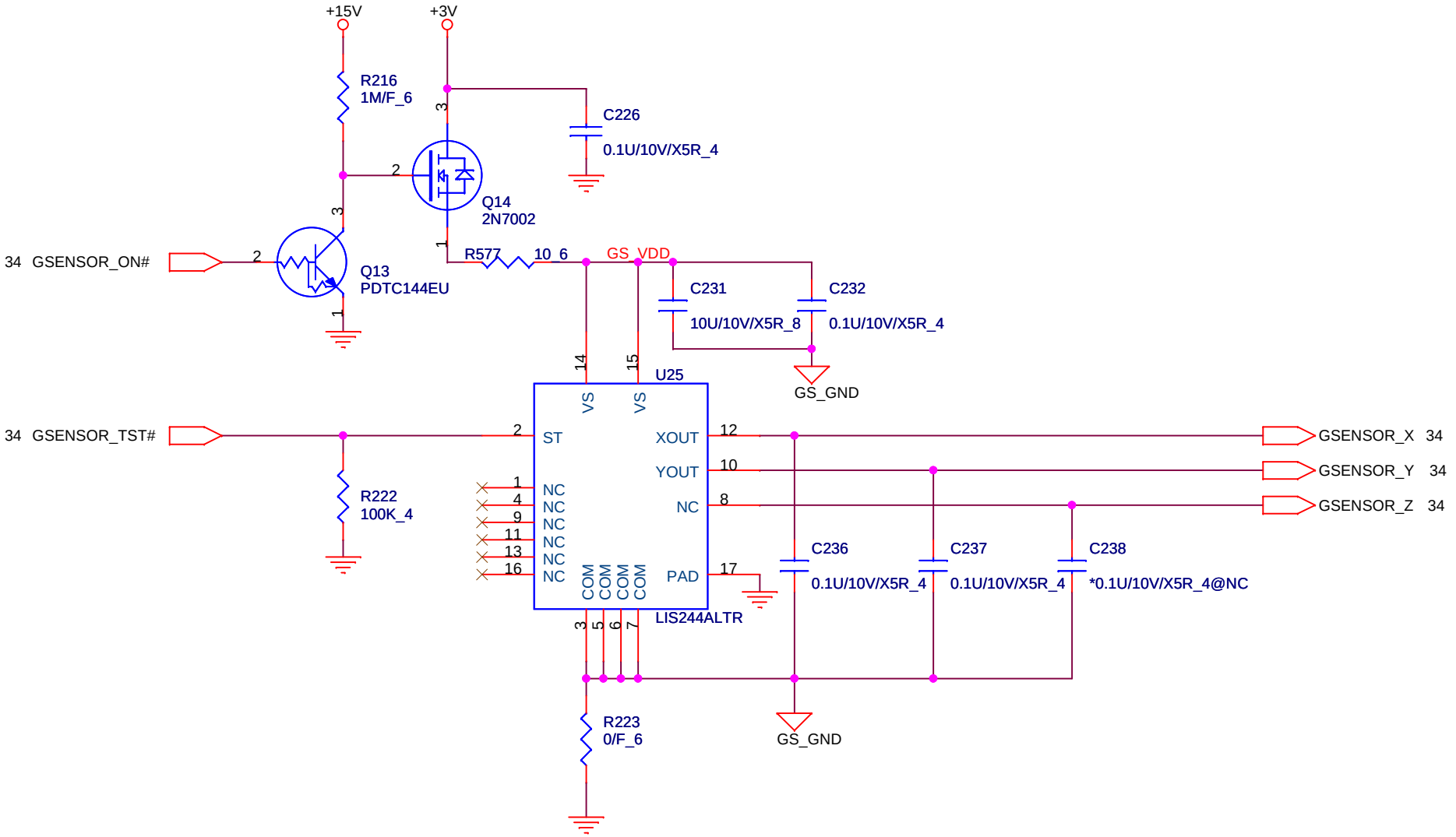

LD-Note Calpella UMA
Quanta Computer Inc.

Size	Document Number	Rev
Custom	G-SENSOR	
Date: Saturday, November 07, 2009	Sheet 31 of 50	

3,4,8,9,10,11,12,14,15,16,17,18,19,20,21,22,23,24,25,27,29,30,31,33,34,36,38,39,40,41,43 +3V
9,16,20,28,34,36,37,40,42 3VPCU

32

20080928

FFC TO B LED RIGHT SIDE CONNECTOR

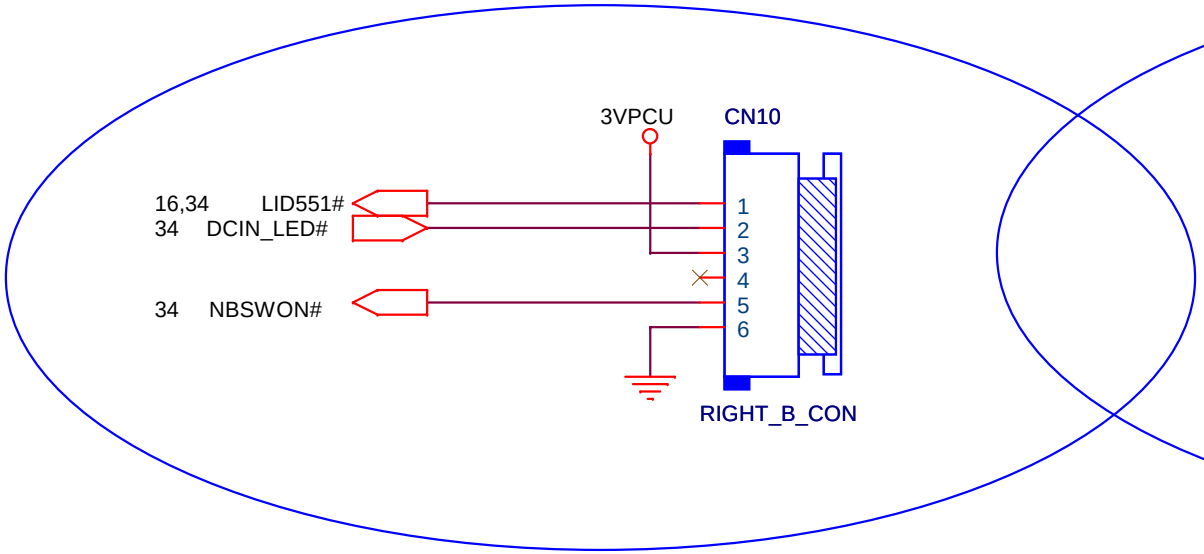

20081002

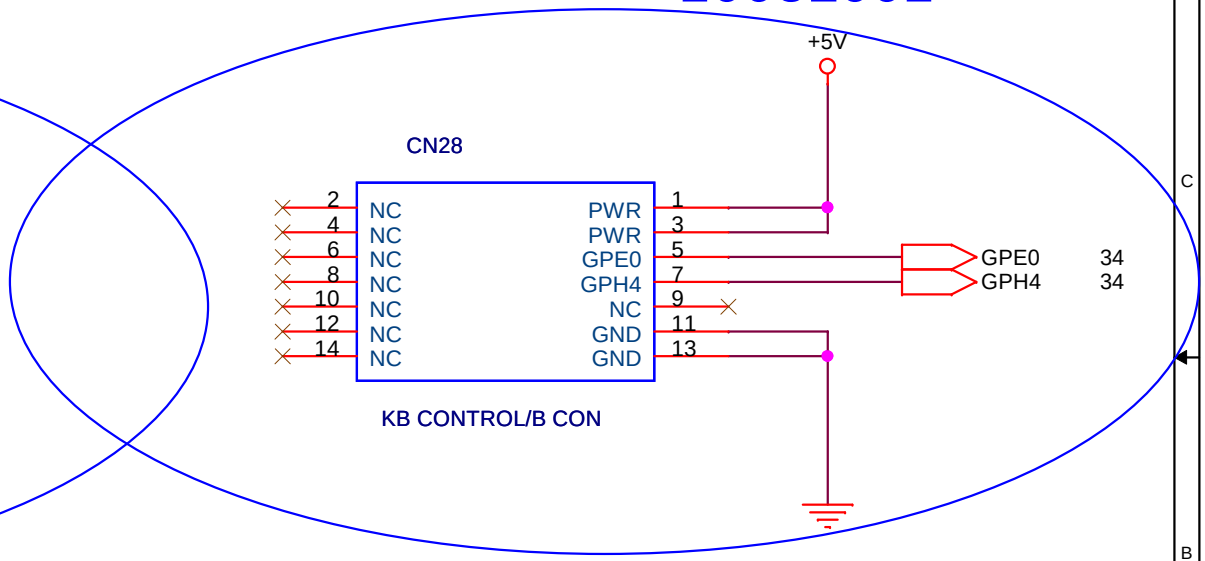

LD-Note Calpella UMA Quanta Computer Inc.		
Size: Custom	Document Number: B TO B CON	Rev
Date: Saturday, November 07, 2009	Sheet 32 of 50	

iTPM ENABLE/DISABLE

3V_S5

EC-C-12

R366 *1K_4 SPI_SI

iTPM Function	R366
Enable	1K
Disable	NC

3,4,8,9,10,11,12,14,15,16,17,18,19,20,21,22,23,24,25,27,29,30,31,34,36,38,39,40,41,43 +3V

EC-C-12

For PCH

32Mbit (4M Byte), SPI

3V_S5 3V_S5

R361 3.3K_4

R367 10K_4

U37

9 SPI_CS0#_R
9 SPI_CLK_R
9 SPI_SI_R
9 SPI_SO

SPI_CS0#_R R377 15_4 SPI_CS0#
SPI_CLK_R R365 15_4 SPI_CLK
SPI_SI_R R362 15_4 SPI_SI
SPI_SO R378 15_4 SPI_SO_R

1	CE#	VDD	8
6	SCK		
5	SI		
2	SO	HOLD#	7
3	WP#	VSS	4

W25Q32BVSSIG

C387 22P/50V/NPO_4

C400 0.1U/10V/X5R_4

EC-C-18

RFID

+3V

R204 4.7K_4

D16 RB500V-40

4,34,38,39,40,41,42,43 HWPG

4,10,20,24,25,27,43 PLTRST#

PROT

D17 RB500V-40

+3V

U22

R202 100K_4
R203 100K_4
PROT

1	L1	VCC	8
2	L2		
3	PROT	WP	7
6	SCL		
5	SDA	GND	4

C213 0.1U/10V/X5R_4

R190 1K_4

3,14,15 CLK_SCLK
3,14,15 CLK_SDATA

PCA24S08D
tssop8-4_9-65

LD-Note Calpella UMA
Quanta Computer Inc.

Size	Document Number	Rev
Custom	iTPM & RFID EEPROM	
Date: Saturday, November 07, 2009	Sheet 33 of 50	

3,4,8,9,10,11,12,14,15,16,17,18,19,20,21,22,23,24,25,27,29,30,31,33,36,38,39,40,41,43 +3V
9,16,20,28,32,36,37,40,42 3VPCU
9,12 +3VRTC
8,12,17,18,19,21,28,30,32,36 +5V

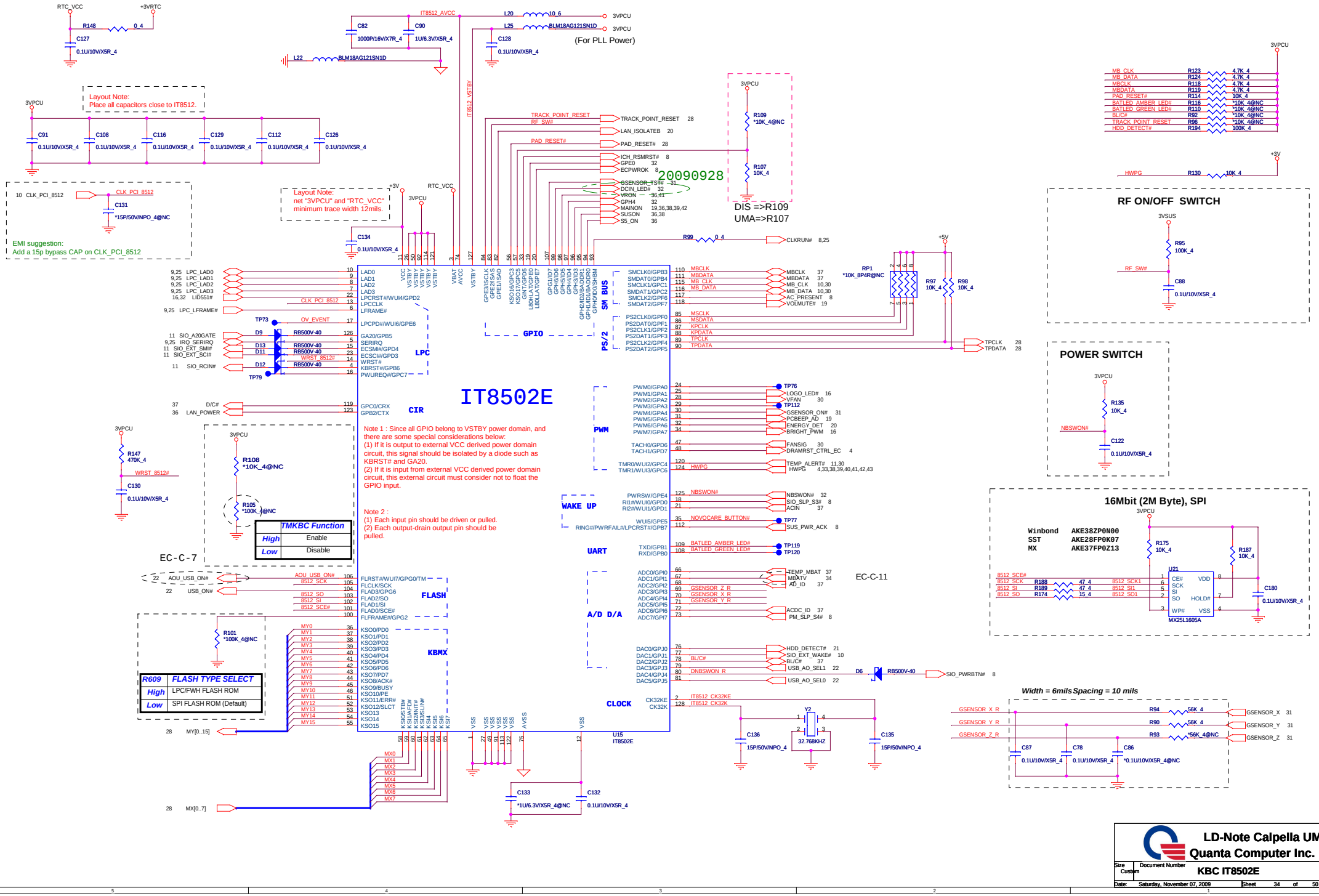

MiniCard WLAN

HOLE13 HOLE
HOLE14 HOLE

MiniCard WWAN

HOLE35 HOLE
HOLE36 HOLE

Hole for PCH support

HOLE34 HOLE
HOLE33 HOLE

Drink Hole

HOLE8 *HOLE

Bluetooth nut

HOLE3 HOLE

EC-C-4

Hole for CPU support

HOLE29 *HOLE
HOLE31 *HOLE
HOLE30 *HOLE
HOLE32 *HOLE

VGA nut

HOLE27 HOLE
HOLE28 HOLE
HOLE26 HOLE

GP5 *RE270X220NP
+1.05V_VTT

GP6 *RE270X220NP
+1.05V_VTT

GP4 *RE236X494NP

Boundary Hole

HOLE7 *HOLE
HOLE4 *HOLE
HOLE5 *HOLE
HOLE15 *HOLE
HOLE10 *HOLE
HOLE1 *HOLE
HOLE9 *HOLE
HOLE17 *HOLE
HOLE2 *HOLE

Break Hole

HOLE11 *HOLE

EC-C-4

Boundary Hole

HOLE6 *HOLE
HOLE16 *HOLE
HOLE25 *HOLE
HOLE23 *HOLE
HOLE21 *HOLE
HOLE24 *HOLE

EC-C-4

K/B Control/B Nut

HOLE18 HOLE

Boundary Hole (ODD)

HOLE12 *HOLE

PAD

GP2 *re190x217np
GP3 *RE270X220NP
GP1 *RE270X220NP
GP7 *SPAD-SPE1NP
GP8 *SPAD-RE85X155NP
GP9 *SPAD-RE270X320NP
GP10 *SPAD-RE270X320NP
GP11 *SPAD-RE315X325NP
GP12 *SPAD-RE420X165NP

LD-Note Calpella UMA
Quanta Computer Inc.

Size	Document Number	Rev
Custom	HOLD & SKEW	
Date: Saturday, November 07, 2009	Sheet 35 of 50	

DISCHARGE

+3.3V, +5V

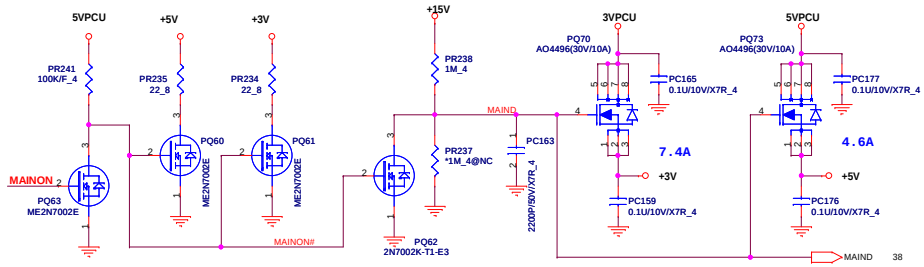

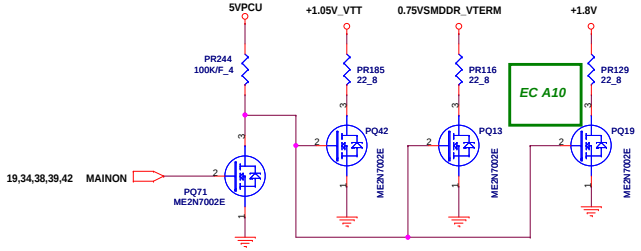

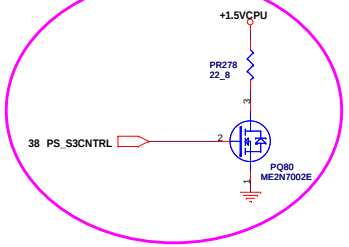

3V_S5, 5V_S5

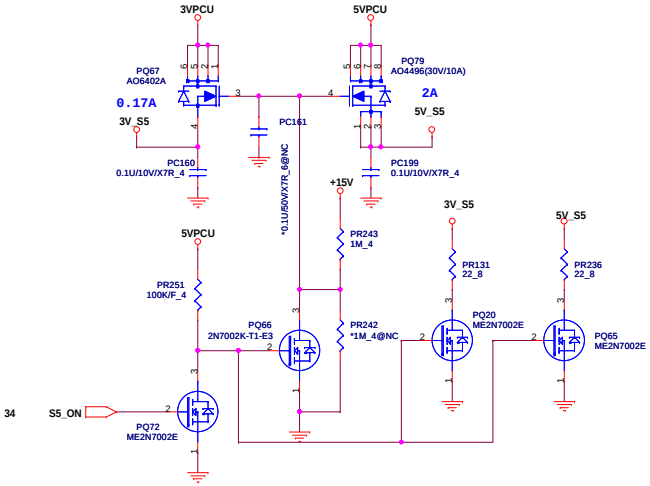

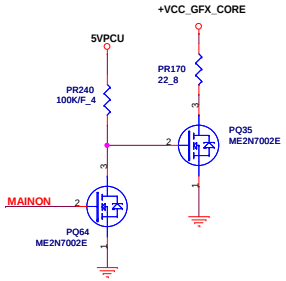

LANVCC

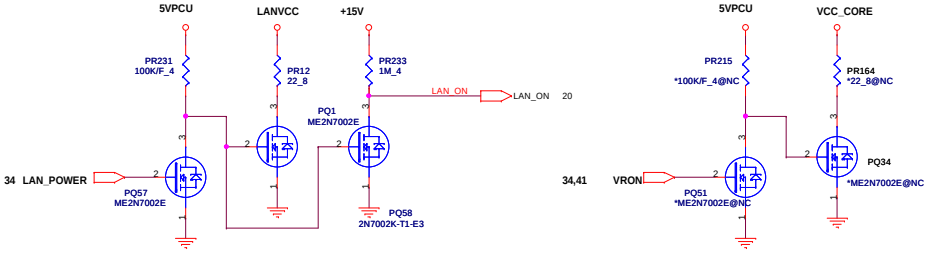

3VSUS, 5VSUS

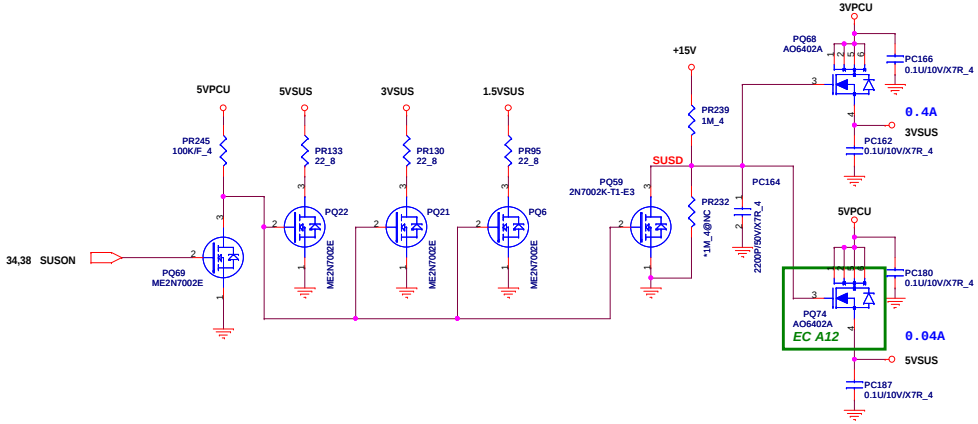

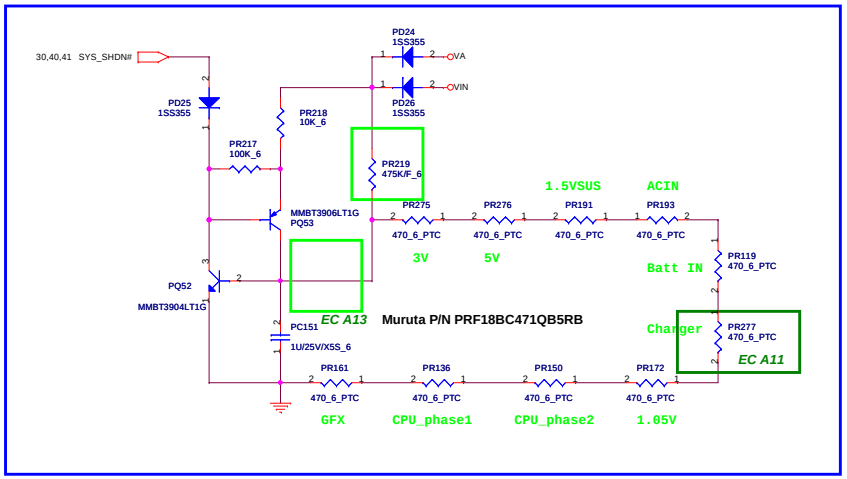

R138=0.02m ohm for 65W adapter-->current limit is 3A;

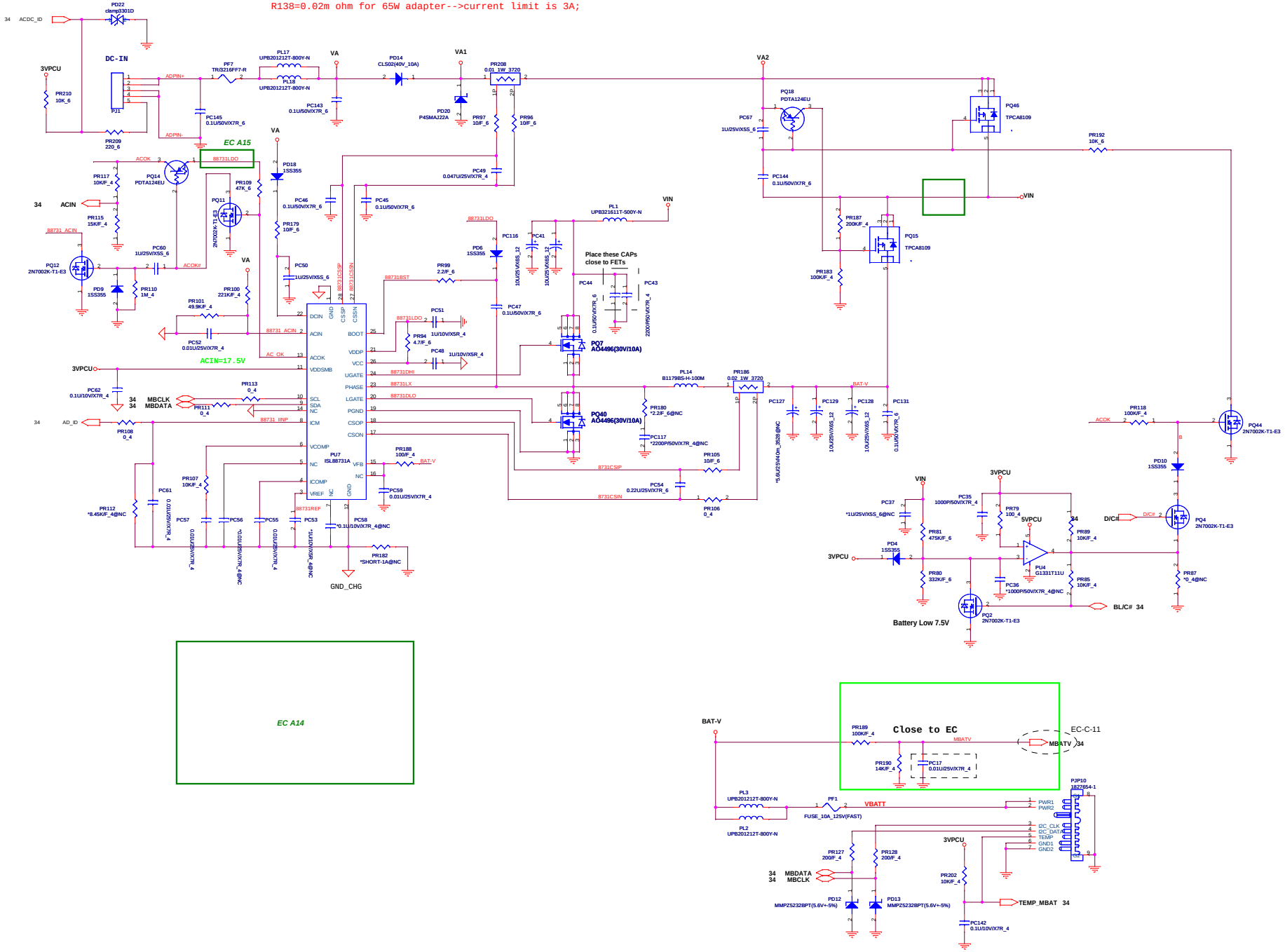

Quanta Computer Inc.	G-NOTE Calpella (UMA)
Size: Custom	Document Number: Charger(ISL88731A) Rev: 1B
Date: Saturday, November 07, 2009	Sheet 37 of 50

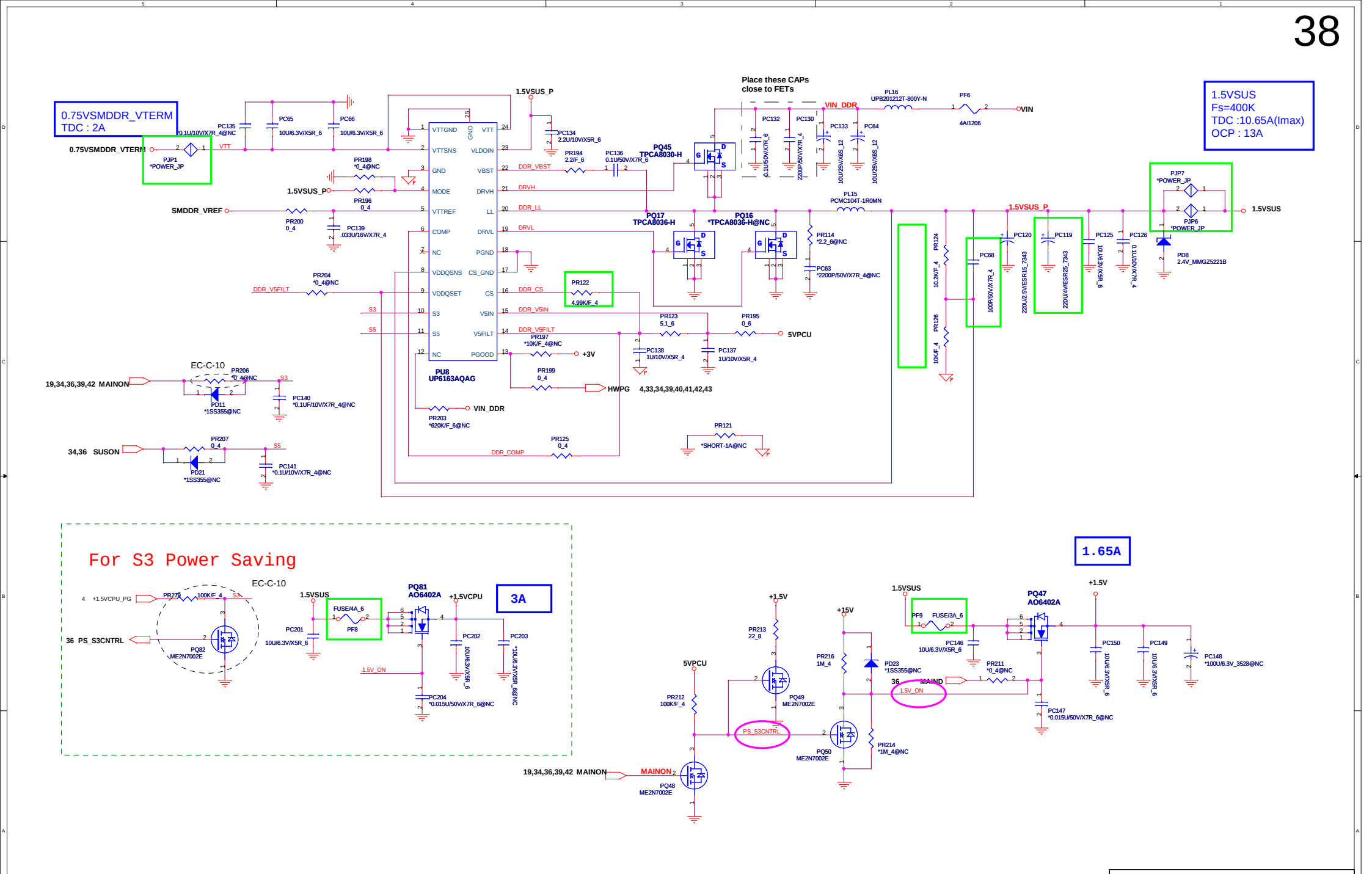

G-NOTE Calpella (UMA)
Quanta Computer Inc.

Size	Document Number	Rev
Custom	DDR3/0.75VSMDDR (UP6163AQAG)	1B

Date: Saturday, November 07, 2009 Sheet 38 of 50

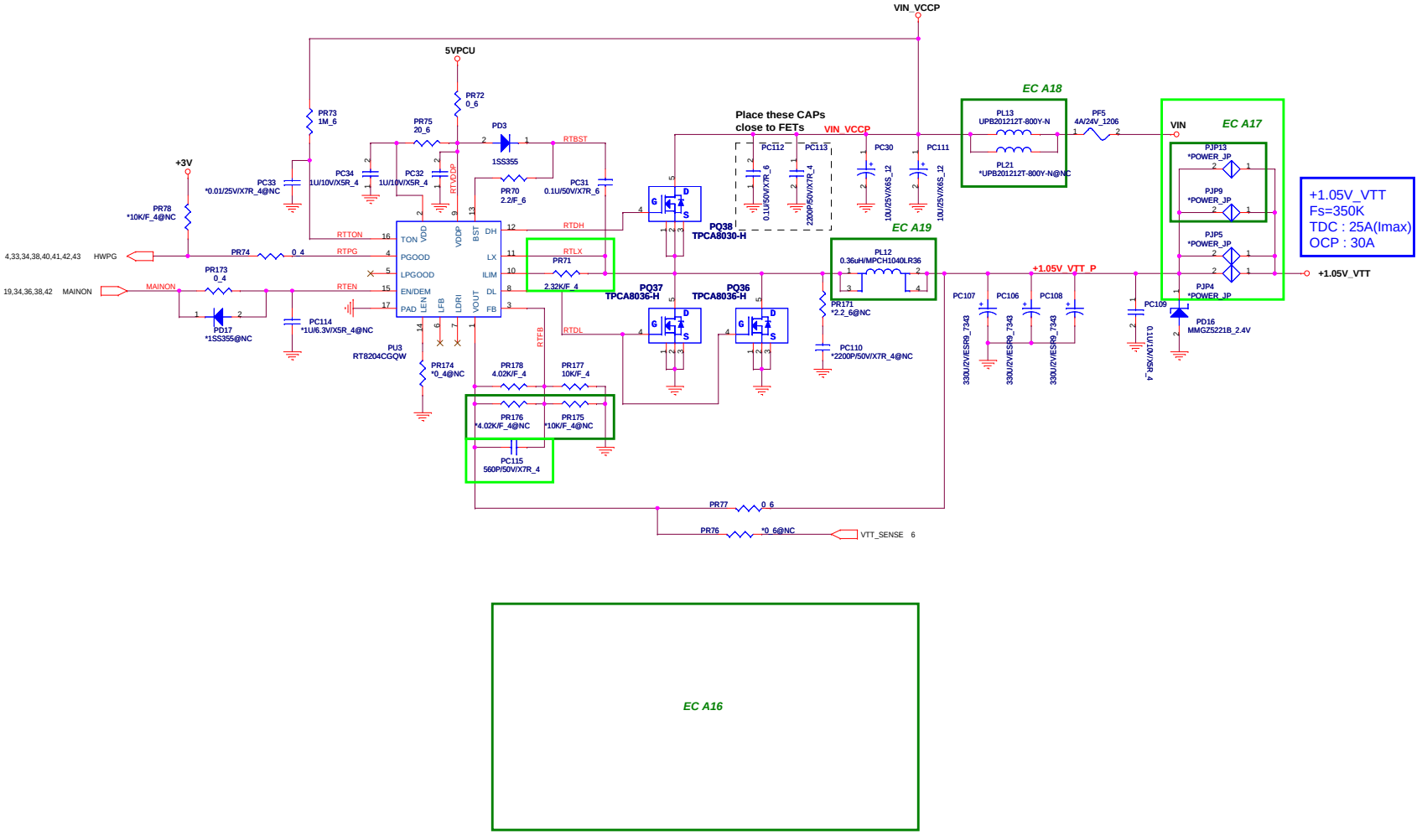

G-NOTE Calpella (UMA)		
Quanta Computer Inc.		
Size: C	Document Number: 1.05V_VTT/1.05_PCH (RT8204)	Rev: 1B
Date: Saturday, November 07, 2009	Sheet 39 of 50	

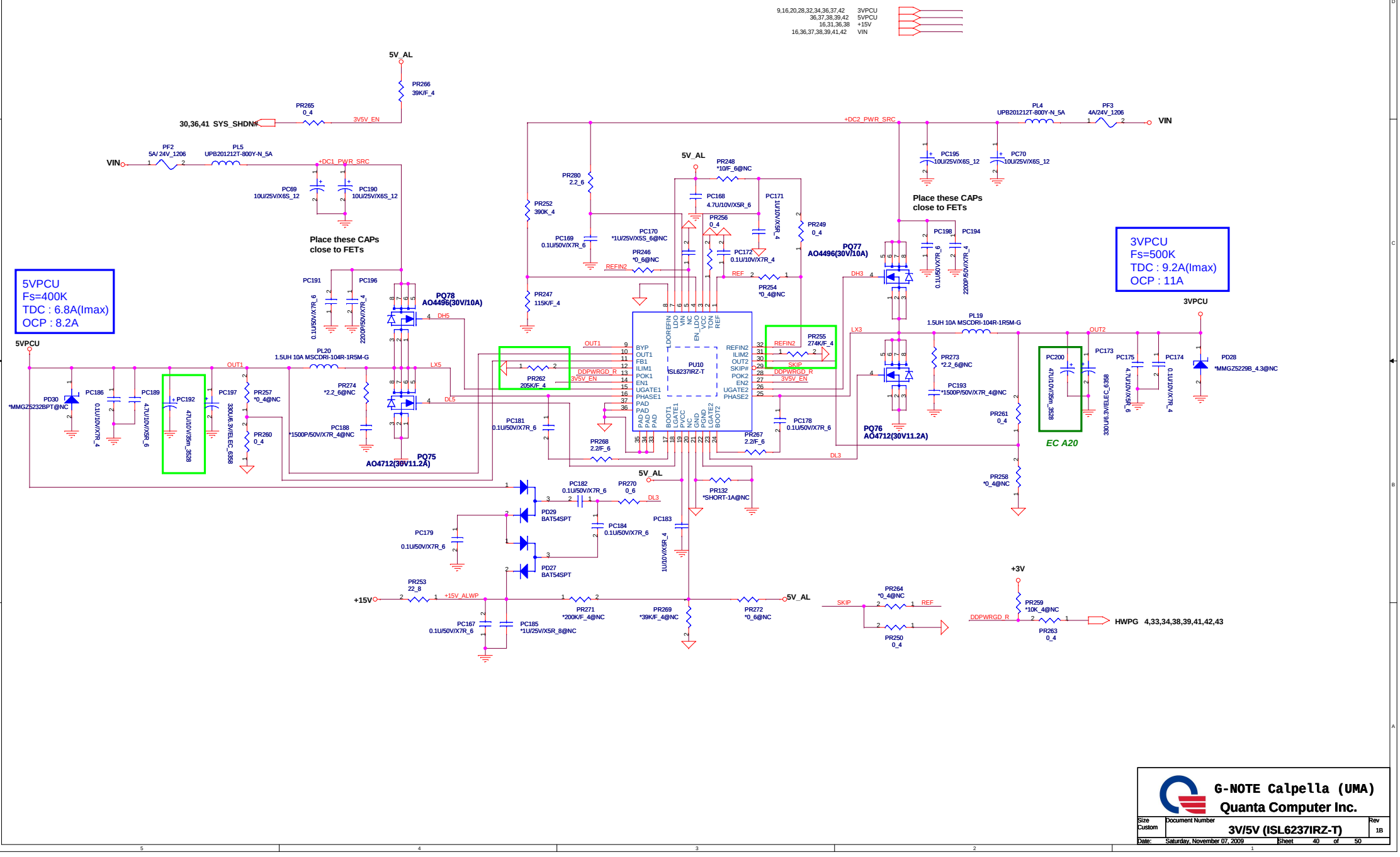

G-NOTE Calpella (UMA)	
Quanta Computer Inc.	
Size: Custom	Document Number: 3V/5V (ISL6237IRZ-T)
Rev: 1B	
Date: Saturday, November 07, 2009	Sheet 40 of 50

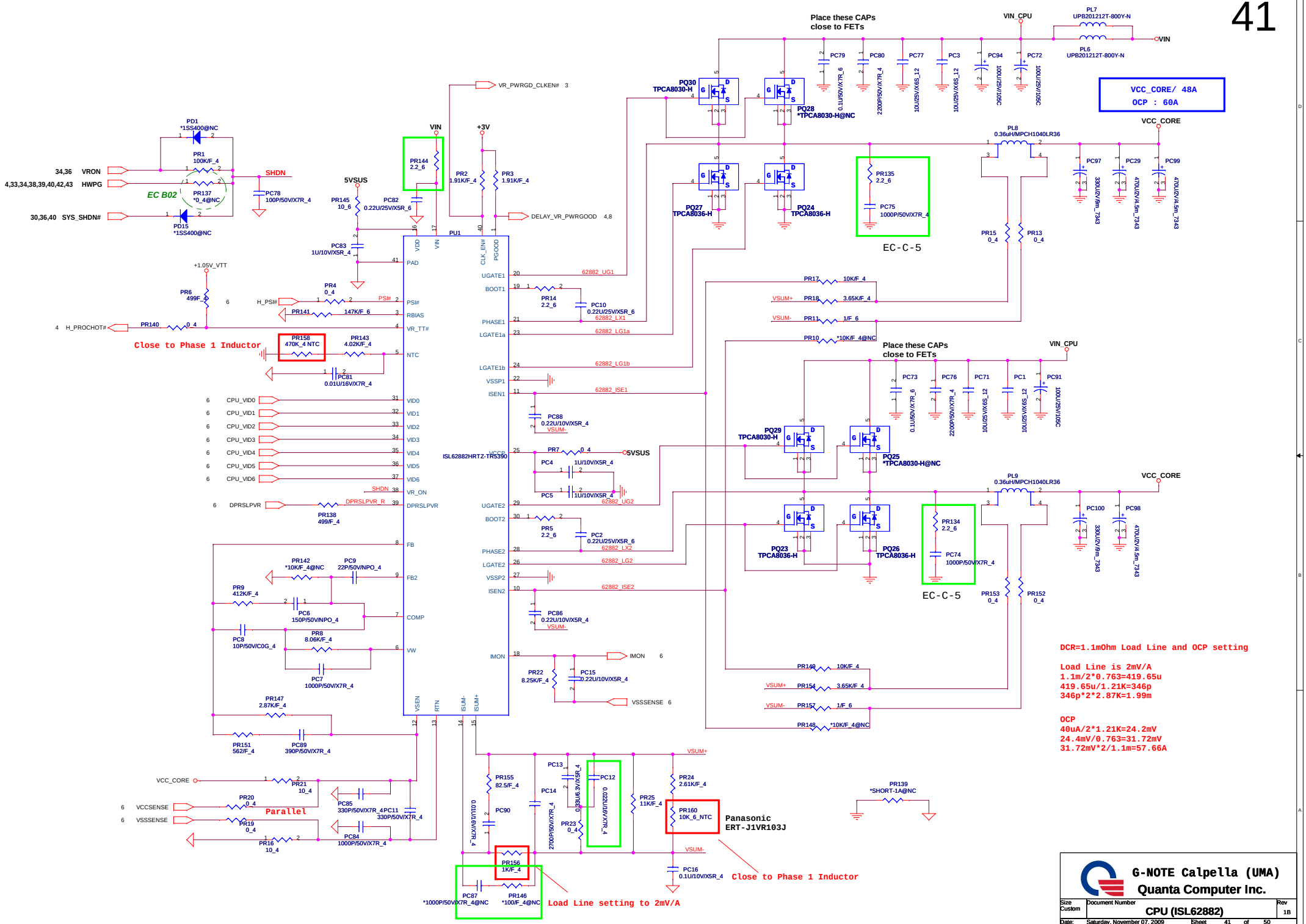

G-NOTE Calpella (UMA) Quanta Computer Inc.			
Size: Custom	Document Number: CPU (ISL62882)		Rev: 1B
Date: Saturday, November 07, 2009	Sheet 41 of 50		

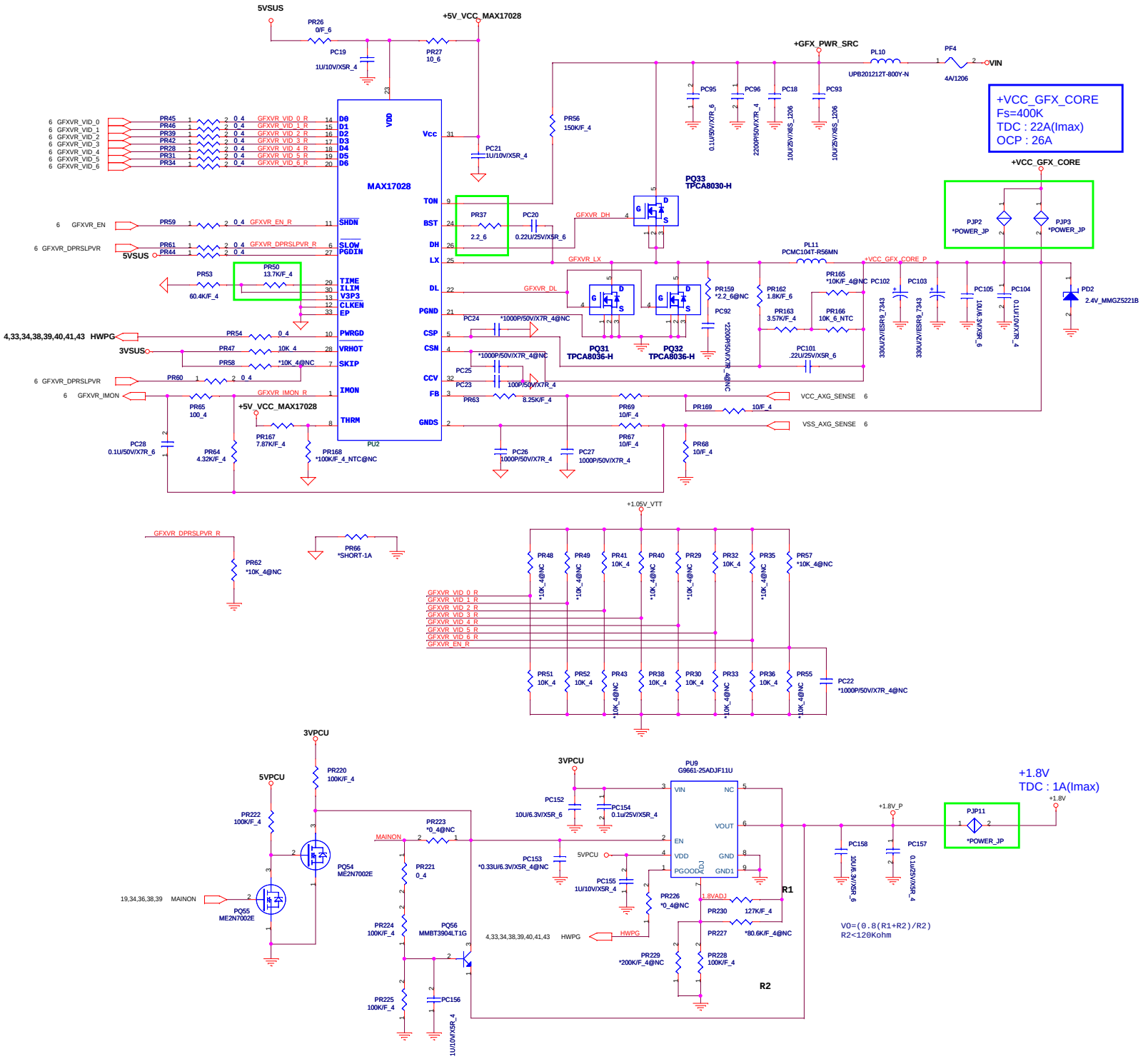
+VCC_GFX_CORE
Fs=400K
TDC : 22A(Imax)
OCP : 26A
MAX17028
PU2
PQ31 TPCA8036-H
PQ32 TPCA8036-H
PQ33 TPCA8030-H
+1.8V
TDC : 1A(Imax)
VO=(0.8(R1+R2)/R2)
R2<120Kohm
PU9 G9661-25ADJF11U
PQ54 ME2N7002E
PQ55 ME2N7002E
PQ56 MMBT3904LT1G
G-NOTE Calpella (UMA)
Quanta Computer Inc.
GFX_VCC (MAX17028)
Saturday, November 07, 2009

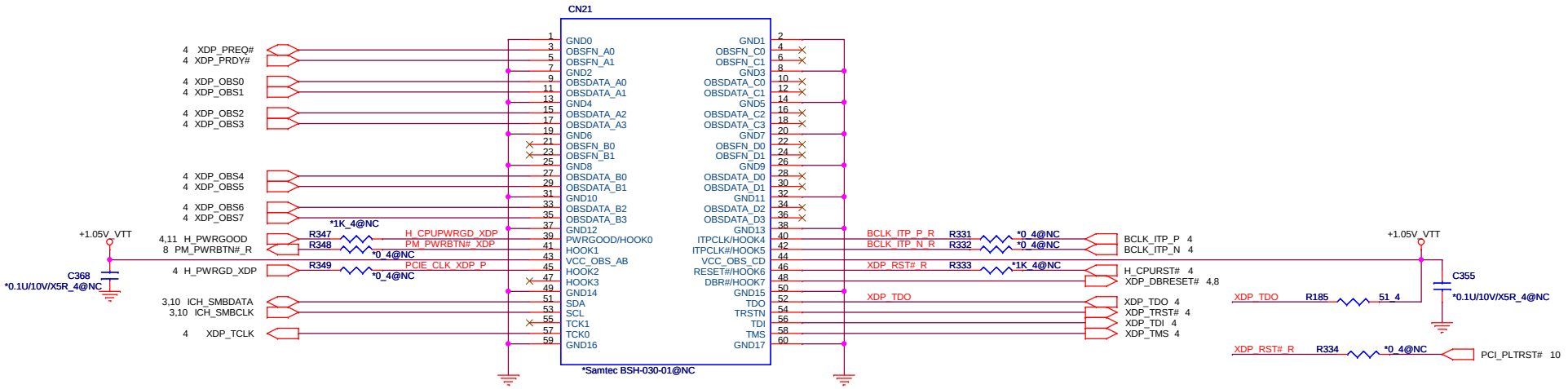

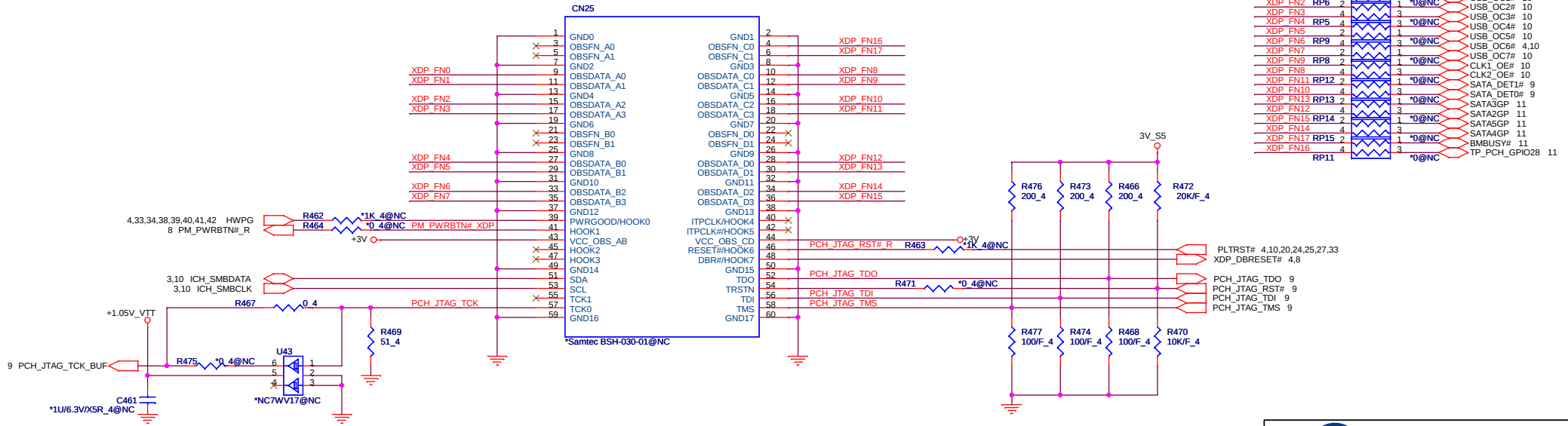

LD-Note Calpella UMA
Quanta Computer Inc.

Size	Document Number	Rev
Custom	XDP & PCH JTAG	
Date: Saturday, November 07, 2009	Sheet 43 of 50	

Revision History

Revision	Date	Phase	Change List	Release Schematic Date	Release Gerber File Date
1A		DV	Initial release		

Schematic Value Explanation Description :

RESISTOR

Value	F	4	6	8	12	1210	*	Description
*1K/F_4	1%	0402 (1005)					DE POP	1K ohm 1% SMD 0402 package and DE POP
1K_6	5%		0603 (1608)				POP	1K ohm 5% SMD 0603 package and POP
1K_8	5%			0805 (2125)			POP	1K ohm 5% SMD 0805 package and POP
1K_12	5%				1206 (3216)		POP	1K ohm 5% SMD 1206 package and POP
1K_1210	5%					1210 (3225)	POP	1K ohm 5% SMD 1210 package and POP

CAPACITOR

Value	Voltage	Material	6				*	Description
*0.1U/10V/X5R_4	10V	X5R	0402 (1005)				DE POP	0.1UF 10V X5R SMD 0402 package DE POP
1U/25V/X7R_6	25V	X7R	0603 (1608)				POP	0.1UF 25V X7R SMD 0603 package POP

G NOTE SKU TABLE

Location					

G NOTE SKU TABLE

Location					Page

LD-Note Calpella UMA
Quanta Computer Inc.

Size	Document Number	Rev
Custom	BOM Matrix Table	

Date: Saturday, November 07, 2009 Sheet 45 of 50

EC NO.	Page	Date	Part reference	Description
EC-C-1	23 22 27 20	10/30	CML3,CML4,R493/R494/R495/R496 CML1,R38,R39 L26,R178,R179 U12	POP CML1/CML3/CML4 for EMI Suggestion U12 Only use DBBL5MLAN01
EC-C-2	19	10/30	Q35,Q40,Q41	Q40 change to BA001440Z87 Q35 change to BAM70020058 Q41 change to BA039040ZA9
EC-C-3	10	10/30	U38	Modify Card Reader PORT
EC-C-4	35	10/30	HOLE11,HOLE3,HOLE21	Change footprint
EC-C-5	41	10/30	PR134,PR135,PC74,PC75	POP and PC74,PC75 change to 1000PF
EC-C-6	19	11/02	L17,C34,U15,C24,C39,C40	L17:DEPOP;C34,U15,C24,C39,C40:POP feedbacks from RealTek about audio issue
EC-C-7	22	11/02	U41	Modify Enable Pin connect to AOU_USB_ON# for AOU3 functon and delete cell select function
EC-C-8	18	11/02	CN17	Modify CRTVSYNC,CRTHSYNC,DDCCLK3,DDCDAT3
EC-C-9	30	11/02	Q24,Q28,Q20,C381,C382,C383, U36,C389,R356,R357,Q25,Q26,Q27	DEPOP
EC-C-10	38	11/02	PR206,PR279,PQ82	PR206:DEPOP PR279,PQ82:POP

EC NO.	Page	Date	Part reference	Description
EC-C-11	37	11/02		From a field issue, Lenovo system needs to have battery sense function. MBATV shall be connected to ADC1/GPI1@KBC.
EC-C-12	33	11/02	U37	Change iTPM Power to 3V_S5
EC-C-13	22	11/02	U52	Change to MAX14550AEETB+
EC-C-14	8	11/02	R447	PCIE_WAKE# Pull high Resistor change to 10K
EC-C-15	30	11/03	R350	R350 change to 11.2K
EC-C-16	18	11/04	C347	Modify to CRT_VCC_R
EC-C-17	19	11/05	U11,R628,R629,C673,R630,R450	Chip Change version to ALC269Q-VA6 POP:R628,R630,R450 DEPOP:R629,C673
EC-C-18	33	11/05	U37	Change Part to 4M bytes Material
EC-C-19	08-13	11/06	U38	Change footprint
EC-C-20	10	11/06	R444	Add part

EC NO.	Page	Date	Part reference	Description
EC-C-21		11/06	TP49、TP44、TP73、TP16、TP6、TP93 & TP98 TP112、TP99、TP32、TP47、TP34、TP101、TP103	Change footprint to TP3050

LD-Note Calpella UMA
Quanta Computer Inc.

Size	Document Number	Rev
Custom	EC list 2	
Date: Saturday, November 07, 2009	Sheet 48 of 50	

USB Port	Device	PM55 Support	HM55 Support	DV-Stage(UMA)	DV-Stage(Discrete)
Port0	USB Port	V	V	HM55	HM55
Port1	USB Port	V	V	HM55	HM55
Port2	New Card	V	V	HM55	HM55
Port3	Camera	V	V	HM55	HM55
Port4	WLAN	V	V	HM55	HM55
Port5	WWAN	V	V	HM55	HM55
Port6	Card Reader	V	X	HM55	HM55
Port7	NC	V	X	HM55	HM55
Port8	USB Port	V	V	HM55	HM55
Port9	USB Port	V	V	HM55	HM55
Port10	Fingerprint	V	V	HM55	HM55
Port11	NC	V	V	HM55	HM55
Port12	NC	V	V	HM55	HM55
Port13	Bluetooth	V	V	HM55	HM55