LL5A Intel Calpella Platform with Discrete GFX

01

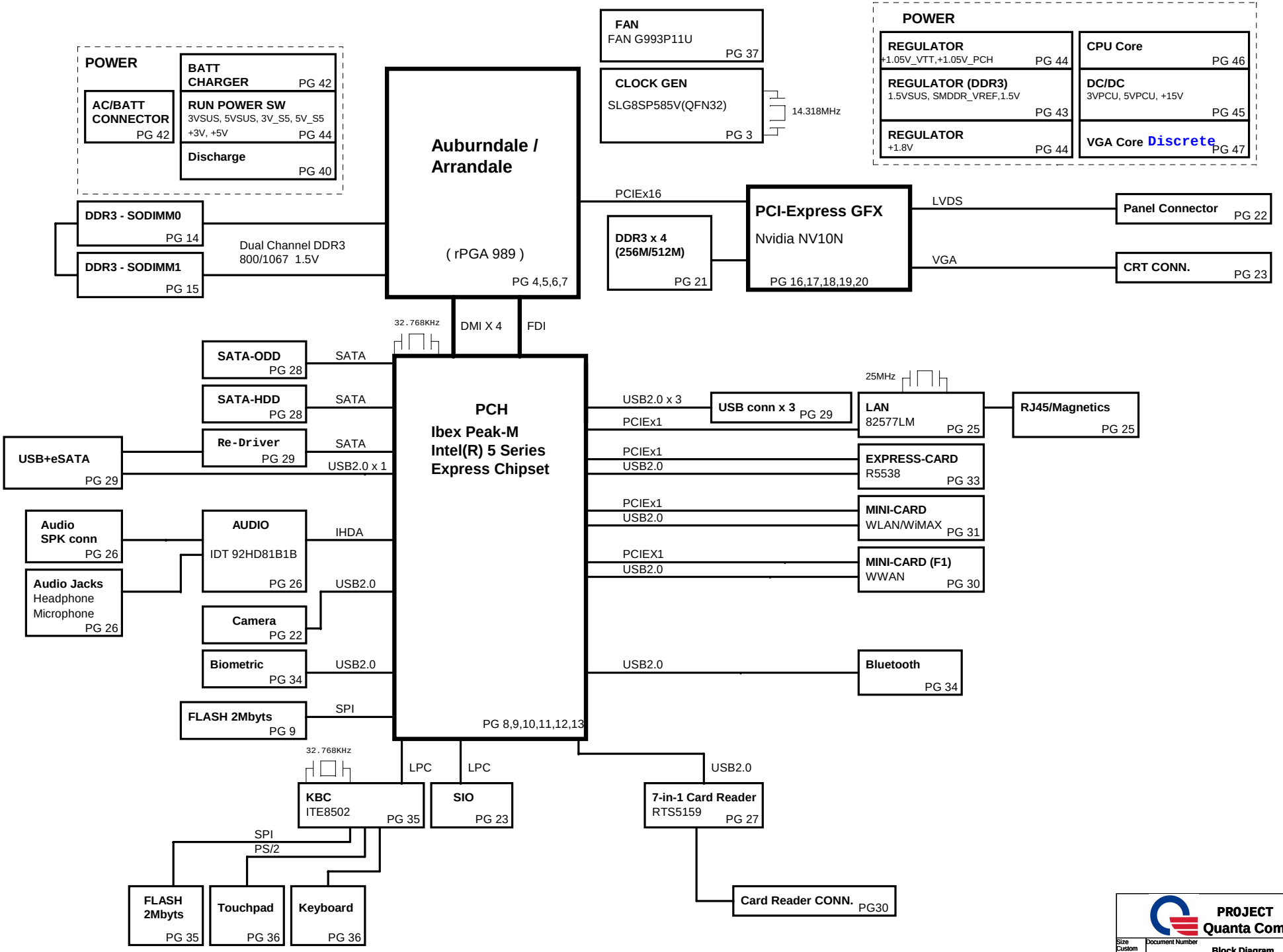

PROJECT : LL5A
Quanta Computer Inc.

Size	Document Number	Rev
Custom	Block Diagram	1B
Date: Tuesday, October 20, 2009	Sheet 1 of 43	

Table of Contents

PAGE	DESCRIPTION
1	Schematic Block Diagram
2	Front Page
3	CLOCK GENERATOR
4-7	Auburndale CPU
8-13	Ibex Peak-M
14-15	DDRIII SO-DIMM
16-22	Discreate VGA (M92-XT)
23	LCD + Camera Conn.
24	HDMI Conn.
25	CRT Conn.
26	Audio Codec ALC269
27	RTL8111DL
28	SATA HDD & ODD
29	USB x 2 & ESATA
30	USB X2/SIM_CARD/LEDs/RF
31	MINI-Card (UWB & WWAN)
32	MINI-Card (WLAN)
33	ONFI
34	Express Card
35	K/B & T/P
36	BLUETOOTH
37	FAN & Thermal
38	G-Sensor
39	B To B Conn.
40	iTPM & RFID EEPROM
41	KBC IT8502E
42	HOLD & SKEW
43	Discharge
44	Charger
45	DDR3 (TPS5116REGR)
46	1.05V_VTT & 1.05_PCH (RT8204)
47	3V/5V (MAX17101)
48	CPU (MAX17082)
49	DIS_GFX_VCC (MAX8792)
50	DIS_1.8V_RUN (OZ8116LN)
51	Power Block Dianram
52	XDP
53	Revision & Schematic Value Description
54	BOM Matrix Table

Power States

POWER PLANE	VOLTAGE	PAGE	DESCRIPTION	CONTROL SIGNAL	ACTIVE IN
VIN	10V~+20V	23,32,43,44,45,46,47,48,49,50	MAIN POWER		S0~S5
+3VRTC	+3.0V~+3.3V	9,12,41	RTC		S0~S5
3VPCU	+3.3V	9,23,27,30,32,35,39,41,43,44,47	ITE8052 POWER	3V5V_EN	S0~S5
5VPCU	+5V	14,43,44,45,46,47,49,50	DC/DC POWER IC SOURCE	3V5V_EN	S0~S5
+15V	+15V	23,38,43,45,46,47	LARGE POWER	3V5V_EN	S0~S5
LANVCC	+3.3V	27,43	LAN POWER	LAN_ON	
5V_S5	+5V	12,29,30,43	PCH SUS POWER	S5_ON	S0~S3
3V_S5	+3.3V	8,9,10,11,12,43,52	Sys Management,PCH Resume Well,Intel HD Audio,USB,WLAN WiMAX POWER	S5_ON	S0~S3
5VSUS	+5V	23,39,43,48	SLP_S4# CTRLD POWER	SUSON	S0~S3
3VSUS	+3.3V	14,15,30,34,41,43,49	SLP_S4# CTRLD POWER	SUSON	S0~S3
1.5VSUS	+1.5V	4,6,14,15,43,45,46,49,50	SODIMM POWER	SUSON	S0~S3
0.75VSMDDR_VTERM	+0.75V	14,15,43,45	DDR3 SODIMM REFERENCE POWER	MAIN_ON	S0
+5V	+5V	12,18,23,24,25,26,28,35,37,41,43,44	SLP_S3# CTRLD POWER	MAIN_ON	S0
+3V	+3.3V	3,4,8,9,10,11,12,14,15,17,23,25,26,27,28,29,30,31,32,33,34,36,37,38,39,40,41,43,44,45,46,47,48,50,52	SLP_S3# CTRLD POWER	MAIN_ON	S0
+1.8V	+1.8V	6,12,17,18,21,22,33,43,50	LVDS,NVM POWER	MAIN_ON	S0
+1.5V	+1.5V	12,18,19,20,31,32,34,45,46	Mini PCIe,Express Card POWER	MAIN_ON	S0
+1.05V_VTT	+1.05V	4,6,11,12,43,46,48,52	AuBurndale VTT POWER	MAIN_ON	S0
+1.05V_PCH	+1.05V	3,10,12,43,46,52	PCH CORE POWER	1.05V_RUN_ON	S0
+VCC_GFX_CORE	+0.9V~+1.2V	18,21,43,49	VGA CORE POWER	GFXVR_EN	S0
VCC_CORE		6,43,48	CPU CORE POWER	VRON	S0
LCDVCC	+3.3V	23	LCD Power	ENVDD	S0
+5V_ODD	+5V	28	ODD Power	MAIN_ON	S0
+5V_HDD	+5V	28	HDD Power	MAIN_ON	S0
BAT-V	+10V~+17V	44	MAIN BATTERY	CHG_PBATT	S0~S5

PROJECT : LL5A
Quanta Computer Inc.

Size	Document Number	Rev
A3	FRONTPAGE	1B
Date: Tuesday, October 20, 2009	Sheet 2 of 43	

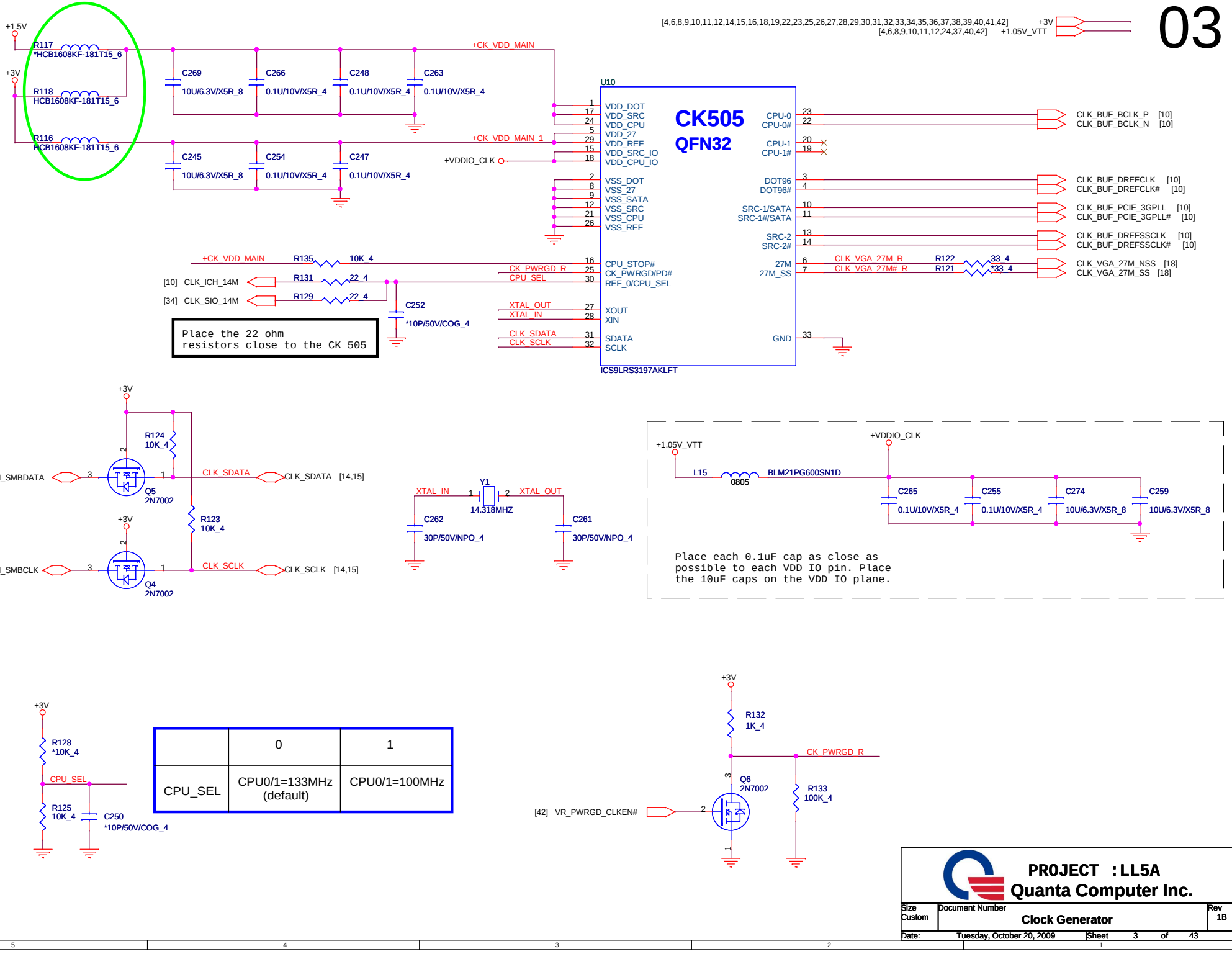

	0	1
CPU_SEL	CPU0/1=133MHz (default)	CPU0/1=100MHz

PROJECT : LL5A
Quanta Computer Inc.

Size	Document Number	Rev
Custom	Clock Generator	1B
Date: Tuesday, October 20, 2009	Sheet 3 of 43	

[3,6,8,9,10,11,12,14,15,16,18,19,22,23,25,26,27,28,29,30,31,32,33,34,35,36,37,38,39,40,41,42] +3V
[3,6,8,9,10,11,12,24,37,40,42] +1.05V_VTT
[14,15,37,39,43] 1.5VSUS

U23A

DMI
DMI_TXN0 A24 DMI_RX#[0]
DMI_TXN1 C23 DMI_RX#[1]
DMI_TXN2 B22 DMI_RX#[2]
DMI_TXN3 A21 DMI_RX#[3]
DMI_TXP0 B24 DMI_RX[0]
DMI_TXP1 D23 DMI_RX[1]
DMI_TXP2 B23 DMI_RX[2]
DMI_TXP3 A22 DMI_RX[3]
DMI_RXN0 D24 DMI_TX#[0]
DMI_RXN1 G24 DMI_TX#[1]
DMI_RXN2 F23 DMI_TX#[2]
DMI_RXN3 H23 DMI_TX#[3]
DMI_RXP0 D25 DMI_TX[0]
DMI_RXP1 F24 DMI_TX[1]
DMI_RXP2 E23 DMI_TX[2]
DMI_RXP3 G23 DMI_TX[3]

PCI EXPRESS -- GRAPHICS
FDI_TX#[0] E22
FDI_TX#[1] D21
FDI_TX#[2] D19
FDI_TX#[3] D18
FDI_TX#[4] G21
FDI_TX#[5] E19
FDI_TX#[6] F21
FDI_TX#[7] G18
FDI_TX[0] D22
FDI_TX[1] C21
FDI_TX[2] D20
FDI_TX[3] C18
FDI_TX[4] G22
FDI_TX[5] E20
FDI_TX[6] F20
FDI_TX[7] G19
FDI_FSYNC F17 FDI_FSYNC[0]
FDI_FSYNC E17 FDI_FSYNC[1]
FDI_INT C17 FDI_INT
FDI_FSYNC F18 FDI_LSYNC[0]
FDI_FSYNC D17 FDI_LSYNC[1]

IC,AUB_CFD_rPGA,R0P9

PEG_ICOMPI B26
PEG_ICOMPO A26
PEG_RCOMPO B27
PEG_RBIAS A25
R337 49.9/F_4
R336 750/F_4
PEG_RXN[0..15] [16]
PEG_RX#[0] K35 PEG_RXN15
PEG_RX#[1] J34 PEG_RXN14
PEG_RX#[2] J33 PEG_RXN13
PEG_RX#[3] G35 PEG_RXN12
PEG_RX#[4] G32 PEG_RXN11
PEG_RX#[5] F34 PEG_RXN10
PEG_RX#[6] F31 PEG_RXN9
PEG_RX#[7] D35 PEG_RXN8
PEG_RX#[8] E33 PEG_RXN7
PEG_RX#[9] C33 PEG_RXN6
PEG_RX#[10] D32 PEG_RXN5
PEG_RX#[11] B32 PEG_RXN4
PEG_RX#[12] C31 PEG_RXN3
PEG_RX#[13] B28 PEG_RXN2
PEG_RX#[14] B30 PEG_RXN1
PEG_RX#[15] A31 PEG_RXN0
PEG_RXP[0..15] [16]
PEG_RX[0] J35 PEG_RXP15
PEG_RX[1] H34 PEG_RXP14
PEG_RX[2] H33 PEG_RXP13
PEG_RX[3] F35 PEG_RXP12
PEG_RX[4] G33 PEG_RXP11
PEG_RX[5] E34 PEG_RXP10
PEG_RX[6] F32 PEG_RXP9
PEG_RX[7] D34 PEG_RXP8
PEG_RX[8] F33 PEG_RXP7
PEG_RX[9] B33 PEG_RXP6
PEG_RX[10] D31 PEG_RXP5
PEG_RX[11] A32 PEG_RXP4
PEG_RX[12] C30 PEG_RXP3
PEG_RX[13] A28 PEG_RXP2
PEG_RX[14] B29 PEG_RXP1
PEG_RX[15] A30 PEG_RXP0
PEG_TXN[0..15] [16]
PEG_TX#[0] L33 PEG_C_TXN15
PEG_TX#[1] M35 PEG_C_TXN14
PEG_TX#[2] M33 PEG_C_TXN13
PEG_TX#[3] M30 PEG_C_TXN12
PEG_TX#[4] L31 PEG_C_TXN11
PEG_TX#[5] K32 PEG_C_TXN10
PEG_TX#[6] M29 PEG_C_TXN9
PEG_TX#[7] J31 PEG_C_TXN8
PEG_TX#[8] K29 PEG_C_TXN7
PEG_TX#[9] H30 PEG_C_TXN6
PEG_TX#[10] H29 PEG_C_TXN5
PEG_TX#[11] F29 PEG_C_TXN4
PEG_TX#[12] E28 PEG_C_TXN3
PEG_TX#[13] D29 PEG_C_TXN2
PEG_TX#[14] D27 PEG_C_TXN1
PEG_TX#[15] C26 PEG_C_TXN0
PEG_TXP[0..15] [16]
PEG_TX[0] L34 PEG_C_TXP15
PEG_TX[1] M34 PEG_C_TXP14
PEG_TX[2] M32 PEG_C_TXP13
PEG_TX[3] L30 PEG_C_TXP12
PEG_TX[4] M31 PEG_C_TXP11
PEG_TX[5] K31 PEG_C_TXP10
PEG_TX[6] M28 PEG_C_TXP9
PEG_TX[7] H31 PEG_C_TXP8
PEG_TX[8] K28 PEG_C_TXP7
PEG_TX[9] G30 PEG_C_TXP6
PEG_TX[10] G29 PEG_C_TXP5
PEG_TX[11] F28 PEG_C_TXP4
PEG_TX[12] E27 PEG_C_TXP3
PEG_TX[13] D28 PEG_C_TXP2
PEG_TX[14] C27 PEG_C_TXP1
PEG_TX[15] C25 PEG_C_TXP0

U23B

MISC
H_COMP3 AT23 COMP3
H_COMP2 AT24 COMP2
H_COMP1 G16 COMP1
H_COMP0 AT26 COMP0
TP3 TP_SKTOCC# AH24 SKTOCC#

CLOCKS
BCLK A16 CLK_CPU_BCLK [11]
BCLK# B16 CLK_CPU_BCLK# [11]
BCLK_ITP AR30 TP47
BCLK_ITP# AT30 TP46
PEG_CLK E16 CLK_PCIE_3GPLL [10]
PEG_CLK# D16 CLK_PCIE_3GPLL# [10]
DPLL_REF_SSCLK A18
DPLL_REF_SSCLK# A17

THERMAL
H_CATERR# AK14 CATERR#
[11] H_PECI AT15 PECI
[42] H_PROCHOT# AN26 PROCHOT#
[11] PM_THRMTRIP# AK15 THERMTRIP#

DDR3 MISC
SM_DRAMRST# F6 CPUDRAMRST#
SM_RCOMP[0] AL1 SM_RCOMP_0
SM_RCOMP[1] AM1 SM_RCOMP_1
SM_RCOMP[2] AN1 SM_RCOMP_2
PM_EXT_TS#[0] AN15
PM_EXT_TS#[1] AP15
+1.05V_VTT
R67 10K_4
R66 10K_4
R76 *0_4 short
R75 *0_4 short
PM_EXTTS#0 [14,15]
PM_EXTTS#1 [15]

PWR MANAGEMENT
TP4 H_CPURST# AP26 RESET_OBS#
[8] PM_SYNC AL15 PM_SYNC
SYS_AGENT_PWROK AN14 VCCPWRGOOD_1
AN27 VCCPWRGOOD_0
TP5 [8] PM_DRAM_PWRGD AK13 SM_DRAMPWROK
H_VTTPWRGD AM15 VTTPWRGOOD
TP9 H_PWRGD_XDP AM26 TAPPWRGOOD
[10,16,24,29,30,31,34] PLTRST# R71 1.5K/F_4 AL14 RSTIN#
R59 750/F_4

JTAG & BPM
PRDY# AT28 XDP_PRDY# TP45
PREQ# AP27 XDP_PREQ# TP8
TCK AN28 XDP_TCLK TP6
TMS AP28 XDP_TMS TP7
TRST# AT27 XDP_TRST# TP50
TDI AT29 XDP_TDI_R TP49
TDO AR27 XDP_TDO_R TP48
TDI_M AR29 XDP_TDI_M TP51
TDO_M AP29 XDP_TDO_M TP53
DBR# AN25 XDP_DBRESET# [8]
BPM#[0] AJ22 TP16
BPM#[1] AK22 TP13
BPM#[2] AK24 TP15
BPM#[3] AJ24 TP11
BPM#[4] AJ25 TP12
BPM#[5] AH22 TP14
BPM#[6] AK23 TP10
BPM#[7] AH23 TP17

IC,AUB_CFD_rPGA,R0P9

R6 1K_4 FDI_INT
R7 1K_4 FDI_FSYNC

3V_S5
R560 8.2K_4
C647 0.1U/10V/X7R_4
+1.5VCPU_PG
U36 74AHCT1G08GW
DRAMPWRGD_CPU
R561 1.5K/F_4
+1.5VCPU
R69 *1.1K/F_4
PM_DRAM_PWRGD
R527 750/F_4

1.5VSUS
R558 1K_4
R559 *0_4
CPUDRAMRST#
Q31 ME2N7002E
DDR3_DRAMRST# [14,15]
R563 100K_4
R562 *0_4
DRAMRST_CTRL_EC [33]
R564 *0_4 short
DRAMRST_CTRL_PCH [11]
C648 470p/50V_4

[8,42] DELAY_VR_PWRGOOD R73 *0_4 SYS_AGENT_PWROK
[11] H_PWRGOOD R78 *0_4 short

+3V
[33,39,40,41,42,43] HWPG
U3 74AHCT1G08GW
R70 2K/F_4 H_VTTPWRGRD
R58 1K_4

For Calpella S3 power reduction
3V_S5
R565 10K_4
R566 10K_4
+1.5VCPU_PG
+1.5VCPU_PG [39]
Q32 MMBT3904
R567 10K_4
Q33 PDTC143TT
C649 1U/6.3V/X5R_4

+1.05V_VTT
XDP_TMS R81 *51_4
XDP_TDI_R R409 *51_4
XDP_PREQ# R82 *51_4
XDP_TDO_M R421 51_4
XDP_TCLK R63 *51_4

XDP_TDI_R R408 *0_4
XDP_TDO_M R419 *0_4
R403 *0_4 short
XDP_TDI_M R420 *0_4
XDP_TDO_R R407 *0_4
XDP_TRST# R402 51_4

+1.05V_VTT
R44 49.9/F_4
R64 68_4
R83 *68_4
H_CATERR#
H_PROCHOT#
H_CPURST#

H_COMP0
H_COMP1
H_COMP2
H_COMP3
R406 49.9/F_4
R8 49.9/F_4
R405 20/F_4
R404 20/F_4

SM_RCOMP_2
SM_RCOMP_1
SM_RCOMP_0
R394 130/F_4
R393 24.9/F_4
R392 100/F_4

PEG_C_TXP15 C519 0.1U/10V/X5R_4 PEG_TXP15
PEG_C_TXP14 C516 0.1U/10V/X5R_4 PEG_TXP14
PEG_C_TXP13 C514 0.1U/10V/X5R_4 PEG_TXP13
PEG_C_TXP12 C512 0.1U/10V/X5R_4 PEG_TXP12
PEG_C_TXP11 C503 0.1U/10V/X5R_4 PEG_TXP11
PEG_C_TXP10 C501 0.1U/10V/X5R_4 PEG_TXP10
PEG_C_TXP9 C495 0.1U/10V/X5R_4 PEG_TXP9
PEG_C_TXP8 C494 0.1U/10V/X5R_4 PEG_TXP8
PEG_C_TXP7 C485 0.1U/10V/X5R_4 PEG_TXP7
PEG_C_TXP6 C480 0.1U/10V/X5R_4 PEG_TXP6
PEG_C_TXP5 C474 0.1U/10V/X5R_4 PEG_TXP5
PEG_C_TXP4 C467 0.1U/10V/X5R_4 PEG_TXP4
PEG_C_TXP3 C462 0.1U/10V/X5R_4 PEG_TXP3
PEG_C_TXP2 C458 0.1U/10V/X5R_4 PEG_TXP2
PEG_C_TXP1 C449 0.1U/10V/X5R_4 PEG_TXP1
PEG_C_TXP0 C444 0.1U/10V/X5R_4 PEG_TXP0

PEG_C_TXN15 C520 0.1U/10V/X5R_4 PEG_TXN15
PEG_C_TXN14 C518 0.1U/10V/X5R_4 PEG_TXN14
PEG_C_TXN13 C515 0.1U/10V/X5R_4 PEG_TXN13
PEG_C_TXN12 C513 0.1U/10V/X5R_4 PEG_TXN12
PEG_C_TXN11 C509 0.1U/10V/X5R_4 PEG_TXN11
PEG_C_TXN10 C502 0.1U/10V/X5R_4 PEG_TXN10
PEG_C_TXN9 C498 0.1U/10V/X5R_4 PEG_TXN9
PEG_C_TXN8 C489 0.1U/10V/X5R_4 PEG_TXN8
PEG_C_TXN7 C488 0.1U/10V/X5R_4 PEG_TXN7
PEG_C_TXN6 C484 0.1U/10V/X5R_4 PEG_TXN6
PEG_C_TXN5 C478 0.1U/10V/X5R_4 PEG_TXN5
PEG_C_TXN4 C469 0.1U/10V/X5R_4 PEG_TXN4
PEG_C_TXN3 C465 0.1U/10V/X5R_4 PEG_TXN3
PEG_C_TXN2 C461 0.1U/10V/X5R_4 PEG_TXN2
PEG_C_TXN1 C452 0.1U/10V/X5R_4 PEG_TXN1
PEG_C_TXN0 C447 0.1U/10V/X5R_4 PEG_TXN0

PROJECT : LL5A
Quanta Computer Inc.
Size: Custom
Document Number: PROCESSER 1/4(HOST&PCIE)
Rev: 1B
Date: Tuesday, October 20, 2009
Sheet 4 of 43

AUBURNDALE PROCESSOR (DDR3)

05

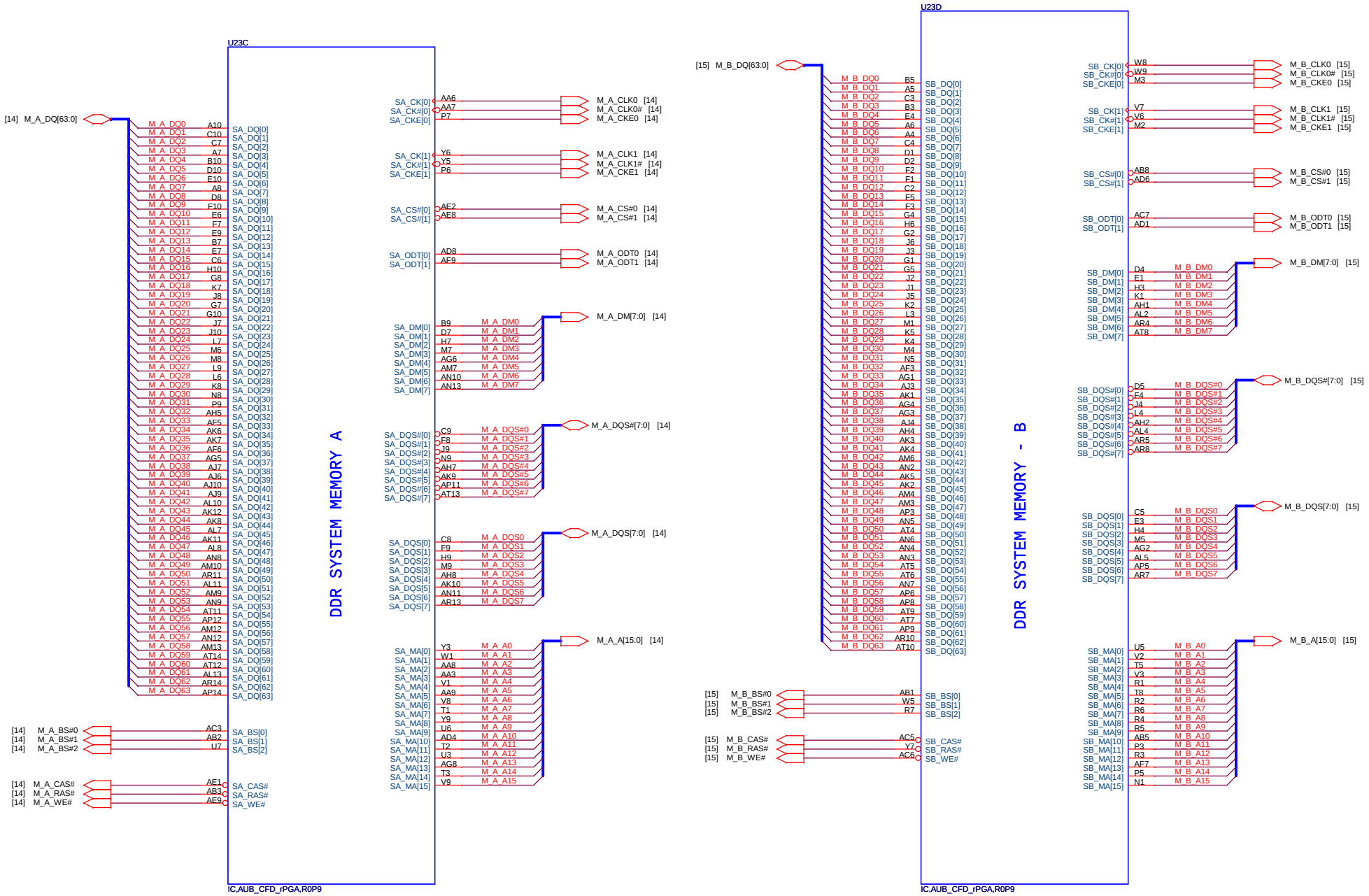

PROJECT : LL5A
Quanta Computer Inc.

Size	Document Number	Rev
Custom	PROCESSER 2/4(DDR)	1B

Date: Tuesday, October 20, 2009 Sheet 5 of 43

AUBURNDALE PROCESSOR (GRAPHICS POWER)

06

[37,42] VCC_CORE
[3,4,8,9,10,11,12,24,37,40,42] +1.05V_VTT
[4,14,15,37,39,43] 1.5VSUS
[10,12,18,36,37,40] +1.8V

U23F

VCC_CORE

1.1V RAIL POWER

CPU CORE SUPPLY

+1.05V_VTT

C428 10U/10V/X5R_8
C453 10U/10V/X5R_8
C493 10U/10V/X5R_8
C499 10U/10V/X5R_8
C475 10U/10V/X5R_8
C482 10U/10V/X5R_8
C457 *10U/10V/X5R_8
C463 *10U/10V/X5R_8
C427 10U/10V/X5R_8
C507 22U/6.3V/X5R_8
C114 22U/6.3V/X5R_8
C91 22U/6.3V/X5R_8

C131 22U/6.3V/X5R_8
C145 22U/6.3V/X5R_8

POWER

CPU VIDS

PSI# AN33 H_PSI# R

VID[0] AK35 CPU_VID0 CPU_VID0 [42]
VID[1] AK33 CPU_VID1 CPU_VID1 [42]
VID[2] AK34 CPU_VID2 CPU_VID2 [42]
VID[3] AL35 CPU_VID3 CPU_VID3 [42]
VID[4] AL33 CPU_VID4 CPU_VID4 [42]
VID[5] AM33 CPU_VID5 CPU_VID5 [42]
VID[6] AM35 CPU_VID6 CPU_VID6 [42]
PROC_DPRSLPVR AM34 DPRSLPVR DPRSLPVR [42]

VTT_SELECT G15 H_VTTVID1 TP1

SENSE LINES

ISENSE AN35 IMON [42]
VCC_SENSE AJ34 VCCSENSE [42]
VSS_SENSE AJ35 VSSSENSE [42]
VTT_SENSE B15 VTT_SENSE [40]
VSS_SENSE_VTT A15

R60 100/F_4
R61 100/F_4

IC,AUB_CFD_rPGA,R0P9

Lenovo Request

R430 *0_4
H_PSI# R
Q27 MMBT3906LT1G
R431 1K/F_4
H_PSI# [42]
[33] PSI_ON#
Q28 MMBT3904LT1G

U23G

SENSE LINES

VAXG_SENSE AR22
VSSAXG_SENSE AT22

GRAPHICS VIDS

GFX_VID[0] AM22
GFX_VID[1] AP22
GFX_VID[2] AN22
GFX_VID[3] AP23
GFX_VID[4] AM23
GFX_VID[5] AP24
GFX_VID[6] AN24

GFX_VR_EN AR25
GFX_DPRSLPVR AT25
GFX_IMON AM24 GFXVR_IMON R65 1K_4

GRAPHICS VAXG

POWER

FDI

PEG & DMI

DDR3 - 1.5V RAILS

+1.5VCPU

VDDQ1 AJ1
VDDQ2 AF1
VDDQ3 AE7
VDDQ4 AE4
VDDQ5 AC1
VDDQ6 AB7
VDDQ7 AB4
VDDQ8 Y1
VDDQ9 W7
VDDQ10 W4
VDDQ11 U1
VDDQ12 T7
VDDQ13 T4
VDDQ14 P1
VDDQ15 N7
VDDQ16 N4
VDDQ17 L1
VDDQ18 H1

C58 1U/6.3V/X5R_4
C124 1U/6.3V/X5R_4
C172 1U/6.3V/X5R_4
C90 1U/6.3V/X5R_4
C144 1U/6.3V/X5R_4
C59 22U/6.3V/X5R_8
C109 22U/6.3V/X5R_8
C83 *330u_2.5V_7343

+1.05V_VTT

C455 22U/6.3V/X5R_8
C56 22U/6.3V/X5R_8
C456 22U/6.3V/X5R_8
C55 22U/6.3V/X5R_8
C430 22U/6.3V/X5R_8
C429 22U/6.3V/X5R_8

1.1V

VTT0_59 P10
VTT0_60 N10
VTT0_61 L10
VTT0_62 K10

C73 10U/6.3V/X5R_6
C60 10U/6.3V/X5R_6

VTT1_63 J22
VTT1_64 J20
VTT1_65 J18
VTT1_66 H21
VTT1_67 H20
VTT1_68 H19

C454 22U/6.3V/X5R_8
C167 22U/6.3V/X5R_8

1.8V

VCCPLL1 L26
VCCPLL2 L27
VCCPLL3 M26

+1.8V

C61 1U/6.3V/X5R_4
C54 1U/6.3V/X5R_4
C51 2.2U/6.3V/X5R_6
C52 4.7U/6.3V/X5R_6
C405 22U/6.3V/X5R_8

IC,AUB_CFD_rPGA,R0P9

VCC_CORE

C472 C505 C491 C504 C166 C129 C89 — 22U/6.3V/X5R_8
C490 C130 C88 C165 C471 C492 C506 — 22U/6.3V/X5R_8 / 10U/6.3V/X5R_6
C473 C176 C140 C95 C133 C134 C164 — 10U/6.3V/X5R_6
C94 C72 C163 C127 C153 C162 C108 — 10U/6.3V/X5R_6
C93 0.1U/10V/X5R_4
C161 0.1U/10V/X5R_4

CPU thermal protection

+3V_THR
R371 *150_4
C479 *0.1U/10V/X5R_4
R386 *10K/F_4
U25 *MAX6509
VCC OT SET GND HYST
SYS_SHDN# [41,42]
R379 *1.74K/F_4
+3V

+1.05V_VTT

R428 1K_4
R84 1K_4
R423 1K_4
R427 *1K_4
R86 *1K_4
R96 1K_4
R426 *1K_4
R425 1K_4
R424 *1K_4

CPU_VID0
CPU_VID1
CPU_VID2
CPU_VID3
CPU_VID4
CPU_VID5
CPU_VID6
DPRSLPVR
H_PSI#

R415 *1K_4
R77 *1K_4
R410 *1K_4
R414 1K_4
R85 1K_4
R91 *1K_4
R413 1K_4
R412 *1K_4
R411 1K_4

PROJECT : LL5A
Quanta Computer Inc.

Size	Document Number	Rev
Custom	PROCESSER 3/4(POWER)	1B
Date: Tuesday, October 20, 2009	Sheet 6 of 43	

AUBURNDALE PROCESSOR (GND)

AUBURNDALE PROCESSOR(RESERVED, CFG)

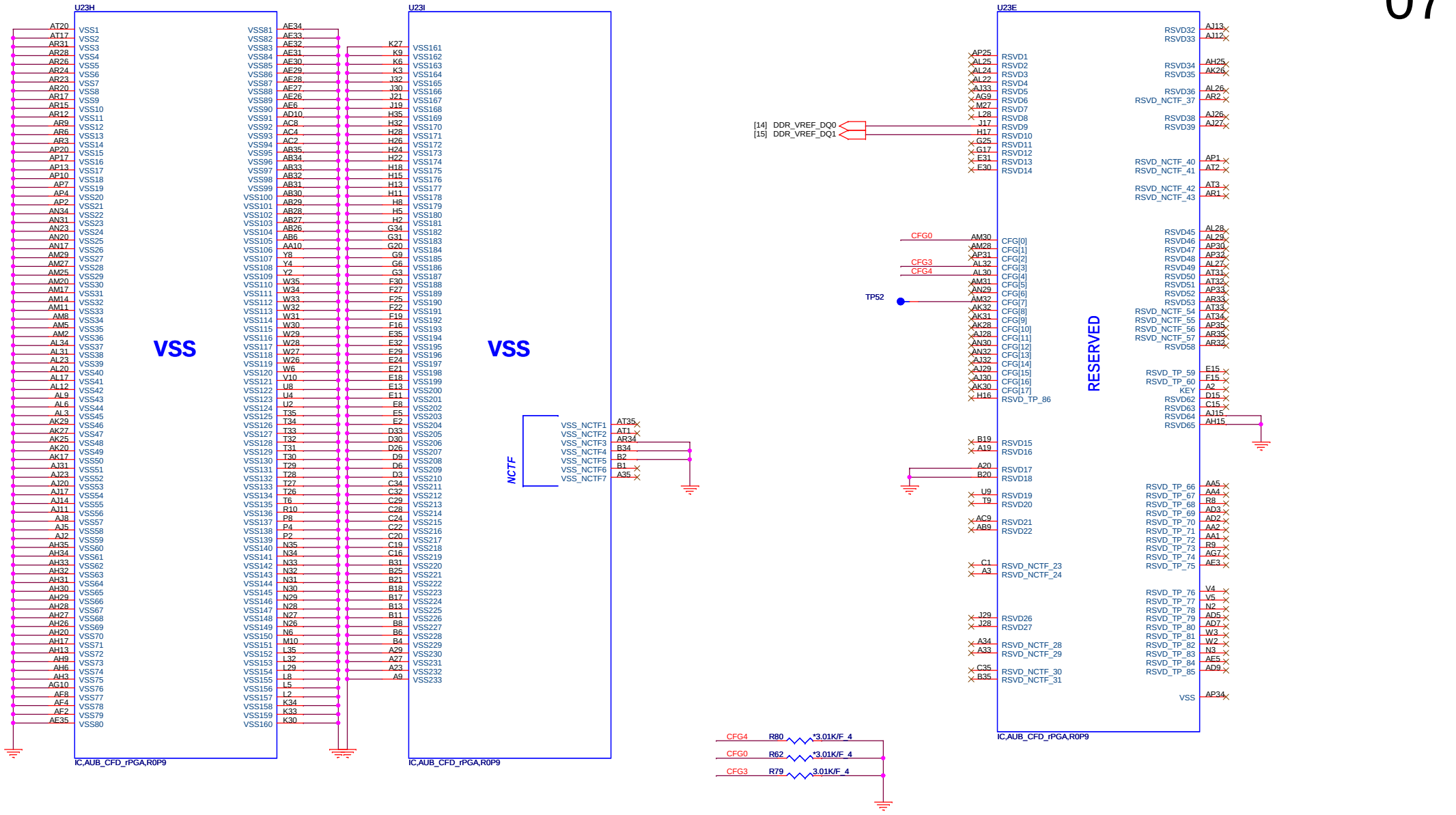

	1	0
CFG4 (Display Port Presence)	Disabled; No Physical Display Port attached to Embedded Diplay Port	Enabled; An external Display port device is connected to the Embedded Display port
CFG0 (PCI-Epress Configuration Select)	Single PEG	Bifurcation enabled
CFG3 (PCI-Epress Static Lane Reversal)	Normal Operation	Lane Numbers Reversed

PROJECT : LL5A
Quanta Computer Inc.

Size	Document Number	Rev
Custom	PROCESSER 4/4(GND)	1B
Date: Tuesday, October 20, 2009	Sheet 7 of 43	

IBEX PEAK-M (DMI,FDI,GPIO)

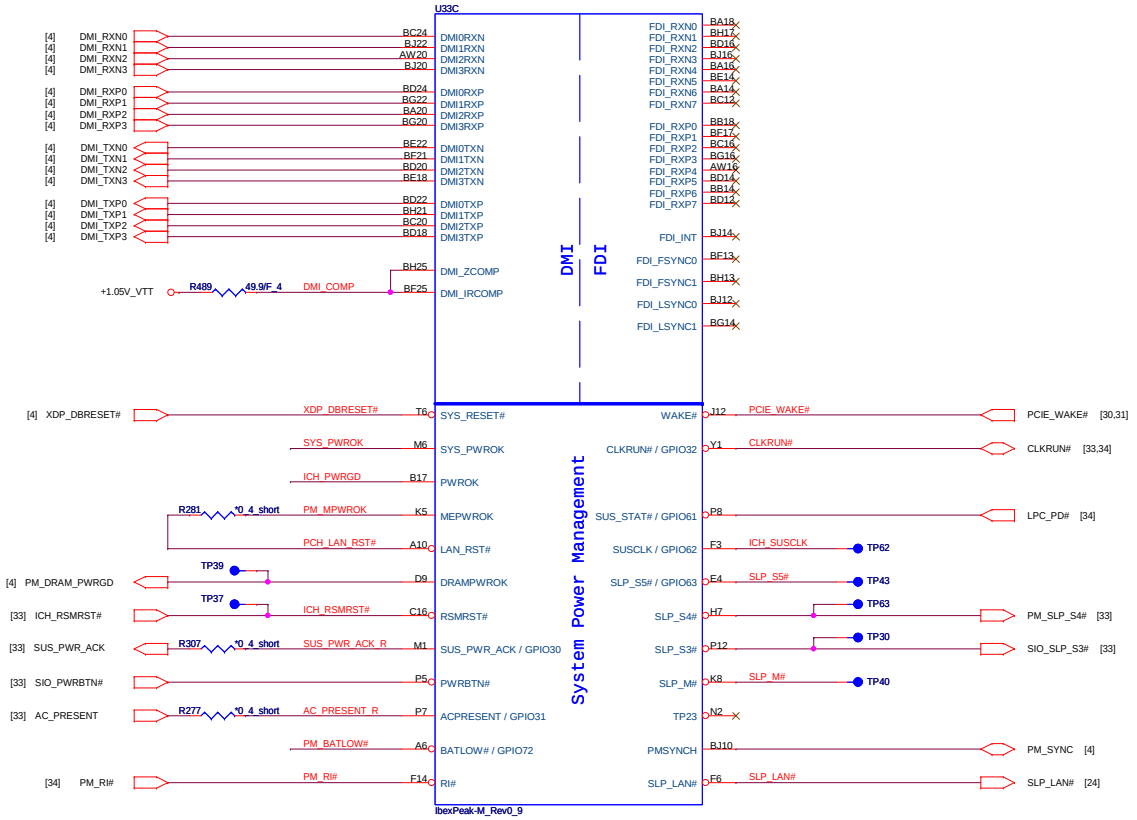

IBEX PEAK-M (LVDS,DDI)

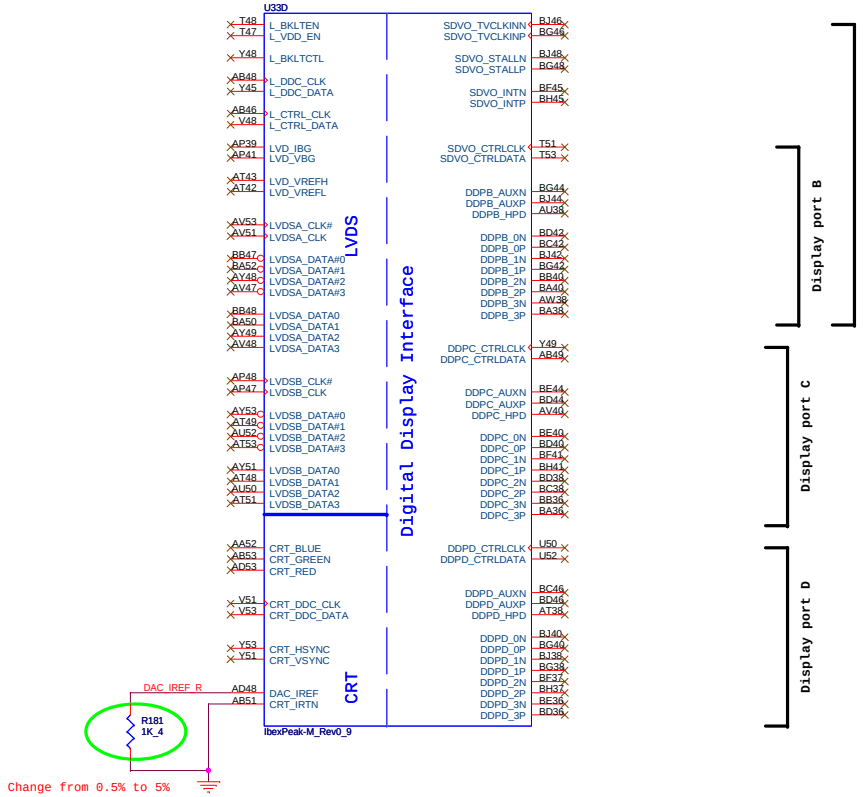

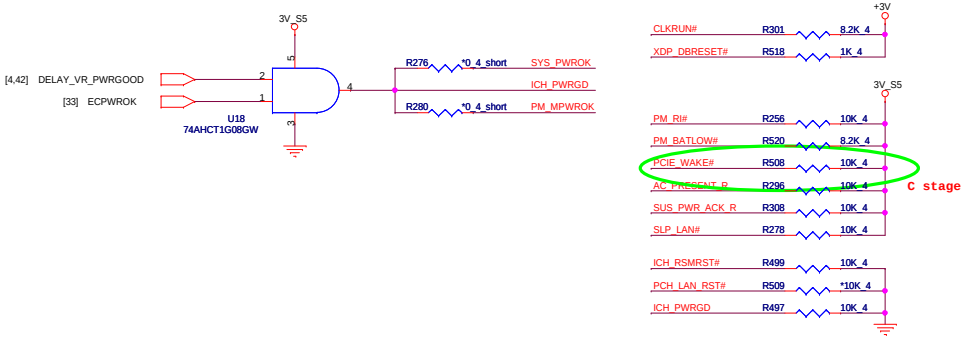

PROJECT : LL5A
Quanta Computer Inc.

Size	Document Number	Rev
Custom	PCH 1/6 (DMI&VIDEO)	1B
Date: Tuesday, October 20, 2009	Sheet 8 of 43	

[12,33] +3VRTC
[22,24,27,33,34,35,37,38,40,41,43] 3VPCU
[3,4,6,8,10,11,12,14,15,16,18,19,22,23,25,26,27,28,29,30,31,32,33,34,35,36,37,38,39,40,41,42] +3V
[4,8,10,11,12,24,30,37] 3V_S5
[3,4,6,8,10,11,12,24,37,40,42] +1.05V_VTT

RTC Circuitry

CMOS Settings	J5
Clear CMOS	1-2
Save CMOS	1-X (Default)

TPM Settings	J4
Clear ME RTC registers	1-2
Save ME RTC registers	1-X (Default)

3VPCU D7 RB500V-40 C638 1U/6.3V/X5R_4 +3VRTC
+3VRTC_2 D5 RB500V-40 R496 20K/F_4 R491 20K/F_4 C625 1U/6.3V/X5R_4 J2 SHORT_PAD1 C629 1U/6.3V/X5R_4 J1 SHORT_PAD1
R187 1K/F_4 R500 1M/F_4
+3VRTC_1 BT1 RTC_BAT
C637 15P/50V/NPO_4 C636 15P/50V/NPO_4 Y4 32.768KHZ R502 10M_4
Cap values depend on Xtal

5VPCU 20MIL 20MIL
R213 1.2K/F_6 VCCRTC_1 R218 1K/F_4 VCCRTC_3 Q12 MMBT3904
R209 4.7K_4
RTCGATE
R204 15K_4

INTVRMEN - Integrated SUS 1.1V VRM Enable
High - Enable Internal VRs

IBEX PEAK-M (HDA,JTAG,SATA)

U33A

RTC_X1 B13 RTCX1
RTC_X2 D13 RTCX2
RTC_RST# C14 RTCRST#
SRTC_RST# D17 SRTCRST#
SM_INTRUDER# A16 INTRUDER#
+3VRTC R501 330K_4 PCH_INVRMEN A14 INTVRMEN

RTC

FWH0 / LAD0 D33 LPC_LAD0 [30,33,34]
FWH1 / LAD1 B33 LPC_LAD1 [30,33,34]
FWH2 / LAD2 C32 LPC_LAD2 [30,33,34]
FWH3 / LAD3 A32 LPC_LAD3 [30,33,34]
FWH4 / LFRAME# C34 LPC_LFRAME# [30,33,34]
LDRQ0# A34 LPC_DRQ#0 [34]
LDRQ1# / GPIO23 E34 LCD_BK_OFF [22]
LCD_BK_OFF R205 10K_4 +3V
SERIRQ AB9 IRQ_SERIRQ [33,34]

LPC

ACZ_BIT_CLK A30 HDA_BCLK
ACZ_SYNC D29 HDA_SYNC
[25] SPKR P1 SPKR
ACZ_RST# C30 HDA_RST#
[25] ICH_AZ_CODEC_SDIN0 G30 HDA_SDIN0
TP35 F30 HDA_SDIN1
TP34 E32 HDA_SDIN2
TP32 F32 HDA_SDIN3
ACZ_SDOUT B29 HDA_SDO
R198 *1K_4 +3V
R199 *1K_4 HDA_DOCK_EN# H32 HDA_DOCK_EN# / GPIO33
3V_S5 R220 *10K_4 HDA_DOCK_RST# J30 HDA_DOCK_RST# / GPIO13

IHDA

SATA0RXN AK7 SATA_RX0- [27]
SATA0RXP AK6 SATA_RX0+ [27]
SATA0TXN AK11 SATA_TX0- [27]
SATA0TXP AK9 SATA_TX0+ [27]

SATA HDD

SATA1RXN AH6 SATA_RX1- [27]
SATA1RXP AH5 SATA_RX1+ [27]
SATA1TXN AH9 SATA_TX1- [27]
SATA1TXP AH8 SATA_TX1+ [27]

SATA ODD

SATA2RXN AF11
SATA2RXP AF9
SATA2TXN AF7
SATA2TXP AF6
SATA3RXN AH3
SATA3RXP AH1
SATA3TXN AF3
SATA3TXP AF1

SATA4RXN AD9 SATA_RX4- [28]
SATA4RXP AD8 SATA_RX4+ [28]
SATA4TXN AD6 SATA_TX4- [28]
SATA4TXP AD5 SATA_TX4+ [28]

E-SATA

SATA5RXN AD3
SATA5RXP AD1
SATA5TXN AB3
SATA5TXP AB1

SATA

TP57 PCH_JTAG_TCK_BUF M3 JTAG_TCK
TP60 PCH_JTAG_TMS K3 JTAG_TMS
TP59 PCH_JTAG_TDI K1 JTAG_TDI
TP64 PCH_JTAG_TDO J2 JTAG_TDO
TP58 PCH_JTAG_RST# J4 JTAG_RST#

JTAG

SATAICOMPO AF16
SATAICOMPI AF15 SATA_COMP R238 37.4/F_4 +1.05V_VTT

[33] SPI_CLK_R SPI_CLK_R BA2 SPI_CLK
[33] SPI_CS0#_R SPI_CS0#_R AV3 SPI_CS0#
TP41 SPI_CS1# AY3 SPI_CS1#
[33] SPI_SI_R SPI_SI_R AY1 SPI_MOSI
[33] SPI_SO SPI_SO AV1 SPI_MISO

SPI

SATALED# T3 R314 10K_4 +3V SATA_ACT# [35]
SATA0GP / GPIO21 Y9 MODEL_ID1 [11]
SATA1GP / GPIO19 V1 SIM_CARD_DET [29]
R291 10K_4 +3V

IbexPeak-M_Rev0_9

No Reboot Strap

+3V
Place near connector
R310 *1K_4 SPKR
R282 10K_4 IRQ_SERIRQ

[25] ICH_AZ_CODEC_BITCLK R483 33_4 ACZ_BIT_CLK
C621 22P/50V/NPO_4
[25] ICH_AZ_CODEC_SYNC R488 33_4 ACZ_SYNC
[25] ICH_AZ_CODEC_RST# R475 33_4 ACZ_RST#
[25] ICH_AZ_CODEC_SDOUT R486 33_4 ACZ_SDOUT

Place all series terms close to PCH except for SDIN input lines,which should be close to source.Placement of R773, R775, R776 & R777 should equal distance to the T split trace point. Basically, keep the same distance from T for all series termination resistors.

iTPM ENABLE/DISABLE

+3V R229 *1K_4 SPI_SI

TPM Function	R292
Enable	Stuff
Disable	NC (Default)

For ME F/W

16Mbit (2M Byte), SPI

+3V R493 3.3K_4
SPI_CS0#_R R503 15_4 SPI_CS0#
SPI_CLK_R R254 15_4 SPI_CLK
SPI_SI_R R237 15_4 SPI_SI
SPI_SO R504 15_4 SPI_SO_R
U34 W25X16AVSSIG
CE# SCK SI SO WP# VDD HOLD# VSS
C386 22P/50V/NPO_4
C384 0.1U/10V/X5R_4
+3V R258 10K_4

PROJECT : LL5A
Quanta Computer Inc.

Size	Document Number	Rev
Custom	PCH 2/6 (SATA&HDA&JTA)	1B
Date: Tuesday, October 20, 2009	Sheet 9 of 43	

IBEX PEAK-M (PCI,USB,NVRAM)

IBEX PEAK-M (PCI-E,SMBUS,CLK)

10

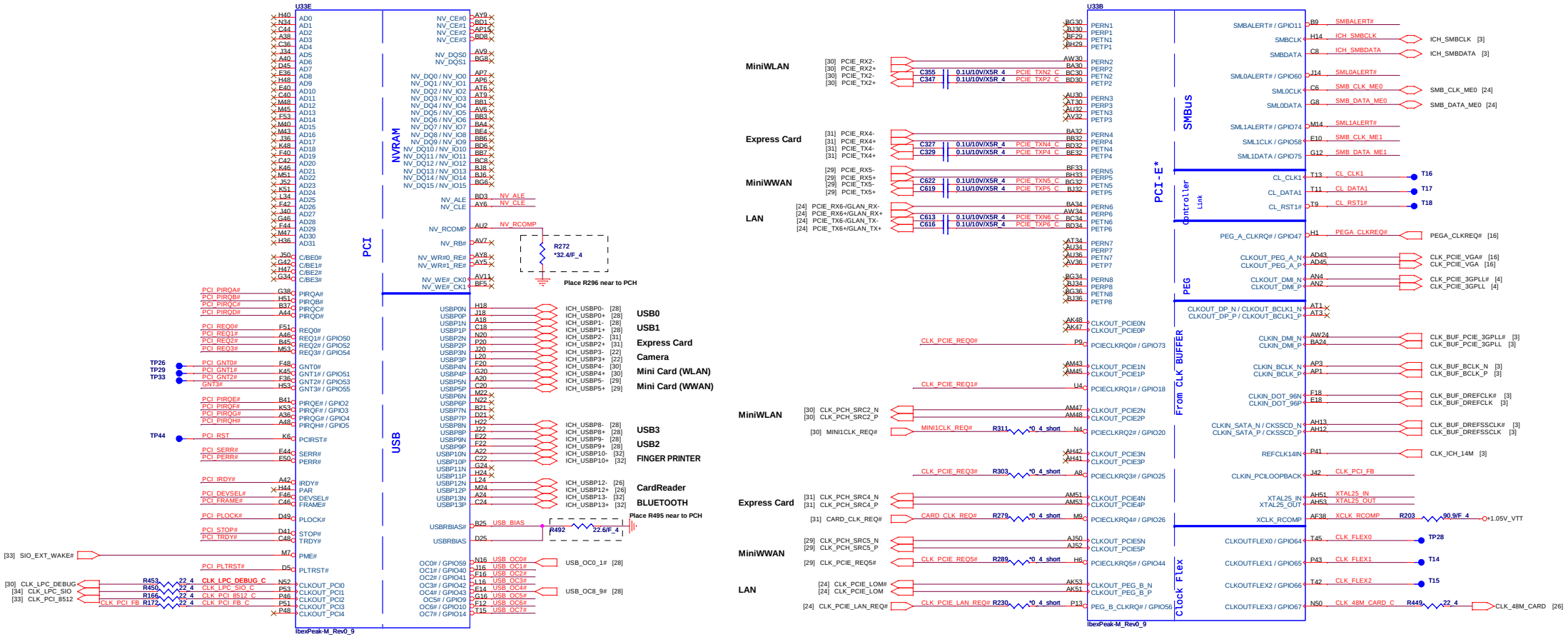

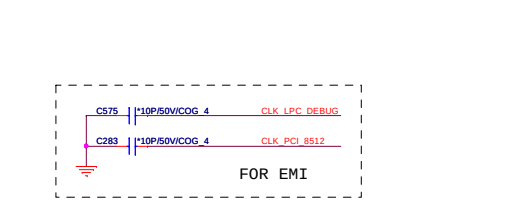

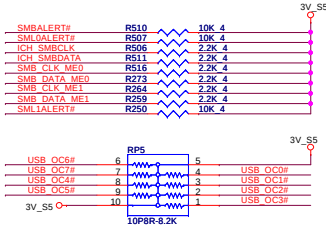

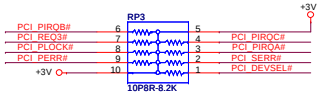

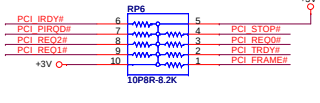

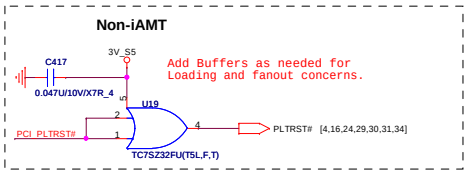

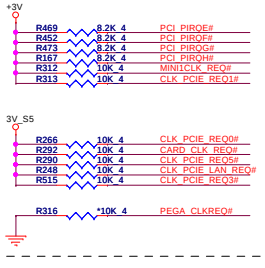

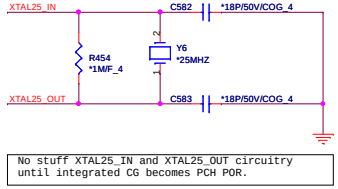

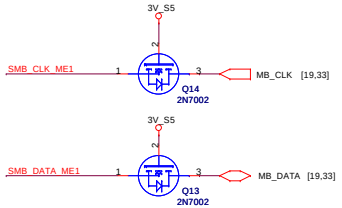

Boot BIOS Strap		
PCI_GNT0#	PCI_GNT#1	Boot BIOS Location
0	0	LPC
1	0	Reserved (NAND)
0	1	PCI
1	1	SPI

DMI Termination Voltage	
NV_CLE	Set to Vcc when LOW Set to Vcc/2 when HIGH

Danbury Technology Enabled	
NV_ALE	High = Enable Low = Disable

A16 swap override Strap/Top-Block Swap Override jumper	
GNT3#	Low = A16 swap override/Top-Block Swap Override enabled High = Default

PROJECT : LL5A Quanta Computer Inc.			
Size: Custom	Document Number: PCH 3/6 (PCI)		Rev: 1B
Date: Tuesday, October 20, 2009	Sheet 10 of 43		

IBEX PEAK-M (GPIO,VSS_NCTF,RSVD)

[3,4,6,8,9,10,12,14,15,16,18,19,22,23,25,26,27,28,29,30,31,32,33,34,35,36,37,38,39,40,41,42] +3V
[4,8,9,10,12,24,30,37] 3V_S5
[3,4,6,8,9,10,12,24,37,40,42] +1.05V_VTT

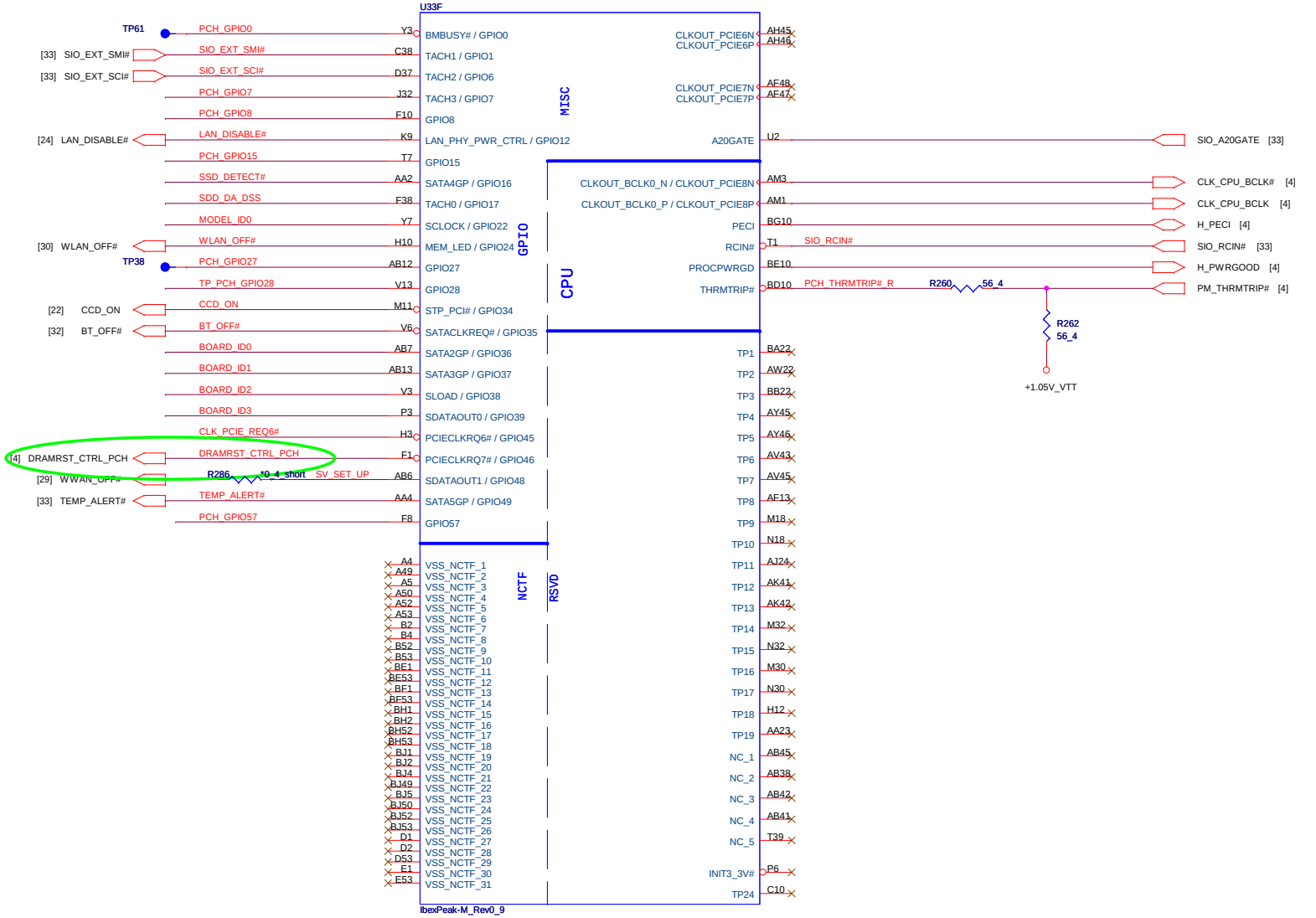

3V_S5

PCH_GPIO8	R268	10K_4
LAN_DISABLE#	R512	10K_4
PCH_GPIO15	R295	1K_4
TP_PCH_GPIO28	R513	10K_4
PCH_GPIO57	R270	10K_4
CLK_PCIE_REQ6#	R317	10K_4
DRAMRST_CTRL_PCH	R523	10K_4
WLAN_OFF#	R505	10K_4

+3V

SIO_RCIN#	R305	10K_4
SIO_A20GATE	R304	10K_4
CCD_ON	R514	10K_4
PCH_GPIO7	R210	10K_4
BT_OFF#	R287	10K_4
SIO_EXT_SCI#	R470	10K_4
SIO_EXT_SMI#	R468	10K_4
TEMP_ALERT#	R294	10K_4
SSD_DETECT#	R293	10K_4
SDD_DA_DSS	R191	10K_4

Board ID

Board ID For Function	ID3 GPIO39	ID2 GPIO38	ID1 GPIO37	ID0 GPIO36
SDV	0	0	0	0
SIV	0	0	0	1
SIT	0	0	1	0
SVT	0	0	1	1
SOVP	0	1	0	0

+3V

R519	*10K_4	BOARD_ID0	R517	10K_4
R299	*10K_4	BOARD_ID1	R298	10K_4
R309	*10K_4	BOARD_ID2	R302	10K_4
R315	*10K_4	BOARD_ID3	R306	10K_4

Model ID

Model ID	MODEL_ID0	MODEL_ID1
Default	0	0
LL3/LL3A	0	1
LL5/LL5A	1	0
	1	1

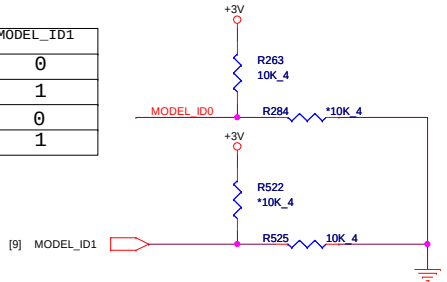

+3V

SV_SET_UP R285 10K_4

SV_SET_UP	1-X High = Strong (Default)

PROJECT : LL5A
Quanta Computer Inc.

Size	Document Number	Rev
Custom	PCH 4/6 (GPIO)	1B
Date: Saturday, October 24, 2009	Sheet 11 of 43	

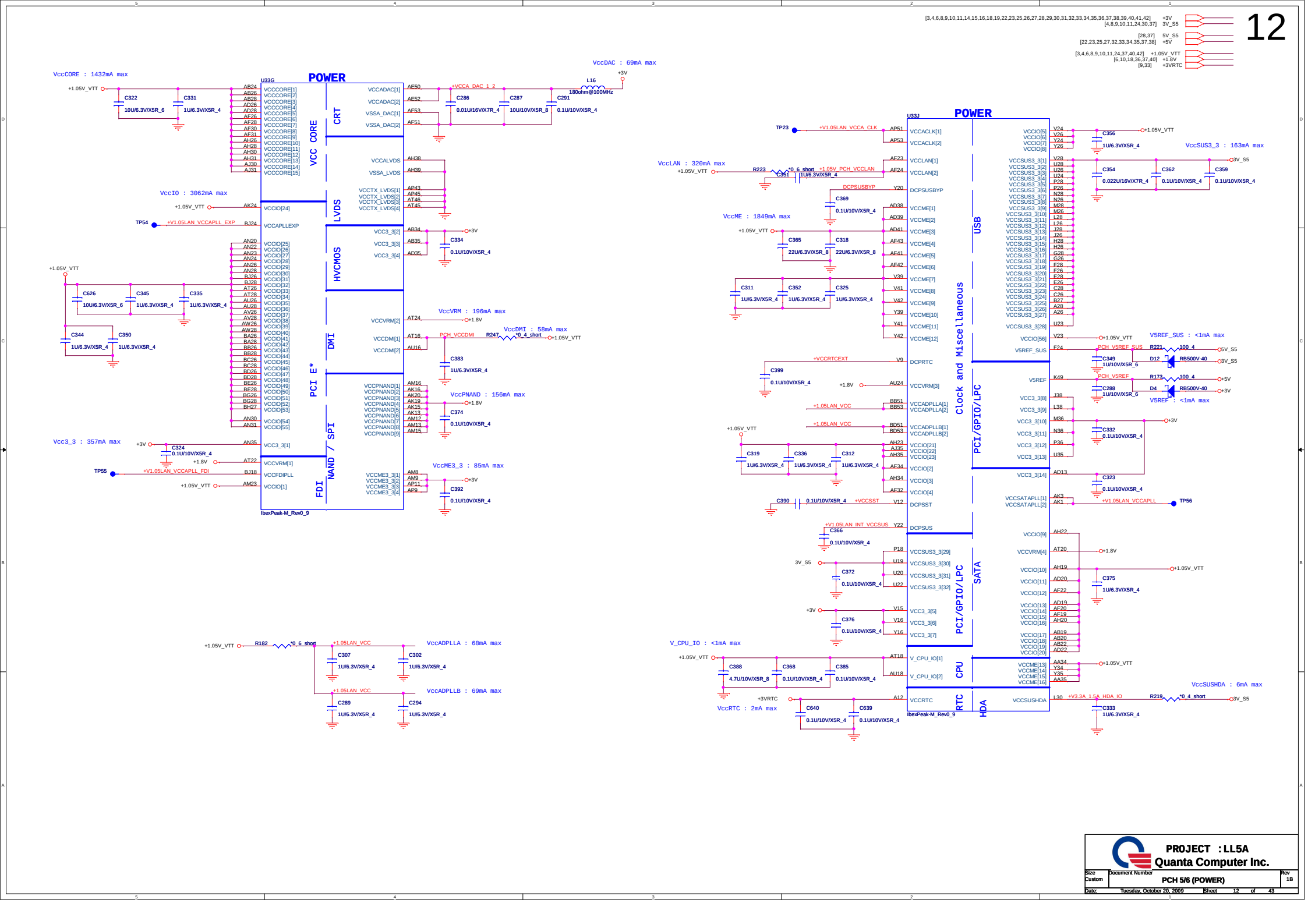

PROJECT	: LL5A
Quanta Computer Inc.	
Size: Custom	Document Number: PCH 5/6 (POWER)
Rev: 1B	
Date: Tuesday, October 20, 2009	Sheet 12 of 43

IBEX PEAK-M (GND)

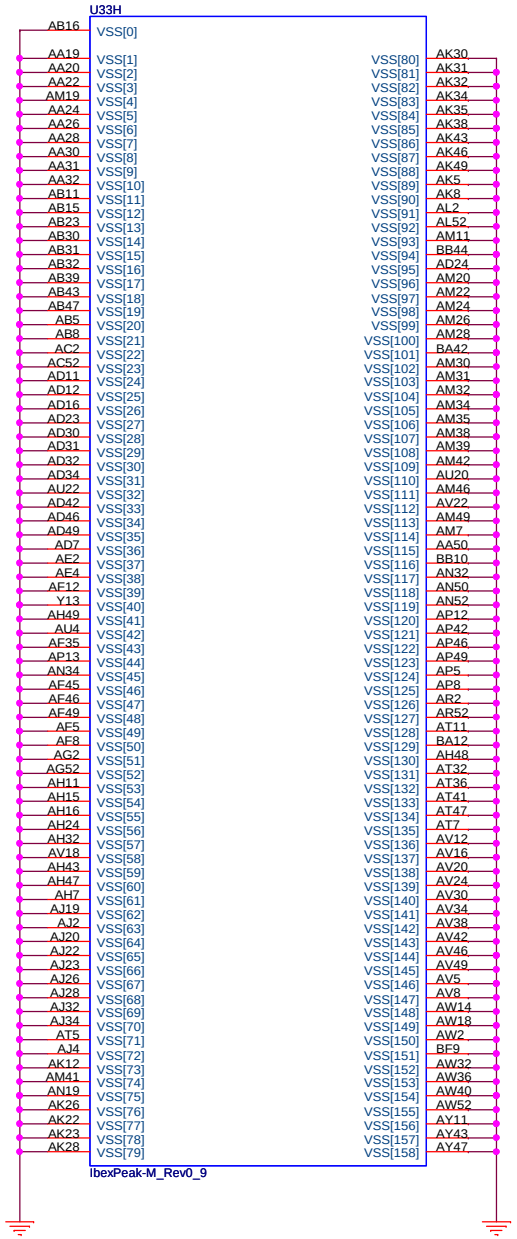

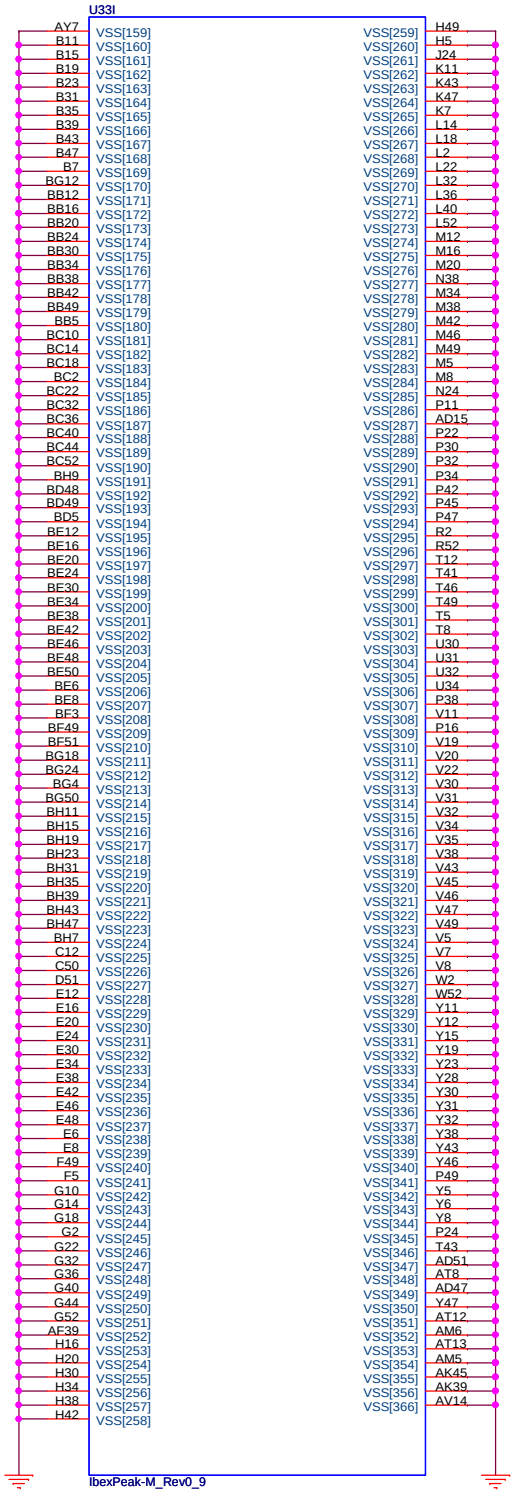

PROJECT : LL5A
Quanta Computer Inc.

Size	Document Number	Rev
Custom	PCH 6/6 (GND)	1B
Date: Tuesday, October 20, 2009	Sheet 13 of 43	

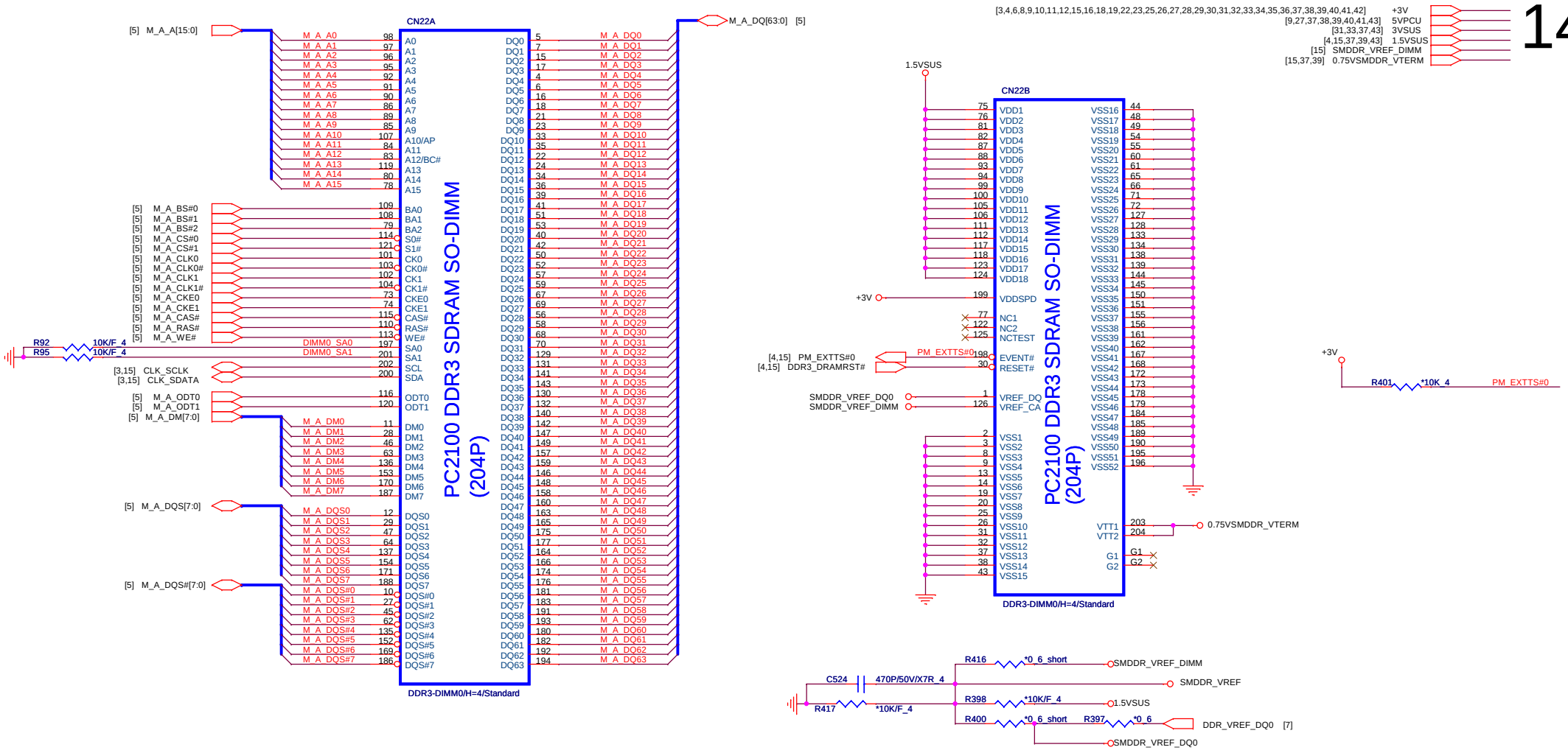

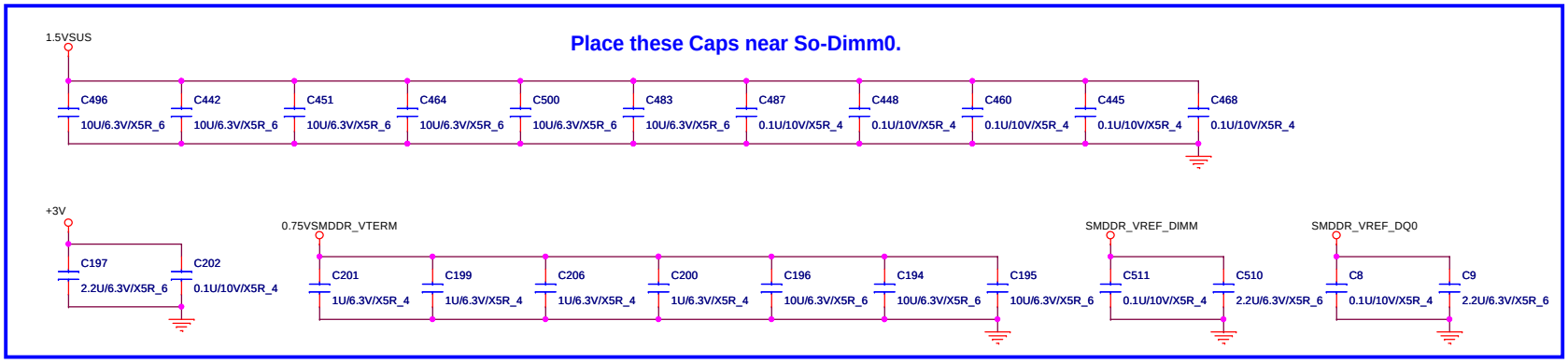

PROJECT : LL5A
Quanta Computer Inc.

Size	Document Number	Rev
Custom	DDR3 DIMM-0(H=5.2)	1B
Date: Tuesday, October 20, 2009	Sheet 14 of 43	

[3,4,6,8,9,10,11,12,14,16,18,19,22,23,25,26,27,28,29,30,31,32,33,34,35,36,37,38,39,40,41,42] +3V
[31,33,37,43] 3VSUS
[4,14,37,39,43] 1.5VSUS
[14] SMDDR_VREF_DIMM
[14,37,39] 0.75VSMDDR_VTERM

CN21A

DDR3-DIMM1/H=5.2/Standard

CN21B

DDR3-DIMM1/H=5.2/Standard

U7 *G780P81U

ADDRESS: 98H

Place these Caps near So-Dimm1.

1.5VSUS	C486 10U/6.3V/X5R_6	C438 10U/6.3V/X5R_6	C441 10U/6.3V/X5R_6	C508 10U/6.3V/X5R_6	C477 10U/6.3V/X5R_6	C497 10U/6.3V/X5R_6	C450 0.1U/10V/X5R_4	C446 0.1U/10V/X5R_4	C459 0.1U/10V/X5R_4	C466 0.1U/10V/X5R_4	C476 0.1U/10V/X5R_4
+3V	C203 2.2U/6.3V/X5R_6	C526 0.1U/10V/X5R_4									
0.75VSMDDR_VTERM	C533 1U/6.3V/X5R_4	C211 1U/6.3V/X5R_4	C534 1U/6.3V/X5R_4	C212 1U/6.3V/X5R_4	C535 10U/6.3V/X5R_6	C214 10U/6.3V/X5R_6	C215 10U/6.3V/X5R_6				
SMDDR_VREF_DIMM	C521 0.1U/10V/X5R_4	C522 2.2U/6.3V/X5R_6									
SMDDR_VREF_DQ1	C10 0.1U/10V/X5R_4	C11 2.2U/6.3V/X5R_6									

PROJECT : LL5A
Quanta Computer Inc.

Size	Document Number	Rev
Custom	DDR3 DIMM-1(H=9.2)	1B
Date: Tuesday, October 20, 2009	Sheet 15 of 43	

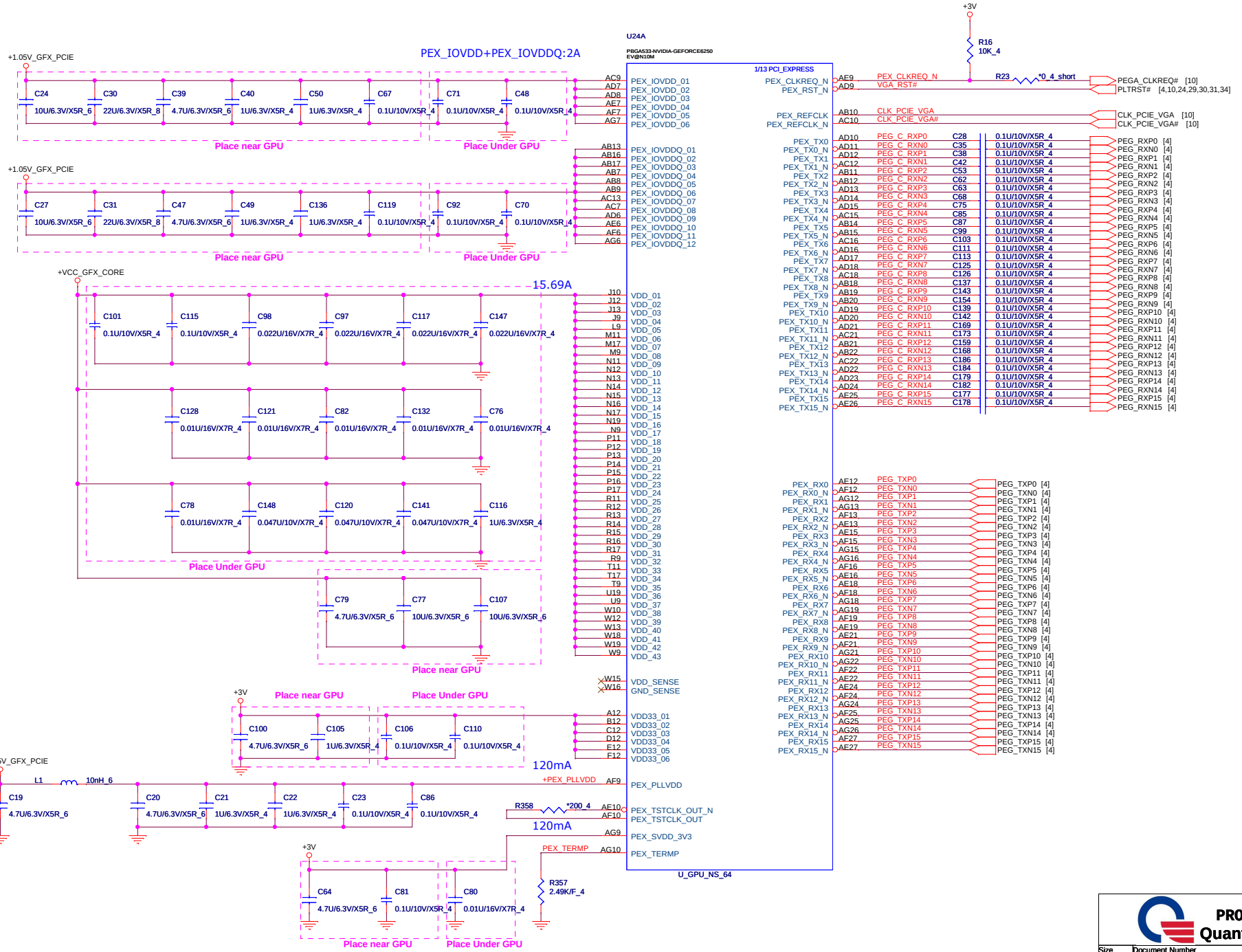
U24A
PBGA533-NVIDIA-GEFORCE6250
EV@N10M
1/13 PCI_EXPRESS
PEX_IOVDD+PEX_IOVDDQ:2A
+1.05V_GFX_PCIE
Place near GPU
Place Under GPU
+VCC_GFX_CORE
15.69A
+3V
120mA
R16
10K_4
R23
*0_4_short
R358
*200_4
R357
2.49K/F_4
L1
10nH_6
+PEX_PLLVDD
PEX_TERMP
U_GPU_NS_64
PROJECT : LL5A
Quanta Computer Inc.
NV10N(PCIE I/F) 1/5
Size Custom
Rev 1B
Date: Tuesday, October 20, 2009
Sheet 16 of 43

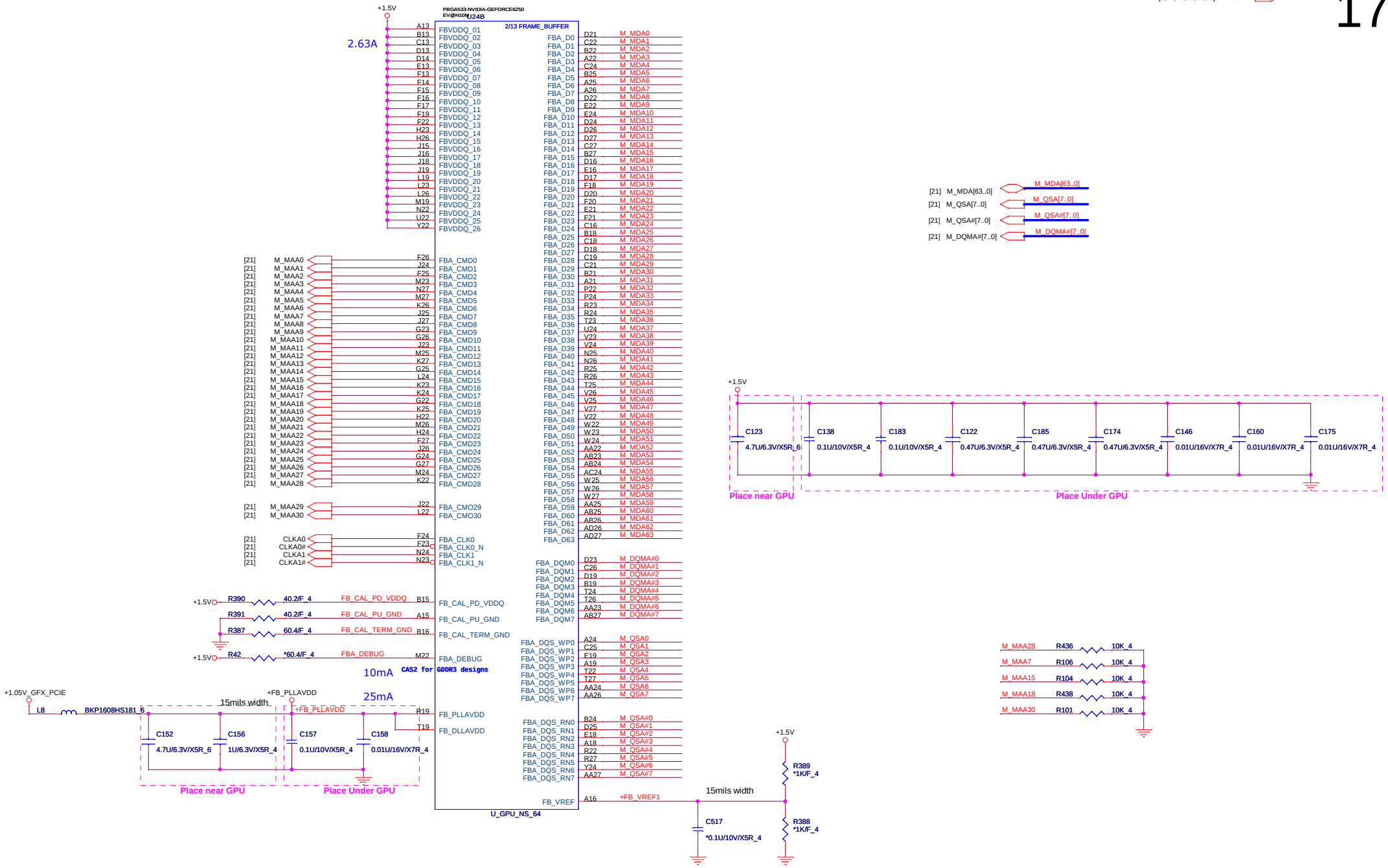

PROJECT : LL5A
Quanta Computer Inc.

Size	Document Number	Rev
Custom	N10M (MEMORY I/F) 2/5	1B
Date: Tuesday, October 20, 2009	Sheet 17 of 43	

[3,4,6,8,9,10,11,12,14,15,16,19,22,23,25,26,27,28,29,30,31,32,33,34,35,36,37,38,39,40,41,42] +3V
[16,17,37,43] +1.05V_GFX_PCIE
[6,10,12,36,37,40] +1.8V

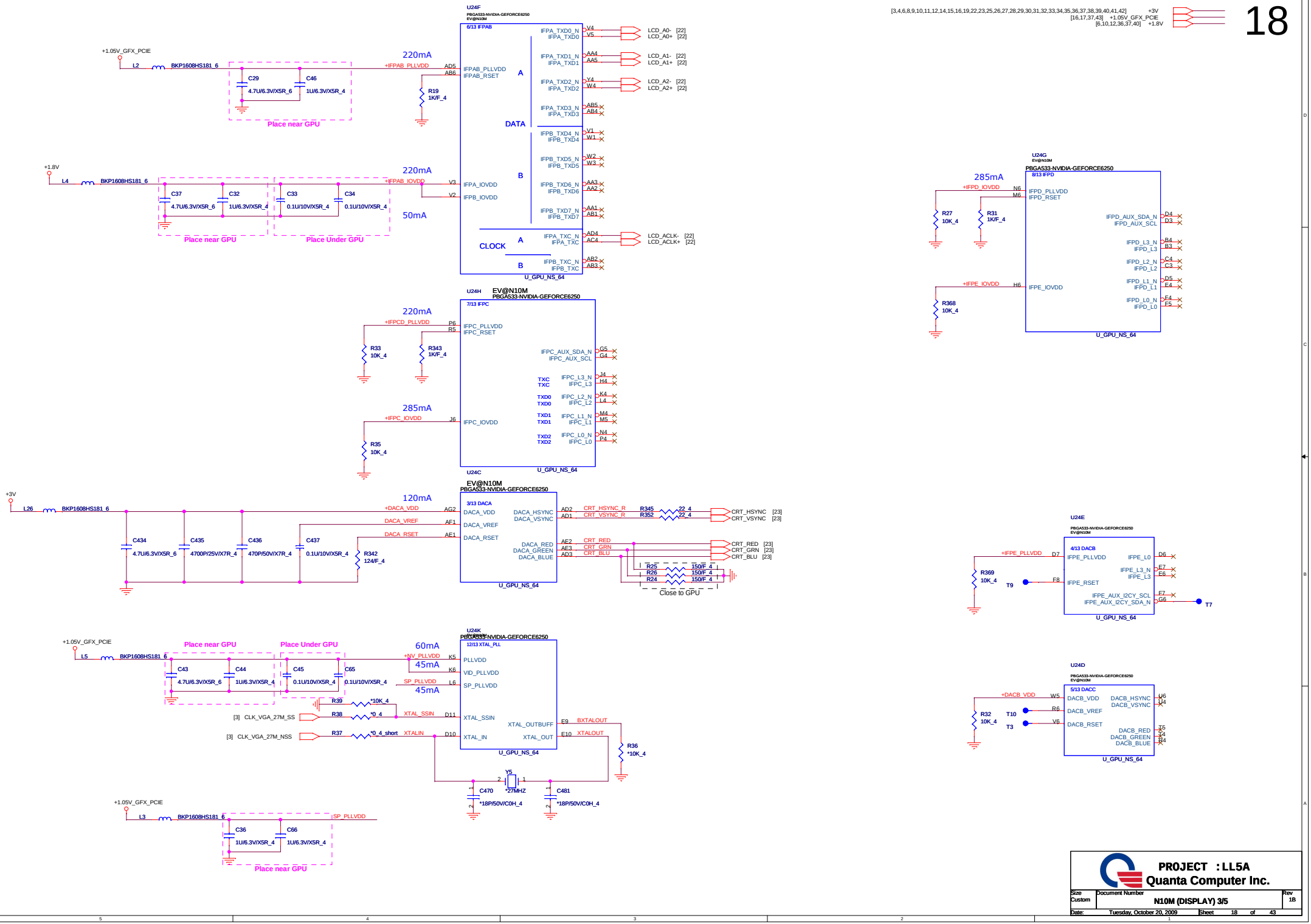

PROJECT : LL5A Quanta Computer Inc.			
Size Custom	Document Number N10M (DISPLAY) 3/5		Rev 1B
Date: Tuesday, October 20, 2009		Sheet 18 of 43	

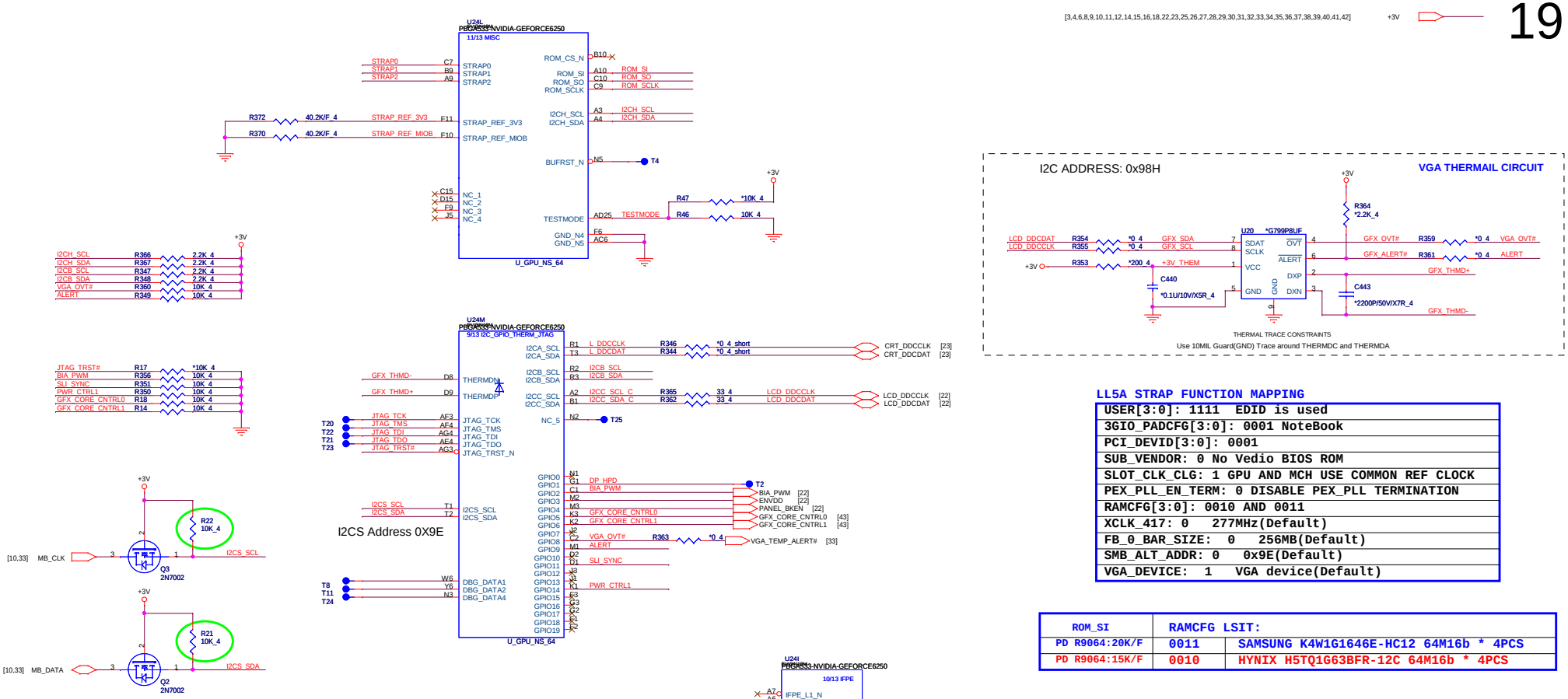

[3,4,6,8,9,10,11,12,14,15,16,18,22,23,25,26,27,28,29,30,31,32,33,34,35,36,37,38,39,40,41,42] +3V

I2C ADDRESS: 0x98H

VGA THERMAIL CIRCUIT

LL5A STRAP FUNCTION MAPPING

USER[3:0]: 1111 EDID is used
3GIO_PADCFG[3:0]: 0001 NoteBook
PCI_DEVID[3:0]: 0001
SUB_VENDOR: 0 No Vedio BIOS ROM
SLOT_CLK_CLG: 1 GPU AND MCH USE COMMON REF CLOCK
PEX_PLL_EN_TERM: 0 DISABLE PEX_PLL TERMINATION
RAMCFG[3:0]: 0010 AND 0011
XCLK_417: 0 277MHz(Default)
FB_0_BAR_SIZE: 0 256MB(Default)
SMB_ALT_ADDR: 0 0x9E(Default)
VGA_DEVICE: 1 VGA device(Default)

ROM_SI	RAMCFG LSIT:	
PD R9064:20K/F	0011	SAMSUNG K4W1G1646E-HC12 64M16b * 4PCS
PD R9064:15K/F	0010	HYNIX H5TQ1G63BFR-12C 64M16b * 4PCS

PCI_DEVID[4] / SUBVENDOR

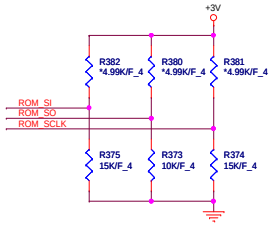

Straps

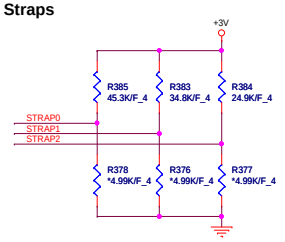

Logical Strap Bit Mapping

	PU	PD
5K	1000	0000
10K	1001	0001
15K	1010	0010
20K	1011	0011
25K	1100	0100
30K	1101	0101
35K	1110	0110
45K	1111	0111

GPIO ASSIGNMENTS

GPIO	NB9X	N10X	I/O	ACTIVE	Function Description
0	General Purpose	General Purpose	I/O	N/A	
1	HPD-C	HPD-C	I	N/A	Hot Plug Detect for IFP Link C
2	LCD0_BL_PWM	LCD0_BL_PWM	O	H	Panel Backlight Brighness Control (PWM Capable)
3	LCD0_VDD	LCD0_VDD	O	H	Panel Power Enable
4	LCD0_BL_PWM	LCD0_BL_PWM	O	H	Panel Backlight ON/OFF
5	GPU_VID0	GPU_VID0	O	N/A	GPU_VID0
6	GPU_VID1	GPU_VID1	O	N/A	GPU_VID1
7	GPU_VID2/MEM_VID	GPU_VID2	O	N/A	GPU_VID2
8	OVERT	OVERT	I/O	L	Thermal Over Temperature
9	FAN_PWM/ALERT	ALERT	I/O	L	Thermal Alert (PWM Capable)
10	MEM_VREF	MEM_VREF	O	N/A	Memory VREF Switch
11	SLI_SYNC	SLI_SYNC	I/O	L	SLI SYNC0
12	AC_DET	PWR_LEVEL (in)	I	N/A	Power Level Detect
13	PWR_CTRL0	MEM_VID (out)	O	L	MEM_VID0
14	PWR_CTRL1	PWR_CTRL1	O	N/A	Power Supply Control
15	HPD-E	HPD-E	I	N/A	Hot Plug Detect for IFP Link E
16	DVI_MODE1	FAN_PWM(out)	O		Fan PWM Control
17	HDMI_DETECT0	Reserved	N/A		
18	DVI_MODE1	Reserved	N/A		
19	HDMI_DETECT1	HPD-D	I	N/A	Hot Plug Detect for IFP Link D

Starps	NB9X	N10X	Function Description
ROM_SO	XCLK_277 TVMODE(2) TVMODE(1) TVMODE(0)	XCLK_277 TVMODE(2) TVMODE(1) TVMODE(0)	55nm PU 5K/F ohm 40nm PD 10K/F ohm
ROM_SCLK	PCI_DEVID_EXT SUB_VENDOR SLOT_CLK_CFG PEX_PLL_EN_TERM	PCI_DEVID_EXT SUB_VENDOR SLOT_CLK_CFG PEX_PLL_EN_TERM	55nm/40nm PD 15K/F ohm
ROM_SI	RAMCFG(3) RAMCFG(2) RAMCFG(1) RAMCFG(0)	RAMCFG(3) RAMCFG(2) RAMCFG(1) RAMCFG(0)	Hynix PD 15K/F ohm Samsung PD 20K/F ohm
Strap 2	PCI_DEVID(3) PCI_DEVID(2) PCI_DEVID(1) PCI_DEVID(0)	PCI_DEVID(3) PCI_DEVID(2) PCI_DEVID(1) PCI_DEVID(0)	55nm PU 25K/F ohm 40nm/GS PU 10K/F ohm 40nm/GE PU 5K/F ohm 40nm/NS PU 25K/F ohm
Strap 1	3GIO_PADCFG(3) 3GIO_PADCFG(2) 3GIO_PADCFG(1) 3GIO_PADCFG(0)	3GIO_PADCFG(3) 3GIO_PADCFG(2) 3GIO_PADCFG(1) 3GIO_PADCFG(0)	40nm/NS PU 34.9K/F ohm
Strap 0	USER(3) USER(2) USER(1) USER(0)	USER(3) USER(2) USER(1) USER(0)	

PROJECT : LL5A
Quanta Computer Inc.

Size	Document Number	Rev
C	N10M (GPIO & STRAPS) 4/5	1B

Date: Tuesday, October 20, 2009 Sheet 19 of 43

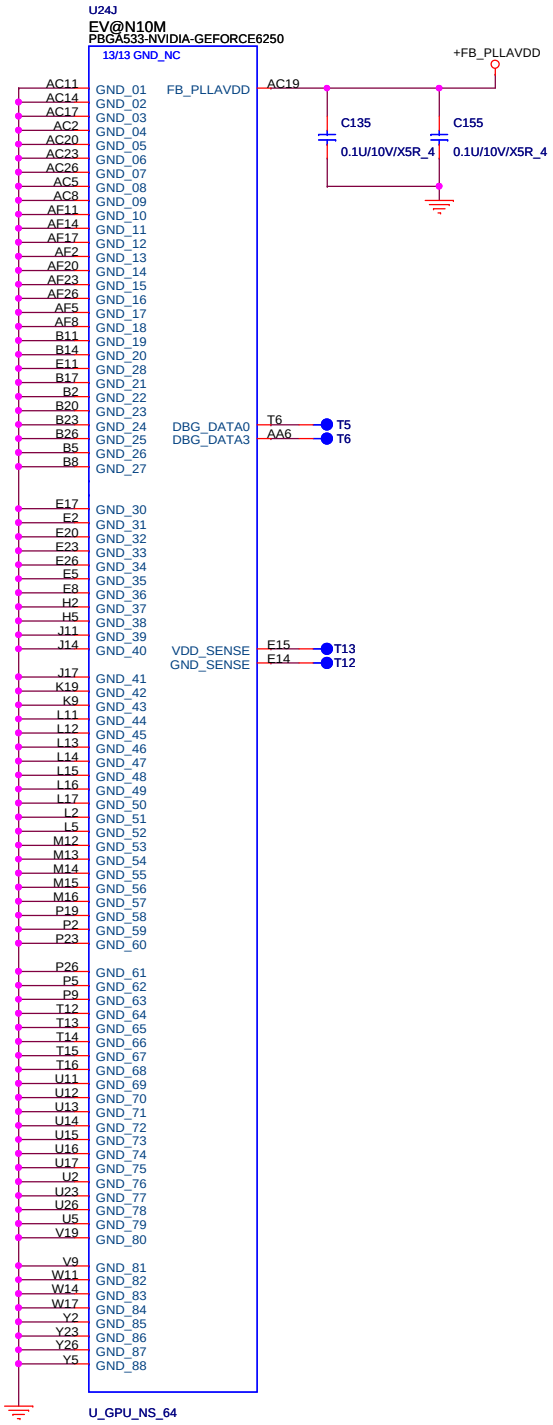

power up sequence

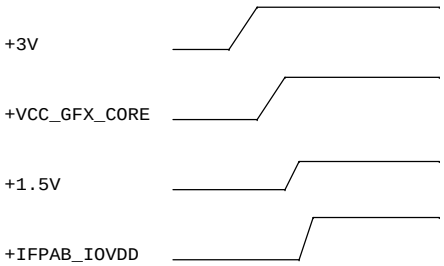

PROJECT : LL5A
Quanta Computer Inc.

Size	Document Number	Rev
Custom	N10M (GND) 5/5	1B
Date: Tuesday, October 20, 2009	Sheet 20 of 43	

256MB/ 512MB DDR3

[17] M_MDA[63..0] — M_MDA[63..0]
[17] M_QSA[7..0] — M_QSA[7..0]
[17] M_QSA#[7..0] — M_QSA#[7..0]
[17] M_DQMA#[7..0] — M_DQMA#[7..0]
[3,17,29,30,31,39] +1.5V

U4 — VRAM_DDR3 — 96-BALL SDRAM DDR3
U27 — VRAM_DDR3 — 96-BALL SDRAM DDR3
U26 — VRAM_DDR3 — 96-BALL SDRAM DDR3
U5 — VRAM_DDR3 — 96-BALL SDRAM DDR3

Should be 240 Ohms +-1%
R53 243/F_4
R437 243/F_4
R396 243/F_4
R105 243/F_4

R54 4.99K/F_4 — R55 4.99K/F_4 — C189 0.1U/10V/X5R_4 — VREFC_VMA1 — VREFD_VMA1
R99 4.99K/F_4 — R100 4.99K/F_4 — C224 0.1U/10V/X5R_4
R102 4.99K/F_4 — R103 4.99K/F_4 — C225 0.1U/10V/X5R_4 — VREFC_VMA2 — VREFD_VMA2
R52 4.99K/F_4 — R51 4.99K/F_4 — C188 0.1U/10V/X5R_4
R57 4.99K/F_4 — R56 4.99K/F_4 — C190 0.1U/10V/X5R_4 — VREFC_VMA3 — VREFD_VMA3
R434 4.99K/F_4 — R435 4.99K/F_4 — C540 0.1U/10V/X5R_4
R108 4.99K/F_4 — R107 4.99K/F_4 — C232 0.1U/10V/X5R_4 — VREFC_VMA4 — VREFD_VMA4
R74 4.99K/F_4 — R72 4.99K/F_4 — C193 0.1U/10V/X5R_4

close to U3003 AND U3004: C233, C556, C552, C527, C554 (10U/6.3V/X5R_6)
close to U3003: C231, C227, 1U/6.3V/X5R_4, C230, C208, C226, C223, C209 (1U/6.3V/X5R_4); C204
close to U3004: C547, C528, C538, C541, C537, C548, C542, C549 (1U/6.3V/X5R_4)
close to U3006 AND U3007: C553, C218, C210, C536, C555 (10U/6.3V/X5R_6)
close to U3006: C198, C222, C532, C221, C229, C228, C544, C523 (1U/6.3V/X5R_4)
close to U3007: C551, C529, C545, C546, C530, C550, C539, C543 (1U/6.3V/X5R_4)

CLKA1 — R432 243/F_4 — CLKA1#
Place near VRAM
CLKA0 — R433 243/F_4 — CLKA0#

MB ASSY' PN	Memory Straps	
31GC5MB0000	800MHz 512MB(64M*16)	AKD5LZGTW00 QuantaBuy
		AKD5LZGTW02 VOL B/S
		QuantaBuy
		VOL B/S
		QuantaBuy
		VOL B/S
		QuantaBuy
		VOL B/S
		QuantaBuy
		VOL B/S
		QuantaBuy
		VOL B/S

PROJECT : LL5A
Quanta Computer Inc.
Size: Custom | Document Number: VRAM_DDR3_512M | Rev: 1B
Date: Tuesday, October 20, 2009 | Sheet 21 of 43

[3,4,6,8,9,10,11,12,14,15,16,18,19,23,25,26,27,28,29,30,31,32,33,34,35,36,37,38,39,40,41,42] +3V
[27,37,39,41] +15V
[36,37,42] 5VSUS
[9,24,27,33,34,35,37,38,40,41,43] 3VPCU
[36,38,39,40,41,42,43] VIN
[12,23,25,27,32,33,34,35,37,38] +5V

LCDVCC

+15V +3V LCDVCC
R328 330K_4
Q21 AO3404
LCDVCC_R R332 *0_8_short
LCDVCC_ON
C424 0.022U/25V/X7R_6
C426 10U/6.3V/X5R_8
R338 22_8
5VSUS
Q20 2N7002
Q23 2N7002
R334 100K_4
Q22 PDTC144EU
[19] ENVDD
R335 100K_4

+3V
R333 2.2K_4
R331 2.2K_4
[19] LCD_DDCCLK
[19] LCD_DDCDAT
LCD_DDCCLK
LCD_DDCDAT

LCDVCC
+3V
LCD_DDCCLK
LCD_DDCDAT
[18] LCD_A0-
[18] LCD_A0+
[18] LCD_A1-
[18] LCD_A1+
[18] LCD_A2-
[18] LCD_A2+
[18] LCD_ACLK-
[18] LCD_ACLK+
+3V
VADJ_PWM
DISPON
GFX_PWR_SRC
+CAM_VCC
[32] BT_LED
ICH_USBP3+
ICH_USBP3-
[33] CAPSLED
[33] NUMLED
THINK LIGHT
[29,30] WWAN_LED
CN2 GS12401-1011-9F

Adress : A9H --Contrast
AAH --Backlight

back light

3VPCU +3V
R12 10K_4
R11 *4.7K_4
[33,34] LID551#
D1 RB500V-40
D2 RB500V-40
DISPON
C14 0.1U/10V/X5R_4
R341 100K_4
C26 *47P/50V/NPO_4
[19] PANEL_BKEN
R13 *0_4_short
R20 2.2K_4
R15 10K_4
C25 *1U/10V/X5R_6
Q1 PDTC144EU
LCD_BK_OFF [9]

THINK LIGHT LED ON

+5V
Q18 2N7002
C422 0.1U/10V/X5R_4
+15V
R327 1M_4
[33] THINK LIGHT#
Q19 PDTC144EU
R324 220_4
THINK LIGHT

[10] ICH_USBP3-
[10] ICH_USBP3+
L25
*DLW21HN900SQ2L
ICH_USBP3-
ICH_USBP3+

CAMERA VCC Control

+5V
+5V
+CAM_VCC
C13 *1U/6.3V/X5R_4
R9 *0_4
R3 *0_4
[11] CCD_ON
U1
VIN VOUT
SHDN
GND SET
*AT5231H-3.3KER
R10 *0_8_short
R5 *215K/F_4
R2 *100K/F_4
C12 4.7U/6.3V/X5R_6

GFX_PWR_SRC
R1 *0_8_short
VIN
C3 0.1U/25V/X5R_6
C2 0.1U/25V/X5R_6
C1 *10U/25V/X6S_12

[19] BIA_PWM
[33] BRIGHT_PWM
R330 *0_4_short
R329 *0_4
VADJ_PWM
C423 *47P/50V/NPO_4

PROJECT : LL5A
Quanta Computer Inc.

Size	Document Number	Rev
Custom	LCD CONN	1B
Date: Tuesday, October 20, 2009	Sheet 22 of 43	

Layout Note:
Setting R,G,B trace
impedance to 50 ohm.

[18] CRT_RED
[18] CRT_GRN
[18] CRT_BLU
[18] CRT_VSYNC
[18] CRT_HSYNC
[19] CRT_DDCCLK
[19] CRT_DDCDAT

CRT_VCC
D3 RB500V-40
C112 0.1U/10V/X5R_4
+5V
F1 FUSE1A6V_POLY
CRT_VCC_R
C118 *VARISTOR_4

L12 BLM18BA470SN1 CRT_R1
L11 BLM18BA470SN1 CRT_G1
L9 BLM18BA470SN1 CRT_B1

R45 150/F_4
R43 150/F_4
R41 150/F_4
C181 5.6P/50V/COG_4
C171 5.6P/50V/COG_4
C150 5.6P/50V/COG_4
C149 5.6P/50V/COG_4
C170 5.6P/50V/COG_4
C180 5.6P/50V/COG_4

TP2

CN23
070546FR015S238CR

ESD PROTECTION
D19 *TVSS5VESPT CRT_R1
D18 *TVSS5VESPT CRT_G1
D17 *TVSS5VESPT CRT_B1
D15 *TVSS5VESPT CRTVSYNC
D16 *TVSS5VESPT CRTHSYNC
D14 *TVSS5VESPT DDCCLK3
D20 *TVSS5VESPT DDCDAT3

+5V
U21 AHCT1G125DCH
U22 AHCT1G125DCH
C69 0.1U/10V/X5R_4
VGAVSYNC_R
VGAHSYNC_R
R34 10_4
R40 10_4
CRTVSYNC1
CRTHSYNC1

Place near
U5001,U5002 < 200 mil

C96 *10P/50V/COG_4
C57 *10P/50V/COG_4

L6 HB-1T1608-121JT CRTVSYNC
L7 HB-1T1608-121JT CRTHSYNC
C102 10P/50V/COG_4
C74 10P/50V/COG_4

Place near CN5002 connector
< 200 mil

+3V
CRT_VCC
R50 10K_4
R29 10K_4
R48 2.2K_4
R30 2.2K_4
Q24 2N7002K-T1-E3
Q26 2N7002K-T1-E3
DDCCLK2 R28 *0_6_short DDCCLK3
DDCDAT2 R49 *0_6_short DDCDAT3
C187 *10P/50V/COG_4
C41 *10P/50V/COG_4

PROJECT : LL5A
Quanta Computer Inc.

Size	Document Number	Rev
Custom	CRT CONN	1B
Date: Tuesday, October 20, 2009	Sheet 23 of 43	

LANVCC

3VPCU
Q10 AO6402A
[8] SLP_LAN#
R174 *0_4
[37] LAN_ON
R180 *0_4_short
+3.3V_LAN_R
R171 *0_8_short
+3.3V_LAN
C293 0.1U/10V/X5R_4

Core Power Decoupling

+1.0V_LOM
C273 4.7U/6.3V/X5R_6
C277 0.1U/10V/X5R_4
C278 0.1U/10V/X5R_4
C280 0.1U/10V/X5R_4
C298 0.1U/10V/X5R_4
C297 0.1U/10V/X5R_4
C284 0.1U/10V/X5R_4
C281 0.1U/10V/X5R_4
C279 0.1U/10V/X5R_4

VDDIO Power Decoupling

+3.3V_LAN
C321 4.7U/6.3V/X5R_6
C295 0.1U/10V/X5R_4
C300 0.1U/10V/X5R_4
C270 0.1U/10V/X5R_4
C315 10U/10V/X5R_8

U12 82577LM/LC

[10] CLK_PCIE_LAN_REQ#
[4,10,16,29,30,31,34] PLTRST#
[10] CLK_PCIE_LOM
[10] CLK_PCIE_LOM#
[10] PCIE_RX6+/GLAN_RX+
[10] PCIE_RX6-/GLAN_RX-
C275 0.1U/10V/X5R_4 LAN_PCIETXDP
C276 0.1U/10V/X5R_4 LAN_PCIETXDN
[10] PCIE_TX6+/GLAN_TX+
[10] PCIE_TX6-/GLAN_TX-
PCIE

SMB_CLK_ME0_R
SMB_DAT_ME0_R
SMBUS

[11] LAN_DISABLE#
R177 *10K_4
LAN_DISABLE_N

LAN_DISABLE# is active low.

ACTLED#
LINKLED
LED0
LED1
LED2
LED

+3.3V_LAN
R146 10K_4
R145 10K_4
JTAG_TDI
JTAG_TDO
JTAG_TMS
JTAG_TCK
JTAG

LAN_XTALO
LAN_XTALI
XTAL_OUT
XTAL_IN

TEST_EN
RBIAS
R147 1K_4
R178 3.01K/F_4

MDI_PLUS0 / MDI_MINUS0 TRD0+ TRD0-
MDI_PLUS1 / MDI_MINUS1 TRD1+ TRD1-
MDI_PLUS2 / MDI_MINUS2 TRD2+ TRD2-
MDI_PLUS3 / MDI_MINUS3 TRD3+ TRD3-
MDI

VCT +VTC_LAN
RSVD_VCC3P3_1 R175 3.01K/F_4
RSVD_VCC3P3_2 R176 3.01K/F_4
VDD3P3_IN +3.3V_LAN
C296 1U/6.3V/X5R_4
VDD3P3_OUT +V3.3M_LAN_OUT
C271 0.1U/10V/X5R_4
VDD3P3_15 VDD3P3_19 VDD3P3_29

VDD1P0_47 VDD1P0_46 VDD1P0_37 VDD1P0_43 VDD1P0_11 VDD1P0_40 VDD1P0_22 VDD1P0_16 VDD1P0_8
+1.0V_LOM
C708 0.01U/16V/X7R_4
C stage(For EMI)

CTRL_1P0
VSS_EPAD

+1.0V_LOM
+1.05V_VTT
R136 *0_6

C306 10U/6.3V/X5R_6
C303 0.1U/10V/X5R_4
C310 0.01U/16V/X7R_4
R185 4.99K/F_4
CTRL_1P0
Q11 BCP69T1G

U13 CM1293A-04SO
TRD0- TRD0+
TRD1- TRD1+

U11 CM1293A-04SO
TRD2- TRD2+
TRD3+ TRD3-

LAN_XTALO_R C304 10P/50V/COG_4 LAN_XTALO
Y2 25MHZ
LAN_XTALI
C305 33P/50V/NPO_4
C299 33P/50V/NPO_4

Tramsformer

U8 NS892405

TRD0- TRD0+ C246 0.1U/10V/X5R_4
TRD1- TRD1+ C249 0.1U/10V/X5R_4
TRD2- TRD2+ C253 0.1U/10V/X5R_4
TRD3- TRD3+ C257 0.1U/10V/X5R_4

TD4- TD4+ TCT4 TD3- TD3+ TCT3 TD2- TD2+ TCT2 TD1- TD1+ TCT1
MX4- MX4+ MCT4 MX3- MX3+ MCT3 MX2- MX2+ MCT2 MX1- MX1+ MCT1

LAN_MX0- LAN_MX0+ LAN_MCT0 LAN_MX1- LAN_MX1+ LAN_MCT1 LAN_MX2- LAN_MX2+ LAN_MCT2 LAN_MX3- LAN_MX3+ LAN_MCT3

R119 75/F_4 LANCT3
R126 75/F_4
R130 75/F_4
R134 75/F_4

C260 1U/10V/X5R_6
Place near to Transformer

R127 1M_6
C256 1000P/3KV/NPO_18

RJ45 Connector

+3.3V_LAN
R120 150/F_4 LAN_YLED
ACTLED#
LAN_MX0+ LAN_MX0- LAN_MX1+ LAN_MX2+ LAN_MX2- LAN_MX1- LAN_MX3+ LAN_MX3-
+3.3V_LAN
R114 150/F_4 LAN_GLED
LINKLED

CN25 100073FR012S176ZL
G3 G4 G1 G2

+3.3V_LAN
3V_S5
R151 2.2K_4
R158 2.2K_4
[10] SMB_DATA_ME0
Q8 2N7002
SMB_DAT_ME0_R

3V_S5
[10] SMB_CLK_ME0
Q9 2N7002
SMB_CLK_ME0_R

PROJECT : LL5A
Quanta Computer Inc.

Size	Document Number	Rev
Custom	LAN(82577LM)	1B
Date: Tuesday, October 20, 2009	Sheet 24 of 43	

Close to codec
(12mA)
DVDD_IO should match HDA Bus.
Close to codec
(66mA)
Close to codec
(1.35A)
Close to codec

92HD81:
AVDD:65.72mA
PVDD:1.35A
DVDD,DVDD_IO:120mA

Codec

PORT_X Pin: W/S=10/12
VREFOUT_X Pin: W/S=10/10
Power Pin : 20mil

Layout

Analog

The Gap between Analog & Digital should be 60 ~ 100 mil

Digital

Sense_A	Sense_B	RES
Port_ A	Port_ E	39.2K
Port_ B	Port_ F	20K

INT Speaker

CN15 R-SPEAKERS
CN16 L-SPEAKERS

INT MIC

CN9 MIC_CON

Headphone out

CN14 HEADPHONE_JACK
Normal Open

PC BEEP

U15 TC7SH86FU

External Microphone Jack

Stereo MIC
CN12 MIC_JACK
Normal Open

EMI Reserved

C stage

Layout Note:
Place close to Audio Codec.

PROJECT : LL5A
Quanta Computer Inc.

Size	Document Number	Rev
Custom	AUDIO CODEC (IDT 92HD81)	1B
Date: Tuesday, October 20, 2009	Sheet 25 of 43	

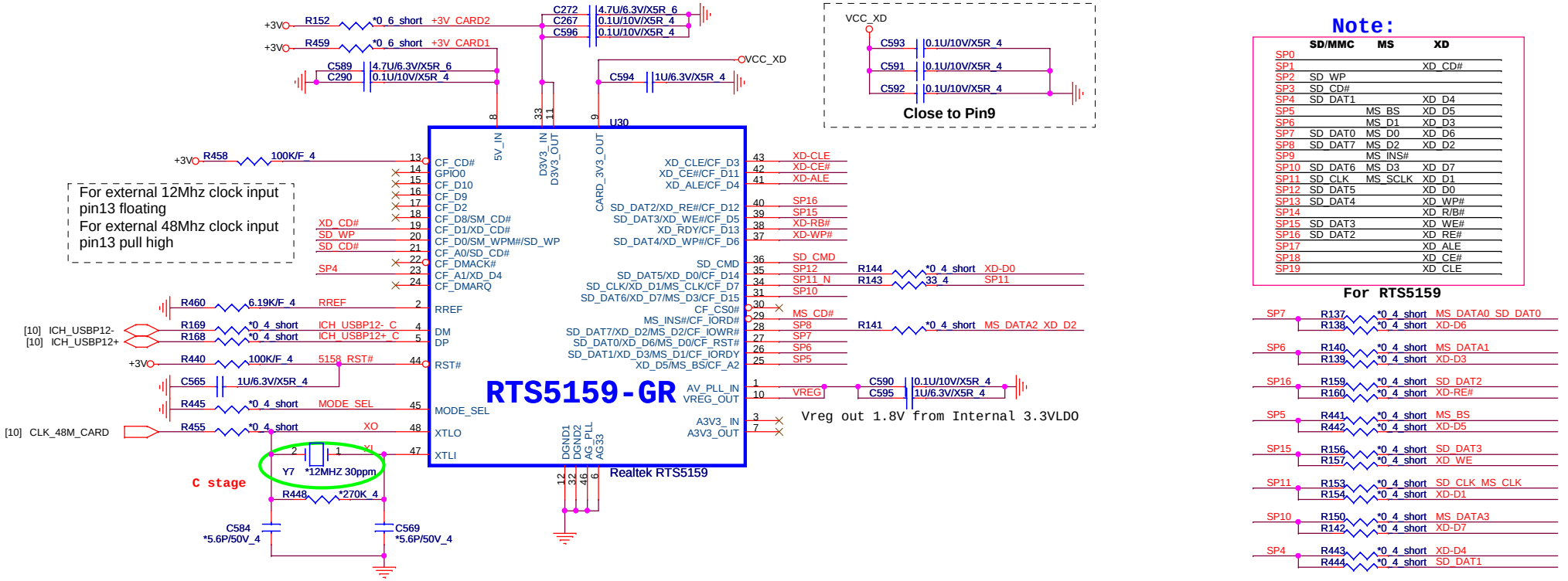

Note:

	SD/MMC	MS	XD
SP0			
SP1			XD_CD#
SP2	SD_WP		
SP3	SD_CD#		
SP4	SD_DAT1		XD_D4
SP5		MS_BS	XD_D5
SP6		MS_D1	XD_D3
SP7	SD_DAT0	MS_D0	XD_D6
SP8	SD_DAT7	MS_D2	XD_D2
SP9		MS_INS#	
SP10	SD_DAT6	MS_D3	XD_D7
SP11	SD_CLK	MS_SCLK	XD_D1
SP12	SD_DAT5		XD_D0
SP13	SD_DAT4		XD_WP#
SP14			XD_R/B#
SP15	SD_DAT3		XD_WE#
SP16	SD_DAT2		XD_RE#
SP17			XD_ALE
SP18			XD_CE#
SP19			XD_CLE

For RTS5159

SP7	R137	*0_4_short	MS_DATA0_SD_DAT0
	R138	*0_4_short	XD-D6
SP6	R140	*0_4_short	MS_DATA1
	R139	*0_4_short	XD-D3
SP16	R159	*0_4_short	SD_DAT2
	R160	*0_4_short	XD-RE#
SP5	R441	*0_4_short	MS_BS
	R442	*0_4_short	XD-D5
SP15	R156	*0_4_short	SD_DAT3
	R157	*0_4_short	XD_WE
SP11	R153	*0_4_short	SD_CLK_MS_CLK
	R154	*0_4_short	XD-D1
SP10	R150	*0_4_short	MS_DATA3
	R142	*0_4_short	XD-D7
SP4	R443	*0_4_short	XD-D4
	R444	*0_4_short	SD_DAT1

5 IN1 CARD READER
XD,MMC/SD,MS/MSP

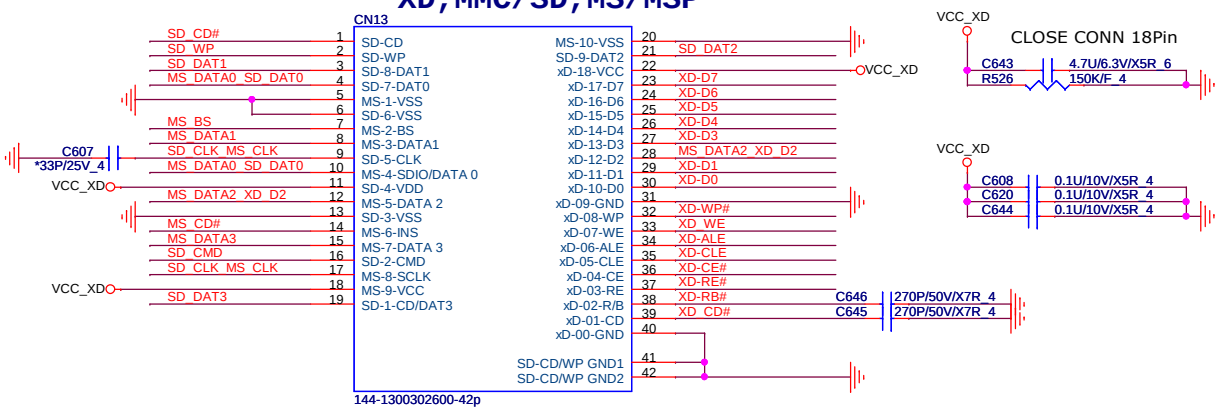

SATA-HDD CONNECTOR

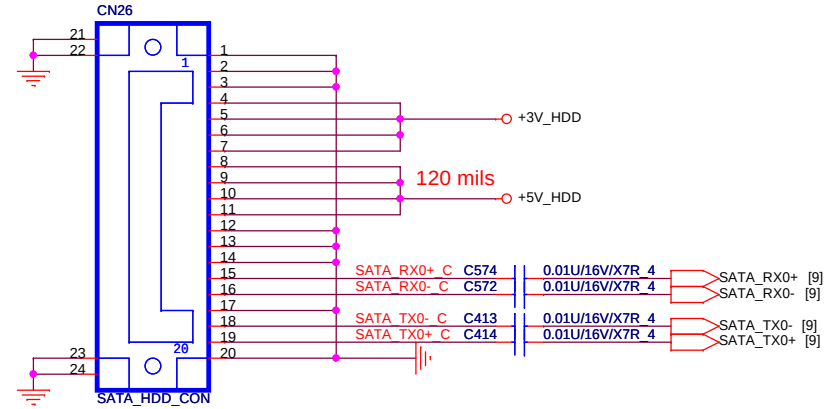

[3,4,6,8,9,10,11,12,14,15,16,18,19,22,23,25,26,28,29,30,31,32,33,34,35,36,37,38,39,40,41,42] +3V
[12,22,23,25,32,33,34,35,37,38] +5V
[22,37,39,41] +15V
[9,37,38,39,40,41,43] 5VPCU
[9,22,24,33,34,35,37,38,40,41,43] 3VPCU

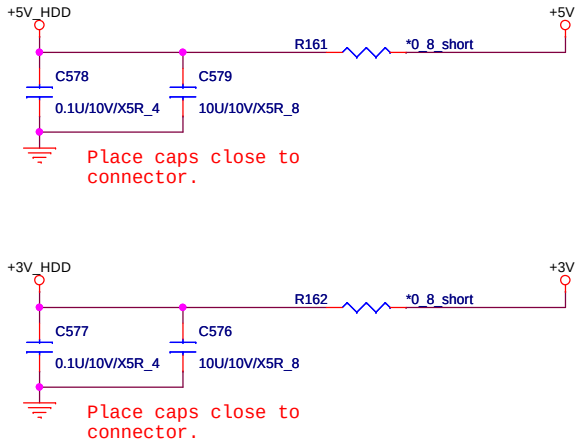

SATA CD-ROM

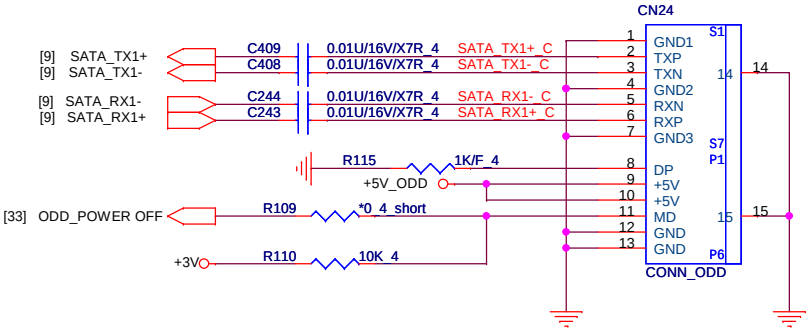

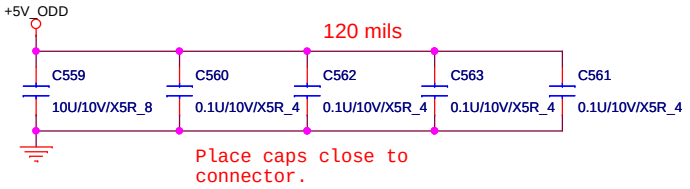

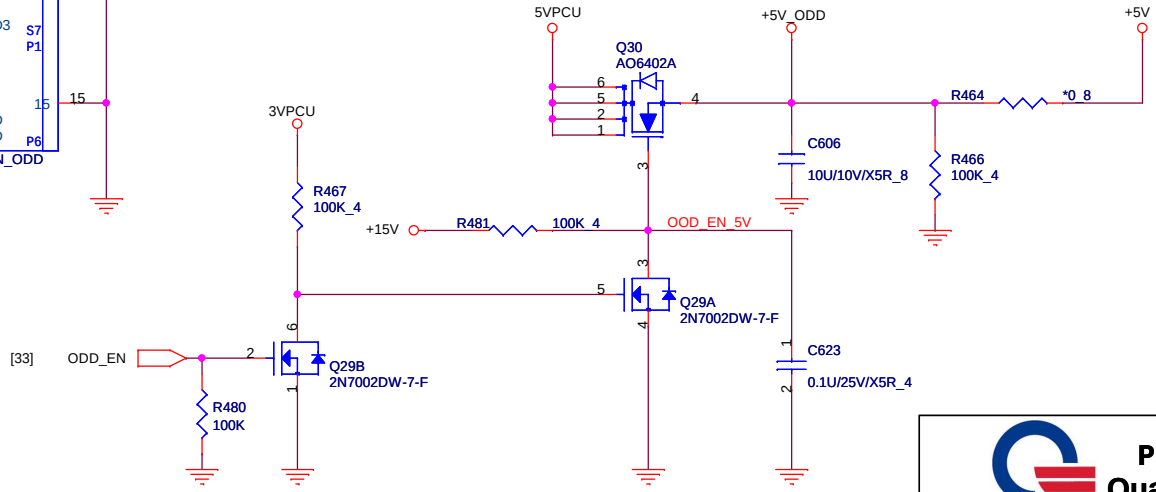

PROJECT : LL5A
Quanta Computer Inc.

Size	Document Number	Rev
Custom	HDD/ODD	1B
Date: Tuesday, October 20, 2009	Sheet 27 of 43	

USB 3

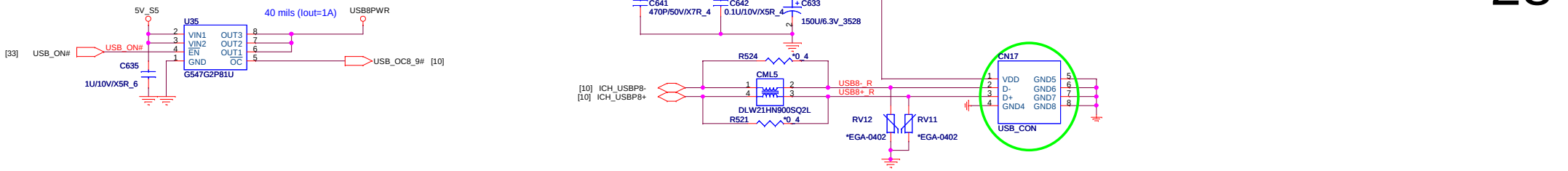

USB 2

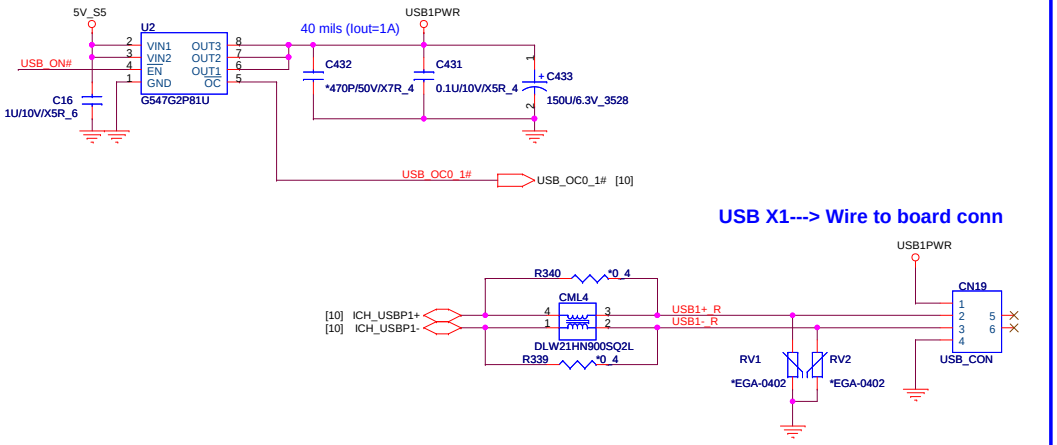

USB 4

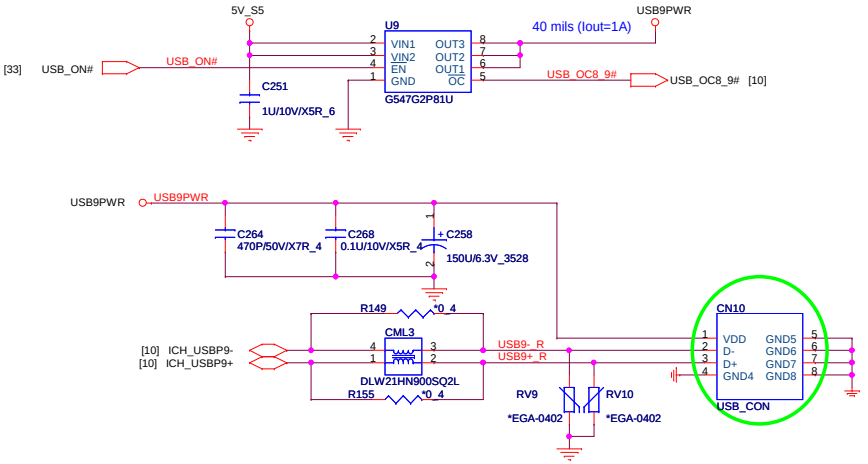

USB 1

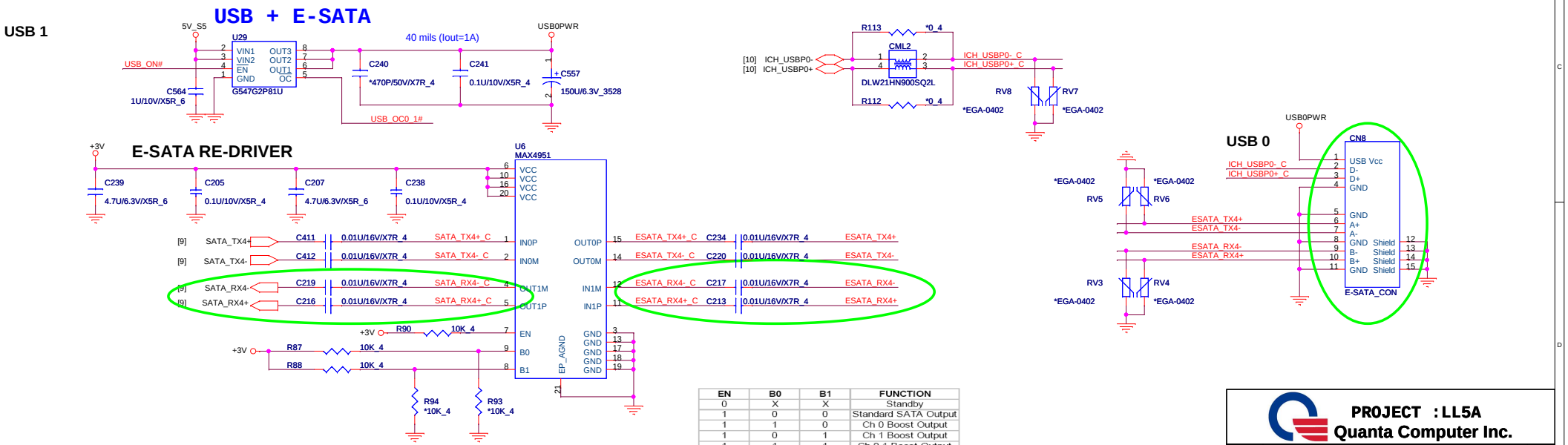

EN	B0	B1	FUNCTION
0	X	X	Standby
1	0	0	Standard SATA Output
1	1	0	Ch 0 Boost Output
1	0	1	Ch 1 Boost Output
1	1	1	Ch 0,1 Boost Output

PROJECT : LL5A
Quanta Computer Inc.

Size	Document Number	Rev
Custom	USB X3/USB+ESATA	1B
Date: Tuesday, October 20, 2009	Sheet 28 of 43	

[3,4,6,8,9,10,11,12,14,15,16,18,19,22,23,25,26,27,28,30,31,32,33,34,35,36,37,38,39,40,41,42] +3V
[3,17,21,30,31,39] +1.5V

MiniCard WWAN connector

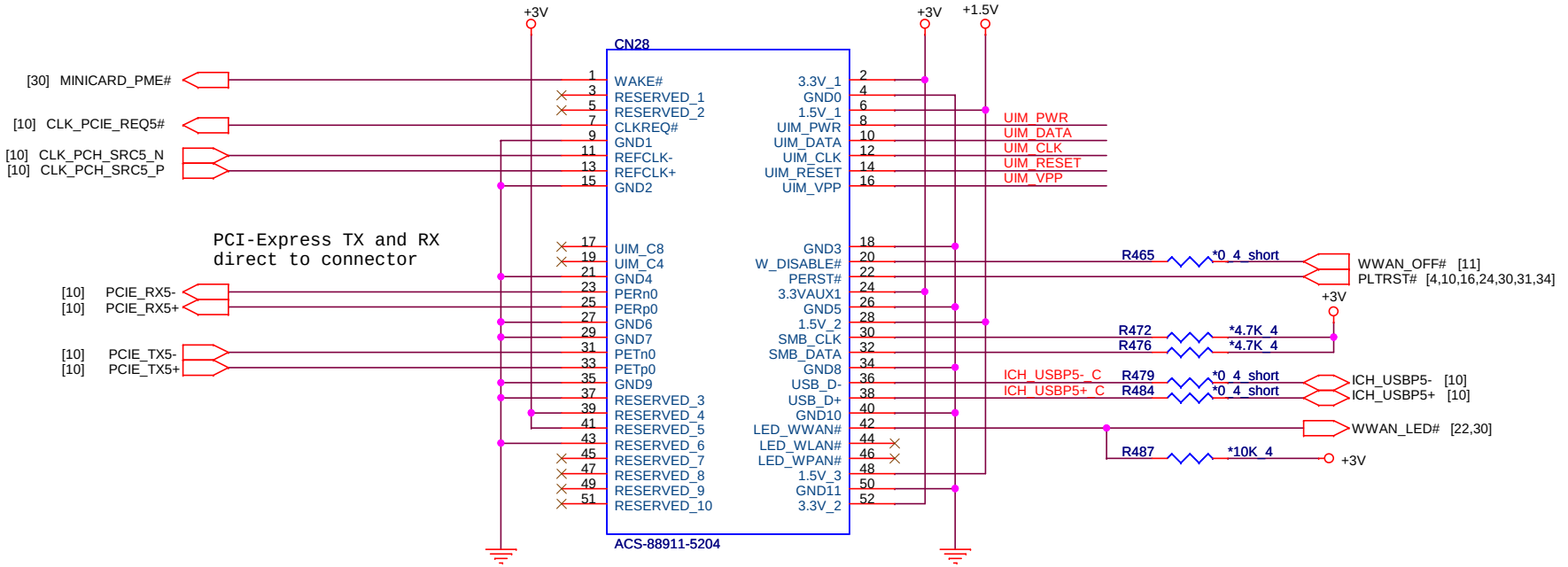

SIM Card CONN

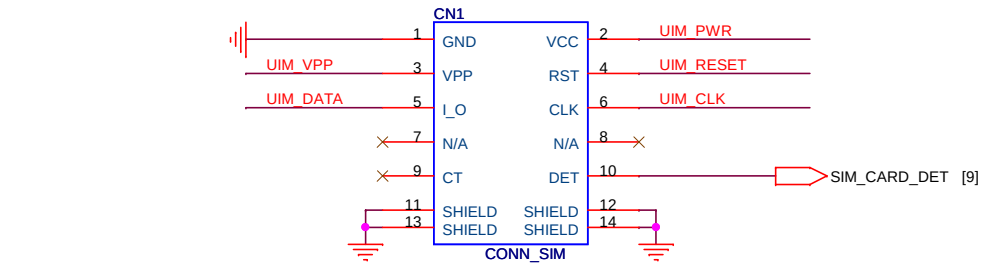

Layout Note:
UIM_RESET,UIM_CLK,UIM_DATA routting as short as possible

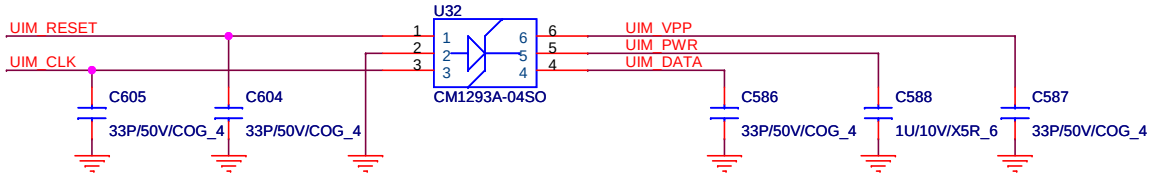

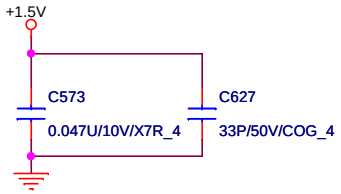

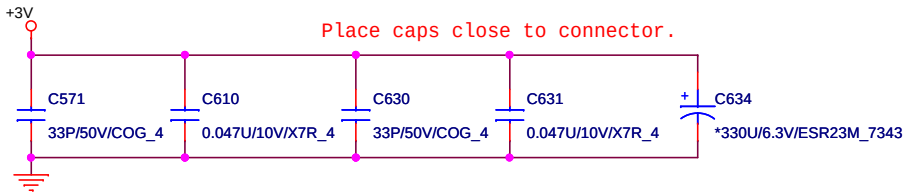

PROJECT : LL5A
Quanta Computer Inc.

Size	Document Number	Rev
Custom	MINI-Card (WWAN)	1B
Date: Tuesday, October 20, 2009	Sheet 29 of 43	

[3,4,6,8,9,10,11,12,14,15,16,18,19,22,23,25,26,27,28,29,31,32,33,34,35,36,37,38,39,40,41,42] +3V
[3,17,21,29,31,39] +1.5V
[4,8,9,10,11,12,24,37] 3V_S5

MiniCard WLAN/WiMAX connector

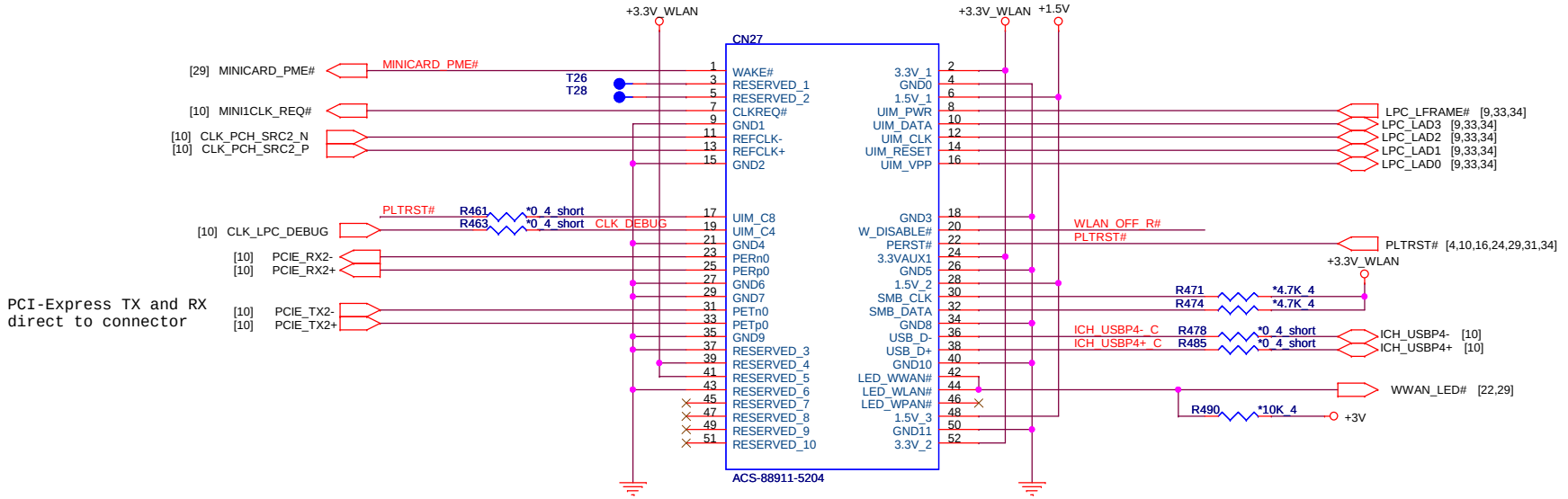

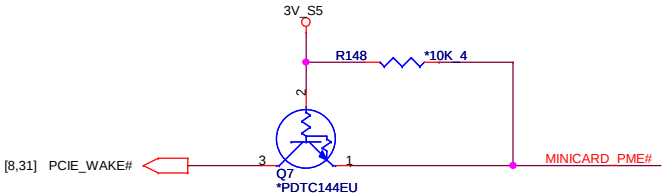

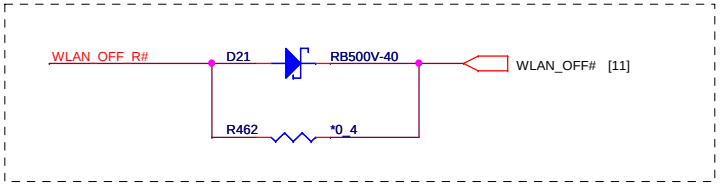

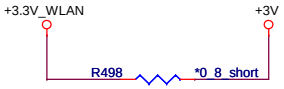

RF ON/OFF SWITCH

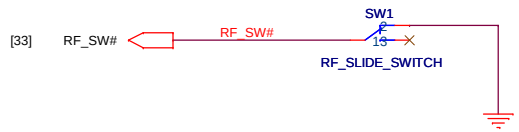

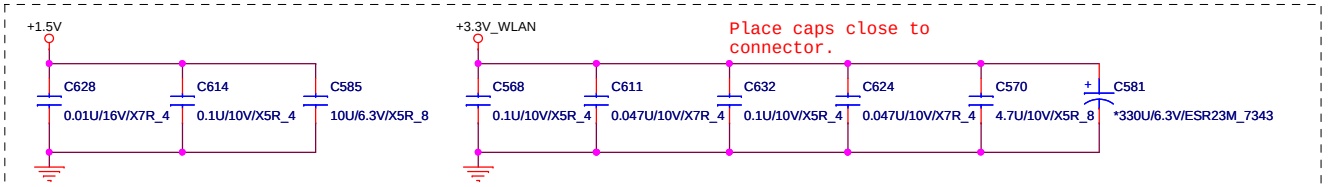

PROJECT : LL5A
Quanta Computer Inc.

Size	Document Number	Rev
Custom	MINI-Card (WLAN)	1B
Date: Tuesday, October 20, 2009	Sheet 30 of 43	

Express Card

[3,4,6,8,9,10,11,12,14,15,16,18,19,22,23,25,26,27,28,29,30,32,33,34,35,36,37,38,39,40,41,42] +3V
[3,17,21,29,30,39] +1.5V
[33,37,43] 3VSUS

+1.5V_CARD Max. 650mA, Average 500mA.
+3.3V_CARD Max. 1300mA, Average 1000mA.

[10] ICH_USBP2+
[10] ICH_USBP2-
L27
*DLW21HN900SQ2L
ICH_USBP2+
ICH_USBP2-

+1.5V +3V 3VSUS +3.3V_CARDAUX +3.3V_CARD +1.5V_CARD
U31
AUXIN AUXOUT
3.3VIN_0 3.3VOUT_0
3.3VIN_1 3.3VOUT_1
1.5VIN_0 1.5VOUT_0
1.5VIN_1 1.5VOUT_1
ExpressSwitch
SHDN# PERST#
STBY# CPPE#
SYSRST# CPUSB#
OC#
NC RCLKEN
GND0
G577BSR91U/ RT9716AGQW

3VSUS R447 *100K_4 2231_SHDN#
R446 *100K_4 2231_STBY#
[4,10,16,24,29,30,34] PLTRST#
CARD_RESET#
EXPRCRD_PWREN# R457 *100K_4
CPUSB# R456 *100K_4
T27
T29

CN11
GND_1
USB-
USB+
CPUSB#
RSV_0
RSV_1
SMBCLK
SMBDATA
+1.5V_0
+1.5V_1
WAKE#
+3.3VAUX
PERST#
+3.3V_1
+3.3V_2
CLKREQ#
CPPE#
REFCLK-
REFCLK+
GND_2
PERn0
PERp0
GND_3
PETn0
PETp0
GND_4 NC1 NC2 NC3 NC4 NC5
48303-0033
ICH_USBP2-
ICH_USBP2+
CPUSB#
+3.3V_CARDAUX
R482 10K_4
R477 10K_4
+1.5V_CARD
[8,30] PCIE_WAKE#
+3.3V_CARDAUX
CARD_RESET#
+3.3V_CARD
[10] CARD_CLK_REQ#
EXPRCRD_PWREN#
[10] CLK_PCH_SRC4_N
[10] CLK_PCH_SRC4_P
[10] PCIE_RX4-
[10] PCIE_RX4+
[10] PCIE_TX4-
[10] PCIE_TX4+
PCI-Express TX and RX direct to connector.
JAE PX10FS16PH-26P

+1.5V C598 0.1U/10V/X5R_4 10
Please the cap near pin 12 & 14(1.5VIN).

+3V C567 0.1U/10V/X5R_4 10
Please the cap near pin 2 & 4 (3.3VIN).

3VSUS C580 0.1U/10V/X5R_4 10
Please the cap near pin 17 (AUXIN).

+3.3V_CARDAUX C599 0.1U/10V/X5R_4
Please the cap near pin 15 (AUXOUT).

+3.3V_CARD C566 0.1U/10V/X5R_4
Please the cap near pin 3 & 5 (3.3VOUT).

+1.5V_CARD C597 0.1U/10V/X5R_4
Please the cap near pin 11 & 13(1.5VOUT).

+1.5V_CARD C615 0.1U/10V/X5R_4 C618 0.1U/10V/X5R_4
Please the cap near connector.

+3.3V_CARD C602 0.1U/10V/X5R_4 C601 0.1U/10V/X5R_4 C600 10U/6.3V/X5R_6
Please the cap near connector.

PROJECT : LL5A
Quanta Computer Inc.

Size	Document Number	Rev
Custom	Express Card	1B
Date: Tuesday, October 20, 2009	Sheet 31 of 43	

[3,4,6,8,9,10,11,12,14,15,16,18,19,22,23,25,26,27,28,29,30,31,33,34,35,36,37,38,39,40,41,42] +3V
[12,22,23,25,27,33,34,35,37,38] +5V

BLUETOOTH

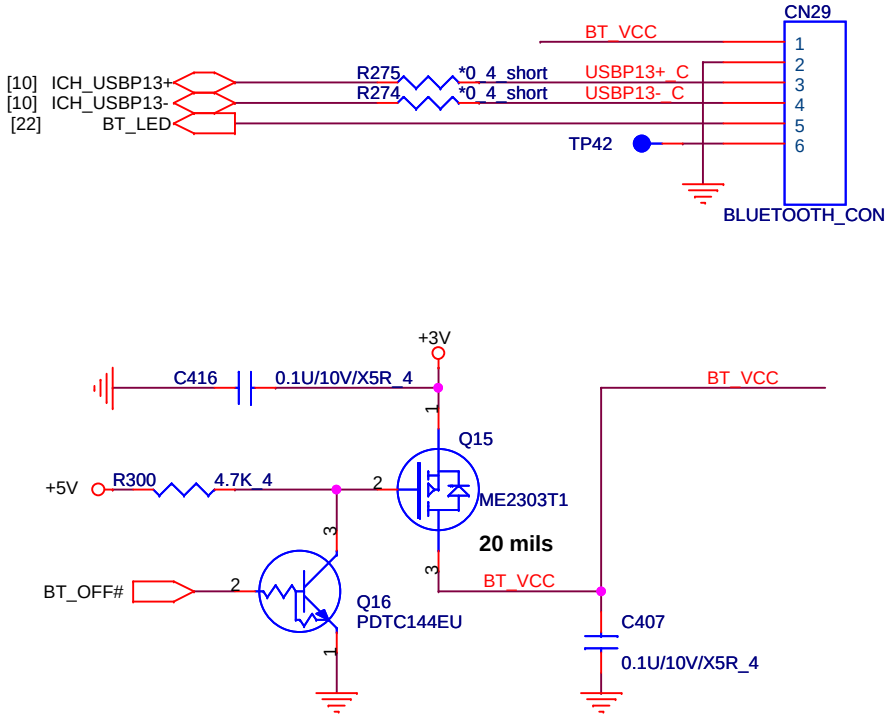

FINGER PRINTER

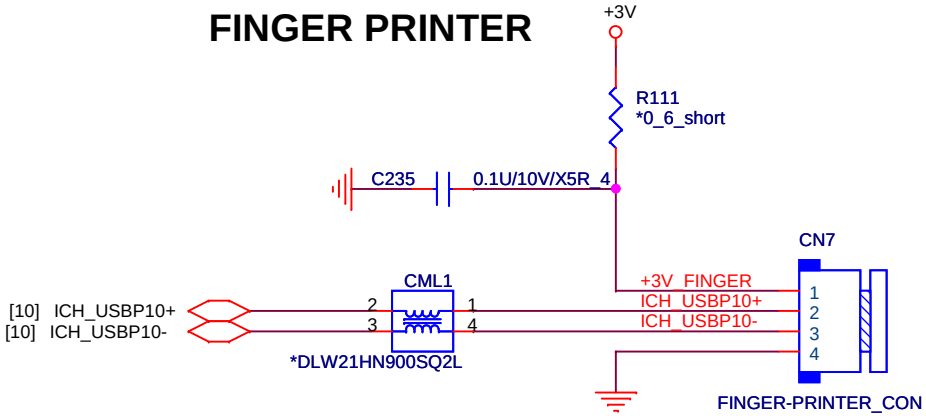

PROJECT : LL5A
Quanta Computer Inc.

Size	Document Number	Rev
Custom	BT/FP	1B
Date: Tuesday, October 20, 2009	Sheet 32 of 43	

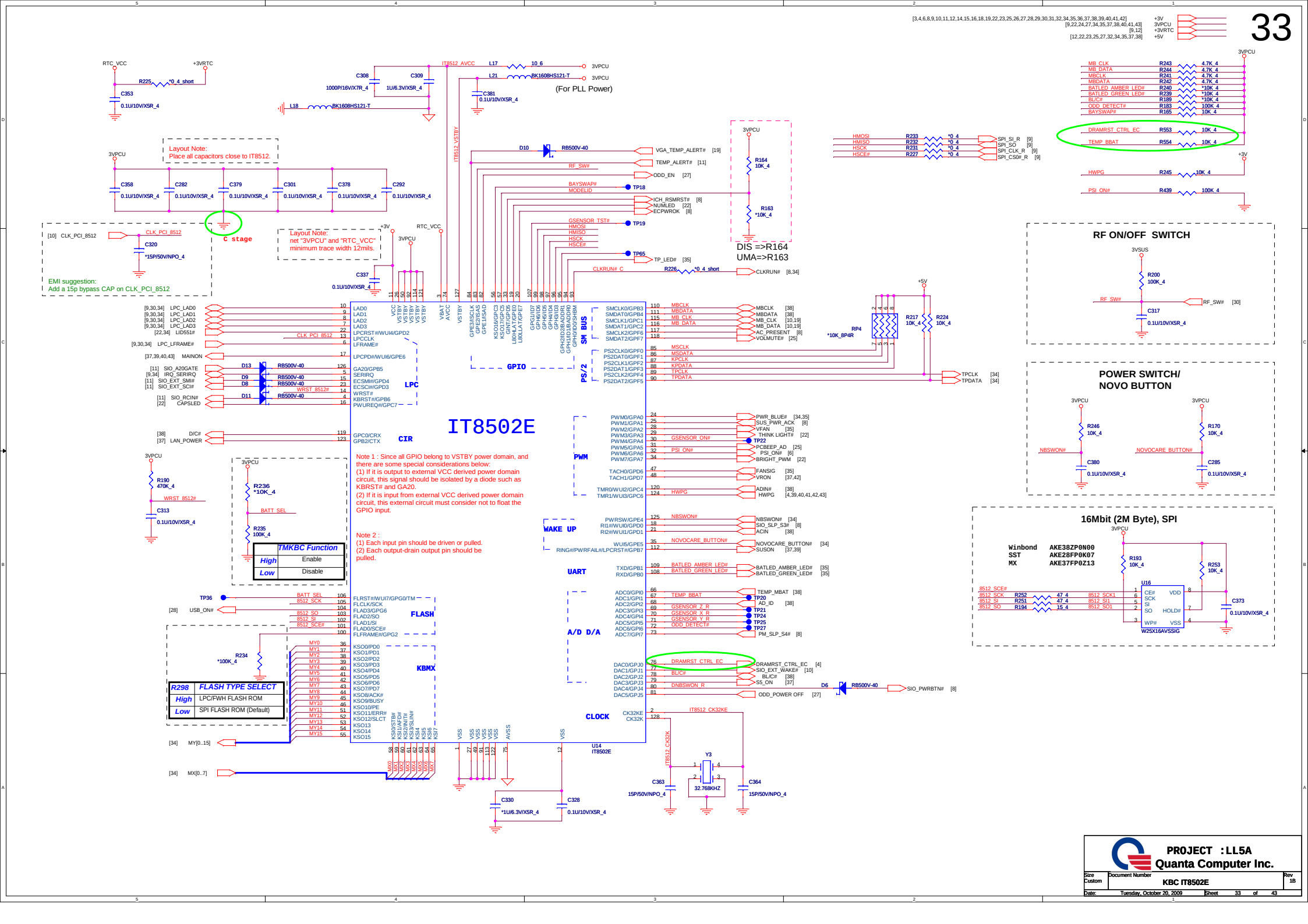

PROJECT : LL5A
Quanta Computer Inc.

Size	Document Number	Rev
Custom	KBC IT8502E	1B
Date: Tuesday, October 20, 2009	Sheet 33 of 43	

[9,22,24,27,33,35,37,38,40,41,43] 3VPCU
[12,22,23,25,27,32,33,35,37,38] +5V
[3,4,6,8,9,10,11,12,14,15,16,18,19,22,23,25,26,27,28,29,30,31,32,33,35,36,37,38,39,40,41,42] +3V

KEYBOARD

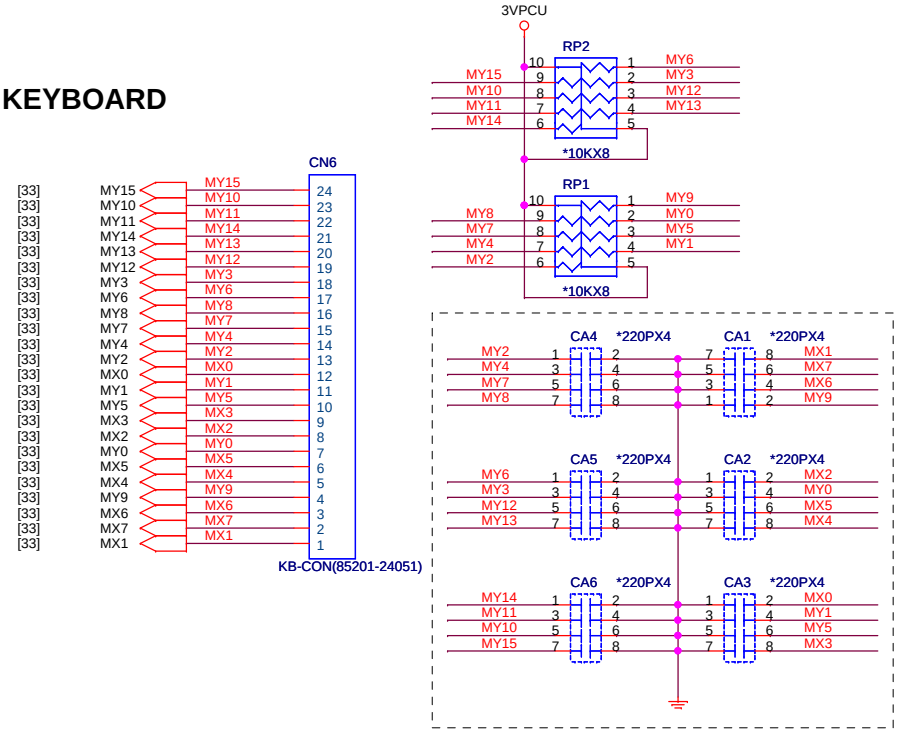

For EMI request

FUNCTION BUTTON BOARD

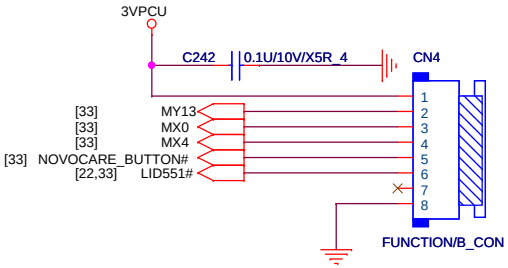

TOUCH PAD

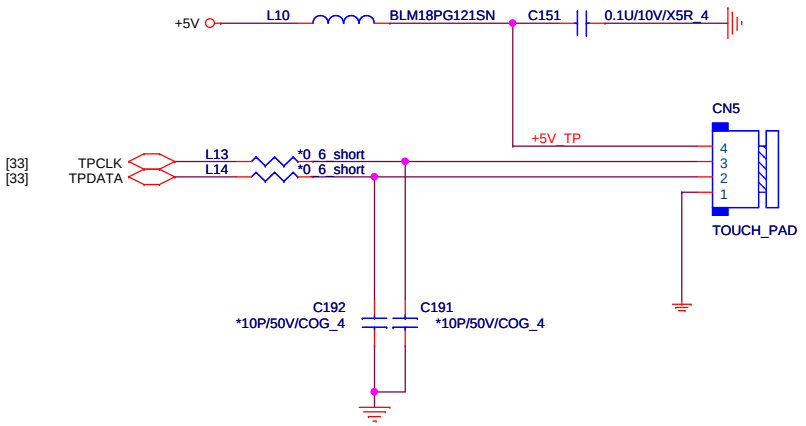

POWER BUTTON BOARD

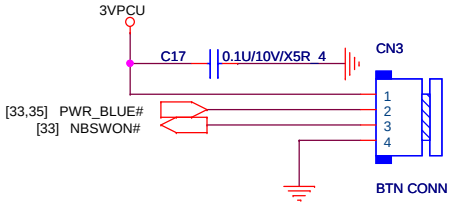

SIO BOARD

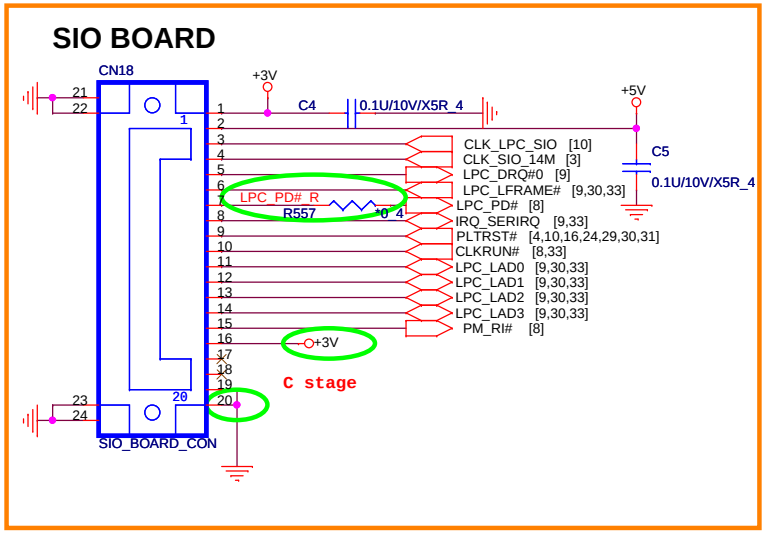

PROJECT : LL5A Quanta Computer Inc.		
Size Custom	Document Number KB/TP/PW-B/FN-B	Rev 1B
Date: Tuesday, October 20, 2009	Sheet 34 of 43	

LED

[3,4,6,8,9,10,11,12,14,15,16,18,19,22,23,25,26,27,28,29,30,31,32,33,34,36,37,38,39,40,41,42] +3V
[12,22,23,25,27,32,33,34,37,38] +5V

35

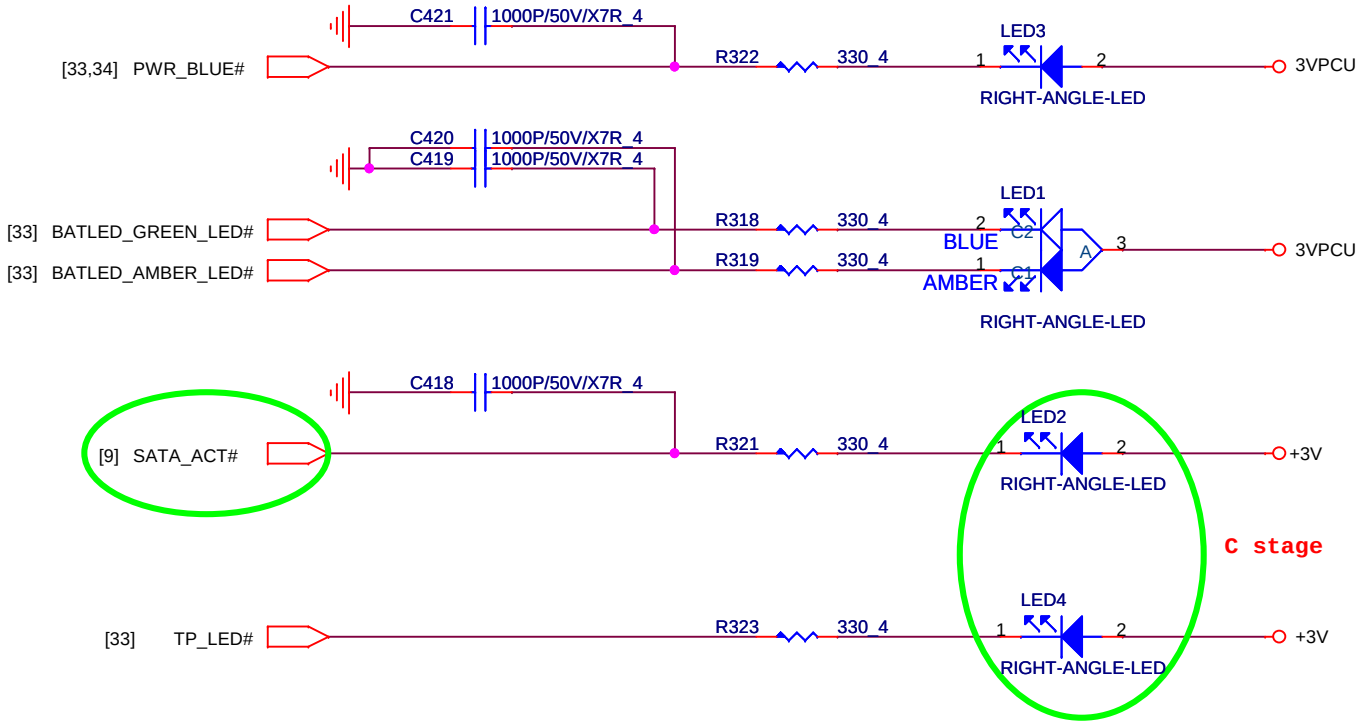

FAN CONTROL

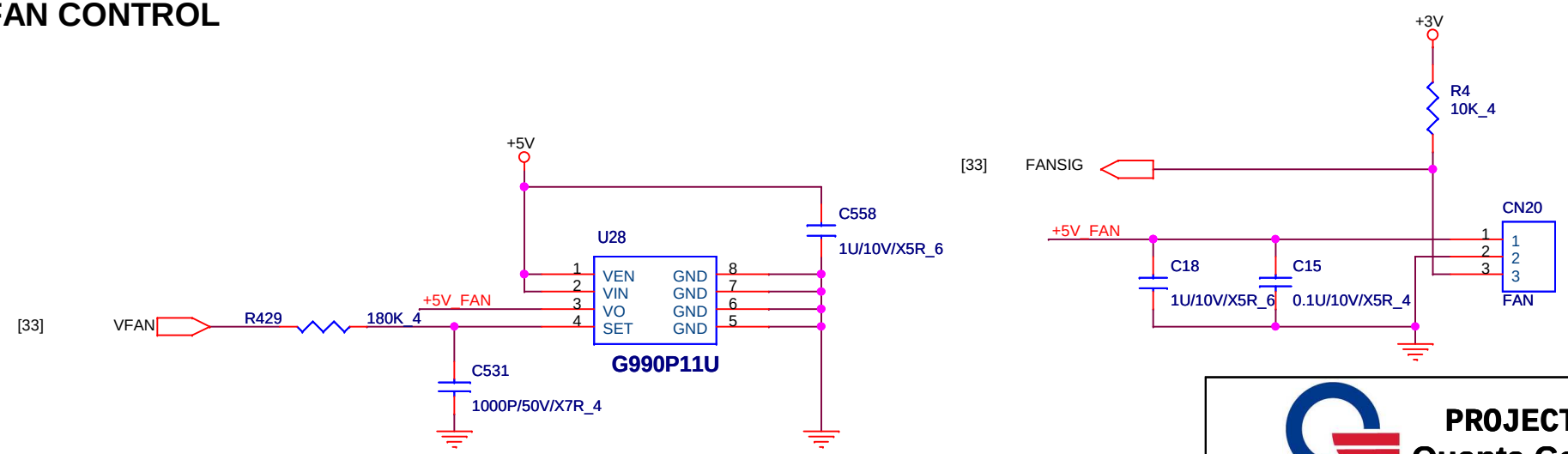

PROJECT : LL5A
Quanta Computer Inc.

Size	Document Number	Rev
Custom	LED/FAN	1B
Date: Tuesday, October 20, 2009	Sheet 35 of 43	

Hole for CPU support

HOLE8 *H-C142D142N
HOLE5 *H-C142D142N
HOLE7 *H-C142D142N

Hole for CPU Nut

HOLE4 H-TC216BC152D142NP2

VGA nut

HOLE19 H-TC238BC134D134P2
HOLE21 H-TC238BC134D134P2

Drink Hole

HOLE11 *H-C336D220P2
HOLE10 *H-C336D220P2

MINI CARD nut (WLAN)

HOLE26 h-tc256bc157d157p2
HOLE23 h-tc256bc157d157p2

MINI CARD nut (WWAN)

HOLE22 h-tc256bc157d157p2
HOLE25 h-tc256bc157d157p2

Hole for PCH Thermal

HOLE24 H-TC236BC134D134P2
HOLE27 H-TC236BC134D134P2

HOLE28 *SPAD-RE1110X350
HOLE20 *SPAD-RE240X330
HOLE36 *SPAD-RE80X200
PAD1 *Spad-re468x1426np

HOLE18 *H-C276D106P2
HOLE9 *H-C276D106P2
HOLE3 *H-C276D106P2
HOLE1 *H-C276D106P2
HOLE6 *H-C276D106P2
HOLE17 *H-C276D106P2
HOLE16 *H-C276D106P2
HOLE13 *O-K46-1
HOLE15 *H-C87D87N
HOLE2 *H-C87D87N
HOLE37 *SPAD-RE80X200
HOLE38 *SPAD-RE80X200
HOLE39 *SPAD-RE80X200

EMI Reserved

VIN C6 0.1U/25V/X5R_4
VIN C104 0.1U/25V/X5R_4
VIN C84 0.1U/25V/X5R_4
VIN C237 0.1U/25V/X5R_4
VIN C439 0.1U/25V/X5R_4
5VSUS C7 0.1U/10V/X5R_4
5VSUS C425 0.1U/10V/X5R_4
+1.8V C314 0.1U/10V/X5R_4
VBATT_A C650 0.01U/25V/X7R_4
VA1 C651 0.1U/10V/X5R_4

+3V C652 0.1U/25V/X5R_4
+3V C653 0.1U/25V/X5R_4
+3V C654 0.1U/25V/X5R_4
+3V C655 0.1U/25V/X5R_4
+VCC_GFX_CORE C656 680P/25V/X5R_4
+VCC_GFX_CORE C657 680P/25V/X5R_4
+VCC_GFX_CORE C659 2200P/50V/X7R_4
+VCC_GFX_CORE C658 2200P/50V/X7R_4
+VCC_GFX_CORE C660 2200P/50V/X7R_4
+VCC_GFX_CORE C661 2200P/50V/X7R_4

C stage

PROJECT : LL5A
Quanta Computer Inc.

Size	Document Number	Rev
Custom	HOLD & SKEW	1B
Date: Wednesday, October 21, 2009	Sheet 36 of 43	

+3V, +5V

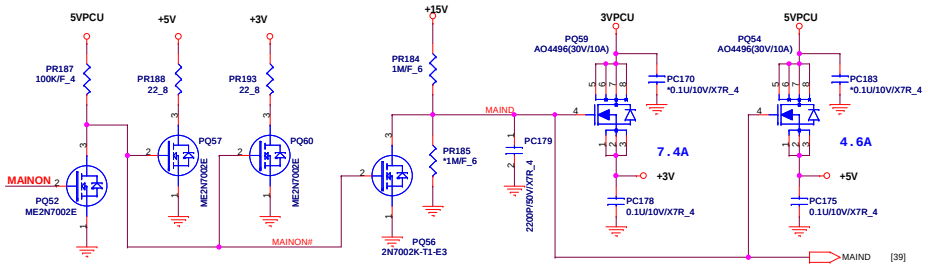

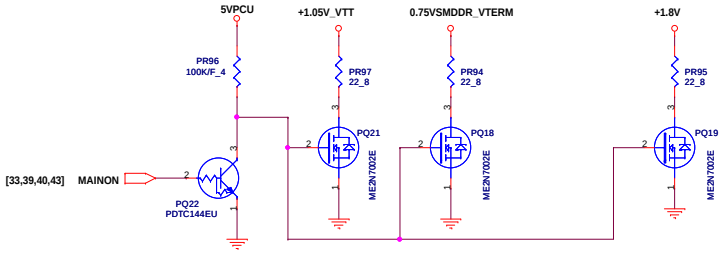

3V_S5, 5V_S5

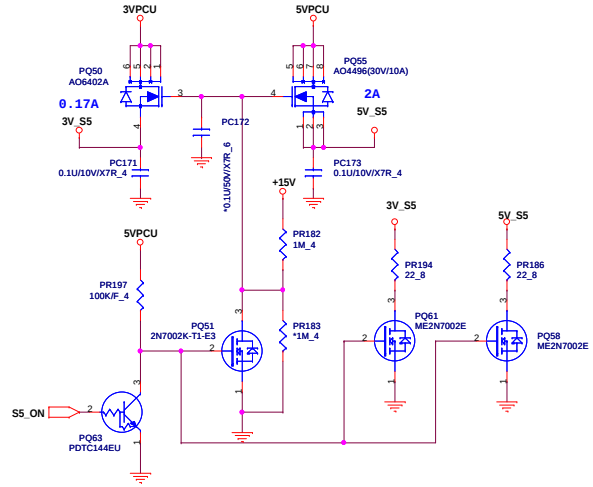

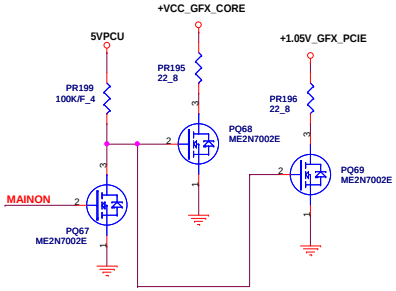

LANVCC

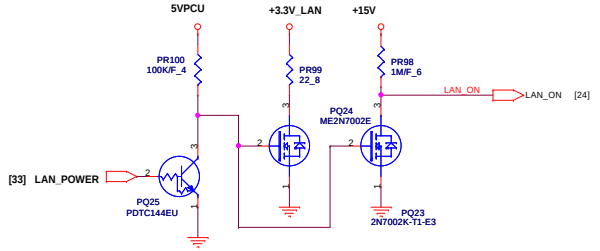

3VSUS, 5VSUS

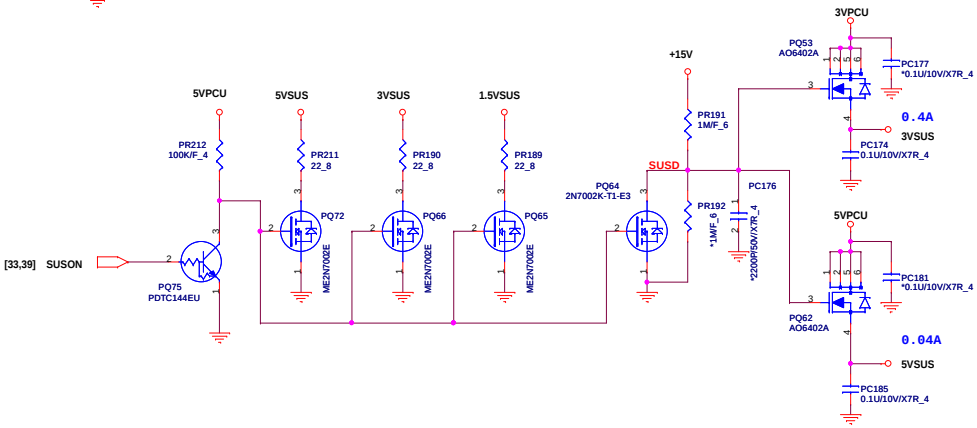

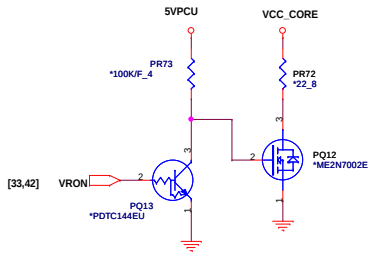

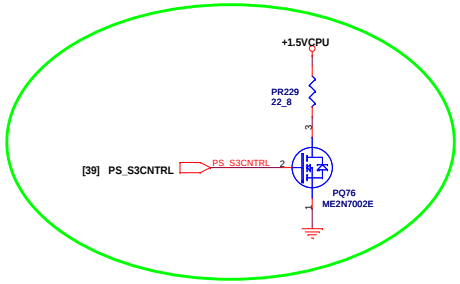

PROJECT : LL5A
Quanta Computer Inc.

Size	Document Number	Rev
Custom	Discharge	1B
Date: Tuesday, October 20, 2009	Sheet 37 of 43	

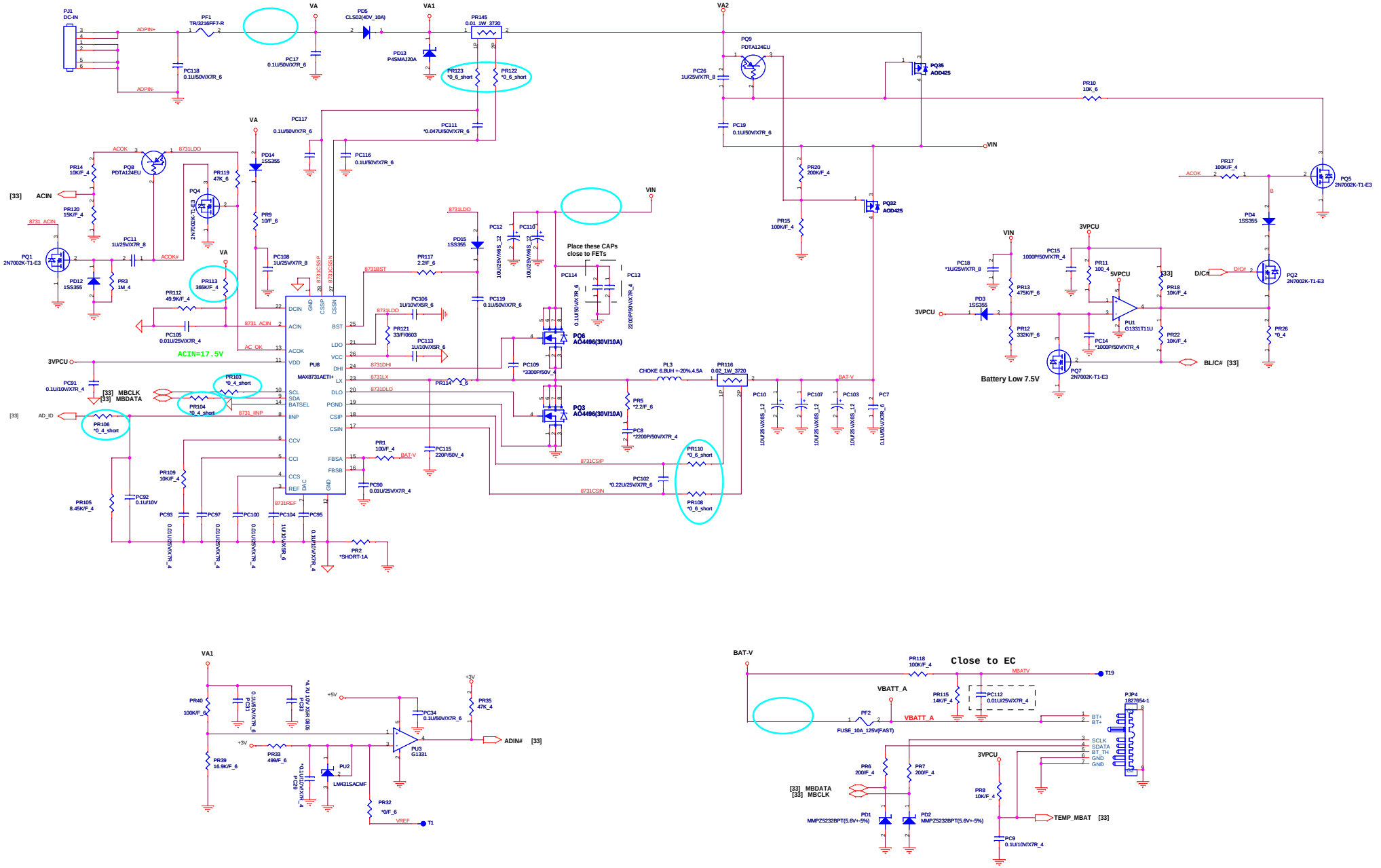

PROJECT : LL5A
Quanta Computer Inc.

Size	Document Number	Rev
Custom	Charger(MAX8731)	1B
Date: Tuesday, October 20, 2009	Sheet 38 of 43	

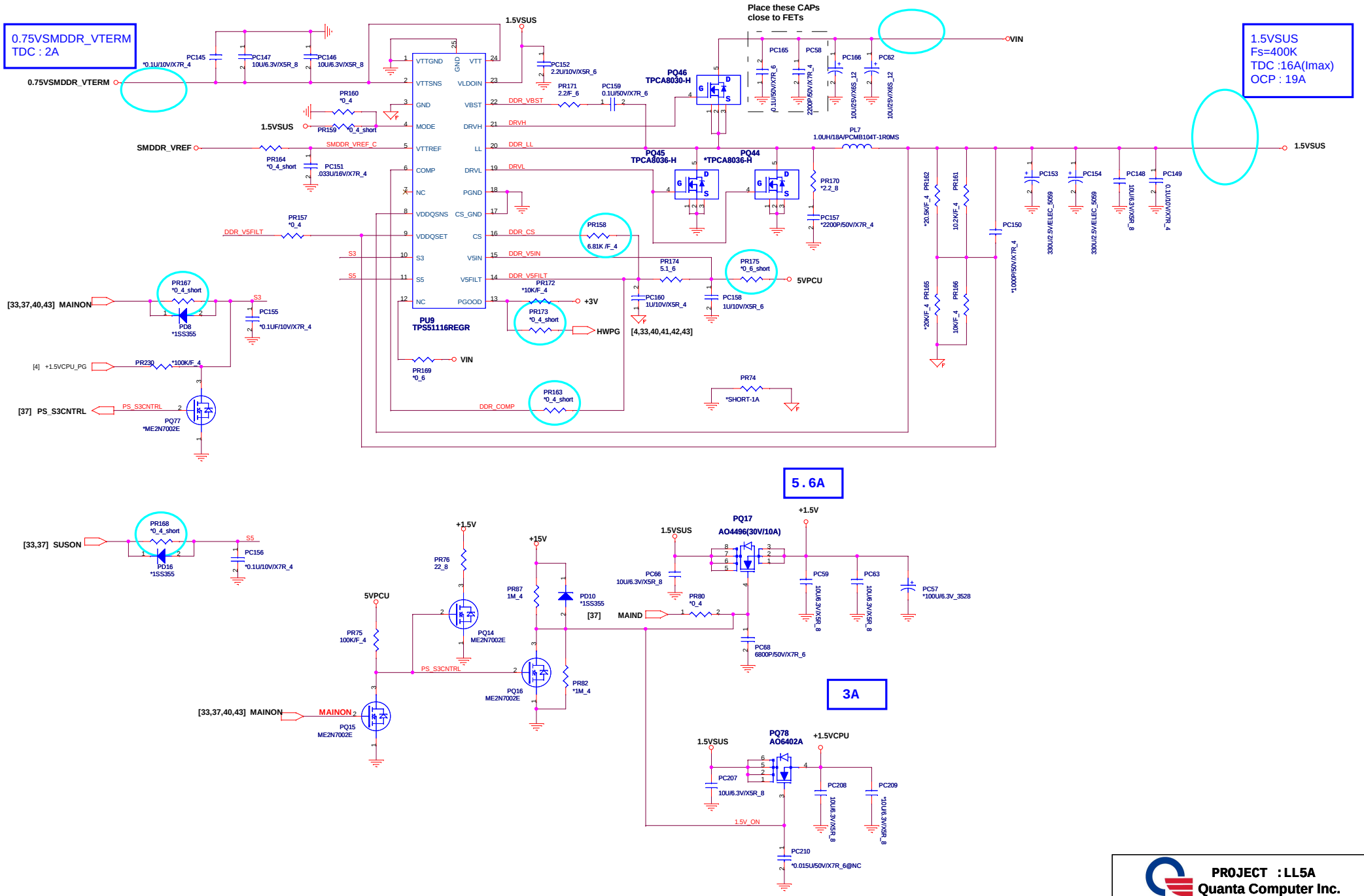
0.75VSMDDR_VTERM
TDC : 2A
1.5VSUS
Fs=400K
TDC :16A(Imax)
OCP : 19A
Place these CAPs close to FETs
PU9 TPS51116REGR
PQ45 TPCA8036-H
PQ44 *TPCA8036-H
PQ46 TPCA8030-H
PL7 1.0UH/18A/PCMB104T-1R0MS
5.6A
3A
PQ17 AO4496(30V/10A)
PQ78 AO6402A
PROJECT : LL5A
Quanta Computer Inc.
DDR3/0.75VSMDDR (TPS51116REGR)
Tuesday, October 20, 2009

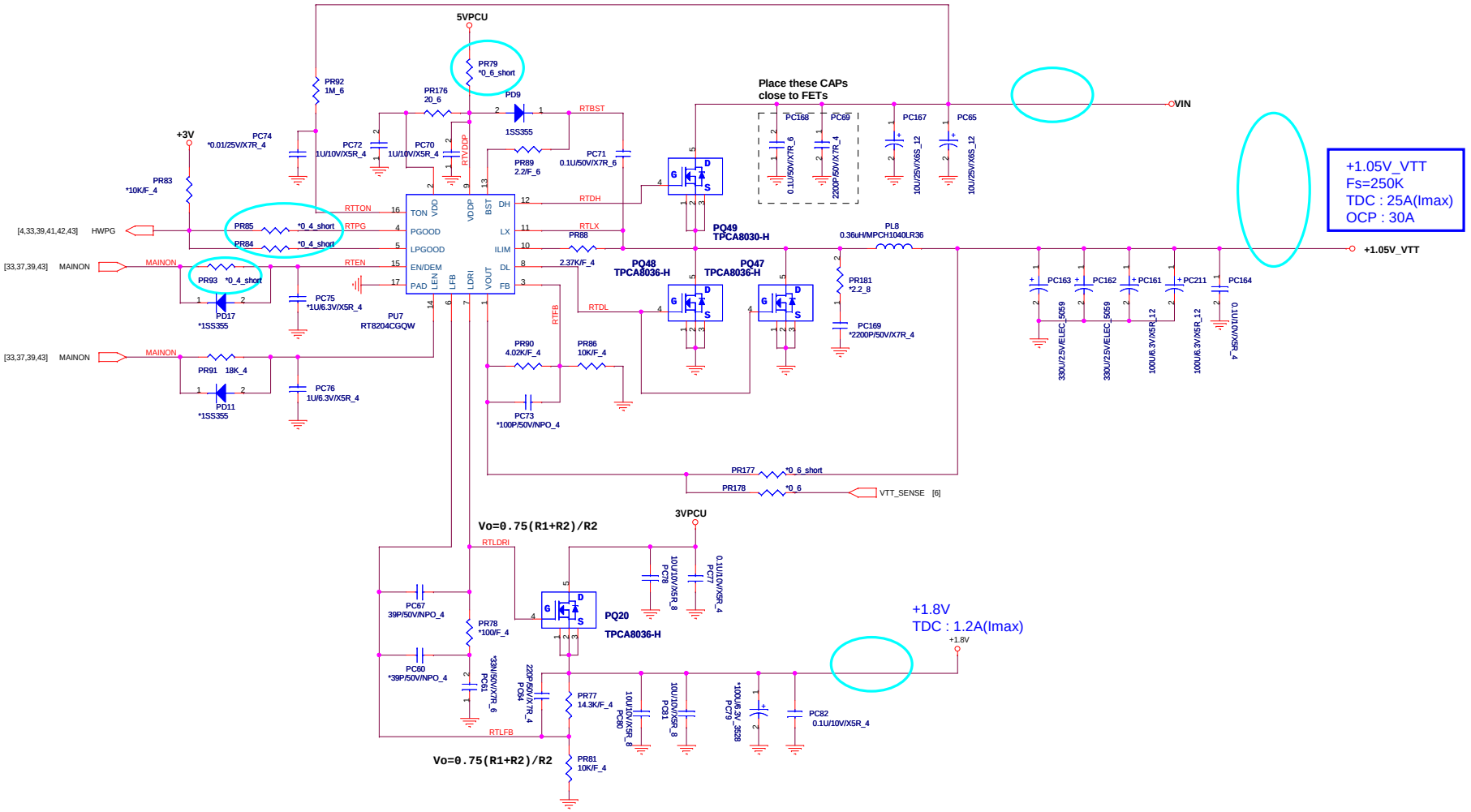

Quanta Computer Inc. PROJECT : LL5A		
Size: Custom	Document Number: 1.05V_VTT(RT8204) / 1.8V	Rev: 1B
Date: Tuesday, October 20, 2009	Sheet 40 of 43	

[9,22,24,27,33,34,35,37,38,40,43] 3VPCU
[9,27,37,38,39,40,43] 5VPCU
[22,27,37,39] +15V
[22,36,38,39,40,42,43] VIN

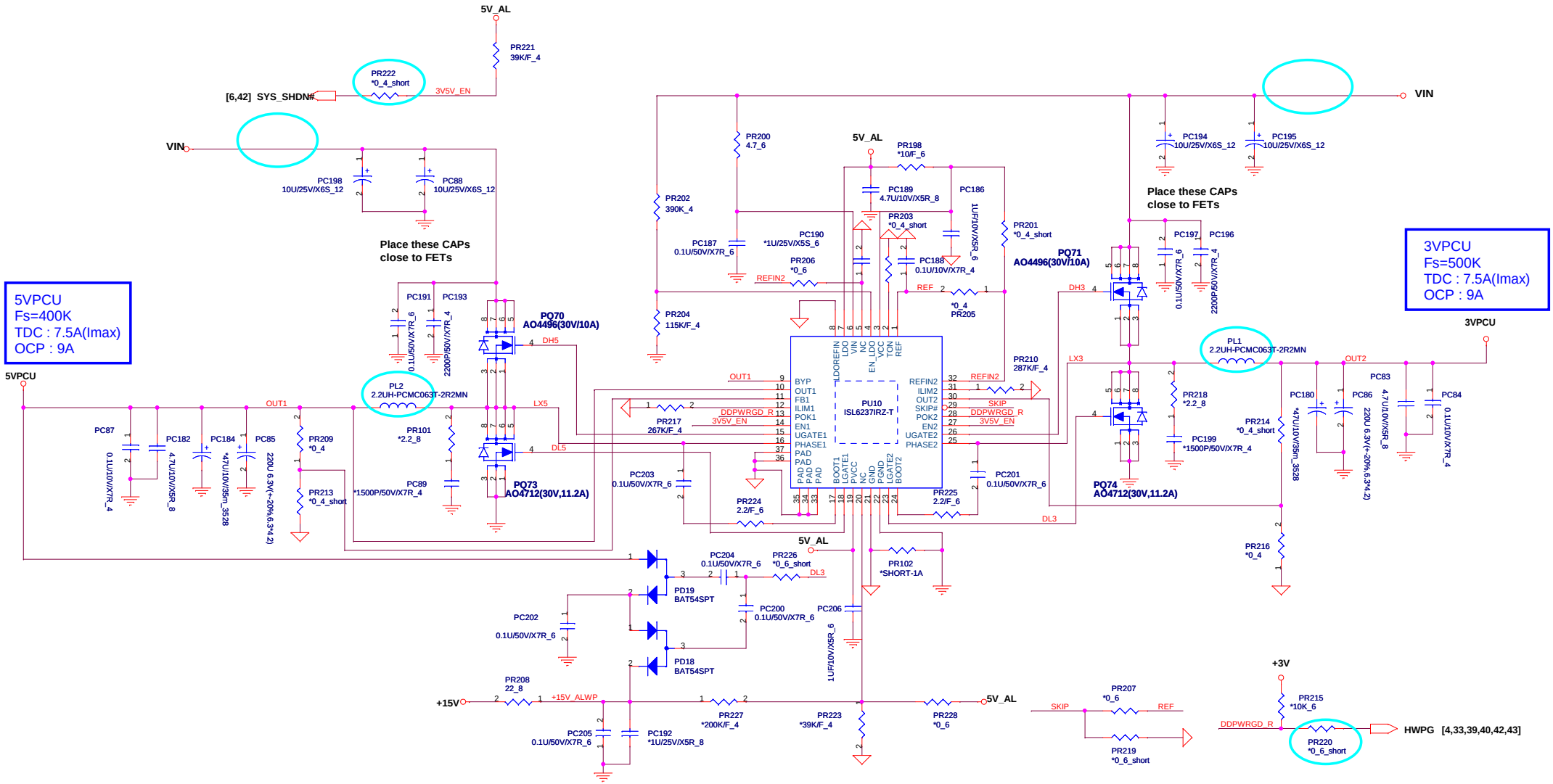

PROJECT	: LL5A
Quanta Computer Inc.	
Size: Custom	Document Number: 3V/5V (ISL6237IRZ-T)
Rev	1B
Date: Tuesday, October 20, 2009	Sheet 41 of 43

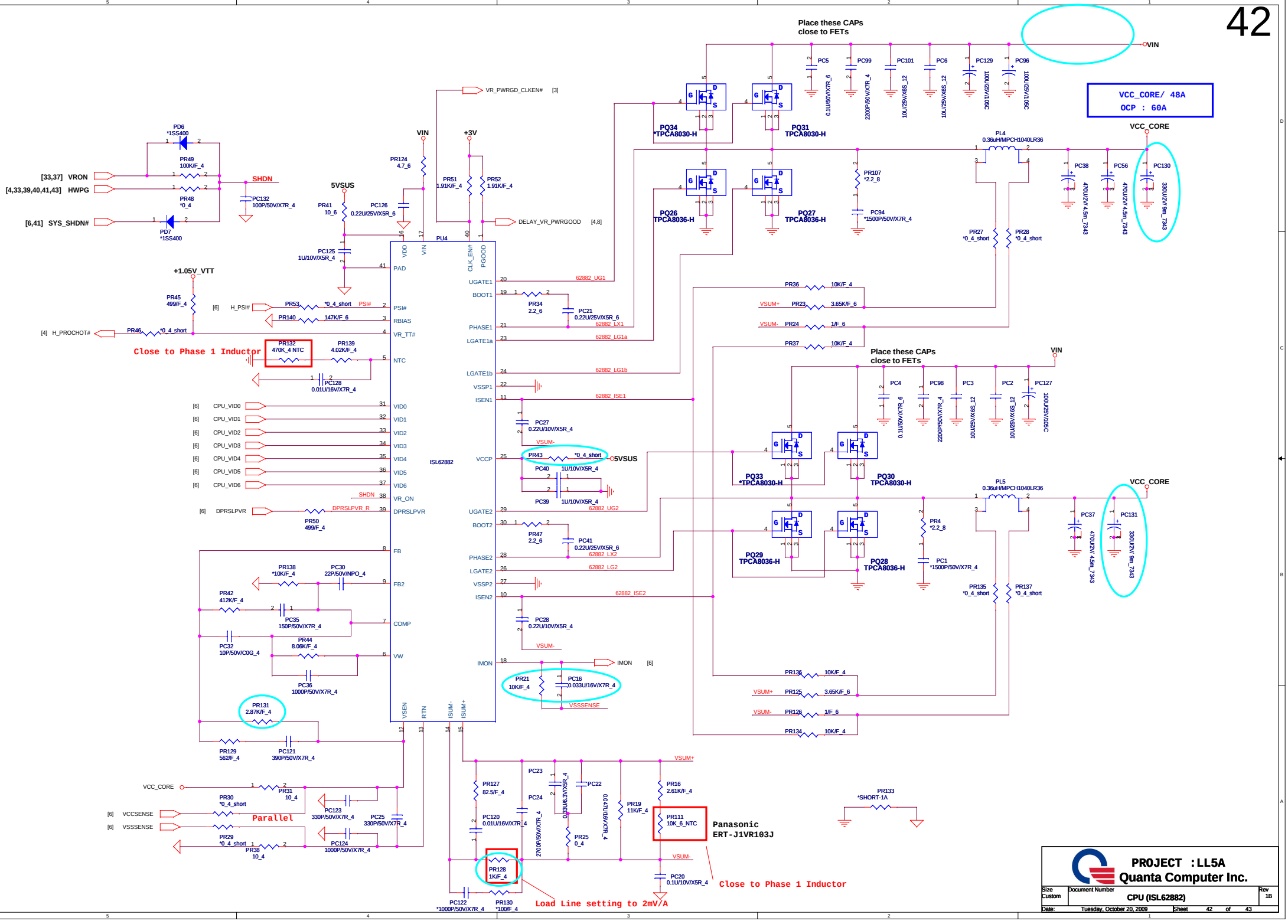
42
Place these CAPs close to FETs
VIN
VCC_CORE/ 48A
OCP : 60A
VCC_CORE
PQ34 *TPCA8030-H
PQ31 TPCA8030-H
PQ26 TPCA8036-H
PQ27 TPCA8036-H
PQ33 *TPCA8030-H
PQ30 TPCA8030-H
PQ29 TPCA8036-H
PQ28 TPCA8036-H
PL4 0.36uH/MPCH1040LR36
PL5 0.36uH/MPCH1040LR36
PC5 0.1U/50V/X7R_6
PC99 2200P/50V/X7R_4
PC101 10U/25V/X6S_12
PC6 10U/25V/X6S_12
PC129 100U/25V/105C
PC96 100U/25V/105C
PC38 470U/2V/ 4.5m_7343
PC56 470U/2V/ 4.5m_7343
PC130 330U/2V/ 9m_7343
PR107 *2.2_8
PC94 *1500P/50V/X7R_4
PR27 *0_4_short
PR28 *0_4_short
PR36 10K/F_4
PR23 3.65K/F_6
PR24 1/F_6
PR37 10K/F_4
PC4 0.1U/50V/X7R_6
PC98 2200P/50V/X7R_4
PC3 10U/25V/X6S_12
PC2 10U/25V/X6S_12
PC127 100U/25V/105C
PC37 470U/2V/ 4.5m_7343
PC131 330U/2V/ 9m_7343
PR4 *2.2_8
PC1 *1500P/50V/X7R_4
PR135 *0_4_short
PR137 *0_4_short
PR136 10K/F_4
PR125 3.65K/F_6
PR126 1/F_6
PR134 10K/F_4
VSUM+
VSUM-
PD6 *1SS400
PR49 100K/F_4
PR48 *0_4
PD7 *1SS400
[33,37] VRON
[4,33,39,40,41,43] HWPG
[6,41] SYS_SHDN#
SHDN
PC132 100P/50V/X7R_4
5VSUS
PR41 10_6
PC126 0.22U/25V/X5R_6
PC125 1U/10V/X5R_4
PR124 4.7_6
VR_PWRGD_CLKEN# [3]
+3V
PR51 1.91K/F_4
PR52 1.91K/F_4
DELAY_VR_PWRGOOD [4,8]
PU4
ISL62882
VDD
VIN
CLK_EN#
PGOOD
PAD
UGATE1
BOOT1
PHASE1
LGATE1a
LGATE1b
VSSP1
ISEN1
VCCP
UGATE2
BOOT2
PHASE2
LGATE2
VSSP2
ISEN2
IMON
VSEN
RTN
ISUM-
ISUM+
+1.05V_VTT
PR45 499/F_4
[6] H_PSI#
PR53 *0_4_short
PSI#
PR140 147K/F_6
[4] H_PROCHOT#
PR46 *0_4_short
PR132 470K_4 NTC
PR139 4.02K/F_4
PC128 0.01U/16V/X7R_4
Close to Phase 1 Inductor
[6] CPU_VID0
[6] CPU_VID1
[6] CPU_VID2
[6] CPU_VID3
[6] CPU_VID4
[6] CPU_VID5
[6] CPU_VID6
VID0
VID1
VID2
VID3
VID4
VID5
VID6
VR_ON
[6] DPRSLPVR
DPRSLPVR_R
PR50 499/F_4
PR138 *10K/F_4
PC30 22P/50V/NPO_4
PR42 412K/F_4
PC35 150P/50V/X7R_4
PC32 10P/50V/C0G_4
PR44 8.06K/F_4
PC36 1000P/50V/X7R_4
PR131 2.87K/F_4
PR129 562/F_4
PC121 390P/50V/X7R_4
VCC_CORE
PR31 10_4
PR30 *0_4_short
[6] VCCSENSE
[6] VSSSENSE
Parallel
PC123 330P/50V/X7R_4
PC25 330P/50V/X7R_4
PR29 *0_4_short
PR38 10_4
PC124 1000P/50V/X7R_4
62882_UG1
PR34 2.2_6
PC21 0.22U/25V/X5R_6
62882_LX1
62882_LG1a
62882_LG1b
62882_ISE1
PC27 0.22U/10V/X5R_4
PR43 *0_4_short
PC40 1U/10V/X5R_4
PC39 1U/10V/X5R_4
62882_UG2
PR47 2.2_6
PC41 0.22U/25V/X5R_6
62882_LX2
62882_LG2
62882_ISE2
PC28 0.22U/10V/X5R_4
PR21 10K/F_4
PC16 0.033U/16V/X7R_4
VSSSENSE
PR127 82.5/F_4
PC120 0.01U/16V/X7R_4
PC23 2700P/50V/X7R_4
PC24 0.33U/6.3V/X5R_4
PC22 0.047U/16V/X7R_4
PR25 0_4
PR19 11K/F_4
PR16 2.61K/F_4
PR111 10K_6_NTC
Panasonic ERT-J1VR103J
PR133 *SHORT-1A
PR128 1K/F_4
PC20 0.1U/10V/X5R_4
Close to Phase 1 Inductor
PC122 *1000P/50V/X7R_4
PR130 *100/F_4
Load Line setting to 2mV/A
PROJECT : LL5A
Quanta Computer Inc.
Size Custom
Document Number CPU (ISL62882)
Rev 1B
Date: Tuesday, October 20, 2009
Sheet 42 of 43

For Descrete N10M VGA Only

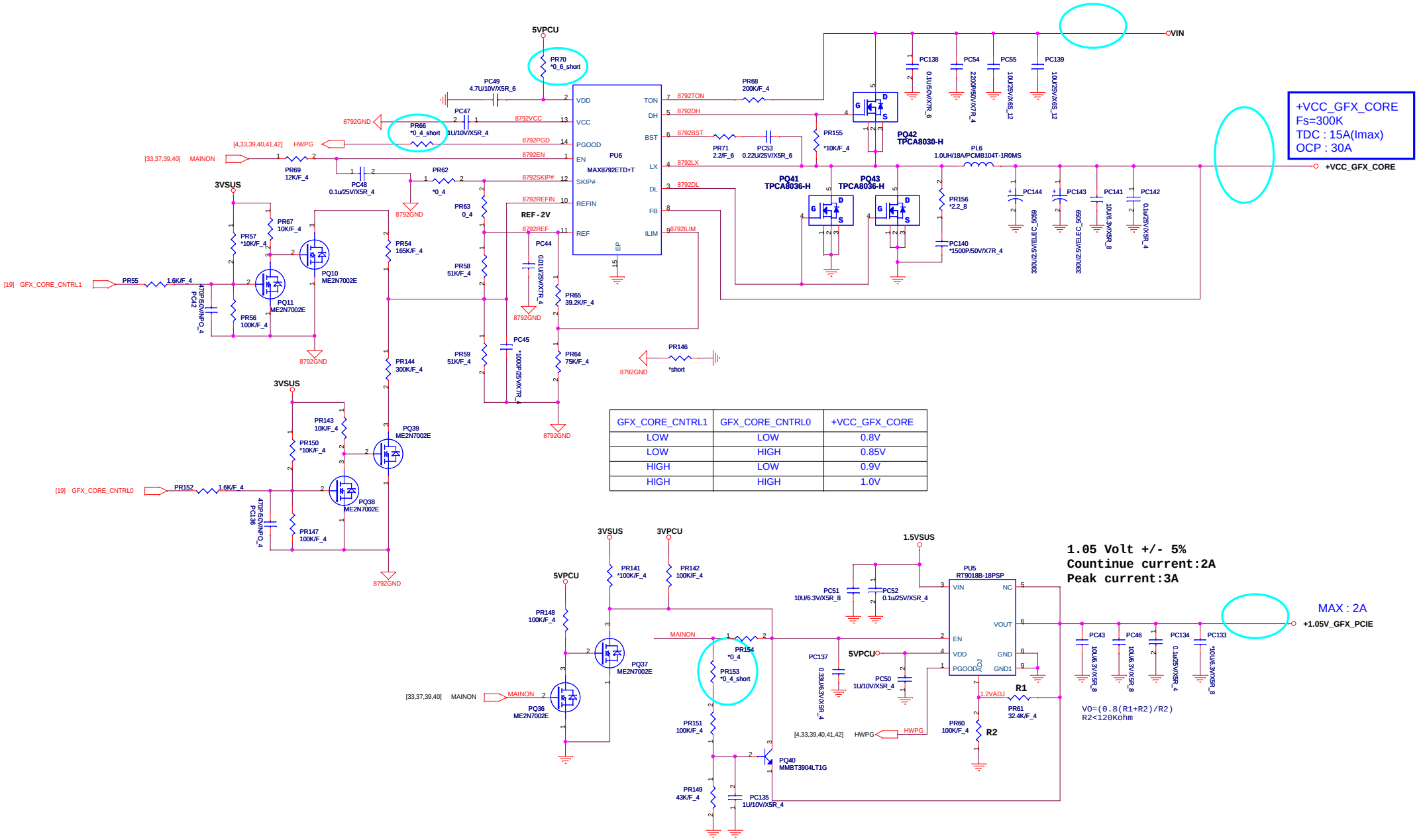

PROJECT : LL5A		
Quanta Computer Inc.		
Size: Custom	Document Number: DIS_GFX_VCC (MAX8792)	Rev: 1B
Date: Tuesday, October 20, 2009	Sheet 43 of 43	