MLB-1 NV EXT SVT LOGIC SCHEMATICS

	DATE	EC NO.	PART NO.
	20061220	L11403	42W7622
			DEVELOPMENT NO.
			Q/M 1 / 97

1. TITLE PAGE
2. EC HISTORY
3. CPU(1/3)
4. CPU(2/3)
5. CPU(3/3)
6. ITP CON/LARGE PTH HOLE/EMI FINGER
7. CRESTLINE(1/7) : HOST I/F
8. CRESTLINE(2/7) : DDR2-A
9. CRESTLINE(3/7) : DDR2-B
10. CRESTLINE(4/7) : PEG/DMI
11. CRESTLINE(5/7) : GRAPHICS
12. CRESTLINE(6/7) : VCC
13. CRESTLINE(7/7) : GND
14. POWER FOR CRESTLINE
15. DDR2 SODIMM-A
16. DDR2 SODIMM-B
17. DDR2 TERMINATION
18. DDR2 DECOUPLING
19. CLOCK GEN(ICS954309)
20. NV NB8M-GS : PEG I/F
21. NV NB8M-GS : LVDS/CRT/TV/TMDS
22. NV NB8M-GS : CLK/GPIO
23. NV NB8M-GS : ANALOG POWER
24. NV NB8M-GS : VCC
25. NV NB8M-GS : GND
26. DYNAMIC MEMORY TERMINATION
27. VRAM FOR ATI M6X CHANNEL-A
28. LCD CONNECTOR
29. EXT CRT INTERFACE
30. PATA I/F PU
31. ICH8-M(1/4) : DMI/PCI/LPC/AC97
32. ICH8-M(2/4) : ATA/USB/PM
33. ICH8-M(3/4) : PCI EXPRESS
34. ICH8-M(4/4) : VCC/GND
35. FWH,RTC BATTERY
36. SATA HDD CONN
37. BAY I/F CONN
38. USB POWER/CONN
39. AUDIO AD1981HD
40. AUDIO MISC
41. AUDIO INT MIC
42. AUDIO HP & EXT MIC CONN
43. AUDIO EXT MIC AMP
44. AUDIO SPEAKER
45. AUDIO HDP AMP MAX9789A(1/2)
46. AUDIO HDP AMP MISC(2/2)
47. CDC CONNECTOR
48. CARDBUS CONTROLLER(1/2)
49. CARDBUS CONTROLLER(2/2)
50. CARDBUS/EXC SLOT
51. CARDBUS/EXC PWR CTRL
52. GBE LAN SW
53. GBE NINEVEH(1/2)
54. BLANK PAGE
55. GBE MAGNETICS
56. RJ11/RJ45 CONNECTOR
57. MINI PCI SLOT
58. EEPROM/FLASH/SHARED
59. DOCKING CONNECTOR
60. H8S/2116B (1/2)
61. H8S/2116B (2/2)
62. KEYBOARD CONNECTOR
63. TOUCH PAD CONNECTOR
64. MISC G/A (PMH7)
65. SUPER I/O (PC87385)
66. WIRELESS DISABLE SW
67. LEGACY IO INTERFACE
68. BLANK PAGE
69. THERMAL SENSOR
70. I2CBUS/SMBUS
71. FAN CONTROL
72. G-SENSOR
73. EMC DECOUPLING
74. RGB SWITCH
75. DC-IN
76. BATTERY CHARGER (MAX8765)
77. CHARGE SELECTOR
78. BATTERY INPUT
79. BATTERY MONITOR
80. POWER SEQUENCE
81. DC-DC VCC3M/VCC5M (MAX8774)
82. DC-DC VCCCPUCORE (ADP3207)
83. VCCCPUCORE DECOUPLING
84. DC-DC VCC1R05M
85. DC-DC VCCGFXCORE(MAX1993)
86. DC-DC VCC1R8M/VCC0R9A (MAX8632)
87. DC-DC VCC1R05B/VCC1R5M (MAX1540)
88. DC-DC VCC1R25AMT (VT322)
89. LOAD SW AMT
90. PWRG
91. RINKAI-1
92. LOAD SW VIDEO
93. LOAD SW AUX1,AUX2
94. LOAD SW B&UBAY
95. MAX POWER CTRL
96. POWER MOMITOR
97. PTH FOR SCREW HOLES

VER 2.27

JANUARY/31/2007

DESIGNER	K.Y	06/01/06	PART NO. 42W7622
CHECKED	Y.I	06/01/06	
APPROVED	T.S	06/01/06	TITLE MLB-1 SVT
CLASS	T.S	06/01/06	TITLE PAGE

THIS DOCUMENT IS THE PROPERTY OF LENOVO.ITS USE IS AUTHORIZED ONLY FOR RESPONDING TO A REQUEST FOR QUOTATION OR FOR THE PERFORMANCE OF WORK FOR LENOVO.ALL QUESTIONS MUST BE REFERRED TO THE LENOVO PURCHASING DEPARTMENT.

LENOVO CONFIDENTIAL

EC HISTORY

	DATE	EC NO.	PART NO.
	20061220	L11403	42W7622
			DEVELOPMENT NO. / Q/M: 2 / 97

SDV (BASE LOGIC DAV3 SDV VER.1.16)

VER.0.01	06/05/2006	APPLIED	DAV3_SDV 081
VER.0.01	06/05/2006	APPLIED	MLB_SDV 001
VER.0.02	06/07/2006	APPLIED	DAV3_FVT 005,006,009
VER.0.03	06/05/2006	APPLIED	DAV3_SDV 084,085
VER.0.03	06/05/2006	APPLIED	DAV3_FVT 013
VER.0.04	06/14/2006	APPLIED	DAV3_SDV 086
VER.0.04	06/14/2006	APPLIED	DAV3_FVT 018,015,014,011
VER.0.05	06/15/2006	APPLIED	DAV3_FVT 028
VER.0.06	06/16/2006	APPLIED	DAV3_SDV 003,036,035,032
VER.0.07	06/19/2006	APPLIED	DAV3_FVT 038,039
VER.0.08	06/20/2006	APPLIED	DAV3_FVT 040,039,020,003
VER.0.09	06/21/2006	APPLIED	DAV3_FVT 039,038,036,006,041
VER.0.10	06/21/2006	APPLIED	DAV3_SDV 007
VER.0.11	06/23/2006	APPLIED	DAV3_SDV 011-009
VER.0.12	06/24/2006	APPLIED	DAV3_FVT 051-047,045
VER.0.13	06/26/2006	APPLIED	DAV3_SDV 012
VER.0.14	06/27/2006	APPLIED	DAV3_FVT 054-57&SIV 01(EXCEPT 053)
VER.0.15	06/28/2006	APPLIED	DAV3_FVT 053,054-57&SIV 01
VER.0.16	07/01/2006	APPLIED	DAV3_SDV013-014&FVT063
VER.0.17	07/04/2006	APPLIED	DAV3_SDV015-016
VER.0.18	07/05/2006	APPLIED	DAV3_SDV017-018&SIV005,007
VER.0.19	07/07/2006	APPLIED	DAV3_FVT069&SIV011
VER.0.20	07/11/2006	APPLIED	DAV3_SDV019,021,20-2&SIV012-013,020
VER.0.21	07/13/2006	APPLIED	DAV3_SDV022-025&SIV024
VER.0.22	07/21/2006	APPLIED	DAV3_SIV028,032,034&FVT075,080,083-084 SDV027-029,031

SIV (BASE LOGIC MLB-1 EXT SDV VER.0.22)

VER.1.00	08/25/2006	APPLIED	DAV3_SIV0140,017,026,031,038-040,042-045,047,051-052)
VER.1.00	08/25/2006	APPLIED	DAV3_SIV054-055,057,060-061,063-065,067-076)
VER.1.00	08/25/2006	APPLIED	DAV3_SIV078-084,086,094-095,097-098,100)
VER.1.00	08/25/2006	APPLIED	DAV3_SIV103-104,108-109,113,114,117,119-124)
VER.1.00	08/25/2006	APPLIED	MLB1_SIV001,006,009
VER.1.01	08/25/2006	APPLIED	DAV3_SIV016,089,090,096,099,101,115,118,127-130,133)
VER.1.01	08/25/2006	APPLIED	MLB1_SIV002-005,007,008,010,011,013,017,018)
VER.1.02	09/04/2006	APPLIED	MLB1_SIV026,048,056,058,059,116,126,132,134,135-137)
VER.1.02	09/04/2006	APPLIED	MLB1_SIV007,012,014-016,019-041,043-046)
VER.1.03	09/07/2006	APPLIED	MLB1_SIV047-057)
VER.1.04	09/12/2006	APPLIED	DAV3_SIV138,139,141)
VER.1.04	09/12/2006	APPLIED	MLB1_SIV058,059)
VER.1.05	09/13/2006	APPLIED	DAV3_SIV143,145,146)
VER.1.05	09/13/2006	APPLIED	MLB1_SIV060)
VER.1.06	09/15/2006	APPLIED	MLB1_SIV063,065-068)

SIV NV (BASE LOGIC MLB-1 EXT SDV VER.1.06)

VER.1.00	10/11/2006	APPLIED	MLB1_NV_002-006)
VER.1.00	10/11/2006	APPLIED	DAV3_NV_001,003-009,010-012,015-020,023,030,031,35)
VER.1.01	10/12/2006	APPLIED	MLB1_NV_001)
VER.1.01	10/12/2006	APPLIED	DAV3_NV_013,034,036,039,040)
VER.1.01	10/12/2006	APPLIED	DAV3_SIT_008,009,012,014,015,017,020-022)
VER.1.01	10/12/2006	APPLIED	DAV3_SIT_025-027,030,032,034,036)
VER.1.02	10/13/2006	APPLIED	MLB1_SIT_013,011)
VER.1.02	10/13/2006	APPLIED	DAV3_NV_041)
VER.1.03	10/14/2006	APPLIED	MLB1_NV_007-010)
VER.1.03	10/14/2006	APPLIED	DAV3_SIT_004)
VER.1.03	10/14/2006	APPLIED	MLB1_SIT_015)
VER.1.04	10/17/2006	APPLIED	MLB1_NV_011-014)
VER.1.04	10/17/2006	APPLIED	DAV3_NV_042-044)
VER.1.05	10/19/2006	APPLIED	MLB1_NV_016,017,019)
VER.1.05	10/19/2006	APPLIED	MLB1_SIT_016,017,019,020)
VER.1.05	10/19/2006	APPLIED	DAV3_NV_049,052)
VER.1.05	10/19/2006	APPLIED	DAV3_SIT_040,041)
VER.1.06	10/24/2006	APPLIED	DAV3_NV_037)
VER.1.06	10/24/2006	APPLIED	DAV3_SIT_038)
VER.1.06	10/24/2006	APPLIED	MLB1_NV_020-022)
VER.1.07	10/25/2006	APPLIED	MLB1_SIT_016,017,019,020,023)
VER.1.08	10/26/2006	APPLIED	MLB1_SIT_001,006,014,018,021,025)
VER.1.08	10/26/2006	APPLIED	DAV3_NV_051)
VER.1.08	10/26/2006	APPLIED	MLB1_NV_015,018)
VER.1.09	10/31/2006	APPLIED	MLB1_SIT_029,030)
VER.1.09	10/31/2006	APPLIED	MLB1_NV_024-026)
VER.1.09	10/31/2006	APPLIED	DAV3_SIT_042,047,061)
VER.1.09	10/31/2006	APPLIED	DAV3_NV_067)

DV6 (BASE LOGIC MLB-1 EXT SDV VER.1.09)

VER.2.00	11/16/2006	APPLIED	MLB1_SIT_034-044,46)
VER.2.00	11/16/2006	APPLIED	DAV3_SIT_071-074,079,082,088,089,091,096)
VER.2.01	11/20/2006	APPLIED	MLB1_SIT_45,47)
VER.2.01	11/20/2006	APPLIED	DAV3_SIT_104,110-112)
VER.2.02	11/22/2006	APPLIED	MLB1_SIT_48-51)
VER.2.02	11/22/2006	APPLIED	DAV3_SIT_115,116,119-121)
VER.2.03	12/05/2006	APPLIED	DAV3_SIT_058,069,083-85,90,100)
VER.2.03	12/12/2006	APPLIED	MLB1_SIT_053,055-058,78,80)
VER.2.04	12/13/2006	APPLIED	MLB1_SIT_062,066,067,073,074,076,077)
VER.2.04	12/13/2006	APPLIED	DAV3_SIT_102,103,106,107,122,123,126)
VER.2.04	12/13/2006	APPLIED	DAV3_SIT_127,131,132,141,143,135)
VER.2.04	12/13/2006	APPLIED	DAV3_NV_071,080)
VER.2.05	12/25/2006	APPLIED	MLB1_SIT_EC034,035,036,037,039,040,045,052,054
VER.2.05	12/15/2006	APPLIED	EC055,057,063,061,060,059,064,065,066
VER.2.05	12/15/2006	APPLIED	DAV3_NV_EC083,085,086
VER.2.05	12/15/2006	APPLIED	DAV3_SIT_EC145,148,153,159
VER.2.05	12/15/2006	APPLIED	MBL1_SIT_EC069,070,071,072,074,075,082,083
VER.2.06	12/18/2006	APPLIED	DAV3_SIT_EC086,105,108,133
VER.2.07	12/20/2006	APPLIED	DAV3_NV_EC087,157,160,162,168
VER.2.07	12/20/2006	APPLIED	MLB1_SIT_EC091,095,102,103
VER.2.08	12/21/2006	APPLIED	DAV3_SIT_EC170
VER.2.08	12/21/2006	APPLIED	MLB1_SIT_EC113,114,115
VER.2.08	12/21/2006	APPLIED	DAV3_SIT_EC141
VER.2.09	12/22/2006	APPLIED	DAV3_SIT_EC172
VER.2.09	12/22/2006	APPLIED	MLB1_SIT_EC116
VER.2.10	12/25/2006	APPLIED	DAV3_SIT_EC173
VER.2.10	12/25/2006	APPLIED	MLB1_SIT_EC121
VER.2.11	12/28/2006	APPLIED	MDAV3_SIT_EC177 MLB1_SIT_EC132,133
VER.2.12	01/12/2007	APPLIED	EC OF GBE POWER FOR ITEG SVT
VER.2.12	01/12/2007	APPLIED	MALIBU-1_PN_EC1226
VER.2.12	01/12/2007	APPLIED	H2W_P52
VER.2.12	01/12/2007	APPLYED	EC TRANSACTION 0111

SIT (BASE LOGIC MLB-1 EXT DV6 VER.2.12)

VER.2.13	01/15/2007	APPLYED	ACPRESENT
VER.2.13	01/15/2007	APPLYED	BD3551_P52_070112
VER.2.14	01/16/2007	APPLYED	_42W7622SIT0115_P25_20070116
VER.2.14	01/16/2007	APPLYED	GFXCORE CAP 20070116.GIF
VER.2.16	01/17/2007	APPLYED	MLB1_SIT_EC151 20070117
VER.2.16	01/17/2007	APPLYED	DAV3_SIT_EC182 20070117
VER.2.16	01/17/2007	APPLYED	DAV3_SIT_EC180 20070117
VER.2.17	01/17/2007	APPLYED	DAV3_SVT_EC009 20070117
VER.2.18	01/18/2007	APPLYED	MLB1_SIT_EC153 20070118
VER.2.20	01/19/2007	APPLYED	MLB1_SIT_EC155,156 20070119

SVT (BASE LOGIC MLB-1 EXT SIT VER.2.20)

VER.2.21	01/27/2007	APPLYED	DAV3_SIT_EC184 20070127
VER.2.21	01/27/2007	APPLYED	DAV3_NV_EC098 20070127
VER.2.21	01/27/2007	APPLYED	DAV3_NV_EC099 20070127
VER.2.21	01/27/2007	APPLYED	DAV3_NV_EC100 20070127
VER.2.21	01/27/2007	APPLYED	DAV3_SVT_EC025 20070127
VER.2.21	01/27/2007	APPLYED	DAV3_SVT_EC027 20070127
VER.2.21	01/27/2007	APPLYED	DAV3_SVT_EC028 20070127
VER.2.21	01/27/2007	APPLYED	DAV3_SVT_EC029 20070127
VER.2.21	01/27/2007	APPLYED	MBL1_SVT_EC006 20070127
VER.2.21	01/27/2007	APPLYED	MBL1_SVT_EC009 20070127
VER.2.22	01/29/2007	APPLYED	DAV3_SVT_EC030 20070129
VER.2.25	01/30/2007	APPLYED	MLB1_SVT_EC013 20070130
VER.2.25	01/30/2007	APPLYED	MLB1_SVT_EC014 20070130
VER.2.25	01/30/2007	APPLYED	MLB1_SVT_EC004,014 20070130
VER.2.25	01/30/2007	APPLYED	DAV3_SVT_EC014,023,030 20070130
VER.2.25	01/30/2007	APPLYED	DAV3_NV_EC098 20070130
VER.2.26	01/30/2007	APPLYED	DAV3_SVT_EC035 20070130
VER.2.27	01/31/2007	APPLYED	MLB1_SVT_EC018
VER.2.27	01/31/2007	APPLYED	MLB1_SVT_EC021

DESIGNER	K.Y	06/01/06	
CHECKED	Y.I	06/01/06	
APPROVED	T.S	06/01/06	
CLASS	T.S	06/01/06	

PART NO. 42W7622

TITLE MLB-1 SVT HISTORY

THIS DOCUMENT IS THE PROPERTY OF LENOVO.ITS USE IS AUTHORIZED ONLY FOR RESPONDING TO A REQUEST FOR QUOTATION OR FOR THE PERFORMANCE OF WORK FOR LENOVO.ALL QUESTIONS MUST BE REFERRED TO THE LENOVO PURCHASING DEPARTMENT.

LENOVO CONFIDENTIAL

	DATE	EC NO.	PART NO.
	20061220	L11403	42W7622
			DEVELOPMENT NO. / Q/M
			3 / 97

U58
MEROM(1/3)

-D<63..0> (7.8M<>)

0	E22	D[0]#	A[3]# J4 3
1	F24	D[1]#	A[4]# L5 4
2	E26	D[2]#	A[5]# L4 5
3	G22	D[3]#	A[6]# K5 6
4	F23	D[4]#	A[7]# M3 7
5	G25	D[5]#	A[8]# N2 8
6	E25	D[6]#	A[9]# J1 9
7	E23	D[7]#	A[10]# N3 10
8	K24	D[8]#	A[11]# P5 11
9	G24	D[9]#	A[12]# P2 12
10	J24	D[10]#	A[13]# L2 13
11	J23	D[11]#	A[14]# P4 14
12	H22	D[12]#	A[15]# P1 15
13	F26	D[13]#	A[16]# R1 16
14	K22	D[14]#	A[17]# Y2 17
15	H23	D[15]#	A[18]# U5 18
16	N22	D[16]#	A[19]# R3 19
17	K25	D[17]#	A[20]# W6 20
18	P26	D[18]#	A[21]# U4 21
19	R23	D[19]#	A[22]# Y5 22
20	L23	D[20]#	A[23]# U1 23
21	M24	D[21]#	A[24]# R4 24
22	L22	D[22]#	A[25]# T5 25
23	M23	D[23]#	A[26]# T3 26
24	P25	D[24]#	A[27]# W2 27
25	P23	D[25]#	A[28]# W5 28
26	P22	D[26]#	A[29]# Y4 29
27	T24	D[27]#	A[30]# U2 30
28	R24	D[28]#	A[31]# V4 31
29	L25	D[29]#	A[32]# W3 32
30	T25	D[30]#	A[33]# AA4 33
31	N25	D[31]#	A[34]# AB2 34
32	Y22	D[32]#	A[35]# AA3 35
33	AB24	D[33]#	
34	V24	D[34]#	ADSTB[0]# M1 → -ADSTB0 (7.5D<>)
35	V26	D[35]#	ADSTB[1]# V1 → -ADSTB1 (7.5D<>)
36	V23	D[36]#	
37	T22	D[37]#	DSTBN[0]# J26
38	U25	D[38]#	DSTBN[1]# L26
39	U23	D[39]#	DSTBN[2]# Y26
40	Y25	D[40]#	DSTBN[3]# AE25 → -DSTBN<3..0> (7.3L<>)
41	W22	D[41]#	
42	Y23	D[42]#	DSTBP[0]# H26
43	W24	D[43]#	DSTBP[1]# M26
44	W25	D[44]#	DSTBP[2]# AA26
45	AA23	D[45]#	DSTBP[3]# AF24 → -DSTBP<3..0> (7.2L<>)
46	AA24	D[46]#	
47	AB25	D[47]#	DINV[0]# H25
48	AE24	D[48]#	DINV[1]# N24
49	AD24	D[49]#	DINV[2]# U22
50	AA21	D[50]#	DINV[3]# AC20 → -DINV<3..0> (7.1L<>)
51	AB22	D[51]#	
52	AB21	D[52]#	ADS# H1 → -ADS (7.5D<>)
53	AC26	D[53]#	REQ[0]# K3
54	AD20	D[54]#	REQ[1]# H2
55	AE22	D[55]#	REQ[2]# K2
56	AF23	D[56]#	REQ[3]# J3
57	AC25	D[57]#	REQ[4]# L1 → -HREQ<4..0> (7.5D<>)
58	AE21	D[58]#	
59	AD21	D[59]#	BR0# F1 → -BR0 (7.4D>)
60	AC22	D[60]#	BPRI# G5 → -BPRI (7.3D>)
61	AD23	D[61]#	BNR# E2 → -BNR (7.4D<>)
62	AF22	D[62]#	
63	AC23	D[63]#	LOCK# H4 → -HLOCK (7.4D<)
			HIT# G6 → -HIT (7.4D<>)
			HITM# E4 → -HITM (7.4D<>)
			DBSY# E1 → -DBSY (7.4D<>)
			DRDY# F21 → -DRDY (7.4D<>)
			IERR# D20
			FERR# A5 → -FERR (31.1L<)
			DPRSTP# E5 → -DPRSTP (31.1L> 10.1B<)
			DPSLP# B5 → -DPSLP (82.9B<)
			DPWR# D24 → -DPWR (7.2D>)
			SLP# D7 → -SLP (7.1L>)
			PSI# AE6 → -PSI (82.9B<)
			THERMDA A24 → THERMDA (69.8P<)
			THERMDC B25 → THERMDC (69.8P<)
			THERMTRIP# C7
			PROCHOT# D21 → -PROCHOT (82.5J>)
			COMP[0] R26
			COMP[1] U26
			COMP[2] AA1
			COMP[3] Y1
A22	BCLK[0]		
A21	BCLK[1]		
B3	INIT#		
A6	A20M#		
C4	IGNNE#		
A3	SMI#		
D5	STPCLK#		
C6	LINT0 /INTR		
B4	LINT1 /NMI		
H5	DEFER#		
G2	TRDY#		
F3	RS[0]#		
F4	RS[1]#		
G3	RS[2]#		
C1	RESET#		
D6	PWRGOOD		

19.6K> CPUCLK_CPU_200M
19.6K> -CPUCLK_CPU_200M

31.1L> -INIT
31.2L> -A20M
31.2L> -IGNNE
31.1L> -SMI
31.1L> -STPCLK
31.1L> INTR
31.1L> NMI

7.3D> -DEFER
7.3D<> -HTRDY

7.3D> -RS<2..0>

6.6B< 7.2D> -CPURST

31.1L> CPUPWRGD

VCC1R05B

R654 5K 5% 1/16W 1005
R656 68 5% 1/16W 1005

TEST PAD
BOTTOM SIDE
DO NOT MOVE AFTER FIX
TP19
1.0

TESTPAD

-THERMTRIP (10.3M> 32.3M<)

PLACE NEAR CPU

C339 100PF 50V 5% 1005

R633 54.9 1% 1/16W 1005
R637 27.4 1% 1/16W 1005
R642 54.9 1% 1/16W 1005
R644 27.4 1% 1/16W 1005

GND

<0.5

COMP0/2: Z0=27.4 OHM TRACE <0.5"
COMP1/3: Z0=55 OHM TRACE <0.5"

DESIGNER	K.Y	06/01/06
CHECKED	Y.I	06/01/06
APPROVED	T.S	06/01/06
CLASS	T.S	06/01/06

THIS DOCUMENT IS THE PROPERTY OF LENOVO.ITS USE IS AUTHORIZED ONLY FOR RESPONDING TO A REQUEST FOR QUOTATION OR FOR THE PERFORMANCE OF WORK FOR LENOVO.ALL QUESTIONS MUST BE REFERRED TO THE LENOVO PURCHASING DEPARTMENT.

PART NO. 42W7622

TITLE MLB-1 SVT

CPU(1/3)

LENOVO CONFIDENTIAL

42W7622

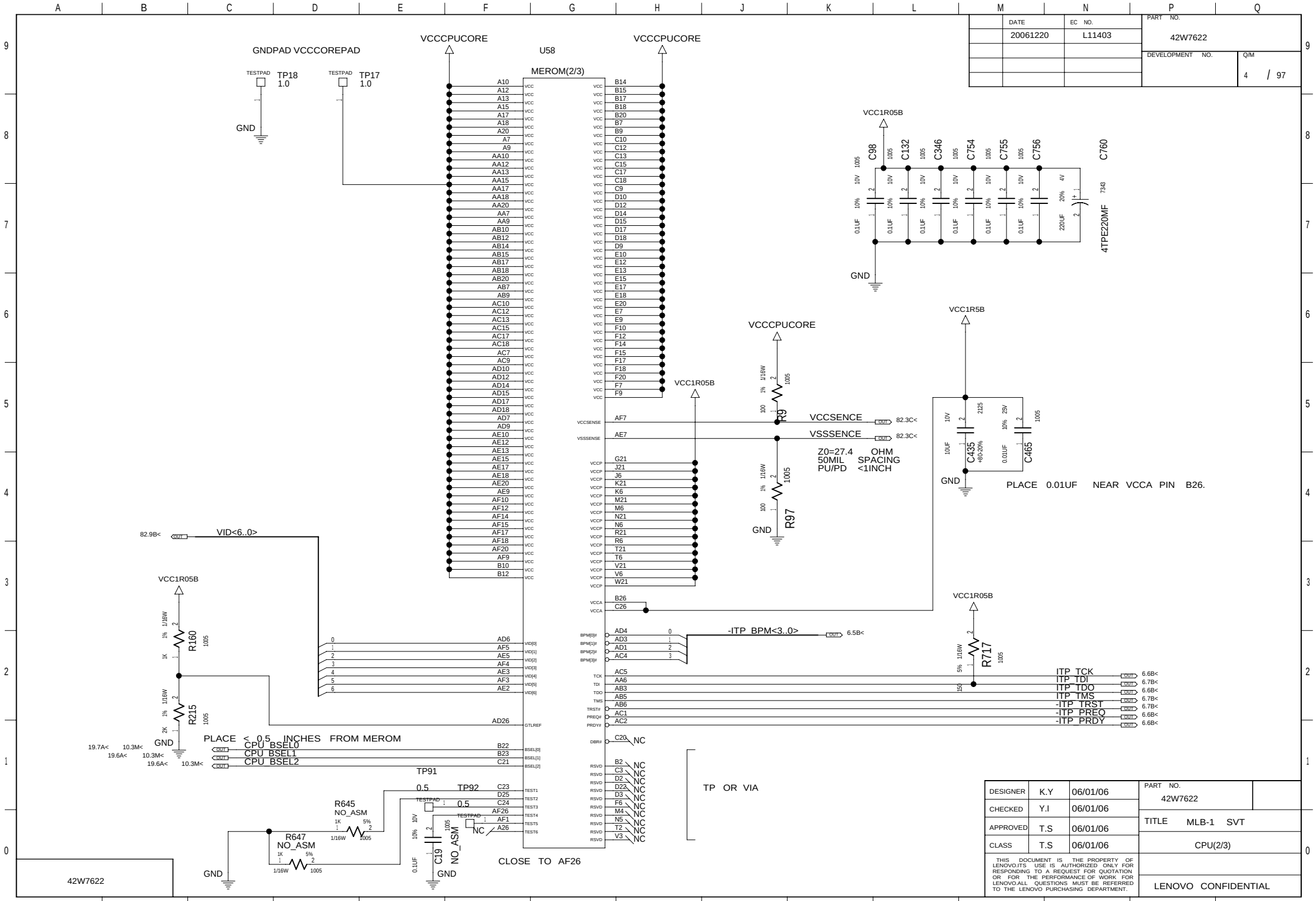
DATE 20061220
EC NO. L11403
PART NO. 42W7622
DEVELOPMENT NO.
Q/M 4 / 97
GNDPAD VCCCOREPAD
TP18 1.0
TP17 1.0
VCCCPUCORE
U58
MEROM(2/3)
VCC1R05B
C98 C132 C346 C754 C755 C756 C760
4TPE220MF
VCCSENCE
VSSSENCE
Z0=27.4 OHM
50MIL SPACING
PU/PD <1INCH
R9
R97
C435 C465
PLACE 0.01UF NEAR VCCA PIN B26.
VID<6..0>
R160
R215
-ITP_BPM<3..0>
R717
ITP_TCK
ITP_TDI
ITP_TDO
ITP_TMS
-ITP_TRST
-ITP_PREQ
-ITP_PRDY
PLACE < 0.5 INCHES FROM MEROM
CPU_BSEL0
CPU_BSEL1
CPU_BSEL2
TP91
TP92
R645 NO_ASM
R647 NO_ASM
C19 NO_ASM
TP OR VIA
CLOSE TO AF26
42W7622
DESIGNER K.Y 06/01/06
CHECKED Y.I 06/01/06
APPROVED T.S 06/01/06
CLASS T.S 06/01/06
PART NO. 42W7622
TITLE MLB-1 SVT
CPU(2/3)
THIS DOCUMENT IS THE PROPERTY OF LENOVO.ITS USE IS AUTHORIZED ONLY FOR RESPONDING TO A REQUEST FOR QUOTATION OR FOR THE PERFORMANCE OF WORK FOR LENOVO.ALL QUESTIONS MUST BE REFERRED TO THE LENOVO PURCHASING DEPARTMENT.
LENOVO CONFIDENTIAL

	DATE	EC NO.	PART NO.
	20061220	L11403	42W7622
			DEVELOPMENT NO. / Q/M
			5 / 97

U58

MEROM(3/3)

A11	VSS	VSS	D11
A14	VSS	VSS	D13
A16	VSS	VSS	D16
A19	VSS	VSS	D19
A2	VSS	VSS	D23
A23	VSS	VSS	D26
A25	VSS	VSS	D4
A4	VSS	VSS	D8
A8	VSS	VSS	E11
AA11	VSS	VSS	E14
AA14	VSS	VSS	E16
AA16	VSS	VSS	E19
AA19	VSS	VSS	E21
AA2	VSS	VSS	E24
AA22	VSS	VSS	E3
AA25	VSS	VSS	E6
AA5	VSS	VSS	E8
AA8	VSS	VSS	F11
AB1	VSS	VSS	F13
AB11	VSS	VSS	F16
AB13	VSS	VSS	F19
AB16	VSS	VSS	F2
AB19	VSS	VSS	F22
AB23	VSS	VSS	F25
AB26	VSS	VSS	F5
AB4	VSS	VSS	F8
AB8	VSS	VSS	G1
AC11	VSS	VSS	G23
AC14	VSS	VSS	G26
AC16	VSS	VSS	G4
AC19	VSS	VSS	H21
AC21	VSS	VSS	H24
AC24	VSS	VSS	H3
AC3	VSS	VSS	H6
AC6	VSS	VSS	J2
AC8	VSS	VSS	J22
AD11	VSS	VSS	J25
AD13	VSS	VSS	J5
AD16	VSS	VSS	K1
AD19	VSS	VSS	K23
AD2	VSS	VSS	K26
AD22	VSS	VSS	K4
AD25	VSS	VSS	L21
AD5	VSS	VSS	L24
AD8	VSS	VSS	L3
AE1	VSS	VSS	L6
AE11	VSS	VSS	M2
AE14	VSS	VSS	M22
AE16	VSS	VSS	M25
AE19	VSS	VSS	M5
AE23	VSS	VSS	N1
AE26	VSS	VSS	N23
AE4	VSS	VSS	N26
AE8	VSS	VSS	N4
AF11	VSS	VSS	P21
AF13	VSS	VSS	P24
AF16	VSS	VSS	P3
AF19	VSS	VSS	P6
AF2	VSS	VSS	R2
AF21	VSS	VSS	R22
AF25	VSS	VSS	R25
AF6	VSS	VSS	R5
AF8	VSS	VSS	T1
B11	VSS	VSS	T23
B13	VSS	VSS	T26
B16	VSS	VSS	T4
B19	VSS	VSS	U21
B21	VSS	VSS	U24
B24	VSS	VSS	U3
B6	VSS	VSS	U6
B8	VSS	VSS	V2
C11	VSS	VSS	V22
C14	VSS	VSS	V25
C16	VSS	VSS	V5
C19	VSS	VSS	W1
C2	VSS	VSS	W23
C22	VSS	VSS	W26
C25	VSS	VSS	W4
C5	VSS	VSS	Y21
C8	VSS	VSS	Y24
D1	VSS	VSS	Y3
	VSS	VSS	Y6

GND GND

DO NOT MOVE

AFTER FIX

TP16

TESTPAD 1.0 (BOTTOM SIDE)

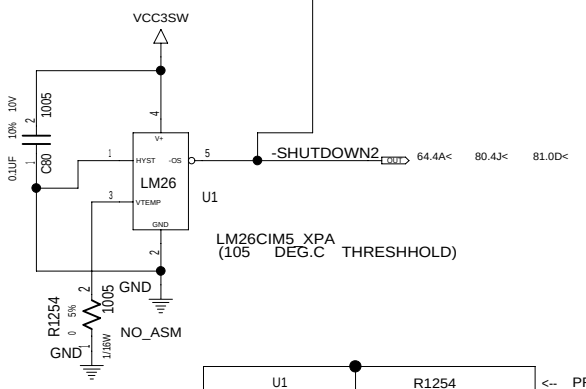

U1	R1254	<-- PRIMARY
NS LM26 MAXIM MAX6519	NO_ASM	
MAXIM MAX6501 ADI ADT6501	ASM	

DESIGNER	K.Y	06/01/06	PART NO. 42W7622
CHECKED	Y.I	06/01/06	
APPROVED	T.S	06/01/06	TITLE MLB-1 SVT
CLASS	T.S	06/01/06	CPU(3/3)

THIS DOCUMENT IS THE PROPERTY OF LENOVO.ITS USE IS AUTHORIZED ONLY FOR RESPONDING TO A REQUEST FOR QUOTATION OR FOR THE PERFORMANCE OF WORK FOR LENOVO.ALL QUESTIONS MUST BE REFERRED TO THE LENOVO PURCHASING DEPARTMENT.

LENOVO CONFIDENTIAL

	DATE	EC NO.	PART NO.
	20061220	L11403	42W7622
			DEVELOPMENT NO. / Q/M: 6 / 97

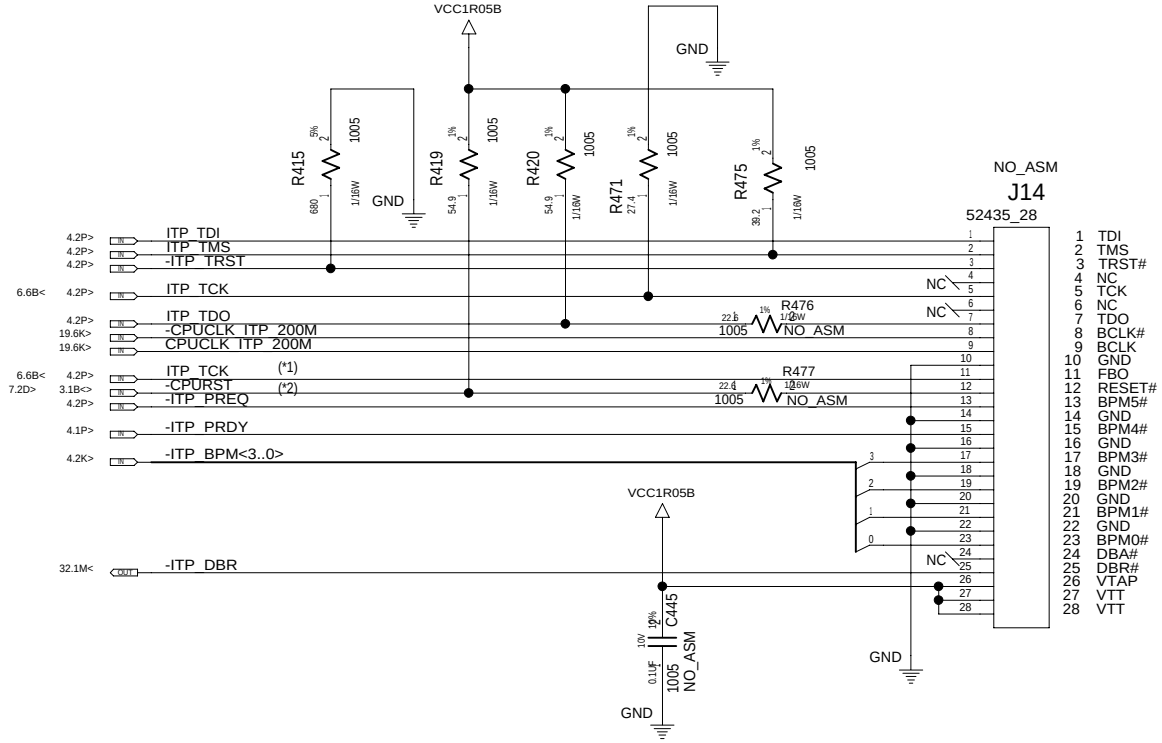

REF DES	FOR ITP700FLEX	FOR ITP--XDP
J14	NO_ASM ---> ASM	NO_ASM ---> ASM
C445	ASM ---> ASM	ASM ---> ASM
R717	ASM(NO CHANGE)	ASM ---> 51 5% ASM
R476	ASM ---> ASM	ASM ---> ASM
R477	ASM ---> ASM	ASM ---> 1K 5% ASM
R415	ASM(NO CHANGE)	ASM(NO CHANGE)
R419	ASM(NO CHANGE)	ASM ---> NO_ASM
R420	ASM(NO CHANGE)	ASM(NO CHANGE)
R471	ASM(NO CHANGE)	ASM ---> 51 5% ASM
R475	ASM(NO CHANGE)	ASM ---> 51 5% ASM

NOTE: C445,R476 AND R477 "ASM" BEFORE SIT, "NO_ASM" FROM SIT.

(*1) TCK SIGNAL IS BRANCHED AT YONAH PIN

(*2) -CPURST SIGNAL IS BRANCHED AT CRESTLINE PIN

DESIGNER	K.Y	06/01/06
CHECKED	Y.I	06/01/06
APPROVED	T.S	06/01/06
CLASS	T.S	06/01/06

THIS DOCUMENT IS THE PROPERTY OF LENOVO.ITS USE IS AUTHORIZED ONLY FOR RESPONDING TO A REQUEST FOR QUOTATION OR FOR THE PERFORMANCE OF WORK FOR LENOVO.ALL QUESTIONS MUST BE REFERRED TO THE LENOVO PURCHASING DEPARTMENT.

PART NO. 42W7622

TITLE MLB-1 SVT

ITP CONN/LARGE PTH HOLE

EMI FINGER

LENOVO CONFIDENTIAL

DATE	EC NO.	PART NO.
20061220	L11403	42W7622
		DEVELOPMENT NO.
		Q/M 7 / 97

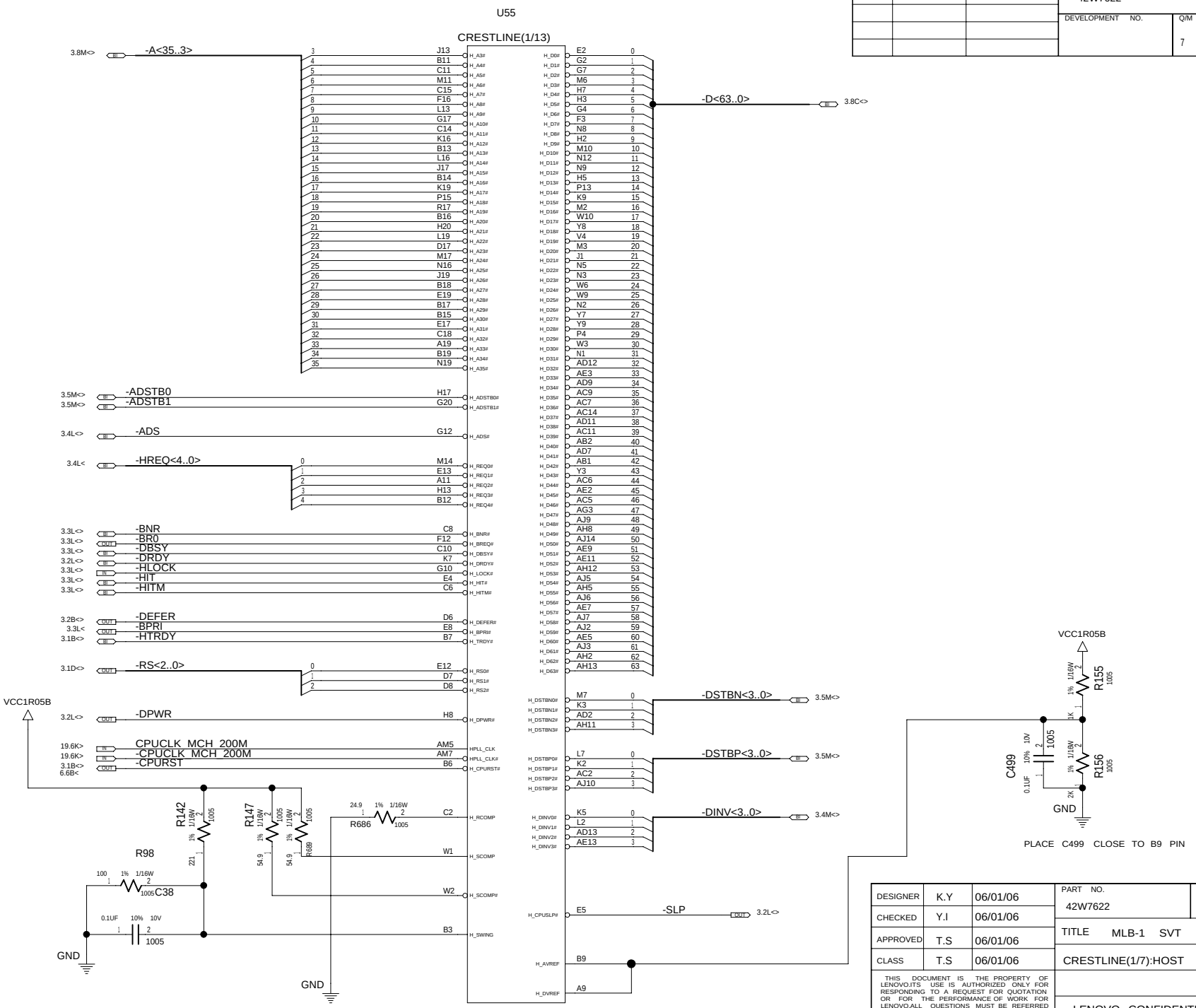

DESIGNER	K.Y	06/01/06
CHECKED	Y.I	06/01/06
APPROVED	T.S	06/01/06
CLASS	T.S	06/01/06

PART NO. 42W7622

TITLE MLB-1 SVT

CRESTLINE(1/7):HOST I/F

THIS DOCUMENT IS THE PROPERTY OF LENOVO.ITS USE IS AUTHORIZED ONLY FOR RESPONDING TO A REQUEST FOR QUOTATION OR FOR THE PERFORMANCE OF WORK FOR LENOVO.ALL QUESTIONS MUST BE REFERRED TO THE LENOVO PURCHASING DEPARTMENT.

LENOVO CONFIDENTIAL

42W7622

U55

CRESTLINE(2/13)

	DATE	EC NO.	PART NO.
	20061220	L11403	42W7622
			DEVELOPMENT NO.
			Q/M 8 / 97

15.9B<> 15.8L<> M_A_DQ<63..0>

0	AR43	SA_DQ0	
1	AW44	SA_DQ1	
2	BA45	SA_DQ2	
3	AY46	SA_DQ3	
4	AR41	SA_DQ4	
5	AR45	SA_DQ5	
6	AT42	SA_DQ6	
7	AW47	SA_DQ7	
8	BB45	SA_DQ8	
9	BF48	SA_DQ9	
10	BG47	SA_DQ10	
11	BJ45	SA_DQ11	
12	BB47	SA_DQ12	
13	BG50	SA_DQ13	
14	BH49	SA_DQ14	
15	BE45	SA_DQ15	
16	AW43	SA_DQ16	
17	BE44	SA_DQ17	
18	BG42	SA_DQ18	
19	BE40	SA_DQ19	
20	BF44	SA_DQ20	
21	BH45	SA_DQ21	
22	BG40	SA_DQ22	
23	BF40	SA_DQ23	
24	AR40	SA_DQ24	
25	AW40	SA_DQ25	
26	AT39	SA_DQ26	
27	AW36	SA_DQ27	
28	AW41	SA_DQ28	
29	AY41	SA_DQ29	
30	AV38	SA_DQ30	
31	AT38	SA_DQ31	
32	AV13	SA_DQ32	
33	AT13	SA_DQ33	
34	AW11	SA_DQ34	
35	AV11	SA_DQ35	
36	AU15	SA_DQ36	
37	AT11	SA_DQ37	
38	BA13	SA_DQ38	
39	BA11	SA_DQ39	
40	BE10	SA_DQ40	
41	BD10	SA_DQ41	
42	BD8	SA_DQ42	
43	AY9	SA_DQ43	
44	BG10	SA_DQ44	
45	AW9	SA_DQ45	
46	BD7	SA_DQ46	
47	BB9	SA_DQ47	
48	BB5	SA_DQ48	
49	AY7	SA_DQ49	
50	AT5	SA_DQ50	
51	AT7	SA_DQ51	
52	AY6	SA_DQ52	
53	BB7	SA_DQ53	
54	AR5	SA_DQ54	
55	AR8	SA_DQ55	
56	AR9	SA_DQ56	
57	AN3	SA_DQ57	
58	AM8	SA_DQ58	
59	AN10	SA_DQ59	
60	AT9	SA_DQ60	
61	AN9	SA_DQ61	
62	AM9	SA_DQ62	
63	AN11	SA_DQ63	

15.7M< 15.9B<> M_A_DQS<7..0>

15.6M< 15.8B<> -M_A_DQS<7..0>

0	AT46	SA_DQS0	
0	AT47	SA_DQS0#	
1	BE48	SA_DQS1	
1	BD47	SA_DQS1#	
2	BB43	SA_DQS2	
2	BC41	SA_DQS2#	
3	BC37	SA_DQS3	
3	BA37	SA_DQS3#	
4	BB16	SA_DQS4	
4	BA16	SA_DQS4#	
5	BH6	SA_DQS5	
5	BH7	SA_DQS5#	
6	BB2	SA_DQS6	
6	BC1	SA_DQS6#	
7	AP3	SA_DQS7	
7	AP2	SA_DQS7#	

SM_CK0	AV29		
SM_CK0#	AW30		DDRCLK0_333M OUT 15.8L<
			-DDRCLK0_333M OUT 15.8L<
SM_CK1	BB23		
SM_CK1#	BA23		DDRCLK1_333M OUT 15.1M<
			-DDRCLK1_333M OUT 15.1M<

M_A_A<14..0> OUT 13.9E> 15.5A< 15.5M< 17.4E<

SA_MA0	BJ19	0
SA_MA1	BD20	1
SA_MA2	BK27	2
SA_MA3	BH28	3
SA_MA4	BL24	4
SA_MA5	BK28	5
SA_MA6	BJ27	6
SA_MA7	BJ25	7
SA_MA8	BL28	8
SA_MA9	BA28	9
SA_MA10	BC19	10
SA_MA11	BE28	11
SA_MA12	BG30	12
SA_MA13	BJ16	13

M_A_BS<2..0> OUT 15.4M< 15.5A< 17.7E<

SA_BS0	BB19	0
SA_BS1	BK19	1
SA_BS2	BF29	2

M_CKE<1..0> OUT 15.5A< 15.5M< 17.8E<

SM_CKE0	BE29	0
SM_CKE1	AY32	1

-M_CS<1..0> OUT 15.4A< 15.4M< 17.5E<

SM_CS0#	BG20	0
SM_CS1#	BK16	1

SA_RAS#	BE18	-M_A_RAS OUT 15.4M< 17.6E<
SA_CAS#	BL17	-M_A_CAS OUT 15.4A< 17.6E<
SA_WE#	BA19	-M_A_WE OUT 15.4A< 17.6E<

M_A_DM<7..0> OUT 15.6A< 15.7L<

SA_DM0	AT45	0
SA_DM1	BD44	1
SA_DM2	BD42	2
SA_DM3	AW38	3
SA_DM4	AW13	4
SA_DM5	BG8	5
SA_DM6	AY5	6
SA_DM7	AN6	7

M_ODT<1..0> OUT 15.3A< 15.4M< 17.7E<

SM_ODT0	BH18	0
SM_ODT1	BJ15	1

SA_RCVEN# AY20 — TESTPAD 0.5 — TP2 — TP OR VIA

SM_RCOMP BL15 — R166 20 1% 1/16W 1005 — VCC1R8A

SM_RCOMP# BK14 — R167 20 1% 1/16W 1005 — VCC1R8A

SM_RCOMP_VOH BK31 — R158 1K 1% 1/10W 1608 — VCC1R8A

SM_RCOMP_VOL BL31 — GND

SM_VREF AW4 — DDR2_VREF

SM_VREF AR49 — DDR2_VREF

DDR2_VREF: C46 0.1UF 10% 10V 1005 — GND; C51 0.1UF 10% 10V 1005 — GND

DDR2_VREF: C834 2.2UF 10% 6.3V 1608 — C848 0.01UF 10% 25V 1005 — GND; R162 3.01K 1% 1/16W 1005

DDR2_VREF: C852 2.2UF 10% 6.3V 1608 — C855 0.01UF 10% 25V 1005 — GND GND; R958 1K 1% 1/10W 1608

DESIGNER	K.Y	06/01/06
CHECKED	Y.I	06/01/06
APPROVED	T.S	06/01/06
CLASS	T.S	06/01/06

THIS DOCUMENT IS THE PROPERTY OF LENOVO.ITS USE IS AUTHORIZED ONLY FOR RESPONDING TO A REQUEST FOR QUOTATION OR FOR THE PERFORMANCE OF WORK FOR LENOVO.ALL QUESTIONS MUST BE REFERRED TO THE LENOVO PURCHASING DEPARTMENT.

PART NO. 42W7622

TITLE MLB-1 SVT

CRESTLINE(2/7):DDR2-A

LENOVO CONFIDENTIAL

42W7622

U55

CRESTLINE(3/13)

	DATE	EC NO.	PART NO.
	20061220	L11403	42W7622
			DEVELOPMENT NO.
			Q/M 9 / 97

16.9C<> 16.8M<> M_B_DQ<63..0>

0	AP49	SB_DQ0	
1	AR51	SB_DQ1	
2	AW50	SB_DQ2	
3	AW51	SB_DQ3	
4	AN51	SB_DQ4	
5	AN50	SB_DQ5	
6	AV50	SB_DQ6	
7	AV49	SB_DQ7	
8	BA50	SB_DQ8	
9	BB50	SB_DQ9	
10	BA49	SB_DQ10	
11	BE50	SB_DQ11	
12	BA51	SB_DQ12	
13	AY49	SB_DQ13	
14	BF50	SB_DQ14	
15	BF49	SB_DQ15	
16	BJ50	SB_DQ16	
17	BJ44	SB_DQ17	
18	BJ43	SB_DQ18	
19	BL43	SB_DQ19	
20	BK47	SB_DQ20	
21	BK49	SB_DQ21	
22	BK43	SB_DQ22	
23	BK42	SB_DQ23	
24	BJ41	SB_DQ24	
25	BL41	SB_DQ25	
26	BJ37	SB_DQ26	
27	BJ36	SB_DQ27	
28	BK41	SB_DQ28	
29	BJ40	SB_DQ29	
30	BL35	SB_DQ30	
31	BK37	SB_DQ31	
32	BK13	SB_DQ32	
33	BE11	SB_DQ33	
34	BK11	SB_DQ34	
35	BC11	SB_DQ35	
36	BC13	SB_DQ36	
37	BE12	SB_DQ37	
38	BC12	SB_DQ38	
39	BG12	SB_DQ39	
40	BJ10	SB_DQ40	
41	BL9	SB_DQ41	
42	BK5	SB_DQ42	
43	BL5	SB_DQ43	
44	BK9	SB_DQ44	
45	BK10	SB_DQ45	
46	BJ8	SB_DQ46	
47	BJ6	SB_DQ47	
48	BF4	SB_DQ48	
49	BH5	SB_DQ49	
50	BG1	SB_DQ50	
51	BC2	SB_DQ51	
52	BK3	SB_DQ52	
53	BE4	SB_DQ53	
54	BD3	SB_DQ54	
55	BJ2	SB_DQ55	
56	BA3	SB_DQ56	
57	BB3	SB_DQ57	
58	AR1	SB_DQ58	
59	AT3	SB_DQ59	
60	AY2	SB_DQ60	
61	AY3	SB_DQ61	
62	AU2	SB_DQ62	
63	AT2	SB_DQ63	

16.7M< 16.9C<> M_B_DQS<7..0>

16.6M< 16.8C<> -M_B_DQS<7..0>

0	AT50	SB_DQS0	
	AU50	SB_DQS0#	
1	BD50	SB_DQS1	
	BC50	SB_DQS1#	
2	BK46	SB_DQS2	
	BL45	SB_DQS2#	
3	BK39	SB_DQS3	
	BK38	SB_DQS3#	
4	BJ12	SB_DQS4	
	BK12	SB_DQS4#	
5	BL7	SB_DQS5	
	BK7	SB_DQS5#	
6	BE2	SB_DQS6	
	BF2	SB_DQS6#	
7	AV2	SB_DQS7	
	AV3	SB_DQS7#	

SM_CK3	BA25	
SM_CK3#	AW25	DDRCLK2_333M / -DDRCLK2_333M OUT 16.1M< 16.1M<
SM_CK4	AV23	
SM_CK4#	AW23	DDRCLK3_333M / -DDRCLK3_333M OUT 16.8M< 16.8M<

M_B_A<14..0> OUT 13.8E> 16.5B< 16.5M< 17.2E<

SB_MA0	BC18	0
SB_MA1	BG28	1
SB_MA2	BG25	2
SB_MA3	AW17	3
SB_MA4	BF25	4
SB_MA5	BE25	5
SB_MA6	BA29	6
SB_MA7	BC28	7
SB_MA8	AY28	8
SB_MA9	BD37	9
SB_MA10	BG17	10
SB_MA11	BE37	11
SB_MA12	BA39	12
SB_MA13	BG13	13

M_B_BS<2..0> OUT 16.4M< 16.5B< 17.6E<

SB_BS0	AY17	0
SB_BS1	BG18	1
SB_BS2	BG36	2

M_CKE<3..2> OUT 16.5B< 16.5M< 17.8E<

SM_CKE3	BD39	2
SM_CKE4	BG37	3

-M_CS<3..2> OUT 16.4B< 16.4M< 17.5E<

SM_CS2#	BG16	2
SM_CS3#	BE13	3

SB_RAS#	AV16	-M_B_RAS OUT 16.4M< 17.5E<
SB_CAS#	BE17	-M_B_CAS OUT 16.4B< 17.5E<
SB_WE#	BC17	-M_B_WE OUT 16.4B< 17.5E<

M_B_DM<7..0> OUT 16.6B< 16.7M<

SB_DM0	AR50	0
SB_DM1	BD49	1
SB_DM2	BK45	2
SB_DM3	BL39	3
SB_DM4	BH12	4
SB_DM5	BJ7	5
SB_DM6	BF3	6
SB_DM7	AW2	7

M_ODT<3..2> OUT 16.3B< 16.4M< 17.7E<

SM_ODT2	BJ14	2
SM_ODT3	BE16	3

SB_RCVEN# AY18 — TP5 0.5 TESTPAD

TP OR VIA

VCC1R25AMT

L16 2125 MLZ20121ROP 1UH

L21 1UH 2125 MLZ20121ROP

VCCA_HPLL AL2

VCCA_MPLL AM2

VCCD_HPLL AN2

R85 .51 1% .1/16W 2 1005

C79 0.1UF 10% 10V 2 1005

C109 0.1UF 10% 10V 2 1005

C121 .22UF 20% 6.3V 2 2125

C123 .22UF 20% 6.3V 2 2125

C209 0.1UF 10% 10V 2 1005

GND

DESIGNER	K.Y	06/01/06
CHECKED	Y.I	06/01/06
APPROVED	T.S	06/01/06
CLASS	T.S	06/01/06

THIS DOCUMENT IS THE PROPERTY OF LENOVO.ITS USE IS AUTHORIZED ONLY FOR RESPONDING TO A REQUEST FOR QUOTATION OR FOR THE PERFORMANCE OF WORK FOR LENOVO.ALL QUESTIONS MUST BE REFERRED TO THE LENOVO PURCHASING DEPARTMENT.

PART NO. 42W7622

TITLE MLB-1 SVT

CRESTLINE(3/7):DDR2-B

LENOVO CONFIDENTIAL

42W7622

	DATE	EC NO.	PART NO.
	20061220	L11403	42W7622
			DEVELOPMENT NO. / Q/M: 10 / 97

U55

CRESTLINE(4/13)

VCC1R05B_PCIE

R181 24.9 1% 1/16W 1005

20.5N> PCIE_GFX_RXP<15..0>

20.4N> PCIE_GFX_RXN<15..0>

VCC3B

R168 10K 5% 1/16W 1005

R533 10K 5% 1/16W 1005

PCIE_GFX_TXP<15..0> OUT 20.5B<

PCIE_GFX_TXN<15..0> OUT 20.4B<

LANE REVERSAL APPLIED

POLARITY INVERSION APPLIED TO ALL PAIRS

31.8L> DMI_TXN<3..0>

31.8L> DMI_TXP<3..0>

DMI_RXN<3..0> OUT 31.9L<

DMI_RXP<3..0> OUT 31.9L<

19.1L> PCIE_CLK_MCH

19.1L> -PCIE_CLK_MCH

19.1N< -CLKREQ_MCH

57.2C< 31.7A> 67.5L< 90.3H< -PLTRST_NEAR

R178 100 5% 1/16W 1005

69.5E< 64.6B< 91.3M> 87.1N> 61.1B< 32.1M< 70.0H< 69.6B< BPWRG

R21 0 5% 1/16W 1005

15.7L> -MEM_TS0

16.7M> -MEM_TS1

32.3Q> DPRSLPVR

82.9B< 3.2L< 31.1L> -DPRSTP

-THERMTRIP OUT 3.2Q<> 32.3M<

CPU_BSEL0 4.1C> 19.7A<

CPU_BSEL1 4.1C> 19.6A<

CPU_BSEL2 4.1C> 19.6A<

R1024 1K 5% 1/16W 1005

R1025 1K 5% 1/16W 1005

R1026 1K 5% 1/16W 1005

HOST BUS CLK SELECT TABLE

	BSEL2	BSEL1	BSEL0
533M	0	0	1
667M	0	1	1
800M	0	1	0

CFG[17:3] INTERNAL PULLUP

CFG[20:18] INTERNAL PULLDOWN

TP12 TESTPAD 0.5 TP OR VIA TP6 TESTPAD 0.5

TP7 TESTPAD 0.5

TP9 TESTPAD 0.5

TP21 TESTPAD 0.5

TP23 TESTPAD 0.5

TP24 TESTPAD 0.5

TP25 TESTPAD 0.5

TP11 TESTPAD 0.5

TP26 TESTPAD 0.5

TP27 TESTPAD 0.5

TP13 TESTPAD 0.5

TP14 TESTPAD 0.5

TP OR VIA

R183 2.2K 5% 1/16W 1005 NO_ASM

R184 2.2K 5% 1/16W 1005 NO_ASM

R383 2.2K 5% 1/16W 1005

R179 2.2K 5% 1/16W 1005

R29 2.2K 5% 1/16W 1005 NO_ASM

GND

DMI	R183
	X2 : ASM
	X4 : NO-ASM
LOW POWER PCIE	R184
NORMAL	: ASM
LOW POWER MODE	: NO_ASM
	R383
LANE REVERSEL	: ASM
NORMAL	: NO_ASM

VCC1R25AMT

R144 90.4N> 32.1Q< 1K 1% 1/16W 1005

392 1% 1/16W 1005 R571

C640 1005 0.1UF 10% 10V

GND GND

31.1E<> 31.1E<> 31.1E>

CL_CLK_MCH

CL_DATA_MCH

CLPWRG

-CL_RST_MCH

DESIGNER	K.Y	06/01/06
CHECKED	Y.I	06/01/06
APPROVED	T.S	06/01/06
CLASS	T.S	06/01/06

THIS DOCUMENT IS THE PROPERTY OF LENOVO.ITS USE IS AUTHORIZED ONLY FOR RESPONDING TO A REQUEST FOR QUOTATION OR FOR THE PERFORMANCE OF WORK FOR LENOVO.ALL QUESTIONS MUST BE REFERRED TO THE LENOVO PURCHASING DEPARTMENT.

PART NO. 42W7622

TITLE MLB-1 SVT

CRESTLINE(4/7) : PEG/DMI

LENOVO CONFIDENTIAL

42W7622

	DATE	EC NO.	PART NO.
	20061220	L11403	42W7622
			DEVELOPMENT NO. / Q/M: 11 / 97

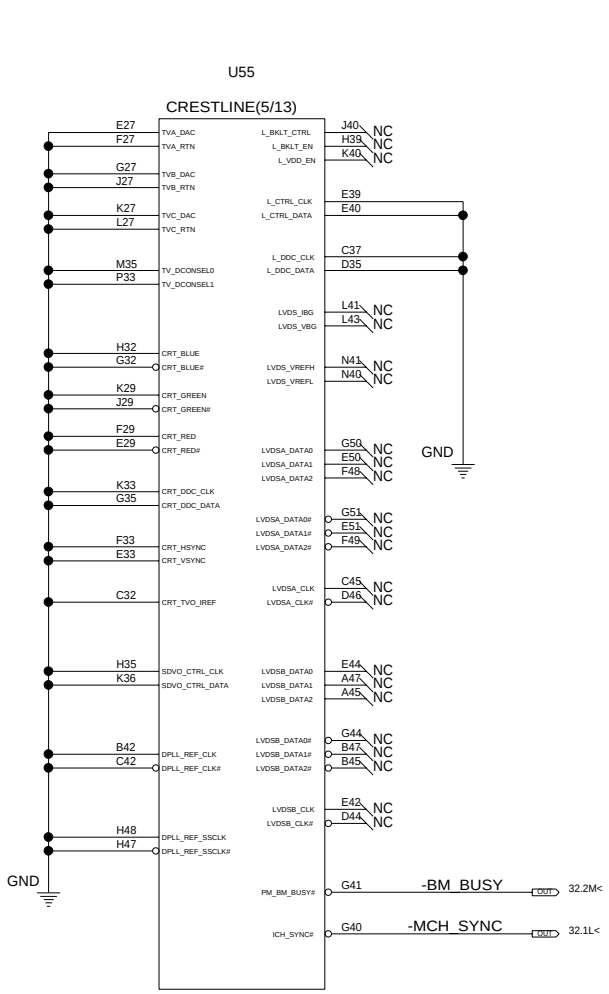

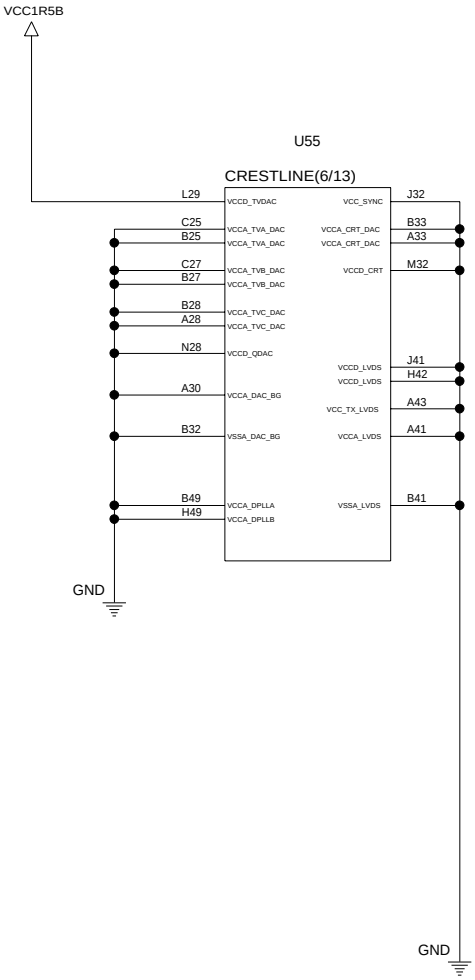

DESIGNER	K.Y	06/01/06	PART NO. 42W7622
CHECKED	Y.I	06/01/06	
APPROVED	T.S	06/01/06	TITLE MLB-1 SVT
CLASS	T.S	06/01/06	CRESTLINE(5/7):GRAPHICS

THIS DOCUMENT IS THE PROPERTY OF LENOVO.ITS USE IS AUTHORIZED ONLY FOR RESPONDING TO A REQUEST FOR QUOTATION OR FOR THE PERFORMANCE OF WORK FOR LENOVO.ALL QUESTIONS MUST BE REFERRED TO THE LENOVO PURCHASING DEPARTMENT.

LENOVO CONFIDENTIAL

	DATE	EC NO.	PART NO. 42W7622
	20061220	L11403	DEVELOPMENT NO. / Q/M 12 / 97

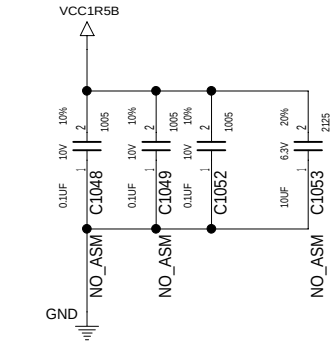

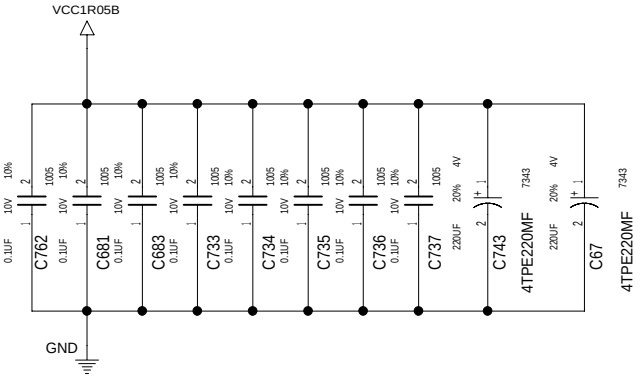

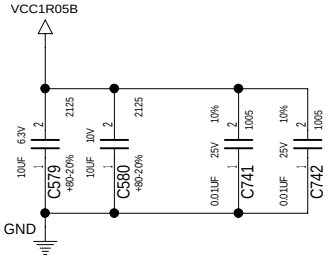

PLACE NEAR VCCGA AND VCCHA.

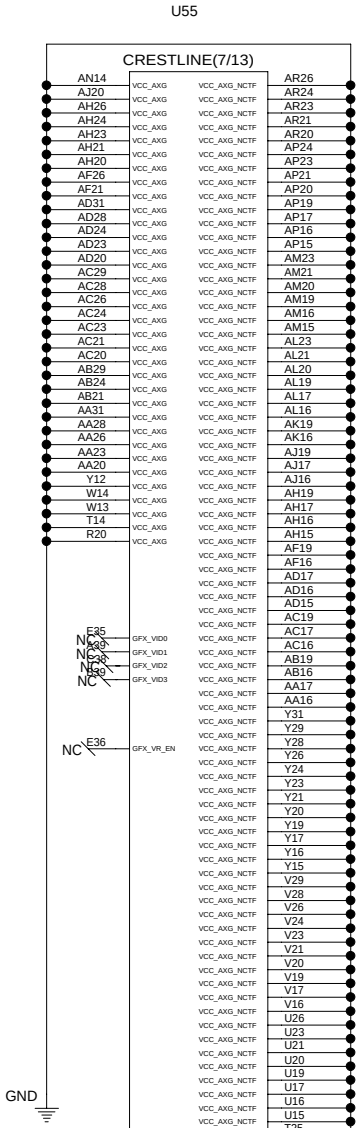

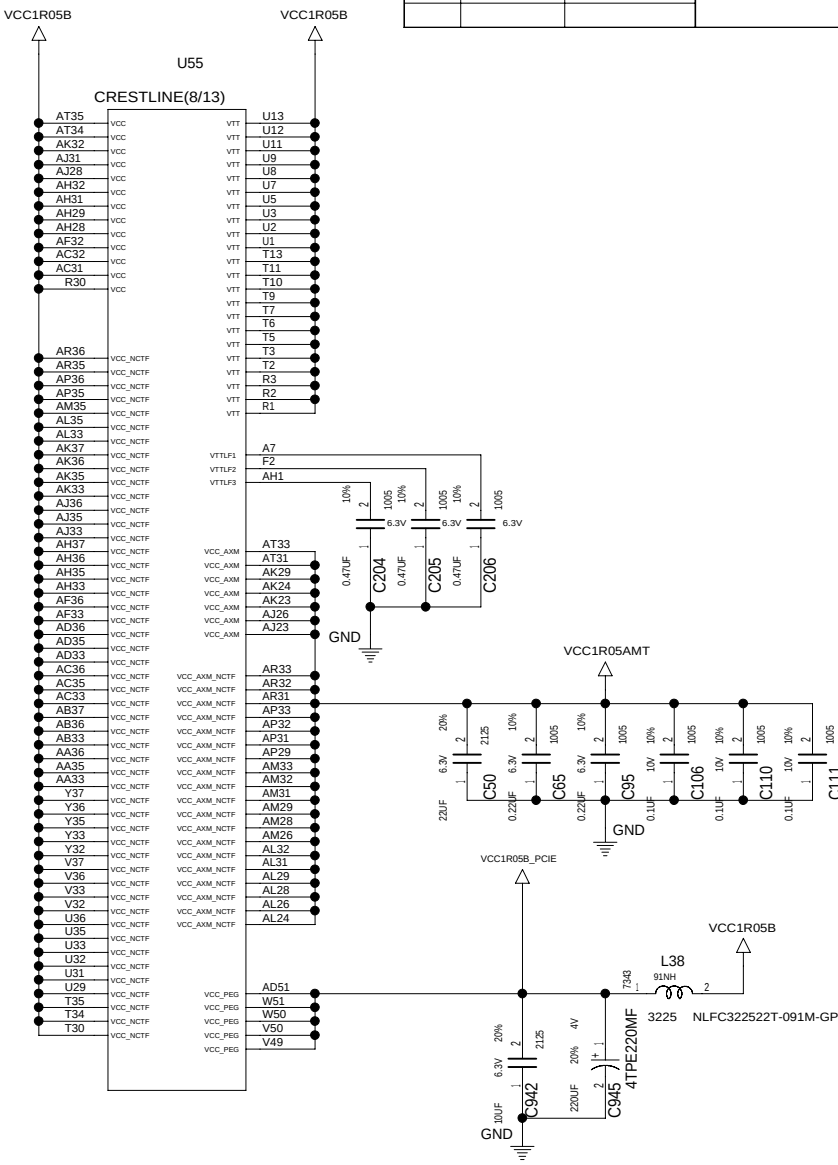

DESIGNER	K.Y	06/01/06	PART NO. 42W7622
CHECKED	Y.I	06/01/06	TITLE MLB-1 SVT
APPROVED	T.S	06/01/06	CRESTLINE(6/7) :VCC
CLASS	T.S	06/01/06	

THIS DOCUMENT IS THE PROPERTY OF LENOVO.ITS USE IS AUTHORIZED ONLY FOR RESPONDING TO A REQUEST FOR QUOTATION OR FOR THE PERFORMANCE OF WORK FOR LENOVO.ALL QUESTIONS MUST BE REFERRED TO THE LENOVO PURCHASING DEPARTMENT.

LENOVO CONFIDENTIAL

42W7622

	DATE	EC NO.	PART NO.
	20061220	L11403	42W7622
			DEVELOPMENT NO.
			Q/M 13 / 97

NOTE:M_A_A14 AND M_B_A14 SHOULD BE TREATED SAME AS OTHER MEMORY ADDRESS LINES

M_A_A<14..0> OUT 8.8N> 15.5A< 15.5M< 17.4E<
M_B_A<14..0> OUT 9.8M> 16.5B< 16.5M< 17.2E<

U55
CRESTLINE(10/13)

U55
CRESTLINE(11/13)

U55
CRESTLINE(12/13)

U55
CRESTLINE(13/13)

ADD TESTPAD ON BOTTOM SIDE

TP80 TESTPAD 61_02X23_62R
TP79 TESTPAD 61_02X23_62R
TP78 TESTPAD 61_02X23_62R
TP77 TESTPAD 61_02X23_62R
TP76 TESTPAD 61_02X23_62R

64.7A< OUT MCH_SOLDER_NW
64.6A< OUT MCH_SOLDER_SW

FOR SOLDER CRACK DETECT

R949 20K 5% 1/16W 100S
R950 20K 5% 1/16W 100S

GND GND GND GND GND GND GND GND

DESIGNER	K.Y	06/01/06	PART NO. 42W7622
CHECKED	Y.I	06/01/06	
APPROVED	T.S	06/01/06	TITLE MLB-1 SVT
CLASS	T.S	06/01/06	CALISTOGA(7/7):VCC/GND(NCTF)

THIS DOCUMENT IS THE PROPERTY OF LENOVO.ITS USE IS AUTHORIZED ONLY FOR RESPONDING TO A REQUEST FOR QUOTATION OR FOR THE PERFORMANCE OF WORK FOR LENOVO.ALL QUESTIONS MUST BE REFERRED TO THE LENOVO PURCHASING DEPARTMENT.

LENOVO CONFIDENTIAL

	DATE	EC NO.	PART NO.
	20061220	L11403	42W7622
			DEVELOPMENT NO.
			Q/M 14 / 97

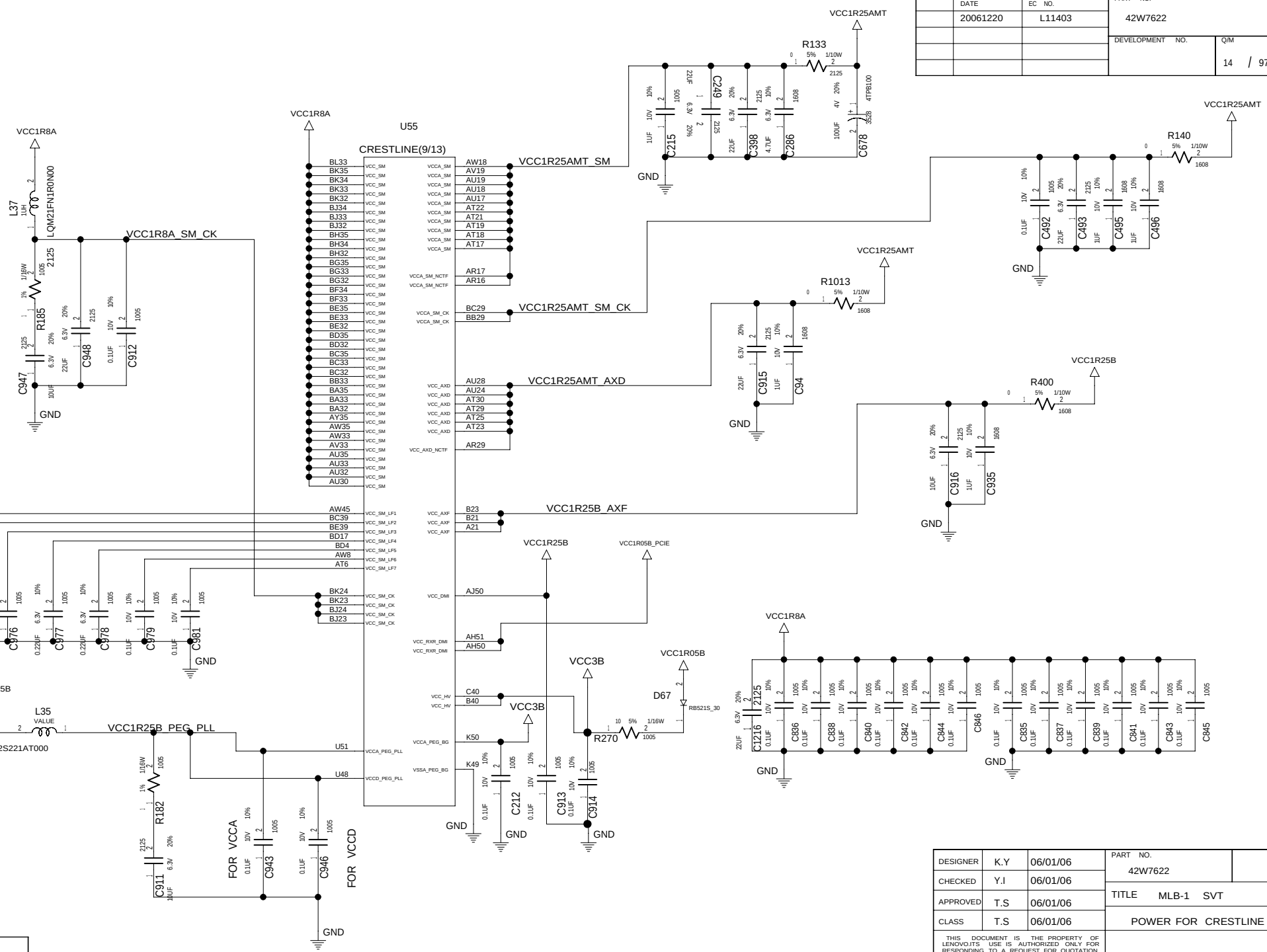

DESIGNER	K.Y	06/01/06	PART NO. 42W7622
CHECKED	Y.I	06/01/06	
APPROVED	T.S	06/01/06	TITLE MLB-1 SVT
CLASS	T.S	06/01/06	POWER FOR CRESTLINE

THIS DOCUMENT IS THE PROPERTY OF LENOVO.ITS USE IS AUTHORIZED ONLY FOR RESPONDING TO A REQUEST FOR QUOTATION OR FOR THE PERFORMANCE OF WORK FOR LENOVO.ALL QUESTIONS MUST BE REFERRED TO THE LENOVO PURCHASING DEPARTMENT.

LENOVO CONFIDENTIAL

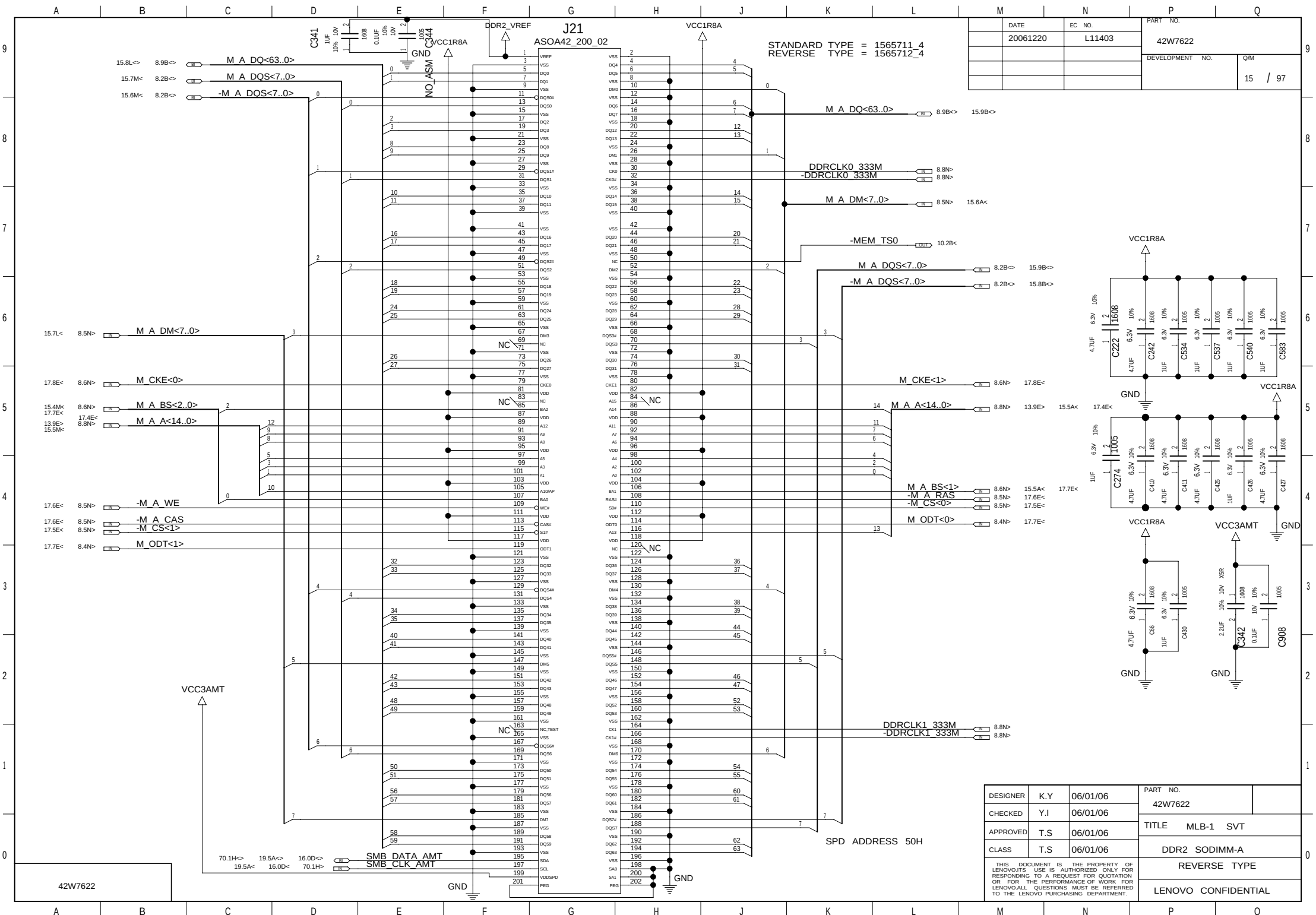

	DATE	EC NO.
	20061220	L11403

PART NO. 42W7622

DEVELOPMENT NO.

Q/M 15 / 97

DESIGNER	K.Y	06/01/06
CHECKED	Y.I	06/01/06
APPROVED	T.S	06/01/06
CLASS	T.S	06/01/06

THIS DOCUMENT IS THE PROPERTY OF LENOVO.ITS USE IS AUTHORIZED ONLY FOR RESPONDING TO A REQUEST FOR QUOTATION OR FOR THE PERFORMANCE OF WORK FOR LENOVO.ALL QUESTIONS MUST BE REFERRED TO THE LENOVO PURCHASING DEPARTMENT.

PART NO. 42W7622

TITLE MLB-1 SVT

DDR2 SODIMM-A

REVERSE TYPE

LENOVO CONFIDENTIAL

42W7622

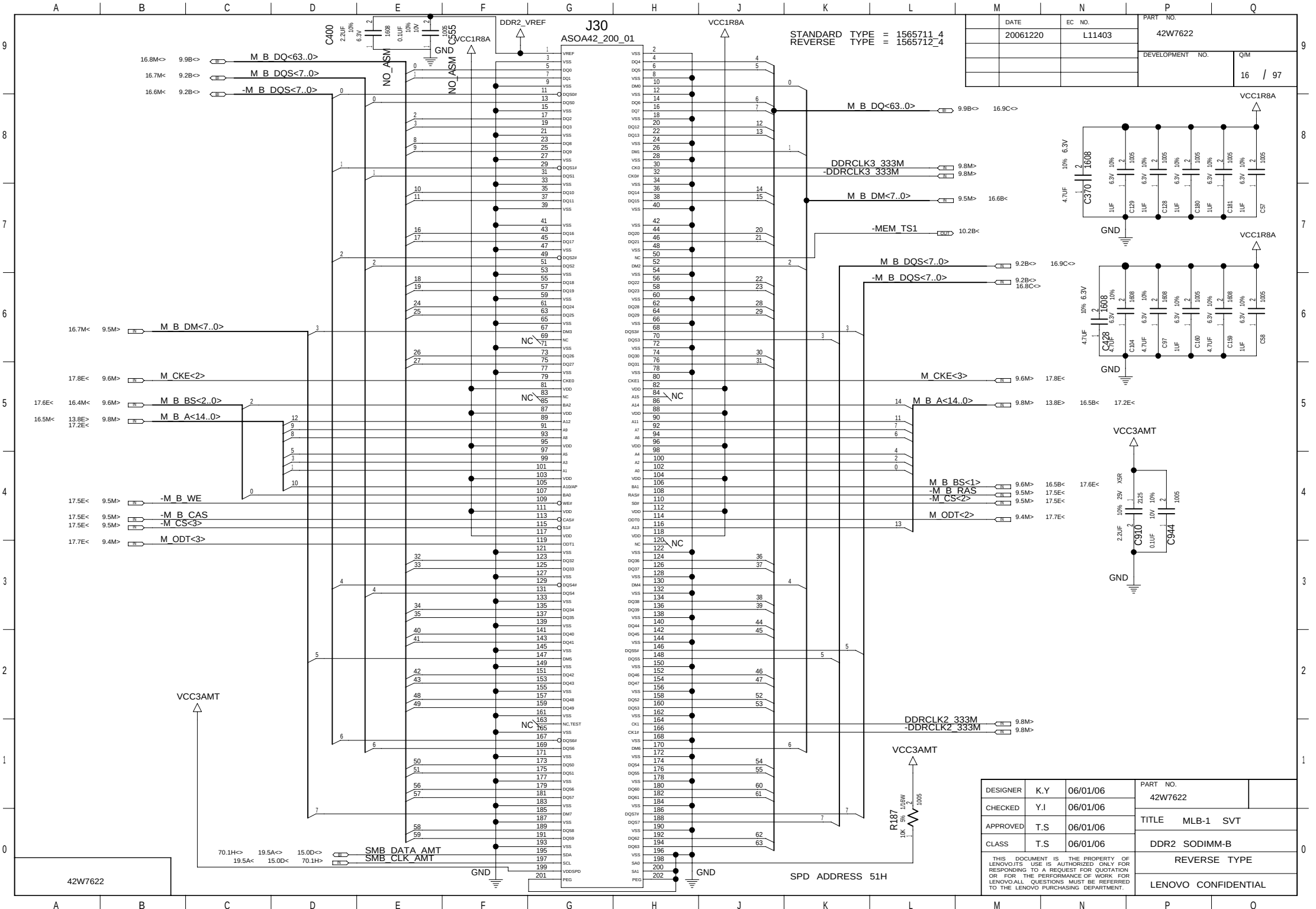
J30
ASOA42_200_01
STANDARD TYPE = 1565711_4
REVERSE TYPE = 1565712_4
DATE 20061220
EC NO. L11403
PART NO. 42W7622
DEVELOPMENT NO.
Q/M 16 / 97
M_B_DQ<63..0>
M_B_DQS<7..0>
-M_B_DQS<7..0>
M_B_DM<7..0>
M_CKE<2>
M_B_BS<2..0>
M_B_A<14..0>
-M_B_WE
-M_B_CAS
-M_CS<3>
M_ODT<3>
DDRCLK3_333M
-DDRCLK3_333M
-MEM_TS1
M_CKE<3>
M_B_A<14..0>
M_B_BS<1>
-M_B_RAS
-M_CS<2>
M_ODT<2>
DDRCLK2_333M
-DDRCLK2_333M
SMB_DATA_AMT
SMB_CLK_AMT
SPD ADDRESS 51H
VCC1R8A
VCC3AMT
DDR2_VREF
GND
NO_ASM
C400
C555
C370
C428
C910
C944
R187
DESIGNER K.Y 06/01/06
CHECKED Y.I 06/01/06
APPROVED T.S 06/01/06
CLASS T.S 06/01/06
PART NO. 42W7622
TITLE MLB-1 SVT
DDR2 SODIMM-B
REVERSE TYPE
LENOVO CONFIDENTIAL
THIS DOCUMENT IS THE PROPERTY OF LENOVO.ITS USE IS AUTHORIZED ONLY FOR RESPONDING TO A REQUEST FOR QUOTATION OR FOR THE PERFORMANCE OF WORK FOR LENOVO.ALL QUESTIONS MUST BE REFERRED TO THE LENOVO PURCHASING DEPARTMENT.
42W7622

	DATE	EC NO.	PART NO.
	20061220	L11403	42W7622
			DEVELOPMENT NO. / Q/M: 17 / 97

VCC0R9A

M_CKE<3..0>
16.5M< 16.5B< 15.5M< 15.5A< 9.6M> 8.6N>
R778 R784 R790 R797

M_ODT<3..0>
16.4M< 16.3B< 15.4M< 15.3A< 9.4M> 8.4N>
R189 R202 R232 R254

M_A_BS<2..0>
15.5A< 15.4M< 8.6N>
R190 R203 R233

-M_A_RAS
-M_A_CAS
-M_A_WE
15.4M< 8.5N>
15.4A< 8.5N>
15.4A< 8.5N>
R783 R789 R794

M_B_BS<2..0>
16.5B< 16.4M< 9.6M>
R192 R204 R236

-M_B_RAS
-M_B_CAS
-M_B_WE
16.4M< 9.5M>
16.4B< 9.5M>
16.4B< 9.5M>
R194 R205 R238

-M_CS<3..0>
16.4M< 16.4B< 15.4M< 15.4A< 9.5M> 8.5N>
R13 R14 R795 R796

M_A_A<14..0>
15.5M< 15.5A< 13.9E> 8.8N>
R779 R785 R791 R798
R780 R786 R792 R799
R781 R787 R777 R793
R800 R206 R71

M_B_A<14..0>
16.5M< 16.5B< 13.8E> 9.8M>
R195 R216 R239 R268
R196 R217 R243 R275
R197 R229 R248 R276
R198 R230 R69

All resistors: 56 1/16W 5% 1005

DESIGNER	K.Y	06/01/06	PART NO. 42W7622
CHECKED	Y.I	06/01/06	
APPROVED	T.S	06/01/06	TITLE MLB-1 SVT
CLASS	T.S	06/01/06	DDR-2 TERMINATION

THIS DOCUMENT IS THE PROPERTY OF LENOVO.ITS USE IS AUTHORIZED ONLY FOR RESPONDING TO A REQUEST FOR QUOTATION OR FOR THE PERFORMANCE OF WORK FOR LENOVO.ALL QUESTIONS MUST BE REFERRED TO THE LENOVO PURCHASING DEPARTMENT.

LENOVO CONFIDENTIAL

	DATE	EC NO.	PART NO.
	20061220	L11403	42W7622
			DEVELOPMENT NO.
			Q/M 18 / 97

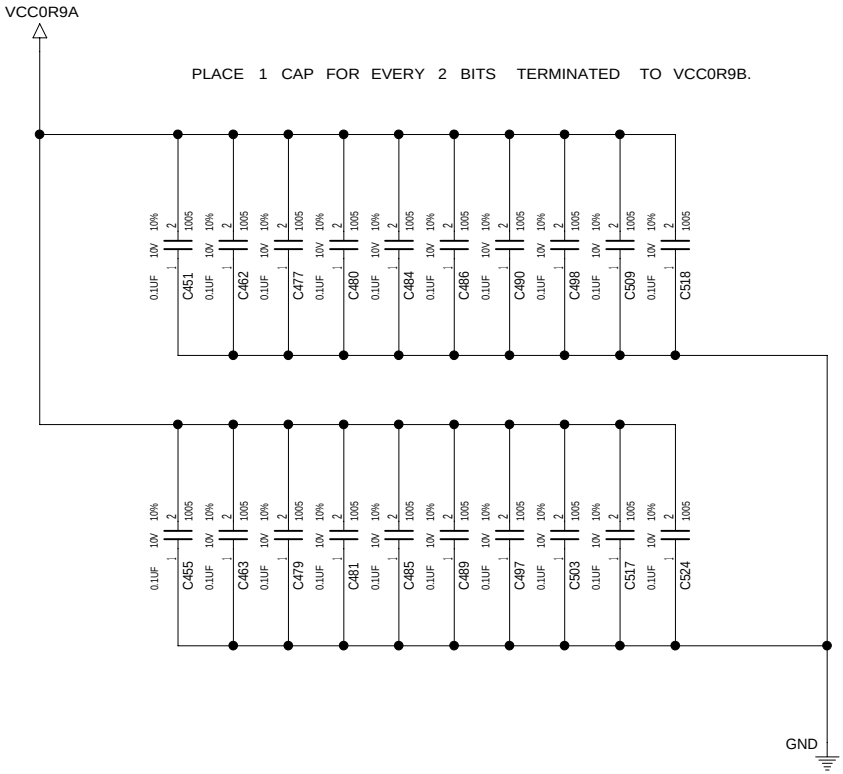

DESIGNER	K.Y	06/01/06	PART NO. 42W7622
CHECKED	Y.I	06/01/06	
APPROVED	T.S	06/01/06	TITLE MLB-1 SVT
CLASS	T.S	06/01/06	DDR-2 DECOUPLING

THIS DOCUMENT IS THE PROPERTY OF LENOVO.ITS USE IS AUTHORIZED ONLY FOR RESPONDING TO A REQUEST FOR QUOTATION OR FOR THE PERFORMANCE OF WORK FOR LENOVO.ALL QUESTIONS MUST BE REFERRED TO THE LENOVO PURCHASING DEPARTMENT.

LENOVO CONFIDENTIAL

PLACE AT LEAST 1 CAP FOR EACH VDD PINS

DATE	EC NO.
20061220	L11403

PART NO. 42W7622

DEVELOPMENT NO.

Q/M 19 / 97

SRC#	OE#	DEVICE
0		WWAN
1	OE#1	DOCK
2		GFX
3	OE#3	WLAN
4	OE#4	ROBSON
5	OE#5	SATA
6	OE#6	EXPRESS CARD
7		ICH
8	OE#8	MCH

BSEL2	BSEL1	BSEL0	
FSC	FSB	FSA	CPU
0	1	1	166M
0	1	0	200M
0	0	0	266M
1	0	0	333M

RIVER KDS FCX-03 DSX530G

DESIGNER	K.Y	06/01/06
CHECKED	Y.I	06/01/06
APPROVED	T.S	06/01/06
CLASS	T.S	06/01/06

PART NO. 42W7622

TITLE MLB-1 SVT

CLOCK GEN(ICS954309)

THIS DOCUMENT IS THE PROPERTY OF LENOVO.ITS USE IS AUTHORIZED ONLY FOR RESPONDING TO A REQUEST FOR QUOTATION OR FOR THE PERFORMANCE OF WORK FOR LENOVO.ALL QUESTIONS MUST BE REFERRED TO THE LENOVO PURCHASING DEPARTMENT.

LENOVO CONFIDENTIAL

42W7622

	DATE	EC NO.	PART NO.
	20061220	L11403	42W7622
			DEVELOPMENT NO.
			Q/M 20 / 97

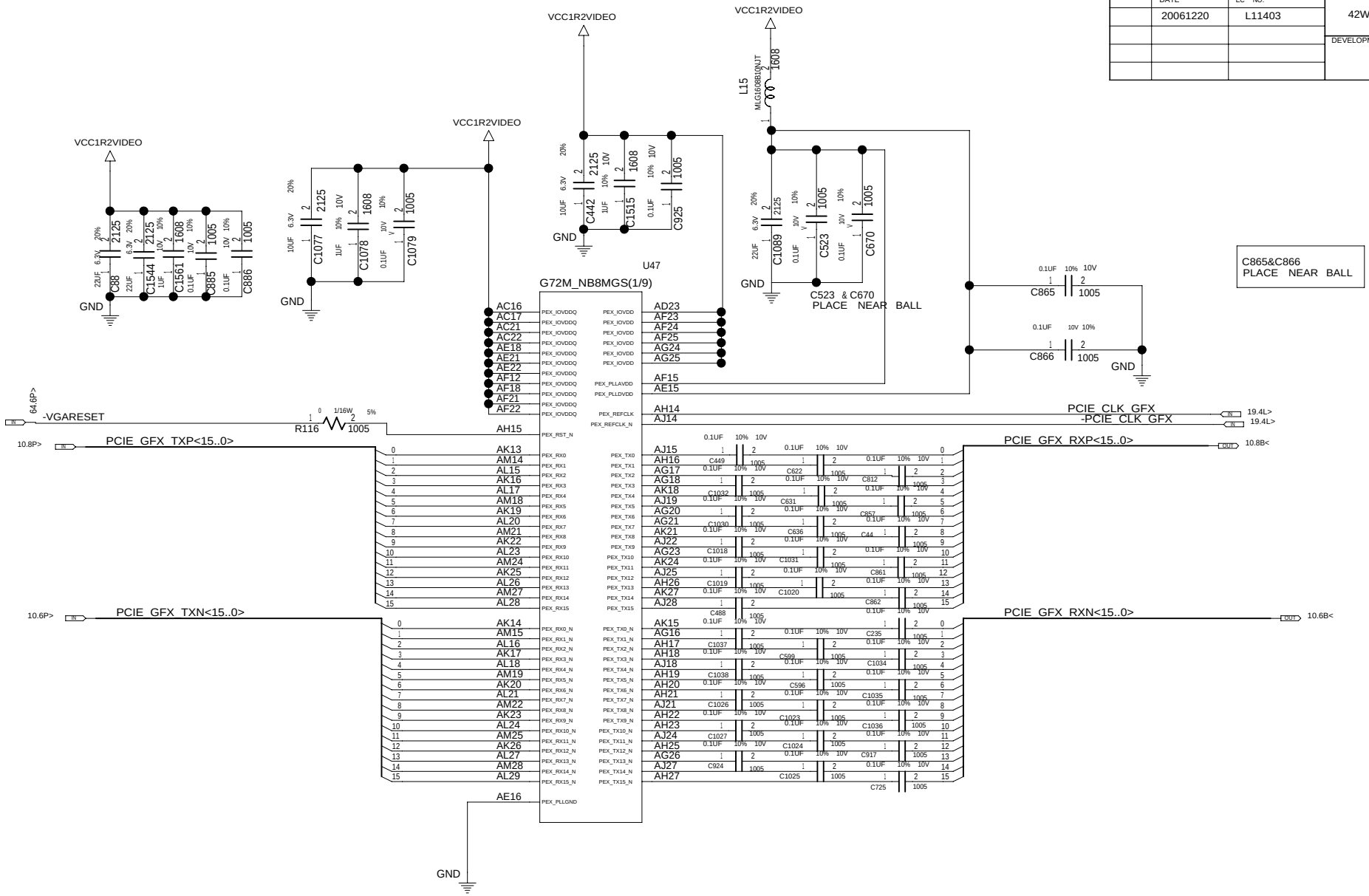

DESIGNER	K.Y	06/01/06	PART NO. 42W7622
CHECKED	Y.I	06/01/06	
APPROVED	T.S	06/01/06	TITLE MLB-1 SVT
CLASS	T.S	06/01/06	ATI M5X(1/6) : PEG I/F

THIS DOCUMENT IS THE PROPERTY OF LENOVO.ITS USE IS AUTHORIZED ONLY FOR RESPONDING TO A REQUEST FOR QUOTATION OR FOR THE PERFORMANCE OF WORK FOR LENOVO.ALL QUESTIONS MUST BE REFERRED TO THE LENOVO PURCHASING DEPARTMENT.

LENOVO CONFIDENTIAL

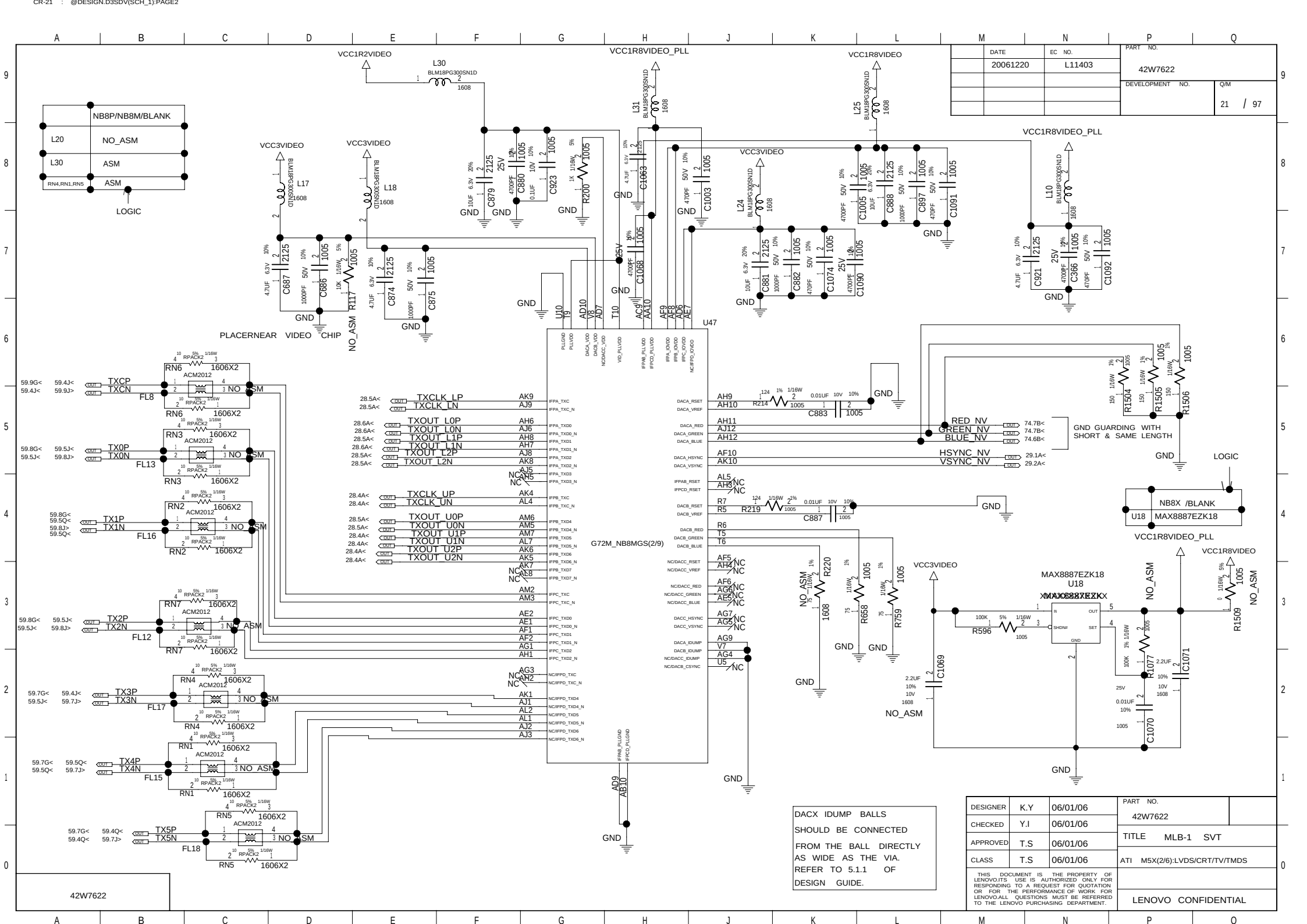

	DATE	EC NO.
	20061220	L11403

PART NO. 42W7622

DEVELOPMENT NO.

Q/M 21 / 97

DESIGNER	K.Y	06/01/06
CHECKED	Y.I	06/01/06
APPROVED	T.S	06/01/06
CLASS	T.S	06/01/06

PART NO. 42W7622

TITLE MLB-1 SVT

ATI M5X(2/6):LVDS/CRT/TV/TMDS

THIS DOCUMENT IS THE PROPERTY OF LENOVO.ITS USE IS AUTHORIZED ONLY FOR RESPONDING TO A REQUEST FOR QUOTATION OR FOR THE PERFORMANCE OF WORK FOR LENOVO.ALL QUESTIONS MUST BE REFERRED TO THE LENOVO PURCHASING DEPARTMENT.

LENOVO CONFIDENTIAL

42W7622

	DATE	EC NO.	PART NO.
	20061220	L11403	42W7622
			DEVELOPMENT NO.
			Q/M 22 / 97

VCC1R2VIDEO

L26 BLM18PG300SN1D 1608

FILTER

C922 10UF 6.3V 20% 2125

C936 4700PF 50V 10% 1005

C939 470PF 50V 10% 1005

GND

VCC1R2VIDEO

L34 BLM18PG300SN1D 1608

C1072 10UF 6.3V 20% 2125

C1073 0.1UF 10V 10% 1005

GND

NB8P/NB8M /BLANK

L34	ASM
C1072	ASM
C1073	ASM

LOGIC

FBADQS_RN<7..0> OUT 27.3B< 27.3G<

FBADQS_WP<7..0> OUT 27.2G< 27.3B<

U47

G72M_NB8MGS(3/9)

FBAD<63..0> 27.9B< 27.8H< OUT

FBA_CLK0 OUT 27.3B< 27.7M<

-FBA_CLK0 OUT 27.3B< 27.6M<

FBA_CLK1 OUT 27.3G< 27.6M<

-FBA_CLK1 OUT 27.3G< 27.5M<

-FBA_WE OUT 27.4B< 27.4G<

-FBA_CS0 OUT 27.4B< 27.4G<

-FBA_BA2_CS1 OUT 27.5G< 27.6B<

FBADQM<7..0> OUT 27.2B< 27.2G<

FBA_A<11..0> OUT 27.5B< 27.5G<

FBA_RST OUT 27.1G< 27.2B<

-FBA_CAS OUT 27.3G< 27.4B<

FBA_CKE OUT 27.3G< 27.4B<

-FBA_RAS OUT 27.4B< 27.4G<

FBA_BA1 OUT 27.5G< 27.6B<

FBB_A<5..2> OUT 27.5G<

FBA_BA0 OUT 27.5G< 27.6B<

VCC1R8VIDEO

R764 45.3 1/16W 1% 1005

R765 40.2 1/16W 1% 1005

R771 24.9 1% 1/16W 1005

GND

TP501 TESTPAD 0.5

NB8X /BLANK

R628	NO_ASM
C1075	NO_ASM
R650	NO_ASM
R404	NO_ASM
Q86	NO_ASM

LOGIC

NO_ASM R404 1.82K 1/16W 1% 1005

NO_ASM R628 1.05K 1/16W 1% 1005

NO_ASM R650 2.49K 1/16W 1% 1005

NO_ASM C1075 0.1UF 10V 10% 1005

Q86 BSS138

FBVREF_ALTV 26.4B< 23.7K>

G72M_NB8MGS(4/9)

NV_THERM_SDA 69.8D<

NV_THERM_SCL 69.8D<

R441 10K 1/16W 5% 1005

R461 10K 1/16W 5% 1005

DESIGNER	K.Y	06/01/06
CHECKED	Y.I	06/01/06
APPROVED	T.S	06/01/06
CLASS	T.S	06/01/06

THIS DOCUMENT IS THE PROPERTY OF LENOVO.ITS USE IS AUTHORIZED ONLY FOR RESPONDING TO A REQUEST FOR QUOTATION OR FOR THE PERFORMANCE OF WORK FOR LENOVO.ALL QUESTIONS MUST BE REFERRED TO THE LENOVO PURCHASING DEPARTMENT.

PART NO. 42W7622

TITLE MLB-1 SVT

ATI M5X(3/6):CLK/GPIO

LENOVO CONFIDENTIAL

42W7622

	DATE	EC NO.	PART NO.
	20061220	L11403	42W7622
			DEVELOPMENT NO.
			Q/M 23 / 97

VGA_LEVEL_SHIFT
DDCCLK_ID3
DDCDATA_ID1
VGA_LEVEL_SHIFT
TMDS_SCL
TMDS_SDA
SPWG_EDID_CLK
SPWG_EDID_DATA
VIDEO_CLK_27M_SS
HDCPSCL
HDCPSDA
VIDEO_CLK_27M_NSS
DVI_DTCT
FBVREF_ALTV
GPIO13_PWR_CTRL0
GPIO14_PWR_CTRL1
PANEL_BKLT_CTRL
PANEL_POWER_ON
PM_ENABLE0
PM_ENABLE1
PM_ENABLE2
-NV_ALERT
PM_ENABLE3
VGA_BLON
TESTPAD ARE REQUIRED FOR GPIO PINS.
0.5 VIA FOR TESEPAD
VIAS ARE REQUIRED AS TEST POINTS FOR MIO PINS.
THESE RESISTORS MUST BE PLACED ON THE SAME SIDE OF PCB.
PLACE NEAR THE BRANCH POINT
NEAR VIDEO CHIP
PCI_DEVID_4
PCI_DEVID_0
PCI_DEVID_1
PCI_DEVID_2
PCI_DEVID_3
MOBILE_MODE
PEX_PLL_EN_TERM
3GIO_PADCFG_LUT_ADR0
3GIO_PADCFG_LUT_ADR1
3GIO_PADCFG_LUT_ADR2
RAM_CFG_0
RAM_CFG_1
RAM_CFG_2
RAM_CFG_3
LOGIC

	SAMSUNG	HYNIX
STRAP	1111	1110
R261	ASM	NO_ASM
R286	ASM	ASM
R325	ASM	ASM
R341	ASM	ASM
R342	NO_ASM	ASM
R353	NO_ASM	ASM
R375	NO_ASM	NO_ASM
R378	NO_ASM	NO_ASM

	NB8P/BLANK	NB8M
DEVID	040C	0429
R453	NO_ASM	ASM
R501	NO_ASM	NO_ASM
R454	ASM	NO_ASM
R1510	ASM	ASM
R548	NO_ASM	NO_ASM

DESIGNER	K.Y	06/01/06
CHECKED	Y.I	06/01/06
APPROVED	T.S	06/01/06
CLASS	T.S	06/01/06

PART NO. 42W7622

TITLE MLB-1 SVT

ATI M5X(4/6):ANALOG POWER

THIS DOCUMENT IS THE PROPERTY OF LENOVO.ITS USE IS AUTHORIZED ONLY FOR RESPONDING TO A REQUEST FOR QUOTATION OR FOR THE PERFORMANCE OF WORK FOR LENOVO.ALL QUESTIONS MUST BE REFERRED TO THE LENOVO PURCHASING DEPARTMENT.

LENOVO CONFIDENTIAL

42W7622

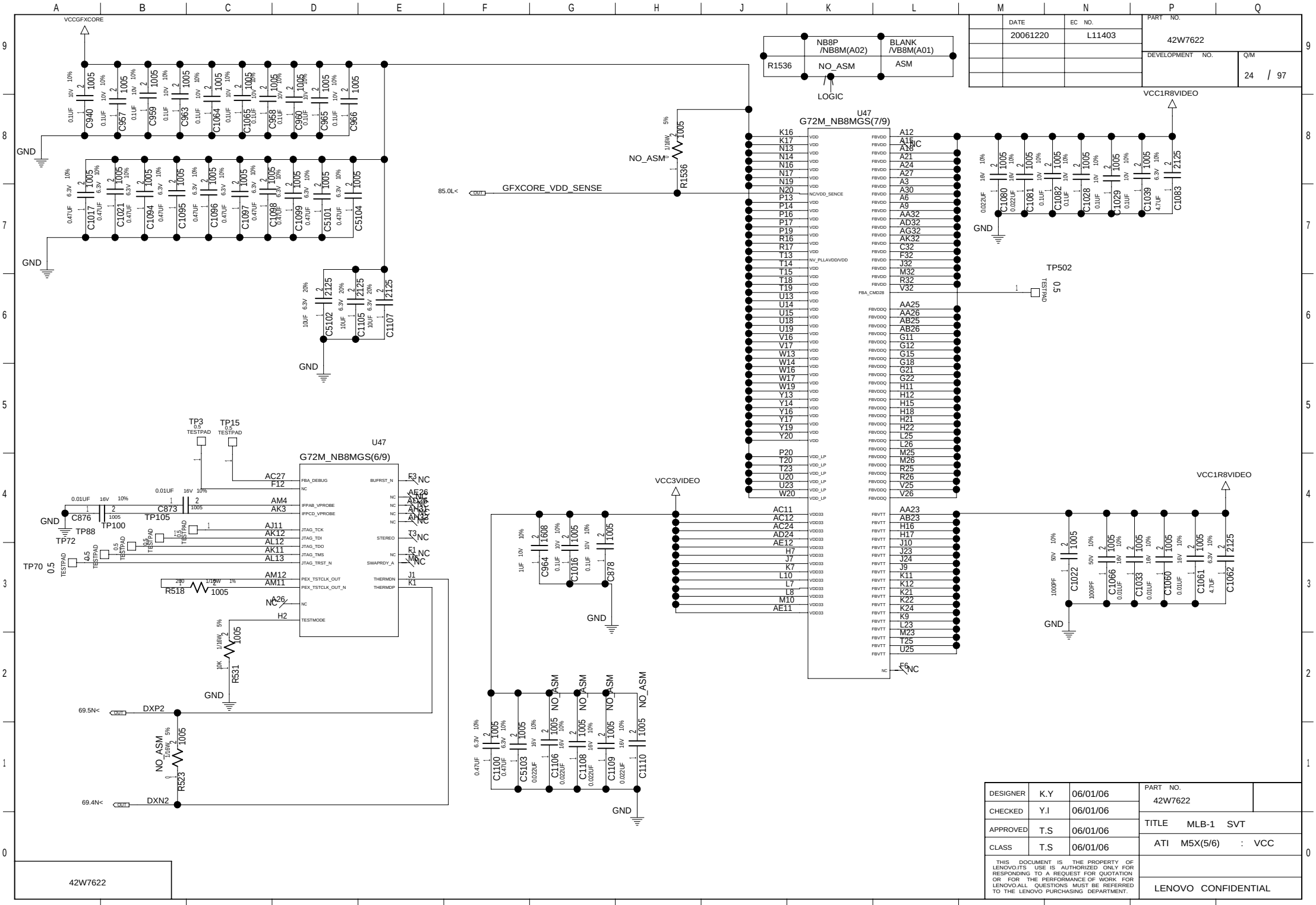

	DATE	EC NO.	PART NO.
	20061220	L11403	42W7622
			DEVELOPMENT NO. / Q/M
			24 / 97

DESIGNER	K.Y	06/01/06
CHECKED	Y.I	06/01/06
APPROVED	T.S	06/01/06
CLASS	T.S	06/01/06

PART NO. 42W7622

TITLE MLB-1 SVT

ATI M5X(5/6) : VCC

THIS DOCUMENT IS THE PROPERTY OF LENOVO.ITS USE IS AUTHORIZED ONLY FOR RESPONDING TO A REQUEST FOR QUOTATION OR FOR THE PERFORMANCE OF WORK FOR LENOVO.ALL QUESTIONS MUST BE REFERRED TO THE LENOVO PURCHASING DEPARTMENT.

LENOVO CONFIDENTIAL

	DATE	EC NO.	PART NO.
	20061220	L11403	42W7622
			DEVELOPMENT NO.
			Q/M 25 / 97

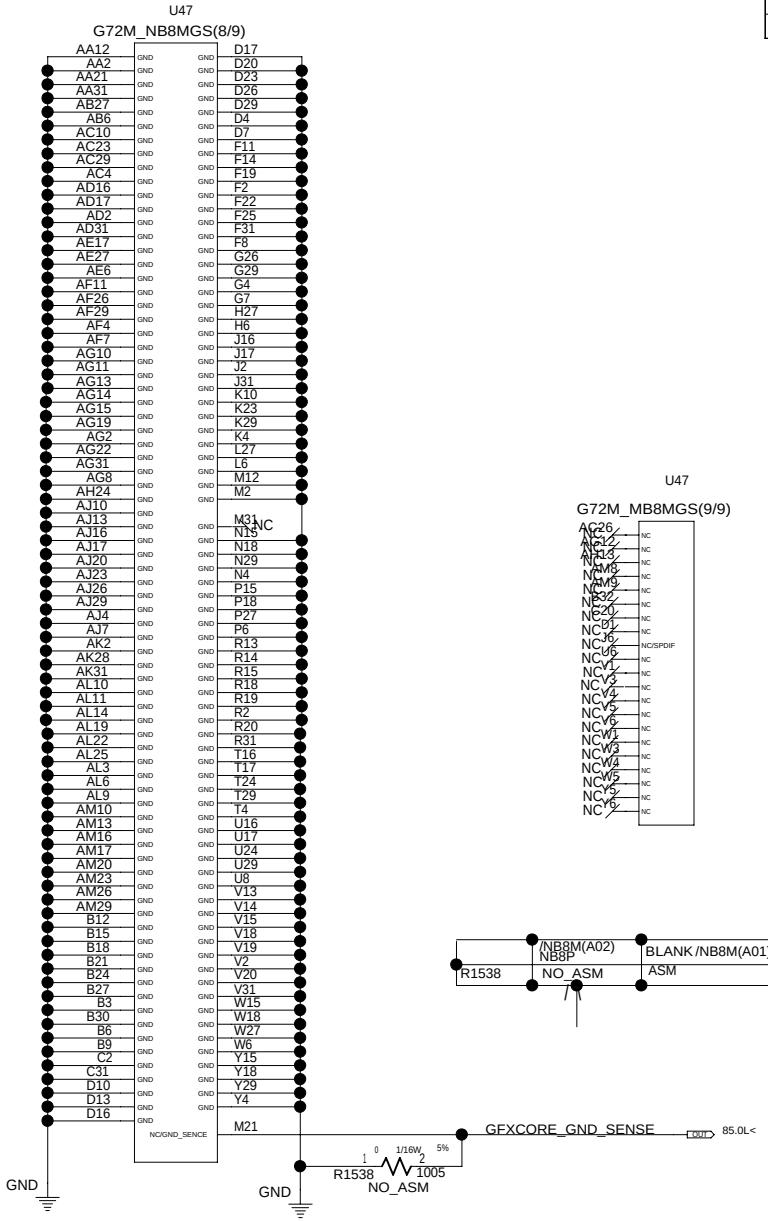

			PART NO.
DESIGNER	K.Y	06/01/06	42W7622
CHECKED	Y.I	06/01/06	TITLE MLB-1 SVT
APPROVED	T.S	06/01/06	ATI M5X(6/6) : GND
CLASS	T.S	06/01/06	

THIS DOCUMENT IS THE PROPERTY OF LENOVO.ITS USE IS AUTHORIZED ONLY FOR RESPONDING TO A REQUEST FOR QUOTATION OR FOR THE PERFORMANCE OF WORK FOR LENOVO.ALL QUESTIONS MUST BE REFERRED TO THE LENOVO PURCHASING DEPARTMENT.

LENOVO CONFIDENTIAL

	DATE	EC NO.	PART NO.
	20061220	L11403	42W7622
			DEVELOPMENT NO. / Q/M: 26 / 97

NB8X

Q67,Q87,R604,R788

ASM

PLEASE COMPONENTS CLOSE TO THE RESPECTIVE PINS ON THE MEMORU

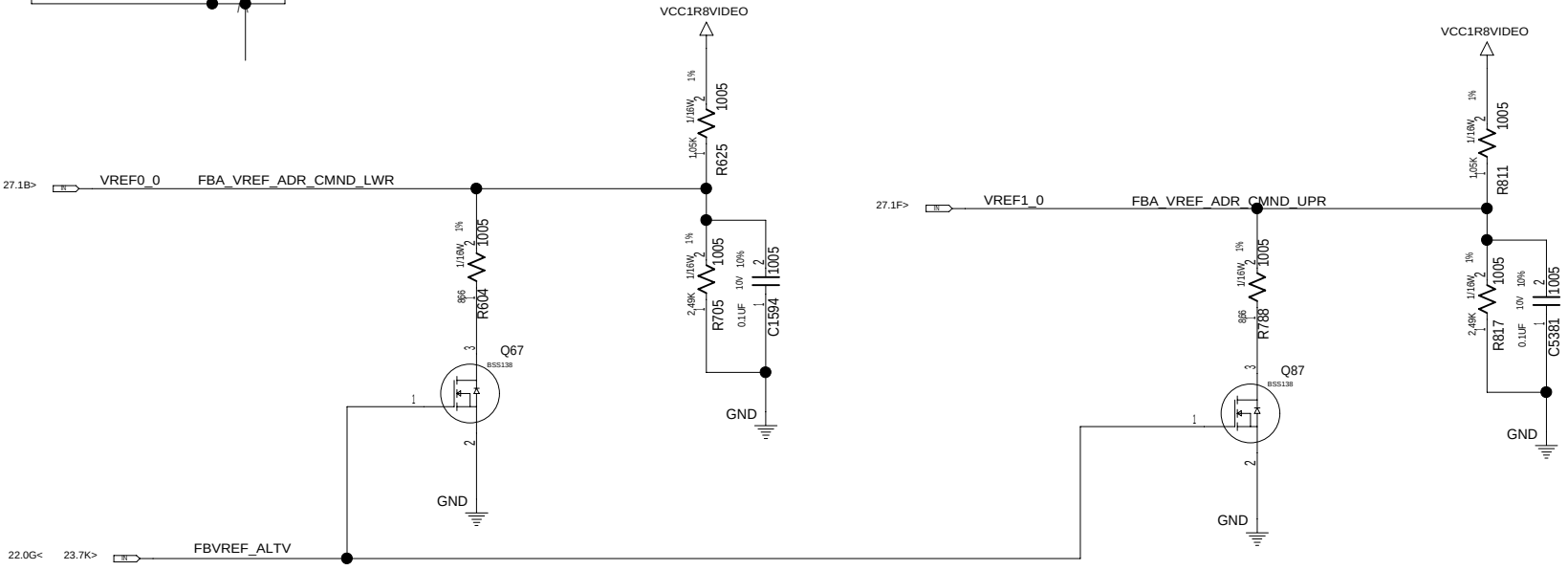

			PART NO.
DESIGNER	K.Y	06/01/06	42W7622
CHECKED	Y.I	06/01/06	TITLE MLB-1 SVT
APPROVED	T.S	06/01/06	
CLASS	T.S	06/01/06	

THIS DOCUMENT IS THE PROPERTY OF LENOVO.ITS USE IS AUTHORIZED ONLY FOR RESPONDING TO A REQUEST FOR QUOTATION OR FOR THE PERFORMANCE OF WORK FOR LENOVO.ALL QUESTIONS MUST BE REFERRED TO THE LENOVO PURCHASING DEPARTMENT.

LENOVO CONFIDENTIAL

K4J52324QE-BC14(SAMSUNG)

U35
HY5RS123235FP

(TOP SIDE)

VCC1R8VIDEO

FBAD<63..0>

-FBA_BA2_CS1
FBA_BA1
FBA_BA0

FBA_A<11..0>

-FBA_CS0
-FBA_WE
-FBA_RAS
-FBA_CAS
FBA_CKE
FBA_CLK0
-FBA_CLK0

FBADQS_RN<7..0>
FBADQS_WP<7..0>
FBADQM<7..0>

FBA_RST

R393 243 1% 1/16W 1005
VREF0_0

NEAR K1/K12 PIN

C994 0.1UF 10% 10V 1005
C996 0.1UF 10% 10V 1005

GND

K4J52324QE-BC14(SAMSUNG)

(TOP SIDE)

U46
HY5RS123235FP

VCC1R8VIDEO

FBAD<63..0>

-FBA_BA2_CS1
FBA_BA1
FBA_BA0

FBA_A<11..0>

FBB_A<5..2>

-FBA_CS0
-FBA_WE
-FBA_RAS
-FBA_CAS
FBA_CKE
FBA_CLK1
-FBA_CLK1

FBADQS_RN<7..0>
FBADQS_WP<7..0>
FBADQM<7..0>

FBA_RST

R458 243 1% 1/16W 1005
VREF1_0

NEAR K1/K12 PIN

C1009 0.1UF 10% 10V 1005
C1014 0.1UF 10% 10V 1005

GND

FBA_CLK0
-FBA_CLK0
FBA_CLK1
-FBA_CLK1

R1512 1005 1% 1/16W
R1513 1005 1% 1/16W

VCC1R8VIDEO

C825 2125 20% 6.3V 10UF
C826 2125 20% 6.3V 100F
C870 2125 20% 6.3V 1UF
C872 1608 10% 10V 1UF
C884 1005 10% 10V 0.01UF
C993 1005 10% 10V 0.01UF
C995 1005 10% 10V 0.01UF
C997 1005 10% 10V 0.01UF
C1000 1005 10% 25V 0.01UF
C1001 1005 10% 25V 0.01UF
C1002 1005

VCC1R8VIDEO

C1010 2125 20% 6.3V 10UF
C1011 2125 20% 6.3V 100F
C1045 2125 20% 6.3V 1UF
C1046 1608 10% 10V 1UF
C1047 1005 10% 10V 0.01UF
C1050 1005 10% 10V 0.01UF
C1051 1005 10% 10V 0.01UF
C1056 1005 10% 10V 0.01UF
C1057 1005 10% 25V 0.01UF
C1058 1005 10% 25V 0.01UF
C1059 1005

GND

	DATE	EC NO.
	20061220	L11403

PART NO. 42W7622

DEVELOPMENT NO.

Q/M 27 / 97

MEMORY CHANNEL A

DESIGNER	K.Y	06/01/06
CHECKED	Y.I	06/01/06
APPROVED	T.S	06/01/06
CLASS	T.S	06/01/06

THIS DOCUMENT IS THE PROPERTY OF LENOVO.ITS USE IS AUTHORIZED ONLY FOR RESPONDING TO A REQUEST FOR QUOTATION OR FOR THE PERFORMANCE OF WORK FOR LENOVO.ALL QUESTIONS MUST BE REFERRED TO THE LENOVO PURCHASING DEPARTMENT.

PART NO. 42W7622

TITLE MLB-1 SVT

MENORY CHANEL A

LENOVO CONFIDENTIAL

42W7622

	DATE	EC NO.	PART NO.
	20061220	L11403	42W7622
			DEVELOPMENT NO. / Q/M
			28 / 97

J5 LCD CONN

5_353190_6

1	RESERVED	LCD_PRESENCE#	2
3	RESERVED	RESERVED	4
5	GND	RESERVED	6
7	GND	GPIO_BT	8
9	VCC3P	BDC_ON	10
11	VCC3P	COEXISTENCE_2	12
13	VCC3P	-BDC_PRESENCE	14
15	VCC3P	COEXISTENCE_1	16
17	VCC3P	VCC3M	18
19	VCC3P	USBP4+	20
21	VCC3B	USBP4-	22
23	SPWG_EDID_CLK	GND	24
25	SPWG_EDID_DATA	#LEDPWR	26
27	GND	#LEDACDC	28
29	TXOUT_L0N	#LEDSECURITY	30
31	TXOUT_L0P	#LEDCPSLOCK	32
33	GND	#LEDNUMLOCK	34
35	TXOUT_L1N	LID_SWITCH	36
37	TXOUT_L1P	#LEDSUS	38
39	GND	#LEDFUEL0	40
41	TXOUT_L2N	#LEDFUEL1	42
43	TXOUT_L2P	#LEDDRIVE	44
45	GND	#LED_WWAN	46
47	TXCLK_LN	#LED_WLAN	48
49	TXCLK_LP	GND	50
51	GND	GND	52
53	TXOUT_U0N	GND	54
55	TXOUT_U0P	VBL16	56
57	GND	VBL16	58
59	TXOUT_U1N	VBL16	60
61	TXOUT_U1P	GND	62
63	GND	VCC3P	64
65	TXOUT_U2N	PANEL_BKLT_CTRL	66
67	TXOUT_U2P	BACKLIGHT_ON	68
69	GND	WIRELESS_GRNP	70
71	TXCLK_UN	VCC3M	72
73	TXCLK_UP	RESERVED	74
75	GND	RESERVED	76
77	Q5_3PIN	RESERVED	78
79	VCC5M	RESERVED	80

NC: 1, 3, 5, 6, 8, 10, 30

WIDE PATTERN-10MIL

-LCD_PRESENCE OUT 32.5A<

BDC_ON IN 60.3A>
WIFI_BUSY BI 57.1L<>
-BDC_PRESENCE OUT 32.4P<
BT_BUSY BI 57.1L<>
USBP6+ IN 32.6N<>
USBP6- IN 32.6N<>
-LEDPWR IN 64.3N>
LID_SWITCH OUT 61.3P<
-LEDSUS IN 64.2N>
-LEDFUEL0 IN 64.2N>
-LEDFUEL1 IN 64.2N>
-LEDDRIVE IN 64.4N>
-LED_WWAN IN 57.7C>
-LED_WLAN IN 57.3C>
PANEL_BKLT_CTRL IN 23.7L>
BACKLIGHT_ON IN 64.4N>
USBP4+ BI 32.7N<>
USBP4- BI 32.7N<>

23.4A<> SPWG_EDID_CLK
23.4A<> SPWG_EDID_DATA
21.5E> TXOUT_L0N
21.5E> TXOUT_L0P
21.5E> TXOUT_L1N
21.5E> TXOUT_L1P
21.5E> TXOUT_L2N
21.5E> TXOUT_L2P
21.5E> TXCLK_LN
21.5E> TXCLK_LP
21.4E> TXOUT_U0N
21.4E> TXOUT_U0P
21.4E> TXOUT_U1N
21.4E> TXOUT_U1P
21.3E> TXOUT_U2N
21.4E> TXOUT_U2P
21.4E> TXCLK_UN
21.4E> TXCLK_UP

Q106 DTC114EE — ACDC_LED — 60.3A>
Q109 DTC114EE — LEDCPSLOCK — 61.3P>
Q110 DTC114EE — LEDNUMLOCK — 61.3P>
Q5 DTC114EE — KBD_LIGHT_ON — 61.3P>

VCC3B, VCC3P, VCC5M, VCC3M, VBL20, VCC5B, GND, VINT20

C315 1UF 10% 10V 1608
C311 0.1UF 10% 10V 1005
C308 0.01UF 10% 25V 1005
R174 100 5% 1/10W 2125
F8 FUSE 0.5A 434500
C307 0.01UF 10% 25V 1005
C310 0.1UF 10% 25V 1608
C313 1UF 10% 25V 1608
R668 47K 5% 1/16W 1005 NO_ASM
R8 100 5% 1/16W 1005
F16 FUSE 0.5A 434500
C1215 220PF 10% 50V 1005
C130 0.01UF 10% 25V 1005
C931 1000PF 10% 50V 1005 NO_ASM
C933 1000PF 10% 50V 1005 NO_ASM
C927 1000PF 10% 50V 1005 NO_ASM
C929 1000PF 10% 50V 1005 NO_ASM
C521 1000PF 10% 50V 1005 NO_ASM
C930 1000PF 10% 50V 1005 NO_ASM
C932 1000PF 10% 50V 1005 NO_ASM
C928 1000PF 10% 50V 1005 NO_ASM
C926 1000PF 10% 50V 1005 NO_ASM
C934 1000PF 10% 50V 1005 NO_ASM

F3 434003
Q22 TPCF8001
R361 47 5% 1/16W-1/10W 1608
D63 RB521S_30
91.5K> VCC3P_DRV
C603 0.047UF 10% 25V 1608
R714 47K 5% 1/16W 1005
F7 433003
C724 25V 0.01UF 10% 1005

DESIGNER	K.Y	06/01/06
CHECKED	Y.I	06/01/06
APPROVED	T.S	06/01/06
CLASS	T.S	06/01/06

THIS DOCUMENT IS THE PROPERTY OF LENOVO.ITS USE IS AUTHORIZED ONLY FOR RESPONDING TO A REQUEST FOR QUOTATION OR FOR THE PERFORMANCE OF WORK FOR LENOVO.ALL QUESTIONS MUST BE REFERRED TO THE LENOVO PURCHASING DEPARTMENT.

PART NO. 42W7622

TITLE MLB-1 SVT

LCD CONNECTOR

LENOVO CONFIDENTIAL

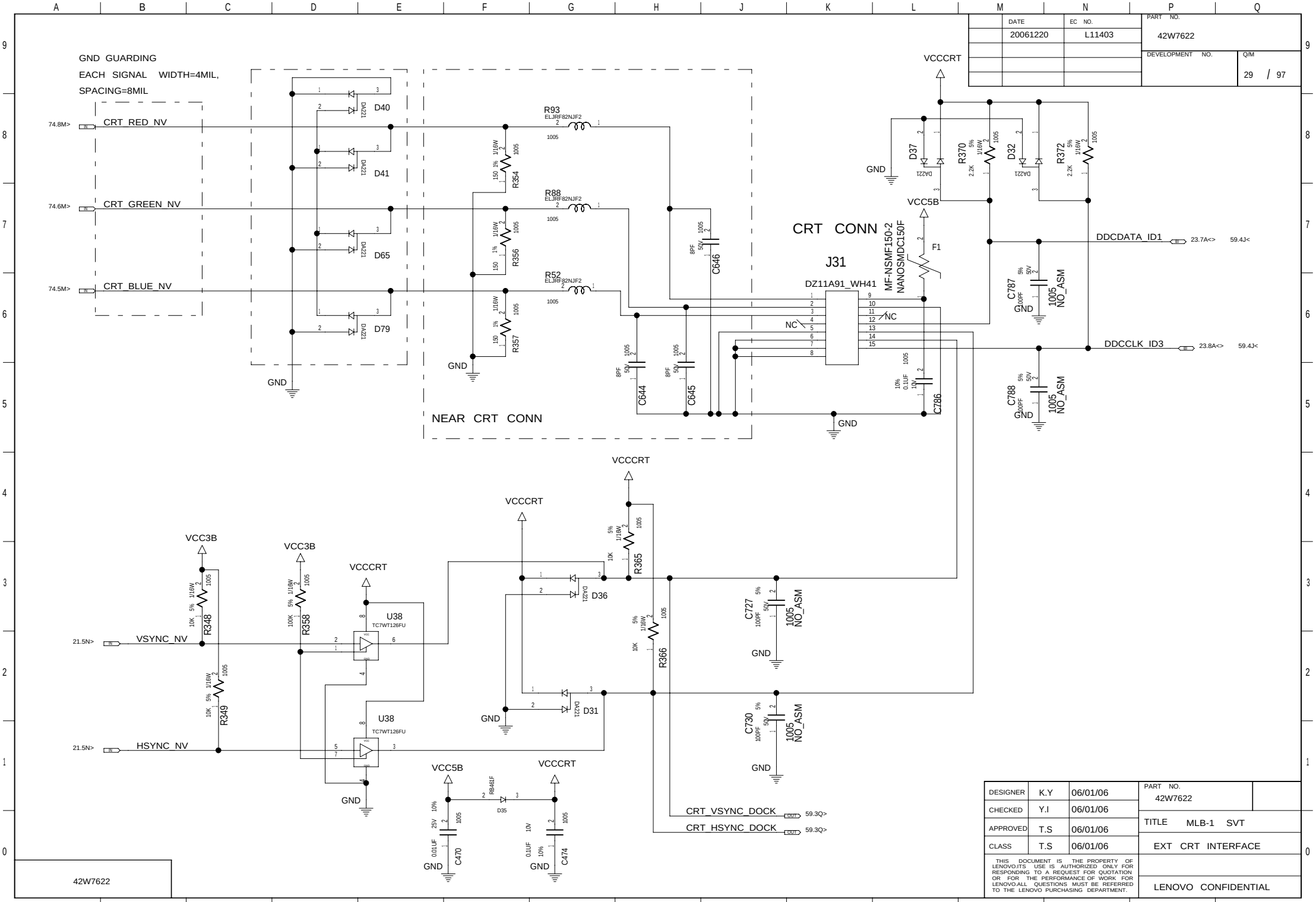
DATE 20061220
EC NO. L11403
PART NO. 42W7622
DEVELOPMENT NO.
Q/M 29 / 97
GND GUARDING
EACH SIGNAL WIDTH=4MIL,
SPACING=8MIL
74.8M> CRT_RED_NV
74.6M> CRT_GREEN_NV
74.5M> CRT_BLUE_NV
D40
D41
D65
D79
R93 ELJRF82NJF2
R88 ELJRF82NJF2
R52 ELJRF82NJF2
R354
R356
R357
C646
C644
C645
NEAR CRT CONN
CRT CONN
J31
DZ11A91_WH41
MF-NSMF150-2
NANOSMDC150F
F1
VCCCRT
VCC5B
D37
D32
R370
R372
C787
C788
C786
DDCDATA_ID1 23.7A<> 59.4J<
DDCCLK_ID3 23.8A<> 59.4J<
NC
GND
VCC3B
R348
R349
R358
U38 TC7WT126FU
21.5N> VSYNC_NV
21.5N> HSYNC_NV
R365
R366
D36
D31
C727
C730
CRT_VSYNC_DOCK 59.3Q>
CRT_HSYNC_DOCK 59.3Q>
RB461F
D35
C470
C474
42W7622
DESIGNER K.Y 06/01/06
CHECKED Y.I 06/01/06
APPROVED T.S 06/01/06
CLASS T.S 06/01/06
PART NO. 42W7622
TITLE MLB-1 SVT
EXT CRT INTERFACE
LENOVO CONFIDENTIAL
THIS DOCUMENT IS THE PROPERTY OF LENOVO.ITS USE IS AUTHORIZED ONLY FOR RESPONDING TO A REQUEST FOR QUOTATION OR FOR THE PERFORMANCE OF WORK FOR LENOVO.ALL QUESTIONS MUST BE REFERRED TO THE LENOVO PURCHASING DEPARTMENT.

	DATE	EC NO.	PART NO.
	20061220	L11403	42W7622
			DEVELOPMENT NO. / Q/M: 30 / 97

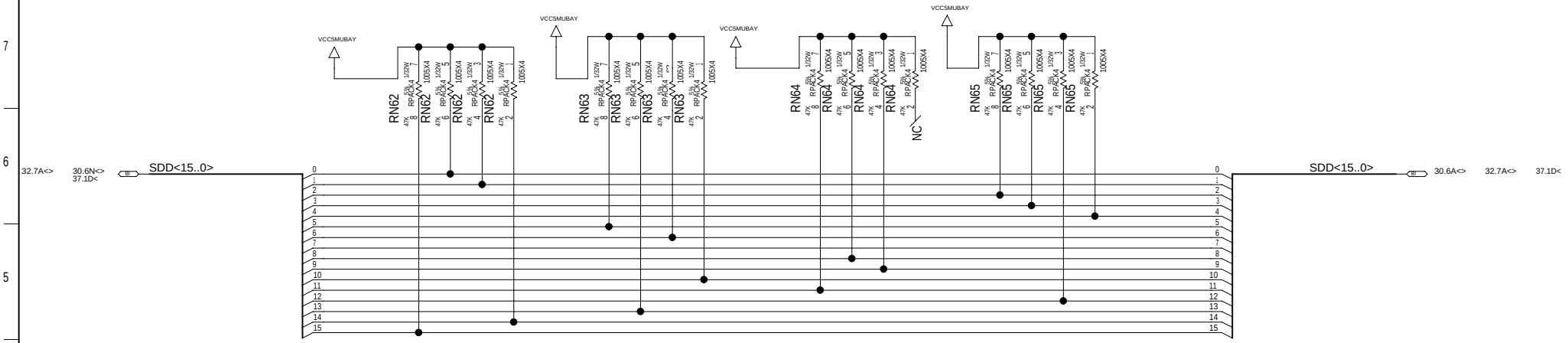

DESIGNER	K.Y	06/01/06	PART NO. 42W7622
CHECKED	Y.I	06/01/06	
APPROVED	T.S	06/01/06	TITLE MLB-1 SVT
CLASS	T.S	06/01/06	PATA I/F PU

THIS DOCUMENT IS THE PROPERTY OF LENOVO.ITS USE IS AUTHORIZED ONLY FOR RESPONDING TO A REQUEST FOR QUOTATION OR FOR THE PERFORMANCE OF WORK FOR LENOVO.ALL QUESTIONS MUST BE REFERRED TO THE LENOVO PURCHASING DEPARTMENT.

LENOVO CONFIDENTIAL

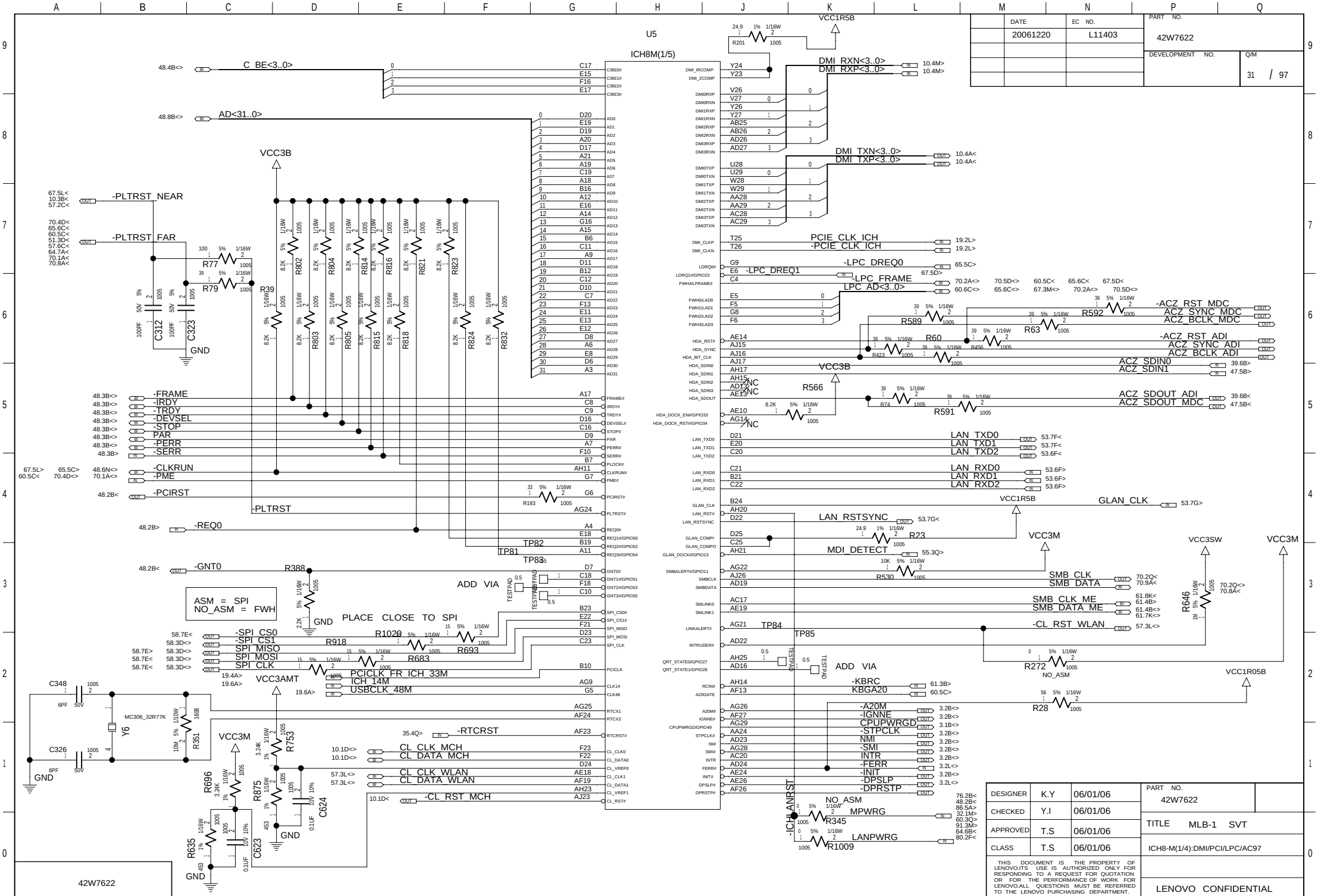

	DATE	EC NO.	PART NO.
	20061220	L11403	42W7622
			DEVELOPMENT NO.
			Q/M 31 / 97

DESIGNER	K.Y	06/01/06	PART NO. 42W7622
CHECKED	Y.I	06/01/06	
APPROVED	T.S	06/01/06	TITLE MLB-1 SVT
CLASS	T.S	06/01/06	ICH8-M(1/4):DMI/PCI/LPC/AC97

THIS DOCUMENT IS THE PROPERTY OF LENOVO.ITS USE IS AUTHORIZED ONLY FOR RESPONDING TO A REQUEST FOR QUOTATION OR FOR THE PERFORMANCE OF WORK FOR LENOVO.ALL QUESTIONS MUST BE REFERRED TO THE LENOVO PURCHASING DEPARTMENT.

LENOVO CONFIDENTIAL

42W7622

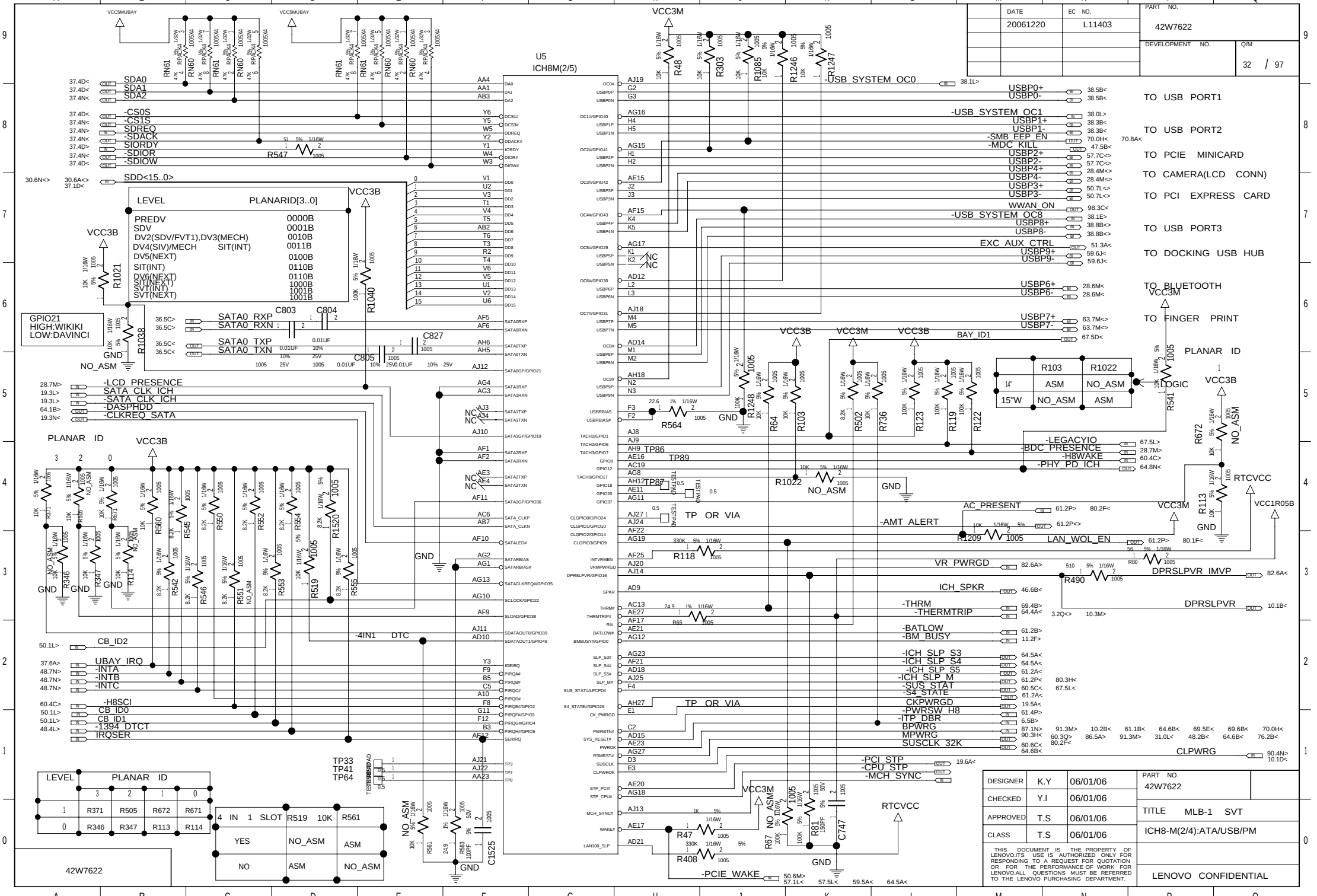

	DATE	EC NO.
	20061220	L11403

PART NO. 42W7622

DEVELOPMENT NO.

Q/M 32 / 97

DESIGNER	K.Y	06/01/06
CHECKED	Y.I	06/01/06
APPROVED	T.S	06/01/06
CLASS	T.S	06/01/06

PART NO. 42W7622

TITLE MLB-1 SVT

ICH8-M(2/4):ATA/USB/PM

THIS DOCUMENT IS THE PROPERTY OF LENOVO.ITS USE IS AUTHORIZED ONLY FOR RESPONDING TO A REQUEST FOR QUOTATION OR FOR THE PERFORMANCE OF WORK FOR LENOVO.ALL QUESTIONS MUST BE REFERRED TO THE LENOVO PURCHASING DEPARTMENT.

LENOVO CONFIDENTIAL

	DATE	EC NO.	PART NO.
	20061220	L11403	42W7622
			DEVELOPMENT NO.
			Q/M 33 / 97

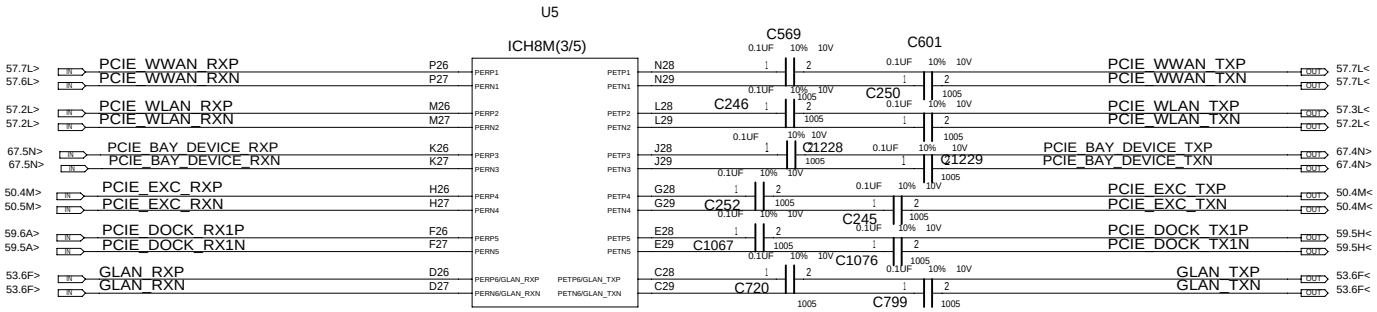

DESIGNER	K.Y	06/01/06	PART NO. 42W7622
CHECKED	Y.I	06/01/06	
APPROVED	T.S	06/01/06	TITLE MLB-1 SVT
CLASS	T.S	06/01/06	ICH8-M(3/4):PCI EXPRESS

THIS DOCUMENT IS THE PROPERTY OF LENOVO.ITS USE IS AUTHORIZED ONLY FOR RESPONDING TO A REQUEST FOR QUOTATION OR FOR THE PERFORMANCE OF WORK FOR LENOVO.ALL QUESTIONS MUST BE REFERRED TO THE LENOVO PURCHASING DEPARTMENT.

LENOVO CONFIDENTIAL

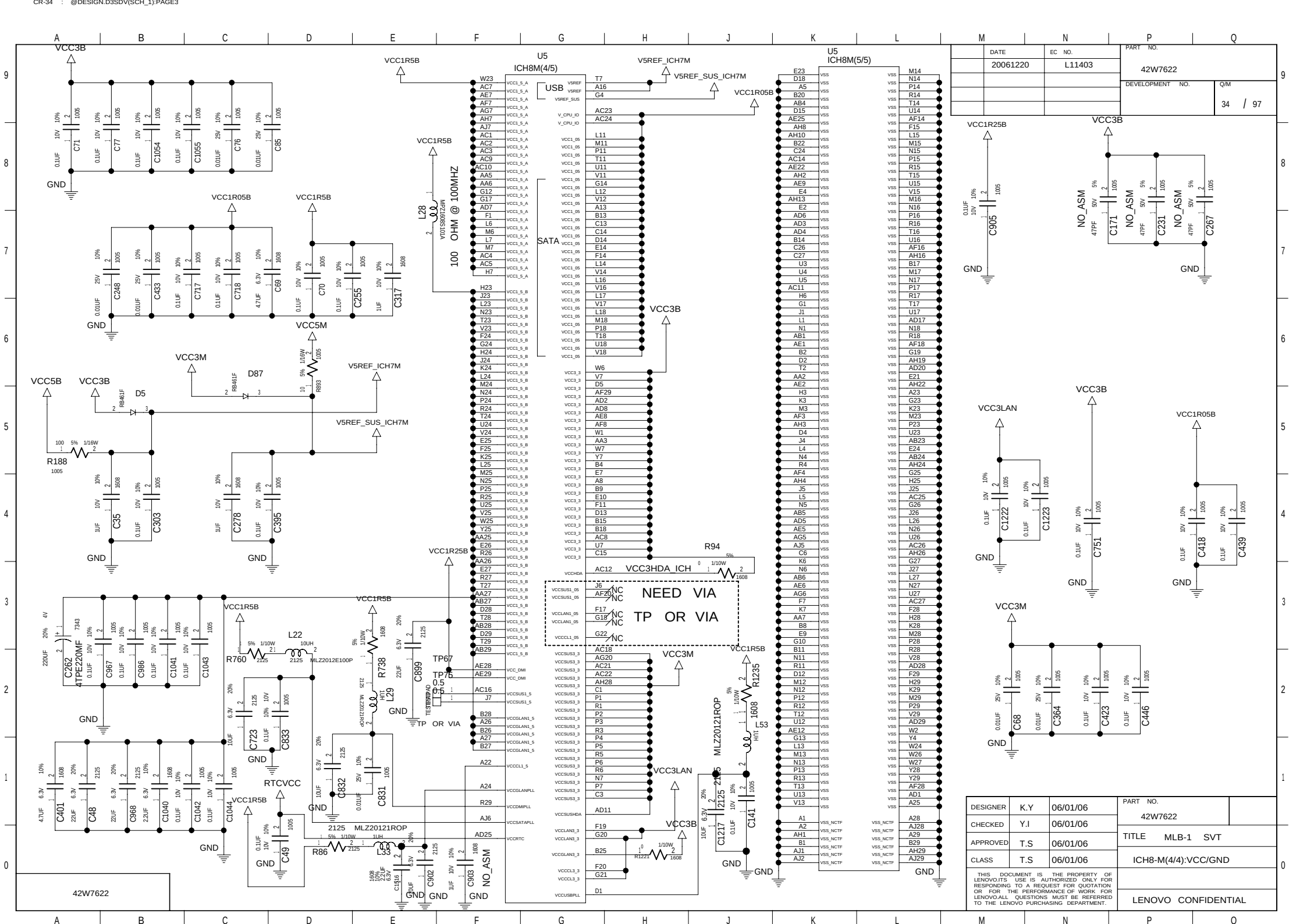

THIS DOCUMENT IS THE PROPERTY OF LENOVO.ITS USE IS AUTHORIZED ONLY FOR RESPONDING TO A REQUEST FOR QUOTATION OR FOR THE PERFORMANCE OF WORK FOR LENOVO.ALL QUESTIONS MUST BE REFERRED TO THE LENOVO PURCHASING DEPARTMENT.

	DATE	EC NO.	PART NO.
	20061220	L11403	42W7622
			DEVELOPMENT NO.
			Q/M 35 / 97

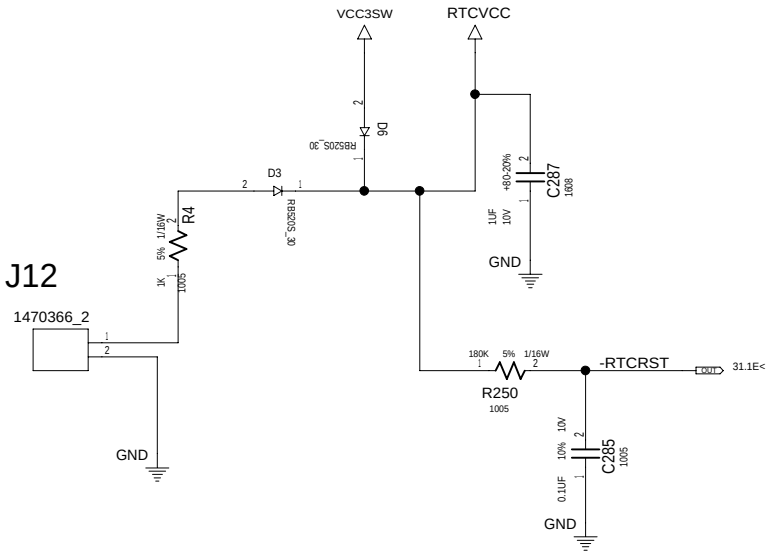

DESIGNER	K.Y	06/01/06	PART NO. 42W7622
CHECKED	Y.I	06/01/06	
APPROVED	T.S	06/01/06	TITLE MLB-1 SVT
CLASS	T.S	06/01/06	FWH,RTC BATTERY

THIS DOCUMENT IS THE PROPERTY OF LENOVO.ITS USE IS AUTHORIZED ONLY FOR RESPONDING TO A REQUEST FOR QUOTATION OR FOR THE PERFORMANCE OF WORK FOR LENOVO.ALL QUESTIONS MUST BE REFERRED TO THE LENOVO PURCHASING DEPARTMENT.

LENOVO CONFIDENTIAL

	DATE	EC NO.	PART NO.
	20061220	L11403	42W7622
			DEVELOPMENT NO. / Q/M: 36 / 97

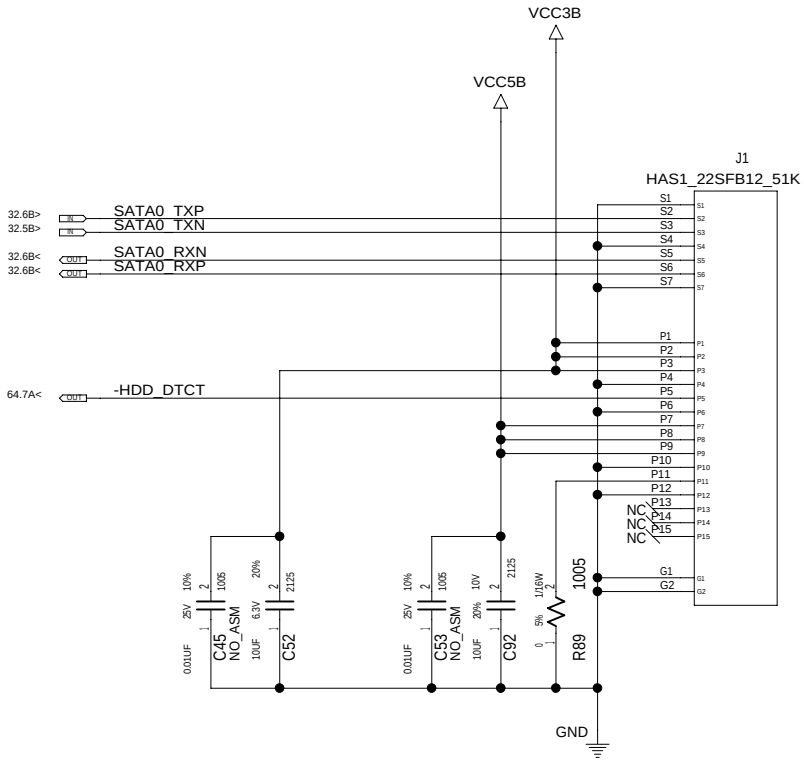

DESIGNER	K.Y	06/01/06	PART NO. 42W7622
CHECKED	Y.I	06/01/06	
APPROVED	T.S	06/01/06	TITLE MLB-1 SVT
CLASS	T.S	06/01/06	SATA HDD CONN

THIS DOCUMENT IS THE PROPERTY OF LENOVO.ITS USE IS AUTHORIZED ONLY FOR RESPONDING TO A REQUEST FOR QUOTATION OR FOR THE PERFORMANCE OF WORK FOR LENOVO.ALL QUESTIONS MUST BE REFERRED TO THE LENOVO PURCHASING DEPARTMENT.

LENOVO CONFIDENTIAL

	DATE	EC NO.	PART NO.
	20061220	L11403	42W7622
			DEVELOPMENT NO. / Q/M: 37 / 97

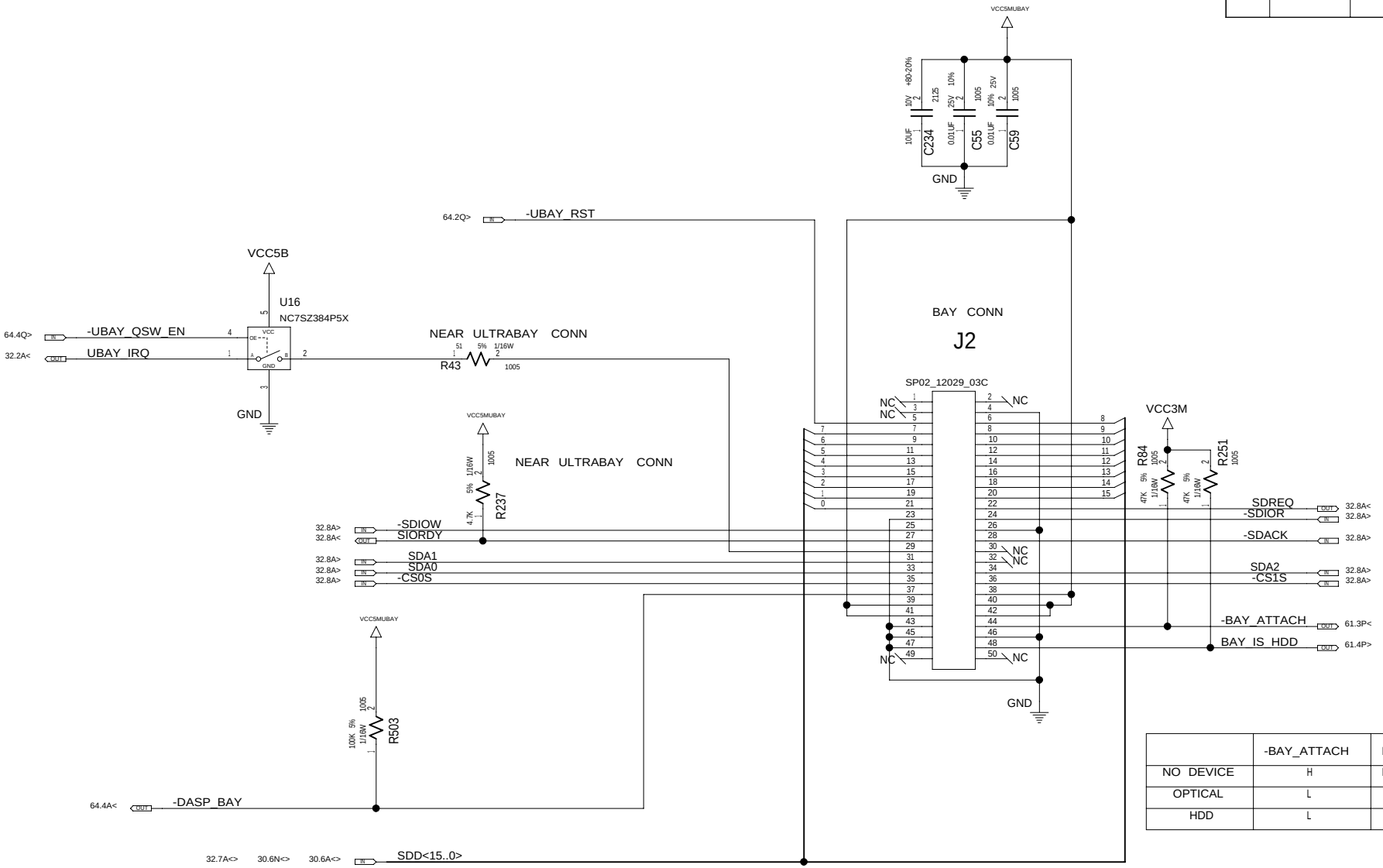

	-BAY_ATTACH	BAY_IS_HDD
NO DEVICE	H	DON'T CARE
OPTICAL	L	L
HDD	L	H

DESIGNER	K.Y	06/01/06	PART NO. 42W7622
CHECKED	Y.I	06/01/06	
APPROVED	T.S	06/01/06	TITLE MLB-1 SVT
CLASS	T.S	06/01/06	BAY I/F CONN

THIS DOCUMENT IS THE PROPERTY OF LENOVO.ITS USE IS AUTHORIZED ONLY FOR RESPONDING TO A REQUEST FOR QUOTATION OR FOR THE PERFORMANCE OF WORK FOR LENOVO.ALL QUESTIONS MUST BE REFERRED TO THE LENOVO PURCHASING DEPARTMENT.

LENOVO CONFIDENTIAL

	DATE	EC NO.	PART NO.
	20061220	L11403	42W7622
			DEVELOPMENT NO. / Q/M: 38 / 97

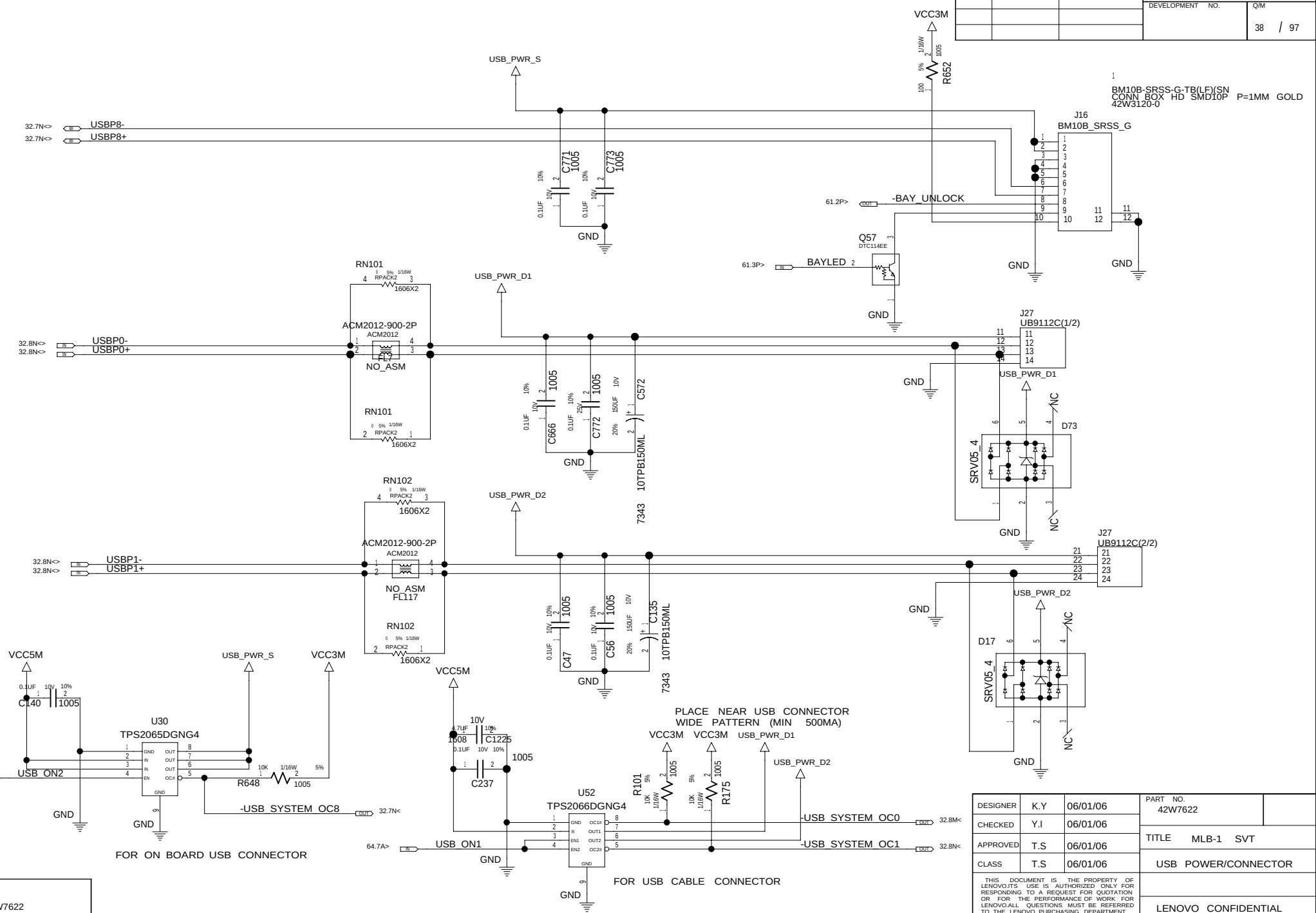

DESIGNER	K.Y	06/01/06
CHECKED	Y.I	06/01/06
APPROVED	T.S	06/01/06
CLASS	T.S	06/01/06

PART NO. 42W7622

TITLE MLB-1 SVT

USB POWER/CONNECTOR

THIS DOCUMENT IS THE PROPERTY OF LENOVO.ITS USE IS AUTHORIZED ONLY FOR RESPONDING TO A REQUEST FOR QUOTATION OR FOR THE PERFORMANCE OF WORK FOR LENOVO.ALL QUESTIONS MUST BE REFERRED TO THE LENOVO PURCHASING DEPARTMENT.

LENOVO CONFIDENTIAL

	DATE	EC NO.	PART NO.
	20061220	L11403	42W7622
			DEVELOPMENT NO. / Q/M
			39 / 97

PLACE 0.1UF CAPS NEAR PIN 3

EACH NC PIN MUST HAVE TEST POINT PAD.

NC PIN LIST: PIN 2,3,29,31,32,33,37,40,43,44,45,46

PLACE UNDER AD1981HD

U8 AD1984JCP

DESIGNER	K.Y	06/01/06
CHECKED	Y.I	06/01/06
APPROVED	T.S	06/01/06
CLASS	T.S	06/01/06

THIS DOCUMENT IS THE PROPERTY OF LENOVO.ITS USE IS AUTHORIZED ONLY FOR RESPONDING TO A REQUEST FOR QUOTATION OR FOR THE PERFORMANCE OF WORK FOR LENOVO.ALL QUESTIONS MUST BE REFERRED TO THE LENOVO PURCHASING DEPARTMENT.

PART NO. 42W7622

TITLE MLB-1 SVT

AUDIO AD1981HD

LENOVO CONFIDENTIAL

42W7622

	DATE	EC NO.	PART NO.
	20061220	L11403	42W7622
			DEVELOPMENT NO.
			Q/M 40 / 97

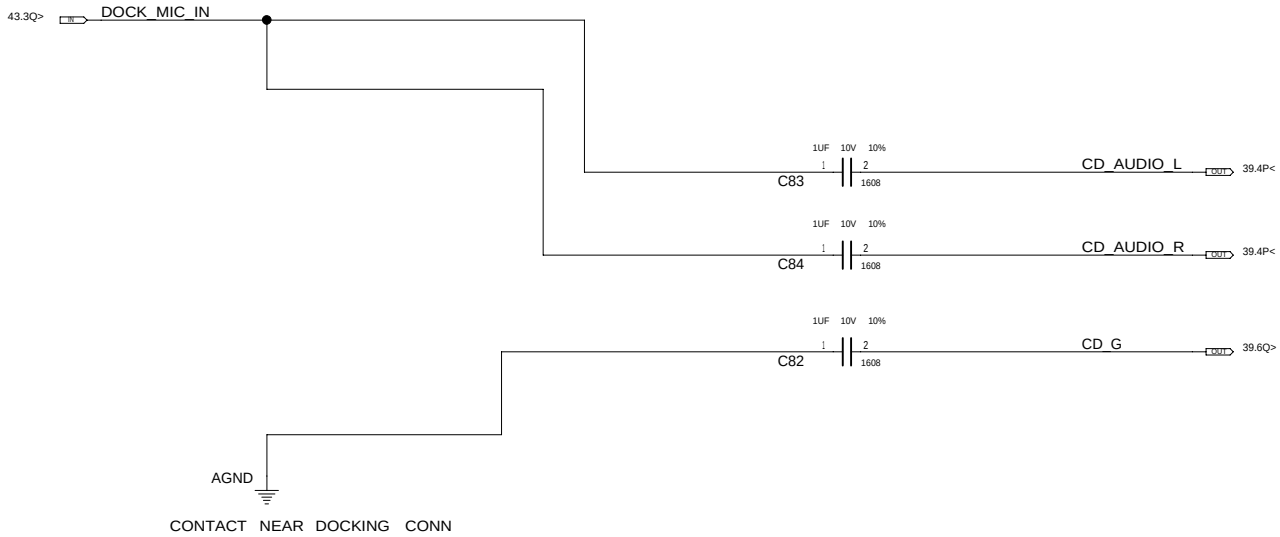

DESIGNER	K.Y	06/01/06	PART NO. 42W7622
CHECKED	Y.I	06/01/06	
APPROVED	T.S	06/01/06	TITLE MLB-1 SVT
CLASS	T.S	06/01/06	AUDIO MISC

THIS DOCUMENT IS THE PROPERTY OF LENOVO.ITS USE IS AUTHORIZED ONLY FOR RESPONDING TO A REQUEST FOR QUOTATION OR FOR THE PERFORMANCE OF WORK FOR LENOVO.ALL QUESTIONS MUST BE REFERRED TO THE LENOVO PURCHASING DEPARTMENT.

LENOVO CONFIDENTIAL

	DATE	EC NO.	PART NO.
	20061220	L11403	42W7622
			DEVELOPMENT NO. / Q/M: 41 / 97

LD3985G47(ST MICRO) IS ALTERNATIVES FOR VR5

VCC5MA

NO_ASM

VR5

LP3985IM5 -4.7

B_ON

98.3C<
45.0A< 88.5A<> 80.6N>
91.6B< 87.2B< 51.3A<

MICVCC

MICVCC2

R176 NO_ASM 0 5% 1/16W 1005

R186 0 5% 1/16W 1005

C81 NO_ASM 10% 10V 1608 1UF

C379 NO_ASM 10% 10V 1608 0.01UF

C105 NO_ASM 10% 10V 1608 1UF

C536 NO_ASM 20% 10V 2125 10UF

C538 NO_ASM 20% 10V 2125 10UF

C27 0.01UF 10% 25V 1005

GND AGND

MICVCC

R1555 47K 5% 1/16W 1005

R1557 47K 5% 1/16W 1005 NO_ASM

R1556 47K 5% 1/16W 1005

C1526 10% 10V 1UF 1005

AGND

MICVCC

U57

MAX4401

INT_MIC_DIRECT 39.6Q<

-MIC_MUTE 42.4G< 43.2M<

R1090 100K 5% 1/16W 1005

AGND

C588 390PF 50V 10% 1005

R340 27K 5% 1/16W 1005

MICVCC

R442 47K 5% 1/16W 1005

BVREF 43.9G<

R626 47K 5% 1/16W 1005

AGND

61.3P>

R326 6.8K 5% 1/16W 1005

C399 0.47UF 10% 10V 1608

AGND

MIC_DISABLE 2

Q90 DTC115EE

AGND

MICVCC

C1201 0.1UF 10% 10V 1005

C1202 10UF 10% 10V +80-20% 2125

AGND

MICVCC

R40 1K 5% 1/16W 1005

R38 100 5% 1/10W 2125

R96 100 5% 1/16W 1005 NO_ASM

39.4B> BVREF_PORT_C

R1558 0 5% 1/16W 1005

R1559 47 5% 1/16W 1005 NO_ASM

C1527 0.33UF 10% 10V 1608 NO_ASM

C139 1UF 10% 10V 1608

AGND

C144 10UF 10% 10V +80-20% 2125

R105 2.2K 1% 1/16W 1005

L12 NO_ASM MMZ1005Y152CT 1005

C1528 0.33UF 10% 10V 1608

J3 WM64PCT WM_62PC TERM 1 TERM 2

C147 1000PF 50V 10% 1005

AGND

C146 0.01UF 10% 25V 1005

GND AGND

ALL PARTS MUST BE PLACED NEAR TO INTERNAL MICROPHONE

DESIGNER	K.Y	06/01/06	PART NO. 42W7622
CHECKED	Y.I	06/01/06	
APPROVED	T.S	06/01/06	TITLE MLB-1 SVT
CLASS	T.S	06/01/06	AUDIO INT MIC

THIS DOCUMENT IS THE PROPERTY OF LENOVO.ITS USE IS AUTHORIZED ONLY FOR RESPONDING TO A REQUEST FOR QUOTATION OR FOR THE PERFORMANCE OF WORK FOR LENOVO.ALL QUESTIONS MUST BE REFERRED TO THE LENOVO PURCHASING DEPARTMENT.

LENOVO CONFIDENTIAL

	DATE	EC NO.	PART NO.
	20061220	L11403	42W7622
			DEVELOPMENT NO. / Q/M: 42 / 97

NEAR HEADPHONE CONN

WIDE PATTERN

WIDE AND SHORT PATTERN

45.5Q> HP_L_JACK

45.5Q> HP_R_JACK

FL3 MMZ1005Y152CT 1005

FL5 MMZ1005Y152CT 1005

FL4 MMZ1005Y152CT 1005

FL11 MMZ1005Y152CT 1005

FL204 BK1608HM102

R742 2.2K 1/16W 5% 1005

R743 2.2K 1/16W 5% 1005

C13 1000PF 10% 50V 1005

C197 1000PF 10% 50V 1005

C120 1000PF 10% 50V 1005

R1236 1608 1/10W 5% 1005

R744 10K 1/16W 5% 1005

R1019 10K 1/16W 5% 1005

R36 0 1/16W 5% 1005

+HP_JACK_IN OUT 61.4P<

-DOCK_HPOUT_DTCT IN 59.6J>

Q99 DTC115EE

R319 39.2K 1/16W 1% 1005

SENSE_A OUT 39.3P>

Q50 2SK3541

R257 22K 1/16W 5% 1005

NO_ASM

R1233 10K 1/16W 1% 1005

R428 20K 1/16W 1% 1005

-MIC_MUTE IN

R1234 22K 1/16W 5% 1005

Q207 2SK3541

R199 10K 1/16W 41.4H> 43.2M<

R295 22K 1/16W 5% 1005

Q55 2SK3541

J18 AUDIO_JACK

A3 MIC_JACK_5 OUT 43.4A<

A1 MIC_JACK_2 OUT 43.4A<

A2

A4

A5 MIC_JACK_3 OUT

A6

R872 0 1/16W 5% 1005

B3

B1

B2 NC

B4

B5

B6

D204 1SS400

D205 1SS400

D206 1SS400

D207 SD05C

D208 SD05C

D209 SD05C

43.4A<

0.01UF 10% 25V C162 1005

MICVCC

R50 100K 1/16W 5% 1005

R951 10K 1/16W 5% 1005

Q3 DTC115EE

DOCK_MIC_EN

R225 22K 1/16W 5% 1005

59.6J> -DOCK_MICIN_DTCT

C593 1000PF 10% 50V 1005

R290 20K 1/16W 1% 1005

SENSE_B OUT 39.3P>

Q30 2SK3541

VCC5MA

GND

AGND

DESIGNER	K.Y	06/01/06
CHECKED	Y.I	06/01/06
APPROVED	T.S	06/01/06
CLASS	T.S	06/01/06

THIS DOCUMENT IS THE PROPERTY OF LENOVO.ITS USE IS AUTHORIZED ONLY FOR RESPONDING TO A REQUEST FOR QUOTATION OR FOR THE PERFORMANCE OF WORK FOR LENOVO.ALL QUESTIONS MUST BE REFERRED TO THE LENOVO PURCHASING DEPARTMENT.

PART NO. 42W7622

TITLE MLB-1 SVT

AUDIO HP & EXT MIC JACK

LENOVO CONFIDENTIAL

42W7622

	DATE	EC NO.	PART NO.
	20061220	L11403	42W7622
			DEVELOPMENT NO. / Q/M: 43 / 97

NEED NEW CDB

41.3B> BVREF

39.4B> BVREF_PORT_B

R452 100 5% 1/16W 1005
R460 2.2K 5% 1/16W 1005
C73 1UF 10V 10% 1608
C438 1UF 10V 10% 1608
AGND

C244 1UF 10V 10% 1005
R463 47K 5% 1/16W 1005
C460 100PF 50V 5% 1005
AGND

MICVCC
U27 MAX4401
PLACE NEAR MAX4401 PWR AND GND PIN
EXT_MIC OUT 39.6Q<

C75 56PF 5% 50V 1005
R58 27K 5% 1/16W 1005
R479 6.8K 5% 1/16W 1005
C32 0.47UF 10V 10% 1608
AGND

MICVCC
C319 10UF 10V +80-20% 2125
C150 0.1UF 10V 10% 1005
AGND

FL14 BK1608HS102

42.2E> MIC_JACK_2 IN
42.2D> MIC_JACK_3 IN
42.3E> MIC_JACK_5 IN

FL9 MMZ1005Y152CT 1005
C151 0.33UF 10V 10% 1608
R151 47 5% 1/16W 1005
C63 4.7UF XSR 10V 10% 1608
R57 47K 5% 1/16W 1005
AGND

FL10 BK1608HS102
C625 1000PF 10% 50V 1005
C142 100PF 5% 50V 1005
C149 1000PF 10% 50V 1005
R170 470K 5% 1/16W 1005
AGND GND

NEAR EXT MIC CONN

MICVCC
U11 MAX4401
PLACE NEAR MAX4401 PWR AND GND PIN
C283 0.47UF 10V 10% 1608
R49 8.2K 5% 1/16W 1005
DOCK_MIC_IN OUT 40.7C<
AGND

C469 100PF 5% 50V 1005
R473 16K 5% 1/16W 1005
42.4G< 41.4H< -MIC_MUTE IN

R90 0 1/16W 5% 1005
GND AGND

C91 0.01UF 10% 25V 1005
GND AGND

59.5Q> DOCK_MIC_IN_L IN
R22 36K 5% 1/16W 1005
R35 10K 5% 1/16W 1005
AGND

MICVCC
C1103 1UF 10V 10% 1608
C1104 0.1UF 10V 10% 1005
AGND

DESIGNER	K.Y	06/01/06	PART NO. 42W7622
CHECKED	Y.I	06/01/06	
APPROVED	T.S	06/01/06	TITLE MLB-1 SVT
CLASS	T.S	06/01/06	AUDIO EXT MIC AMP

THIS DOCUMENT IS THE PROPERTY OF LENOVO.ITS USE IS AUTHORIZED ONLY FOR RESPONDING TO A REQUEST FOR QUOTATION OR FOR THE PERFORMANCE OF WORK FOR LENOVO.ALL QUESTIONS MUST BE REFERRED TO THE LENOVO PURCHASING DEPARTMENT.

LENOVO CONFIDENTIAL

	DATE	EC NO.	PART NO.
	20061220	L11403	42W7622
			DEVELOPMENT NO.
			Q/M 44 / 97

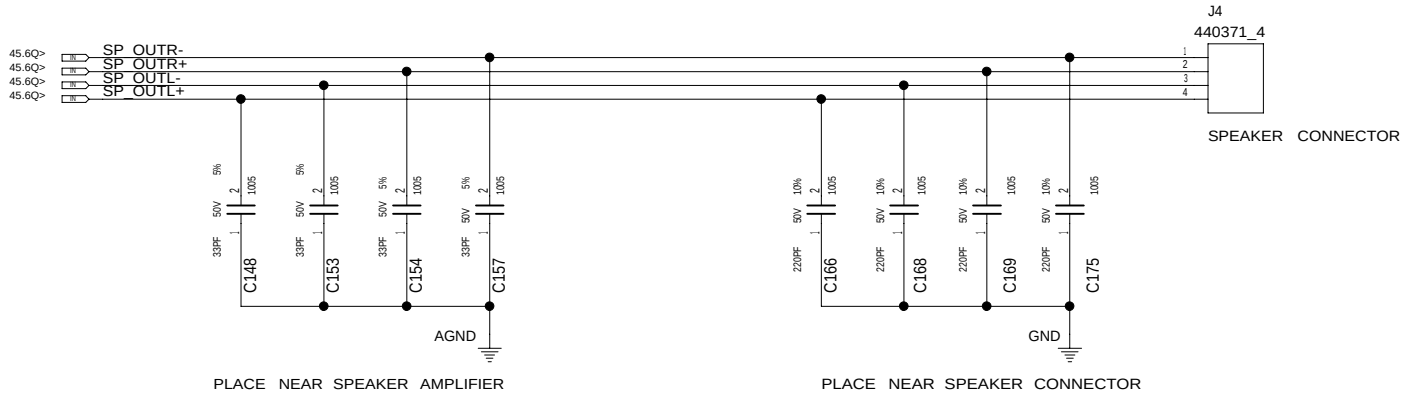

DESIGNER	K.Y	06/01/06	PART NO. 42W7622
CHECKED	Y.I	06/01/06	
APPROVED	T.S	06/01/06	TITLE MLB-1 SVT
CLASS	T.S	06/01/06	AUDIO SPEAKER

THIS DOCUMENT IS THE PROPERTY OF LENOVO.ITS USE IS AUTHORIZED ONLY FOR RESPONDING TO A REQUEST FOR QUOTATION OR FOR THE PERFORMANCE OF WORK FOR LENOVO.ALL QUESTIONS MUST BE REFERRED TO THE LENOVO PURCHASING DEPARTMENT.

LENOVO CONFIDENTIAL

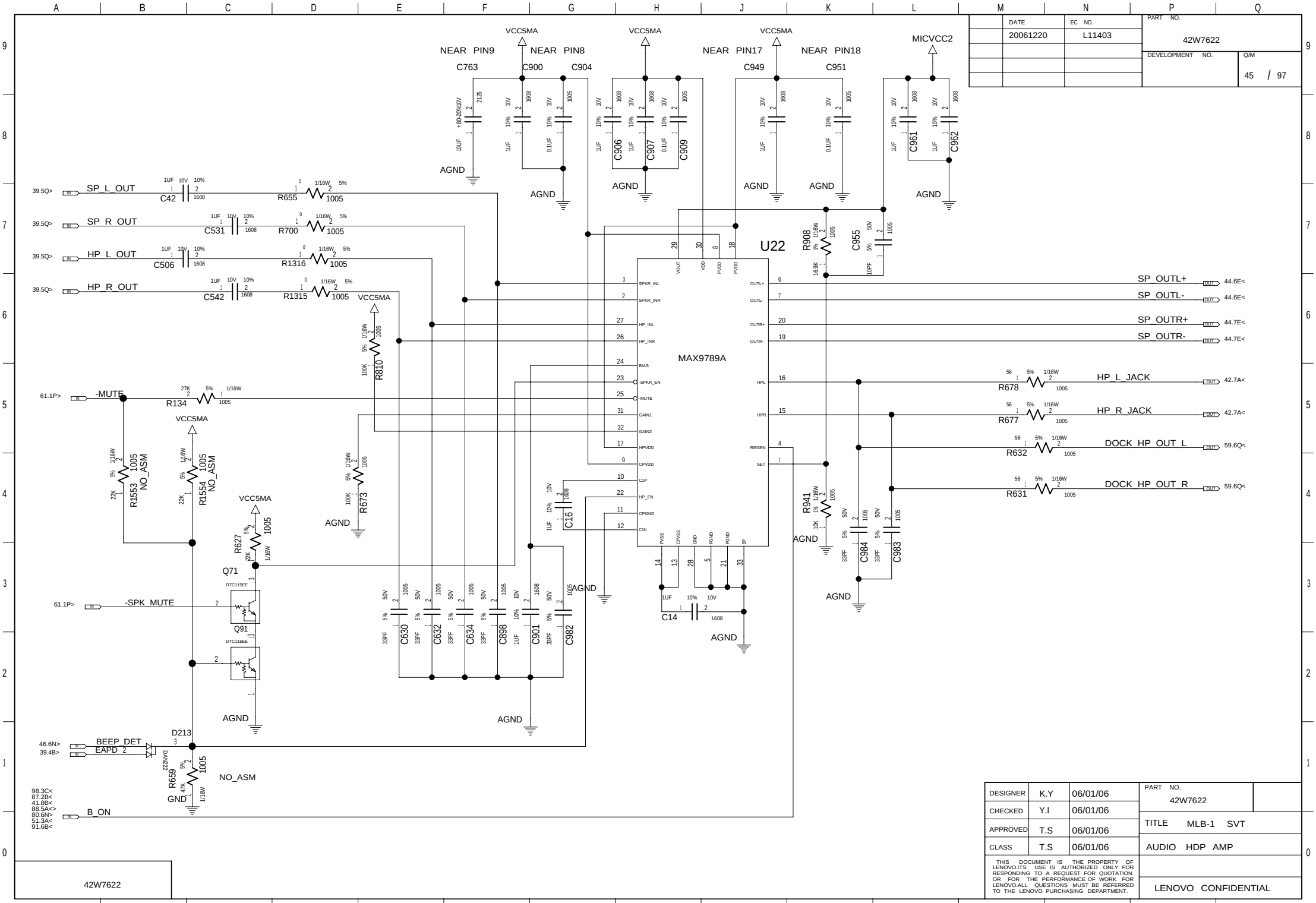

	DATE	EC NO.	PART NO.
	20061220	L11403	42W7622
			DEVELOPMENT NO. / Q/M: 45 / 97

			PART NO. 42W7622
DESIGNER	K.Y	06/01/06	
CHECKED	Y.I	06/01/06	
APPROVED	T.S	06/01/06	TITLE MLB-1 SVT
CLASS	T.S	06/01/06	AUDIO HDP AMP

THIS DOCUMENT IS THE PROPERTY OF LENOVO.ITS USE IS AUTHORIZED ONLY FOR RESPONDING TO A REQUEST FOR QUOTATION OR FOR THE PERFORMANCE OF WORK FOR LENOVO.ALL QUESTIONS MUST BE REFERRED TO THE LENOVO PURCHASING DEPARTMENT.

LENOVO CONFIDENTIAL

42W7622

	DATE	EC NO.	PART NO.
	20061220	L11403	42W7622
			DEVELOPMENT NO. / Q/M: 46 / 97

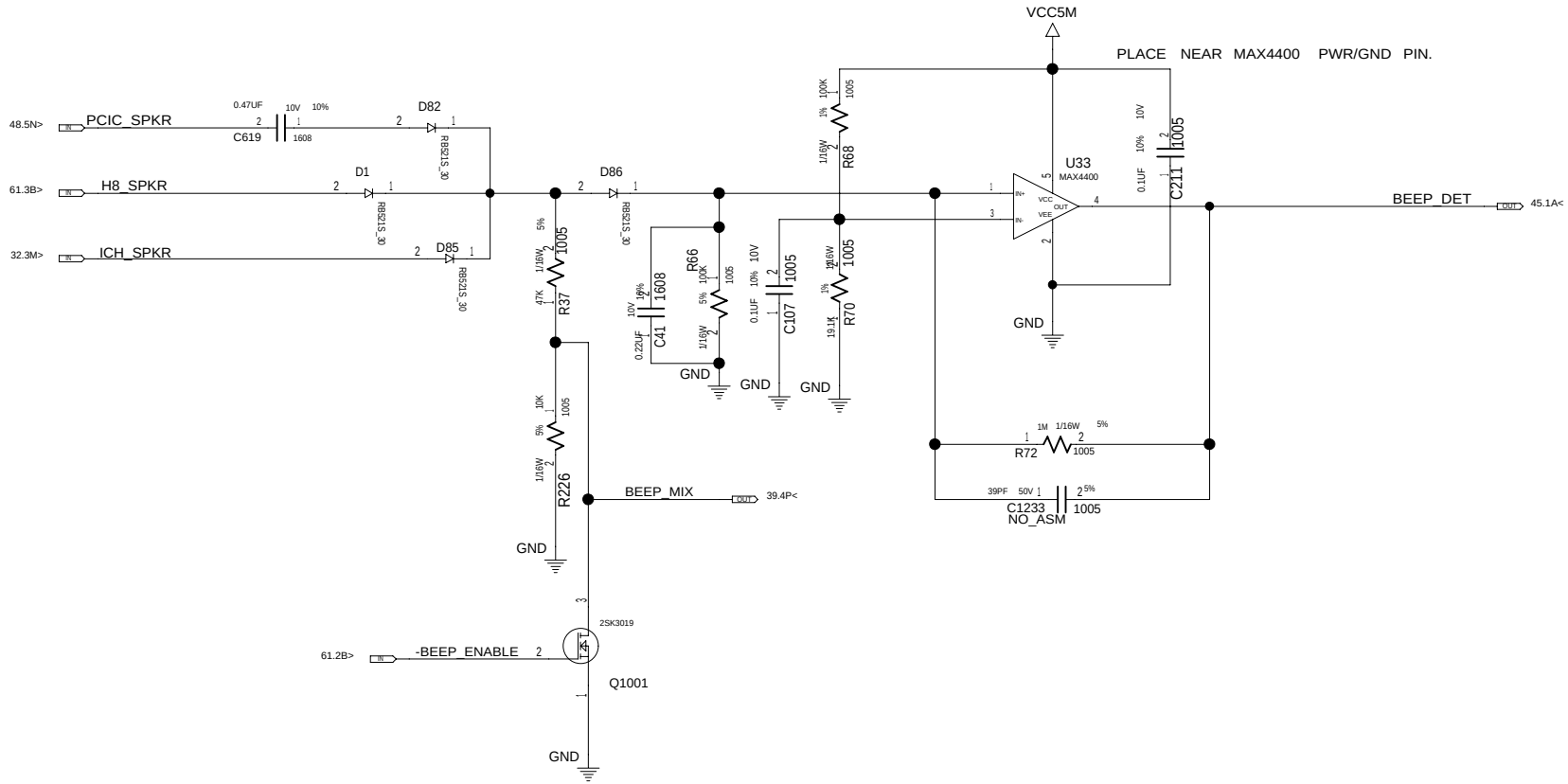

DESIGNER	K.Y	06/01/06	PART NO. 42W7622
CHECKED	Y.I	06/01/06	
APPROVED	T.S	06/01/06	TITLE MLB-1 SVT
CLASS	T.S	06/01/06	AUDIO HDP AMP MISC

THIS DOCUMENT IS THE PROPERTY OF LENOVO.ITS USE IS AUTHORIZED ONLY FOR RESPONDING TO A REQUEST FOR QUOTATION OR FOR THE PERFORMANCE OF WORK FOR LENOVO.ALL QUESTIONS MUST BE REFERRED TO THE LENOVO PURCHASING DEPARTMENT.

LENOVO CONFIDENTIAL

	DATE	EC NO.	PART NO. 42W7622
	20061220	L11403	DEVELOPMENT NO. / Q/M 47 / 97

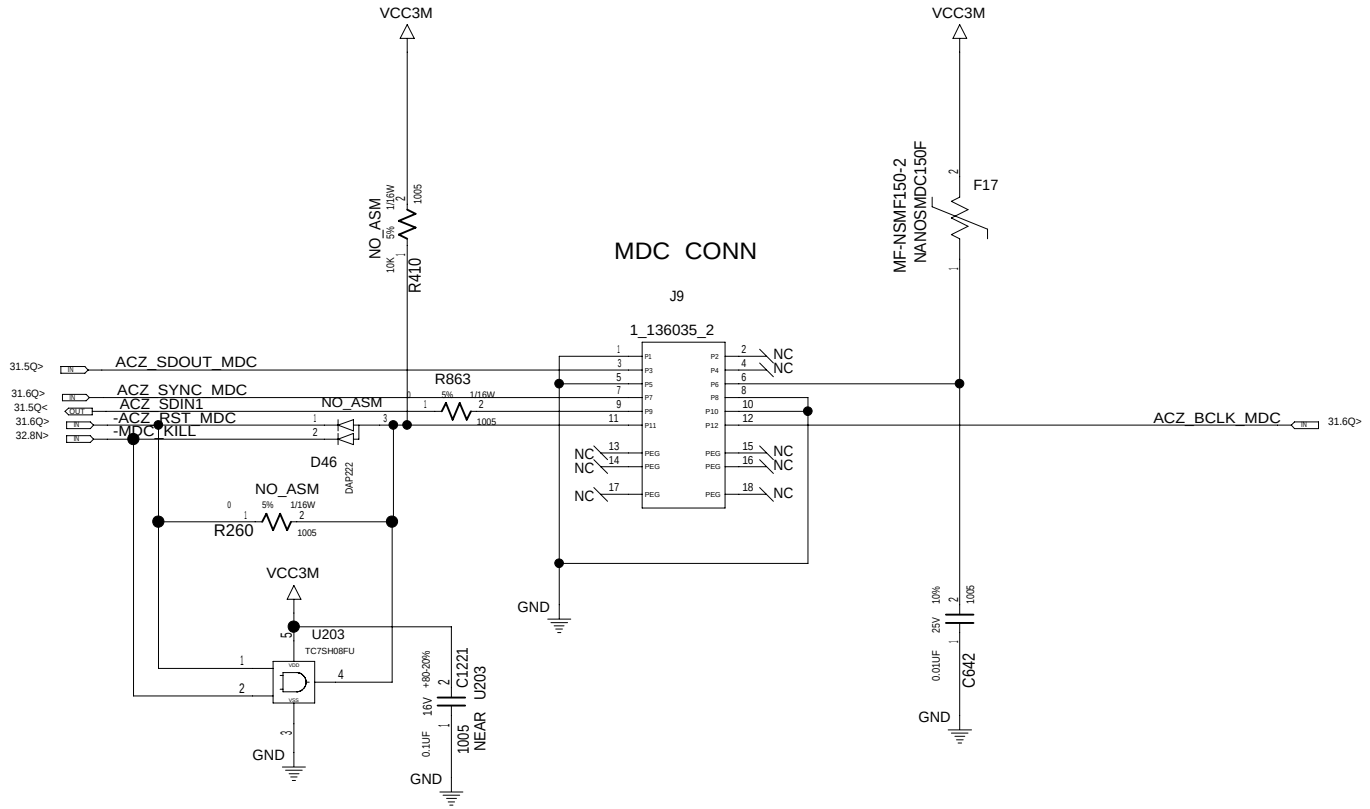

			PART NO. 42W7622	
DESIGNER	K.Y	06/01/06		
CHECKED	Y.I	06/01/06	TITLE MLB-1 SVT	
APPROVED	T.S	06/01/06	MDC 1.5 CONNECTOR	
CLASS	T.S	06/01/06		

THIS DOCUMENT IS THE PROPERTY OF LENOVO.ITS USE IS AUTHORIZED ONLY FOR RESPONDING TO A REQUEST FOR QUOTATION OR FOR THE PERFORMANCE OF WORK FOR LENOVO.ALL QUESTIONS MUST BE REFERRED TO THE LENOVO PURCHASING DEPARTMENT.

LENOVO CONFIDENTIAL

	DATE	EC NO.	PART NO.
	20061220	L11403	42W7622
			DEVELOPMENT NO.
			Q/M 48 / 97

TABLE 1394

1394	NO	YES
U20	R5C804	R5C847/R5C803
FL6	0 OHM	MPZ1608S600A
R931	NO_ASM	ASM
C256	NO_ASM	ASM
R988	NO_ASM	ASM
R989	NO_ASM	ASM
R998	NO_ASM	ASM
R999	NO_ASM	ASM
C877	NO_ASM	ASM
R997	NO_ASM	ASM
C891	NO_ASM	ASM
C894	NO_ASM	ASM
J28	NO_ASM	ASM
R985	NO_ASM	ASM
Y7	NO_ASM	ASM
C858	NO_ASM	ASM
C871	NO_ASM	ASM
R826	NO_ASM	ASM

SDV		
J28	ASM	NO_ASM
R826	ASM	NO_ASM

TRACE LENGTH MATCHING
REQUIRED FOR A PAIR AND B PAIR

DESIGNER	K.Y	06/01/06
CHECKED	Y.I	06/01/06
APPROVED	T.S	06/01/06
CLASS	T.S	06/01/06

PART NO. 42W7622

TITLE MLB-1 SVT

CARD BUS CONTROLLER(1/2)

THIS DOCUMENT IS THE PROPERTY OF LENOVO.ITS USE IS AUTHORIZED ONLY FOR RESPONDING TO A REQUEST FOR QUOTATION OR FOR THE PERFORMANCE OF WORK FOR LENOVO.ALL QUESTIONS MUST BE REFERRED TO THE LENOVO PURCHASING DEPARTMENT.

LENOVO CONFIDENTIAL

42W7622

	DATE	EC NO.	PART NO.
	20061220	L11403	42W7622
			DEVELOPMENT NO. / Q/M
			49 / 95

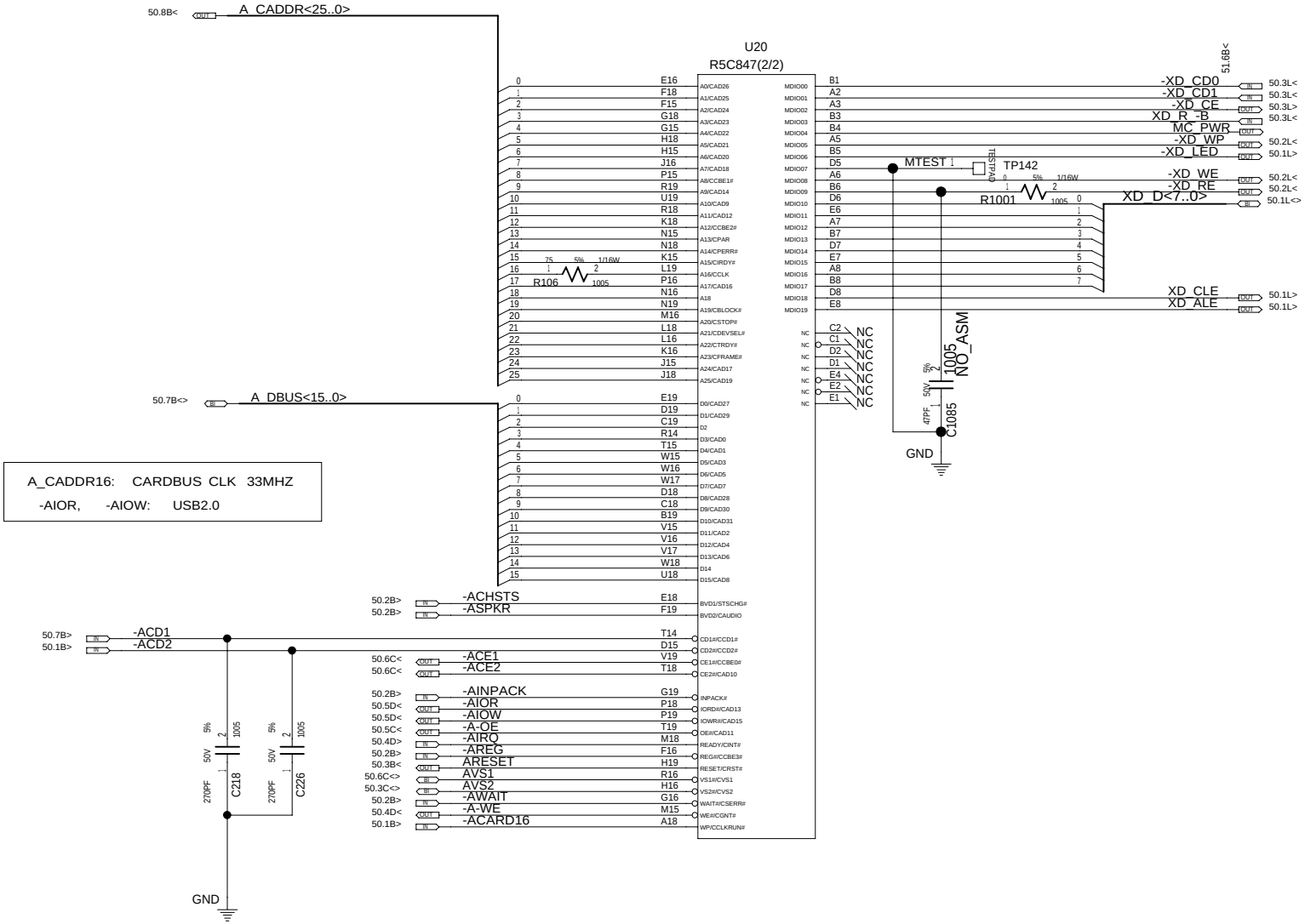

DESIGNER	K.Y	06/01/06	PART NO. 42W7622
CHECKED	Y.I	06/01/06	
APPROVED	T.S	06/01/06	TITLE MLB-1 SVT
CLASS	T.S	06/01/06	CARD BUS CONTROLLER(2/2)

THIS DOCUMENT IS THE PROPERTY OF LENOVO.ITS USE IS AUTHORIZED ONLY FOR RESPONDING TO A REQUEST FOR QUOTATION OR FOR THE PERFORMANCE OF WORK FOR LENOVO.ALL QUESTIONS MUST BE REFERRED TO THE LENOVO PURCHASING DEPARTMENT.

LENOVO CONFIDENTIAL

42W7622

	DATE	EC NO.	PART NO.
	20061220	L11403	42W7622
			DEVELOPMENT NO. / Q/M
			50 / 97

J6
6123215-1
CONN CARD EDGE 150P P=0.6MM
I125
6123215

A_VPP5 A_VCC5 VCC1R5_EXC VCC3_EXC VCC3AUX_EXC VCC5B VCC3_MC VCC3AUX_EXC VCC3M

49.8C> A_CADDR<25..0>
49.5C<> A_DBUS<15..0>
49.3B< -ACD1
49.3E> -ACE1
49.3E> -ACE2
49.2E<> AVS1
49.2E> -A-OE
49.3E> -AIOR
49.3E> -AIOW
49.2E< -A-WE
-AIRQ
A_VCC5
49.2E> AVS2
49.2E> ARESET
49.2E< -AWAIT
49.3E< -AINPACK
49.2E< -AREG
49.3E< -ASPKR
49.3E< -ACHSTS
49.3B< -ACD2
49.2E< -ACARD16

USBP3- 32.7N<>
USBP3+ 32.7N<>
-CPUSB 51.3D<
-PCIE_WAKE 64.5A< 32.0J< 57.5L< 57.1L< 59.5A<
-PERST 51.3P<
-CPPE 51.3D<
-PCIE_CLK_EXC 19.2L>
PCIE_CLK_EXC 19.2L>
-CLKREQ_EXC 19.2N>
PCIE_EXC_RXN 33.5D<
PCIE_EXC_RXP 33.5D<
EXC_PWRG 51.3P>
PCIE_EXC_TXN 33.5N>
PCIE_EXC_TXP 33.5N>
-XD_CD0 49.7M<
-XD_CD1 49.7M<
-XD_CE 49.7M>
XD_R_-B 49.7M<
-XD_WP 49.7M>
-XD_RE 49.7M>
-XD_WE 49.7M>
XD_D<7..0> 49.7M<>
XD_CLE 49.6M>
XD_ALE 49.6M>
-XD_LED 49.7M>
CB_ID0 32.1A<
CB_ID1 32.1A<
CB_ID2 32.2A<

R724 R727 R729 R730 R737 NO_ASM R109 R1208 D101 DAN222 Q74 2SK3541

PLACE NEAR PCMCIA SOCKET
C1101 C1102 C1203 C276 C277 C1204 C431 C800 C264 C265

GND

DESIGNER	K.Y	06/01/06
CHECKED	Y.I	06/01/06
APPROVED	T.S	06/01/06
CLASS	T.S	06/01/06

THIS DOCUMENT IS THE PROPERTY OF LENOVO.ITS USE IS AUTHORIZED ONLY FOR RESPONDING TO A REQUEST FOR QUOTATION OR FOR THE PERFORMANCE OF WORK FOR LENOVO.ALL QUESTIONS MUST BE REFERRED TO THE LENOVO PURCHASING DEPARTMENT.

PART NO. 42W7622
TITLE MLB-1 SVT
CARD BUS SLOT
LENOVO CONFIDENTIAL

42W7622

	DATE	EC NO.	PART NO.
	20061220	L11403	42W7622
			DEVELOPMENT NO. / Q/M: 51 / 97

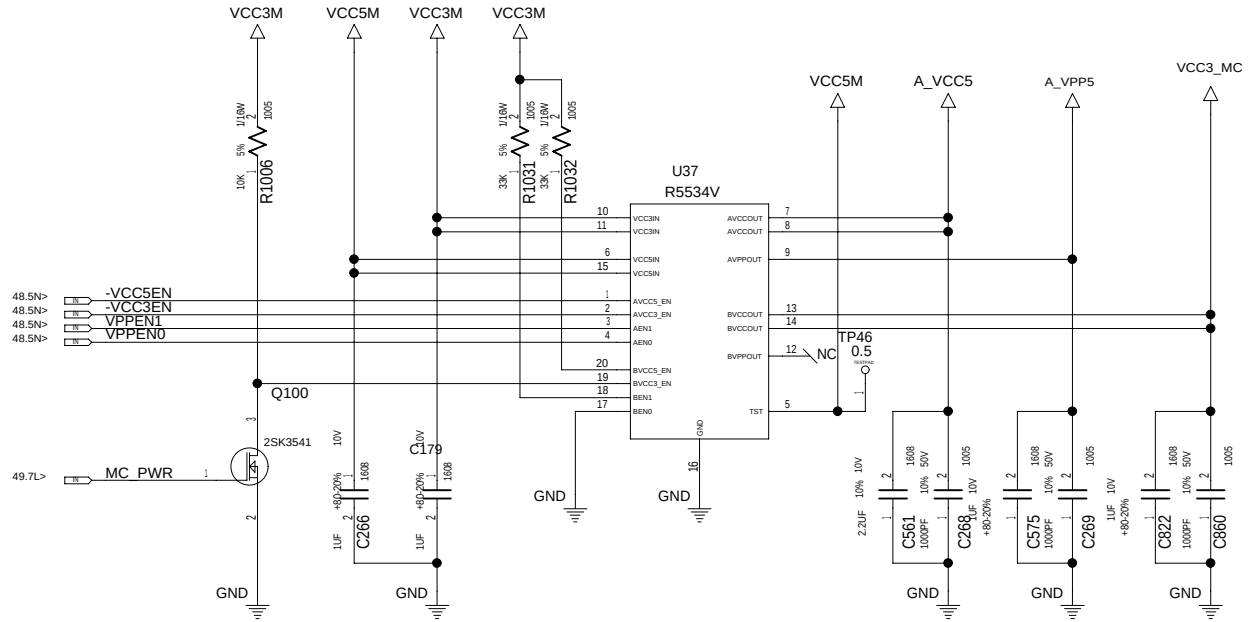

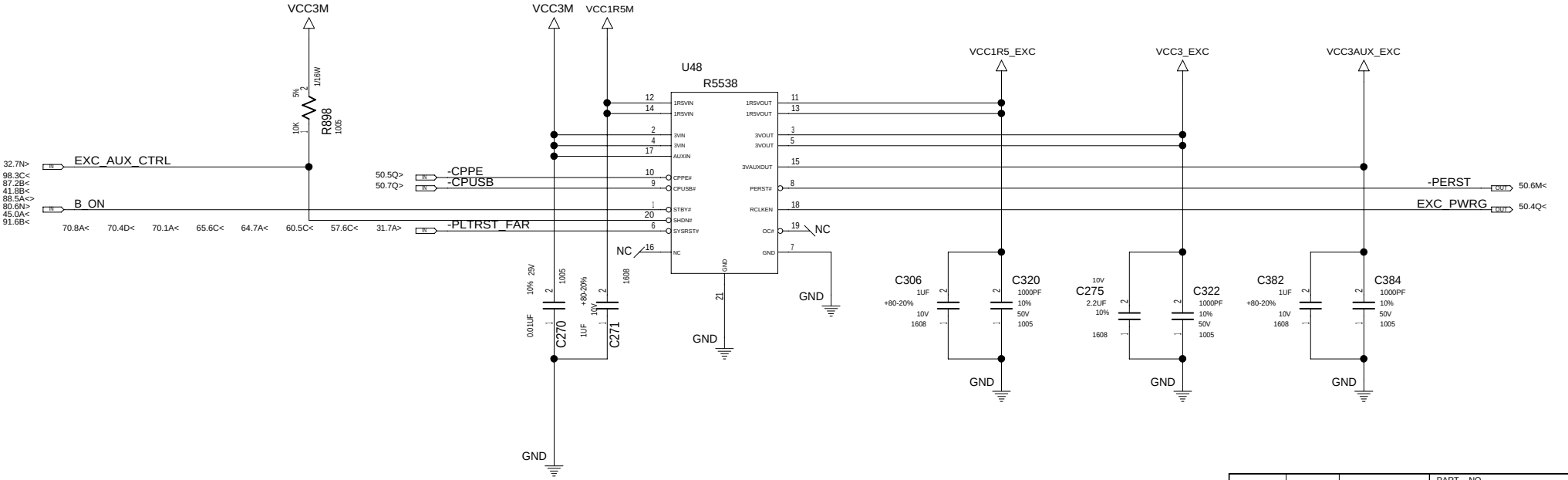

DESIGNER	K.Y	06/01/06	PART NO. 42W7622
CHECKED	Y.I	06/01/06	TITLE MLB-1 SVT
APPROVED	T.S	06/01/06	CARD BUS POWER CONTROL
CLASS	T.S	06/01/06	

THIS DOCUMENT IS THE PROPERTY OF LENOVO.ITS USE IS AUTHORIZED ONLY FOR RESPONDING TO A REQUEST FOR QUOTATION OR FOR THE PERFORMANCE OF WORK FOR LENOVO.ALL QUESTIONS MUST BE REFERRED TO THE LENOVO PURCHASING DEPARTMENT.

LENOVO CONFIDENTIAL

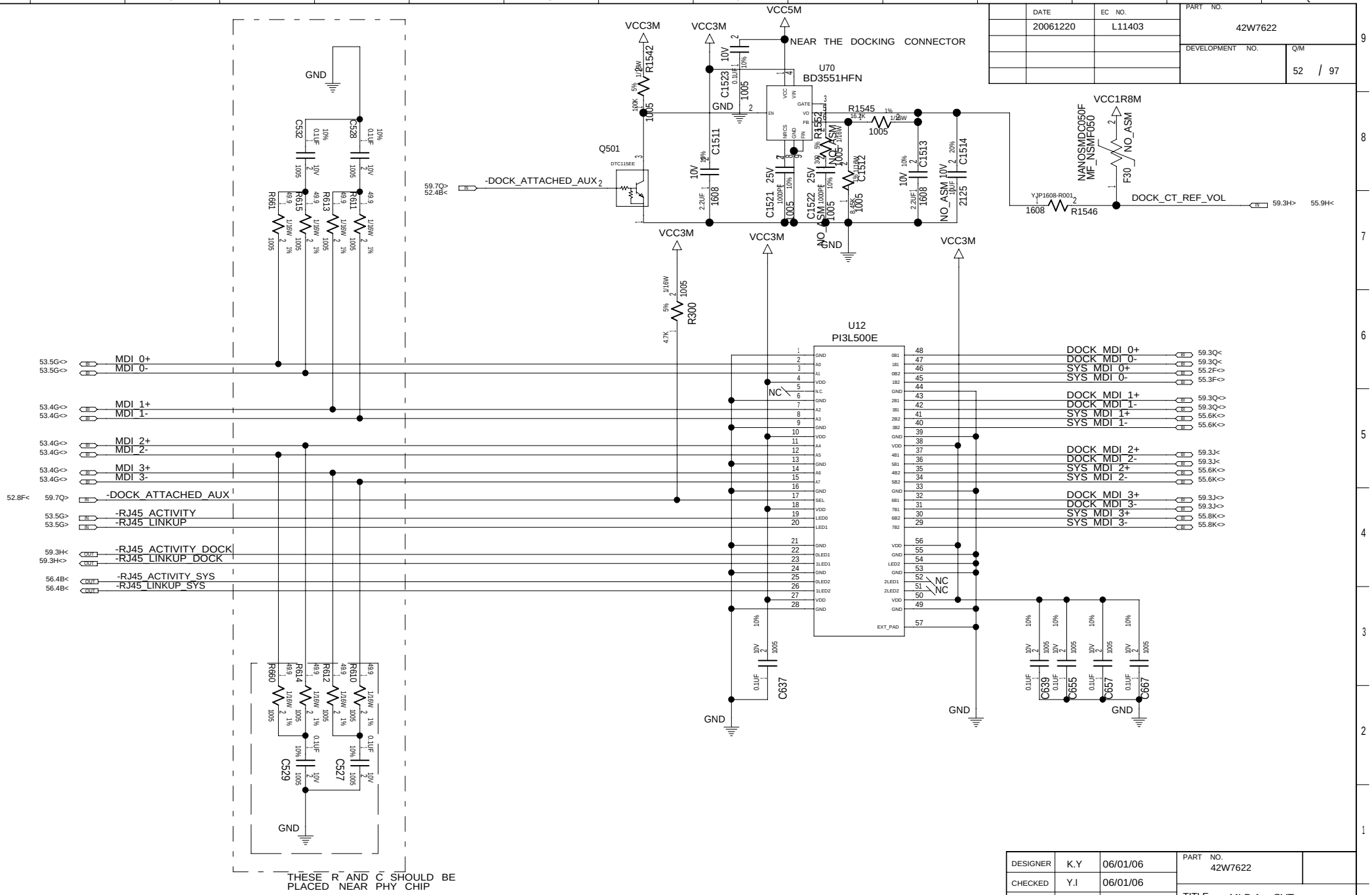

	DATE	EC NO.
	20061220	L11403

PART NO. 42W7622

DEVELOPMENT NO.

Q/M 52 / 97

DESIGNER	K.Y	06/01/06
CHECKED	Y.I	06/01/06
APPROVED	T.S	06/01/06
CLASS	T.S	06/01/06

PART NO. 42W7622

TITLE MLB-1 SVT

GBE LAN SW

THIS DOCUMENT IS THE PROPERTY OF LENOVO.ITS USE IS AUTHORIZED ONLY FOR RESPONDING TO A REQUEST FOR QUOTATION OR FOR THE PERFORMANCE OF WORK FOR LENOVO.ALL QUESTIONS MUST BE REFERRED TO THE LENOVO PURCHASING DEPARTMENT.

LENOVO CONFIDENTIAL

	DATE	EC NO.	PART NO. 42W7622
	20061220	L11403	DEVELOPMENT NO. / Q/M 53 / 97

EPSON SG-310SCF

VCC3M_OR

TXC 7X25000027

NO_ASM RIVER OSC

FCXO_05 Y5

VDD OUTPUT STANDBY GND

R102 0 5% 1/16W 1005

R663 0 5% 1/16W 1005

NO_ASM C1087 10PF 5% 50V 1005

NO_ASM R1054 0 5% 1/16W 1005

NO_ASM C78 0.1UF 10% 10V 1005

LAN_XTAL2 LAN_XTAL1

Y2 25MHZ XXXXXXXXXX

KSD DSX630G OR TXC 7A

C862 33PF 5% 50V 1005

C586 33PF 5% 50V 1005

GND

NOTE:PLACE OSCILLATOR LESS THAN 0.75INCHES FROM LAN CONTROLLER

NOTE: PLACE CRYSTAL LESS THAN 0.75INCHES FROM GBE PHY

NOTE: PLACE GLAN_CLK SERIES RESISTOR CLOSE TO LAN CONTROLLER

NOTE: PLACE C998 C999 CLOSE TO LAN CONTROLLER

NOTE: PLACE RESISTOR RCOMP LESS THAN 1" FROM LAN CONTROLLER

NOTE: KEEP THIS RESISTOR ON THE TOP SIDE

NOTE: CONNECT RESISTOR TO GND NEAR BALL E6

NINEVEH U10

31.4P<	GLAN_CLK	R5 33 5% 1/16W 1005	E2 JKCLK-JCLK
31.4L>	LAN_RSTSYNC		E3 JRSTSYNC
31.5M>	LAN_TXD0		D1 JTXD0
31.5M>	LAN_TXD1		F3 JTXD1
31.4M>	LAN_TXD2		F1 JTXD2
31.4M<	LAN_RXD0		D3 JRXD0
31.4M<	LAN_RXD1		D2 JRXD1
31.4M<	LAN_RXD2		C1 JRXD2
33.5D<	GLAN_RXP	C998 10V 10% 0.1UF	H2 GLAN_TXP-NC
33.5D<	GLAN_RXN	C999 10V 10% 0.1UF	J2 GLAN_TXN-NC
33.5N>	GLAN_TXP		J4 GLAN_RXP-NC
33.5N>	GLAN_TXN		H4 GLAN_RXN-NC
	LAN_KMRN_RCOMP_P	R692 1.4K 1% 1/16W 1005	G7 KBIAS_P-RBIAS100
	LAN_KMRN_RCOMP_N		H7 KBIAS_N-RBIAS10
52.4B<	-RJ45_LINKUP		A4 LED0-LINK_UP_N
52.4B<	-RJ45_ACTIVITY		B4 LED1-ACT_LED_N
	NC		A5 LED2-SPEED_LED_N
52.6B<>	MDI_0+		B8 MDI_PLUS[0]-TDP
52.6B<>	MDI_0-		B9 MDI_MINUS[0]-TDN
52.5B<>	MDI_1+		D9 MDI_PLUS[1]-RDP
52.5B<>	MDI_1-		D8 MDI_MINUS[1]-RDN
52.5B<>	MDI_2+		F9 MDI_PLUS[2]-NC
52.5B<>	MDI_2-		F8 MDI_MINUS[2]-NC
52.5B<>	MDI_3+		H8 MDI_PLUS[3]-NC
52.5B<>	MDI_3-		H9 MDI_MINUS[3]-NC
		R669 0 5% 1/16W 1005 NO_ASM	A7 IEEE_TEST_P-NC
			B7 IEEE_TEST_N-NC
	NC		J6 RSVD_J6-NC
	NC		J7 RSVD_J7-NC
	LAN_RBIAS_P	R704 1.4K 1% 1/16W 1005 GND	E7 RBIAS_P-NC
			E6 RBIAS_N-NC
	NC		B5 RSVD_B5-NC
	NC		A6 RSVD_A6-ADV10/LAN_DIS_N
	NC		C5 RSVD_C5-NC
			B6 TEST_EN

LCI / GLCI / MDI / JTAG

LAN_JTAG_TMS-ISOL_EXEC

LAN_JTAG_TDO-TOUT

LAN_JTAG_TDI-ISOL_TI

LAN_JTAG_TCK-ISOL_TCK

R712 100 1% 1/16W 1005 GND

VCC1R8AUX

C571 10UF 10V +80-20% 2125

C1007 0.1UF 10% 10V 1005

C1008 470PF 10% 50V 1005

C574 470PF 10% 50V 1005

C1006 470PF 10% 50V 1005

GND

NOTE: PLACE CLOSE TO LAN CONTROLLER

VCC1R05M

C454 10UF 10V +80-20% 2125

C796 0.1UF 10% 10V 1005

C1012 470PF 10% 50V 1005

C795 470PF 10% 50V 1005

C1011 470PF 10% 50V 1005

GND

NOTE: PLACE CLOSE TO LAN CONTROLLER

VCC1R05AUX

VCC3M

VCC1R8AUX

R1515 0 5% 1/10W 1608

C1004 0.1UF 10% 10V 1005

C594 4.7UF 10% 10V 1608

GND

			PART NO. 42W7622
DESIGNER	K.Y	06/01/06	
CHECKED	Y.I	06/01/06	TITLE MLB-1 SVT
APPROVED	T.S	06/01/06	GBE VIDALIA(1/2)
CLASS	T.S	06/01/06	

THIS DOCUMENT IS THE PROPERTY OF LENOVO.ITS USE IS AUTHORIZED ONLY FOR RESPONDING TO A REQUEST FOR QUOTATION OR FOR THE PERFORMANCE OF WORK FOR LENOVO.ALL QUESTIONS MUST BE REFERRED TO THE LENOVO PURCHASING DEPARTMENT.

LENOVO CONFIDENTIAL

42W7622

	DATE	EC NO.
	20061220	L11403

PART NO. 42W7622

DEVELOPMENT NO.

Q/M 54 / 97

BLANK PAGE

DESIGNER	K.Y	06/01/06
CHECKED	Y.I	06/01/06
APPROVED	T.S	06/01/06
CLASS	T.S	06/01/06

THIS DOCUMENT IS THE PROPERTY OF LENOVO.ITS USE IS AUTHORIZED ONLY FOR RESPONDING TO A REQUEST FOR QUOTATION OR FOR THE PERFORMANCE OF WORK FOR LENOVO.ALL QUESTIONS MUST BE REFERRED TO THE LENOVO PURCHASING DEPARTMENT.

PART NO. 42W7622

TITLE MLB-1 SVT

BLANK PAGE

LENOVO CONFIDENTIAL

42W7622

	DATE	EC NO.	PART NO. 42W7622
	20061220	L11403	DEVELOPMENT NO. / Q/M 55 / 97

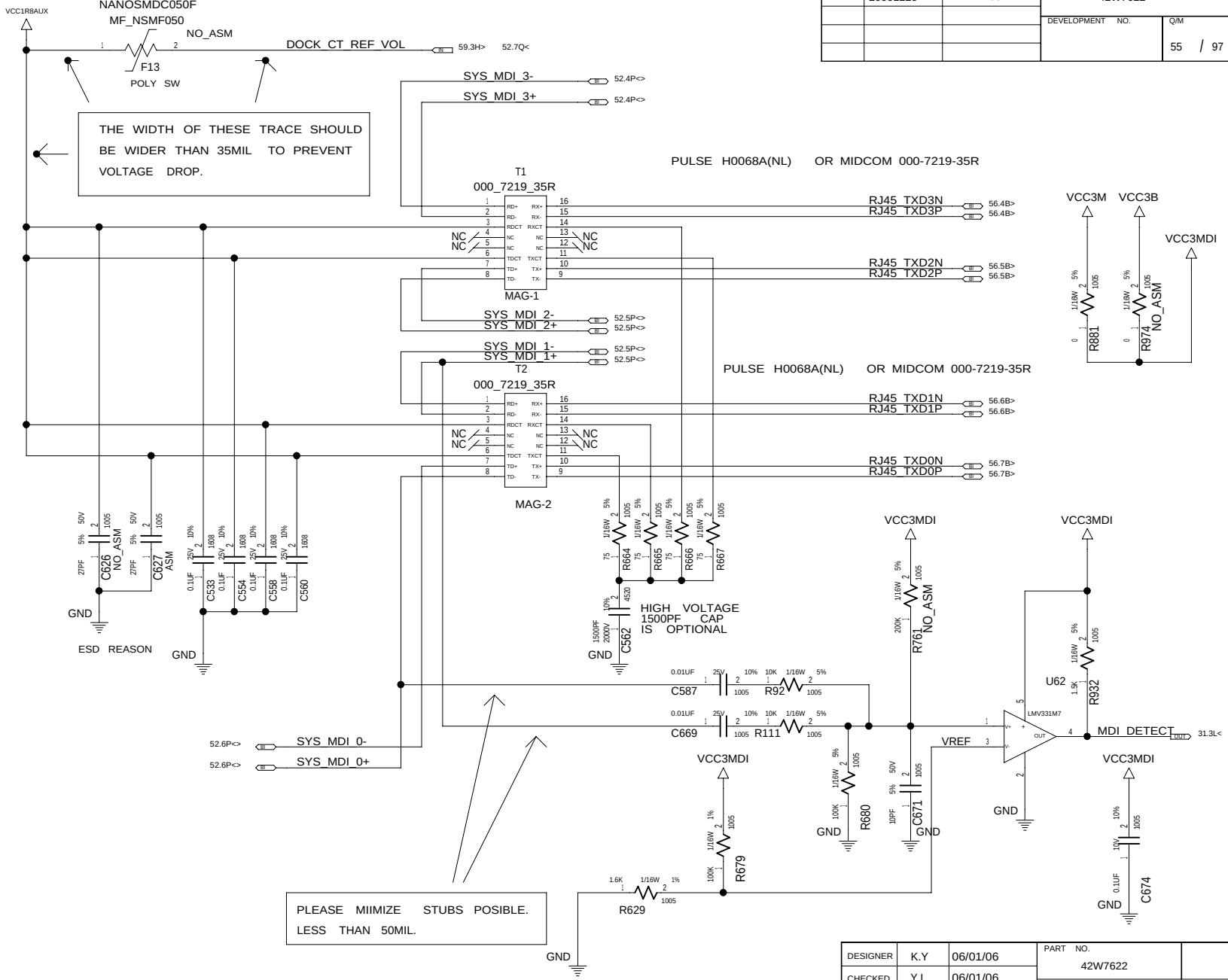

DESIGNER	K.Y	06/01/06
CHECKED	Y.I	06/01/06
APPROVED	T.S	06/01/06
CLASS	T.S	06/01/06

THIS DOCUMENT IS THE PROPERTY OF LENOVO.ITS USE IS AUTHORIZED ONLY FOR RESPONDING TO A REQUEST FOR QUOTATION OR FOR THE PERFORMANCE OF WORK FOR LENOVO.ALL QUESTIONS MUST BE REFERRED TO THE LENOVO PURCHASING DEPARTMENT.

PART NO. 42W7622

TITLE MLB-1 SVT

GBE MAGNETICS

LENOVO CONFIDENTIAL

42W7622

	DATE	EC NO.	PART NO. 42W7622
	20061220	L11403	DEVELOPMENT NO. / Q/M 56 / 97

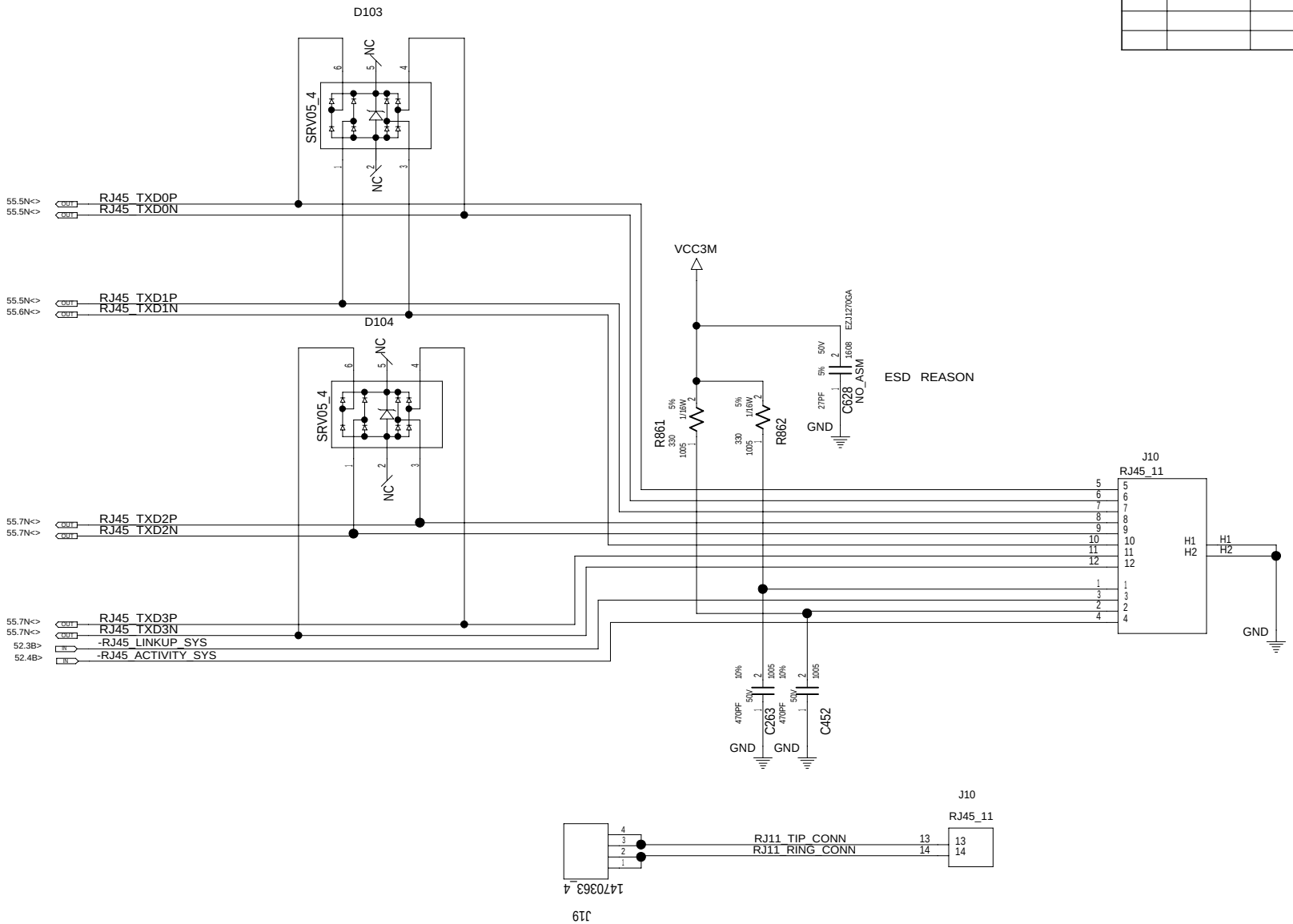

DESIGNER	K.Y	06/01/06	PART NO. 42W7622
CHECKED	Y.I	06/01/06	
APPROVED	T.S	06/01/06	TITLE MLB-1 SVT
CLASS	T.S	06/01/06	RJ11/RJ45 CONNECTOR

THIS DOCUMENT IS THE PROPERTY OF LENOVO.ITS USE IS AUTHORIZED ONLY FOR RESPONDING TO A REQUEST FOR QUOTATION OR FOR THE PERFORMANCE OF WORK FOR LENOVO.ALL QUESTIONS MUST BE REFERRED TO THE LENOVO PURCHASING DEPARTMENT.

LENOVO CONFIDENTIAL

MINI PCIE CONN-1 FOR WWAN

	DATE	EC NO.	PART NO.
	20061220	L11403	42W7622
			DEVELOPMENT NO.
			Q/M 57 / 97

VCC3WAN
VCC1R5B
J22
P04_FJ00504_170
1827004_8
J25
GND
-LED_WWAN
USBP2+
USBP2-
-PLTRST_FAR
-WWAN_DISABLE
PCIE_WWAN_TXP
PCIE_WWAN_TXN
PCIE_WWAN_RXP
PCIE_WWAN_RXN
PCIE_CLK_WWAN
-PCIE_CLK_WWAN
-CLKREQ_BAY_DEVICE
-PCIE_WAKE
D52
RCLAMP0502B
NO_ASM
R1255
C1116 C1117 C1504
C1119 C1118 C1503 C1005 C2125
VCC3B
NEAR J22 CONN

	W/WWAM	W/O WWAN
J22	ASM	NO_ASM
J25	ASM	NO_ASM

LOGIC

MINI PCIE CONN-2 FOR WLAN

VCC3AMT
VCC3M
VCC3B
VCC1R5B
J32
P04_FJ00504_170
-LED_WLAN
-PLTRST_NEAR
-WLAN_RF_KILL
R1257
R1256
NO_ASM
-CL_RST_WLAN
CL_DATA_WLAN
CL_CLK_WLAN
PCIE_WLAN_TXP
PCIE_WLAN_TXN
PCIE_WLAN_RXP
PCIE_WLAN_RXN
PCIE_CLK_WLAN
-PCIE_CLK_WLAN
-CLKREQ_WLAN
WIFI_BUSY
BT_BUSY
-PCIE_WAKE
C1505 C1506 C1608

DESIGNER	K.Y	06/01/06
CHECKED	Y.I	06/01/06
APPROVED	T.S	06/01/06
CLASS	T.S	06/01/06

THIS DOCUMENT IS THE PROPERTY OF LENOVO.ITS USE IS AUTHORIZED ONLY FOR RESPONDING TO A REQUEST FOR QUOTATION OR FOR THE PERFORMANCE OF WORK FOR LENOVO.ALL QUESTIONS MUST BE REFERRED TO THE LENOVO PURCHASING DEPARTMENT.

PART NO. 42W7622

TITLE MLB-1 SVT

MINI PCIE SLOT

LENOVO CONFIDENTIAL

	DATE	EC NO.	PART NO.
	20061220	L11403	42W7622
			DEVELOPMENT NO. / Q/M: 58 / 97

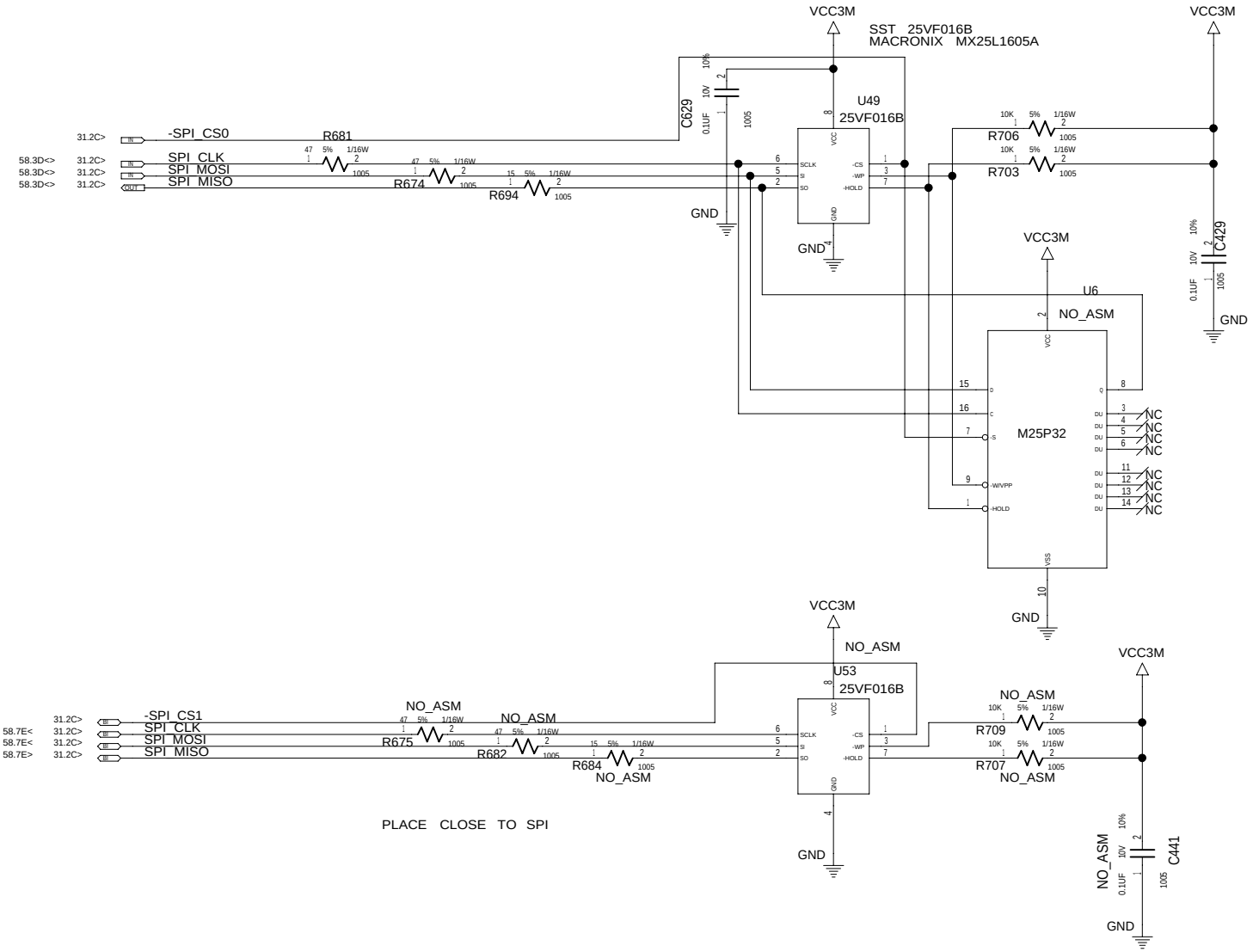

DESIGNER	K.Y	06/01/06
CHECKED	Y.I	06/01/06
APPROVED	T.S	06/01/06
CLASS	T.S	06/01/06

THIS DOCUMENT IS THE PROPERTY OF LENOVO.ITS USE IS AUTHORIZED ONLY FOR RESPONDING TO A REQUEST FOR QUOTATION OR FOR THE PERFORMANCE OF WORK FOR LENOVO.ALL QUESTIONS MUST BE REFERRED TO THE LENOVO PURCHASING DEPARTMENT.

PART NO. 42W7622

TITLE MLB-1 SVT

EEPROM/FLASH/SHARED

LENOVO CONFIDENTIAL

	DATE	EC NO.	PART NO.
	20061220	L11403	42W7622
			DEVELOPMENT NO.
			Q/M 59 / 97

CLOSE TO DOCK CONN.

TXCP R763 NO_ASM TXCN
TX0P R841 NO_ASM TX0N
TX1P R844 NO_ASM TX1N
TX2P R845 R154 NO_ASM TX2N
TX3P R535 NO_ASM TX3N
TX4P R593 NO_ASM TX4N
TX5P NO_ASM TX5N

J23 P04_FJ00055_100(1/2)

DOCKID<2..0>
-D_PERST
PCIE_DOCK_RX1P
PCIE_DOCK_RX1N
-PCIE_WAKE
-DOCK_CLKREQ_IN
DOCK_LED_CTL0
DOCK_LED_CTL1
DOCK_SCL
DOCK_SDA
-PWRON_DOCK
B_ON_DOCK
EXTPWRG
-DASP_DOCK
MSCLK
MSDATA
XKBDCLK
XKBDDATA
D_P_SERIRQ
DOCKID<2..0>
ACDC_ID
DOCK_CONSUMP
-PWRSWITCH
SPDIF_OUT
PCIE_DOCK_TX1P
PCIE_DOCK_TX1N
PCIE_CLK_DOCK
-PCIE_CLK_DOCK
TMDS_SCL
TMDS_SDA
-D_LPC_DREQ0
D_SIO_14M
-D_CLKRUN
-D_LPC_FRAME
D_LPCCLK_SIO_33M
-RJ45_LINKUP_DOCK
-RJ45_ACTIVITY_DOCK
DOCK_CT_REF_VOL
RJ11_RING_DOCK

VCC3M R302 10K 5% 1/16W 1005
R515 0 5% 1/16W 1005
DOCK-PWR20
Q85 SI4435BDY
DOCK-PWR20-IN
C24 0.1UF 10% 25V 1608
C550 4.7UF 10% 10V 1608
C566 0.1UF 10% 25V 1608
R731 200K 5% 1/16W 1005
R657 100K 5% 1/16W 1005
-DOCK_ATTACHED_20
GND

VCC5M
NANOSMDC050F MF_NSMF050
F14 POLY SW
NO_ASM 1K 5% 1/16W 1005 R1228

J23 P04_FJ00055_100(2/2)

-DOCK_MICIN_DTCT
-DOCK_HPOUT_DTCT
USBP9+
USBP9-
-DOCK_EVENT
TX0N
TX0P
TX2N
TX2P
TX3N
TX3P
TXCP
TXCN
DDCCLK_ID3
DDCDATA_ID1
D_LPC_AD0
D_LPC_AD1
D_LPC_AD2
D_LPC_AD3
DOCK_MDI_3+
DOCK_MDI_3-
DOCK_MDI_2+
DOCK_MDI_2-
RJ11_TIP_DOCK

VCC5B
R2 47K 5% 1/16W 1005
-DOCK_ATTACHED_5B
-DOCK_ATTACHED_20
VCC3M
R603 100K 5% 1/16W 1005
-DOCK_ATTACHED_3M
-DOCK_ATTACHED_AUX
D2 DAN222
D91 1SS400G
D61 1SS400G
DOCK_HP_OUT_R
DOCK_HP_OUT_L
DOCK_MIC_IN_L
DVI_DTCT
TX1N
TX1P
TX4N
TX4P
TX5N
TX5P
CRT_RED_DOCK
CRT_GREEN_DOCK
CRT_BLUE_DOCK
CRT_HSYNC_DOCK
CRT_VSYNC_DOCK
-D_LPCPD
-D_PLTRST
ACZ1005Y-152 L201
DOCK_MDI_1+
DOCK_MDI_1-
DOCK_MDI_0+
DOCK_MDI_0-
C764 1000PF 10% 50V X7R 1005
C774 C828 C1086
GND AGND

DESIGNER	K.Y	06/01/06
CHECKED	Y.I	06/01/06
APPROVED	T.S	06/01/06
CLASS	T.S	06/01/06

THIS DOCUMENT IS THE PROPERTY OF LENOVO.ITS USE IS AUTHORIZED ONLY FOR RESPONDING TO A REQUEST FOR QUOTATION OR FOR THE PERFORMANCE OF WORK FOR LENOVO.ALL QUESTIONS MUST BE REFERRED TO THE LENOVO PURCHASING DEPARTMENT.

PART NO. 42W7622

TITLE MLB-1 SVT

DOCKING CONNECTOR

LENOVO CONFIDENTIAL

E10A DEBUG I/F	ENABLE	DISABLE(FINAL LOGIC)
R955	NO_ASM	ASM
R971	NO_ASM	ASM
D58	ASM	NO_ASM
D69	ASM	NO_ASM
R289	ASM	NO_ASM
D75	ASM	NO_ASM
R831	ASM	NO_ASM
R327	ASM	NO_ASM

	DATE	EC NO.	PART NO.
	20061220	L11403	42W7622
			DEVELOPMENT NO. / Q/M
			60 / 97

NEAR H8S/2169A SHORT PATTERN. NO PATTERN UNDER THIS AREA.

PLACE NEAR H8

DO NOT MOVE

DESIGNER	K.Y	06/01/06
CHECKED	Y.I	06/01/06
APPROVED	T.S	06/01/06
CLASS	T.S	06/01/06

THIS DOCUMENT IS THE PROPERTY OF LENOVO.ITS USE IS AUTHORIZED ONLY FOR RESPONDING TO A REQUEST FOR QUOTATION OR FOR THE PERFORMANCE OF WORK FOR LENOVO.ALL QUESTIONS MUST BE REFERRED TO THE LENOVO PURCHASING DEPARTMENT.

PART NO. 42W7622

TITLE MLB-1 SVT

H8S/2116B (1/2)

LENOVO CONFIDENTIAL

42W7622

	DATE	EC NO.	PART NO.
	20061220	L11403	42W7622
			DEVELOPMENT NO. / Q/M: 61 / 97

TEST PAD X2
BOTTOM SIDE
DO NOT MOVE AFTER FIX

TP42 TESTPAD
TP43 TESTPAD

H8
I2C BUS2

H8_SCL2 OUT 61.7P> 61.3B< 69.6E<
H8_SDA2 OUT 69.6E<> 61.3B<

VCC3M
NEAR RN54
C448 10V 10% 1608 4.7UF
R395 4.7K 1/16W 5% 1005
R396 4.7K 1/16W 5% 1005
RN54 4.7K 1/32W 5%
R676 10K 1/16W 5% 1005
R687 10K 1/16W 5% 1005

59.4A< 61.4B> DOCK_SCL
78.7G< 61.4B> I2C_CLK_BT0
78.5F< 61.4B> I2C_CLK_BT1
61.3B<> 59.4A<> DOCK_SDA
78.7G<> 61.4B<> I2C_DATA_BT0
78.4F<> 61.4B<> I2C_DATA_BT1

SMB_CLK_ME IN 31.3P<> 61.4B>
SMB_DATA_ME BI 31.3P<> 61.4B<>

VCC3B
R412 33 5% 1/16W 1005
R153 33 5% 1/16W 1005
R906 100K 5% 1/16W 1005
C196 220PF 50V 5% 1005
C188 220PF 50V 5% 1005
GND

VCC3M
NO_ASM
R910 100K 5% 1/16W 1005
R909 100K 5% 1/16W 1005
R377 100K 1/16W 5% 1005

R1027 0 5% 1/16W 1005
R1028 0 5% 1/16W 1005
R1029 0 5% 1/16W 1005
R1030 0 5% 1/16W 1005

U23
H8S2116(2/2)

59.2A< 62.0D<> 59.3A> XKBDCLK
59.2A< 62.1D<> 59.3A> XKBDDATA
59.3A< 59.2A< 62.1D<> MSCLK
59.3A< 59.2A< 62.2D<> MSDATA
63.2L<> IPDCLK
63.2L<> IPDDATA

78.7G< 61.8B> I2C_CLK_BT0
78.7G<> 61.7B<> I2C_DATA_BT0
78.5F<> 61.8B> I2C_CLK_BT1
78.4F<> 61.7B<> I2C_DATA_BT1

61.8K< 31.3P<> SMB_CLK_ME
61.7K<> 31.3P<> SMB_DATA_ME
59.4A< 61.8B> DOCK_SCL
61.7B> 59.4A<> DOCK_SDA

69.6E<> 61.7P> H8_SDA2
69.6E< 61.7P> H8_SCL2

NO_ASM
C777 68PF 50V 5% 1005
C778 68PF 50V 5% 1005

31.2L< -KBRC
46.6B< H8_SPKR
GND

32.2M< -BATLOW
71.3B< FAN_ON
79.4L< BATMON_EN
46.3E< -BEEP_ENABLE
32.2M> 32.2M> -S4_STATE
-ICH_SLP_S5
R1516 10 5% 1/16W 1005
NO_ASM
59.5A< DOCK_LED_CTL0
59.5A< DOCK_LED_CTL1

59.7Q> -DOCK_ATTACHED_3M
91.5B< 23.7P> 90.3H< PANEL_POWER_ON
32.1M< 10.2B< 91.3M> 87.1N> BPWRG
70.0H< 69.6B< 69.5E< 64.6B<

C757 330PF 50V 5% 1005
C758 330PF 50V 5% 1005
C759 330PF 50V 5% 1005
C761 330PF 50V 5% 1005
R690 100K 1/16W 5% 1005
GND

VCC3M
NO_ASM
R924 10K 1/16W 5% 1005
R923 20K 1/16W 5% 1005
R277 100K 1/16W 5% 1005
R922 100K 1/16W 5% 1005
R935 100K 1/16W 5% 1005
R936 100K 1/16W 5% 1005
R926 100K 1/16W 5% 1005
R218 100K 1/16W 5% 1005
R929 10K 1/16W 5% 1005
R1012 10K 1/16W 5% 1005
R1041 10K 1/16W 5% 1005
R1042 20K 1/16W 5% 1005
R263 100K 1/16W 5% 1005

EXTPWR_H8
VIDEO_ID
R269 560 5% 1/16W 1005
R892 560 5% 1/16W 1005
R1011 0 5% 1/16W 1005
R1008 0 5% 1/16W 1005

D7 RB521S_30
D80 RB521S_30

-EXTPWR OUT 76.1B> 64.0K< 91.4B<
-PWRSW OUT 64.9B>
-HOTKEY OUT 62.7N> 64.5P<
-PM_SLP_S3 OUT 64.6P> 81.1A<
-PM_SLP_S4 OUT 64.5P<
+HP_JACK_IN OUT 42.7N>
GLOBAL_WL_DISABLE OUT 66.5L>
BAY_IS_HDD OUT 37.3N>
-PWRSW_H8 OUT 32.1M<
FAN_FRQ IN 71.4N>
-MISCSMI IN 64.5P>
-90W_AC OUT 76.8L>
-LPMODE IN 91.3M> 95.6Q>
MIC_DISABLE OUT 41.2D<
LEDNUMLOCK OUT 28.4Q<
LEDCPSLOCK OUT 28.5Q<
BAYLED OUT 38.6K<
-BAY_ATTACH IN 37.3N>
LID_SWITCH IN 28.6M>
KBD_LIGHT_ON OUT 28.3N<
-GSENSE_ON OUT 72.7A<
GSENSE_TST OUT 72.5A<
CHARGE_CELL1 OUT 76.8M>
LAN_WOL_EN OUT 32.3P> 80.1F<
-ICH_SLP_M IN 32.2M> 80.3H<
AC_PRESENT OUT 32.4N< 80.2F<
-AMT_ALERT BI 32.4N>
-DOCK_EVENT OUT 59.5J>
-BAY_UNLOCK OUT 38.7L>
-MAINOFF OUT 64.6A<
-SPK_MUTE OUT 45.3A<
-MUTE OUT 45.5A<
DISCHARGE OUT 75.3B< 91.3B<

GFX	EXT.	INT.
R922	ASM	NO_ASM
R925	NO_ASM	ASM

NO_ASM R402 100K 1/16W 5% 1005 GND
NO_ASM R925 100K 1/16W 5% 1005 GND
NO_ASM R877 100K 1/16W 5% 1005 GND
R927 100K 1/16W 5% 1005 GND
NO_ASM R1258 100K 1/16W 5% 1005 GND
R930 100K 1/16W 5% 1005 GND
R891 100K 1/16W 5% 1005 GND

DESIGNER	K.Y	06/01/06
CHECKED	Y.I	06/01/06
APPROVED	T.S	06/01/06
CLASS	T.S	06/01/06

THIS DOCUMENT IS THE PROPERTY OF LENOVO.ITS USE IS AUTHORIZED ONLY FOR RESPONDING TO A REQUEST FOR QUOTATION OR FOR THE PERFORMANCE OF WORK FOR LENOVO.ALL QUESTIONS MUST BE REFERRED TO THE LENOVO PURCHASING DEPARTMENT.

PART NO. 42W7622
TITLE MLB-1 SVT
H8S/2116B (2/2)

LENOVO CONFIDENTIAL

42W7622

	DATE	EC NO.	PART NO.
	20061220	L11403	42W7622
			DEVELOPMENT NO. / Q/M: 62 / 97

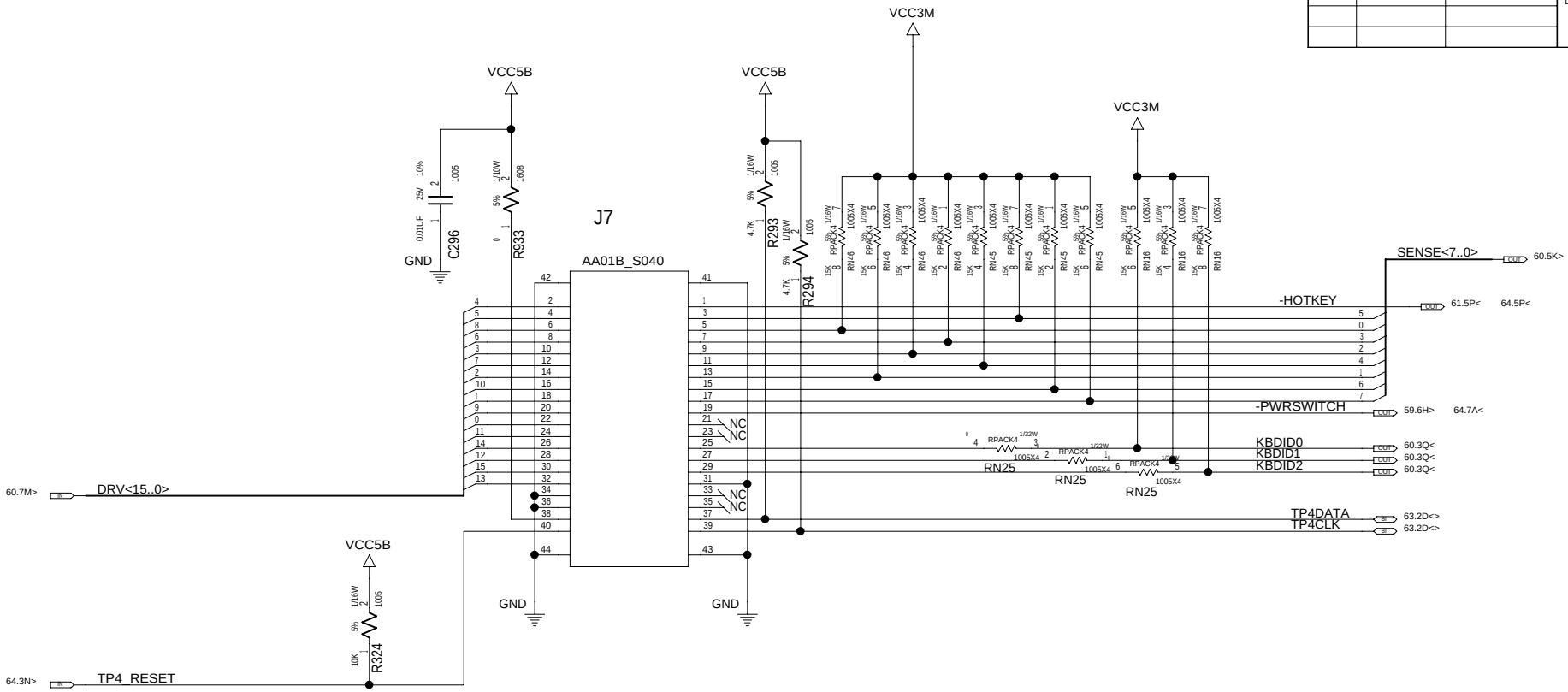

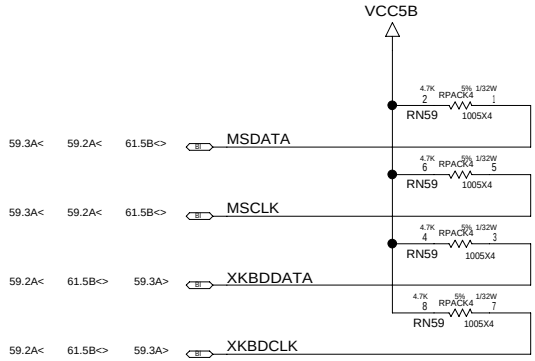

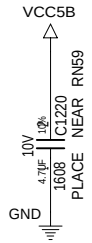

DESIGNER	K.Y	06/01/06
CHECKED	Y.I	06/01/06
APPROVED	T.S	06/01/06
CLASS	T.S	06/01/06

THIS DOCUMENT IS THE PROPERTY OF LENOVO.ITS USE IS AUTHORIZED ONLY FOR RESPONDING TO A REQUEST FOR QUOTATION OR FOR THE PERFORMANCE OF WORK FOR LENOVO.ALL QUESTIONS MUST BE REFERRED TO THE LENOVO PURCHASING DEPARTMENT.

PART NO. 42W7622

TITLE MLB-1 SVT

KEYBOARD CONNECTOR

LENOVO CONFIDENTIAL

42W7622

	DATE	EC NO.	PART NO.
	20061220	L11403	42W7622
			DEVELOPMENT NO. / Q/M: 63 / 97

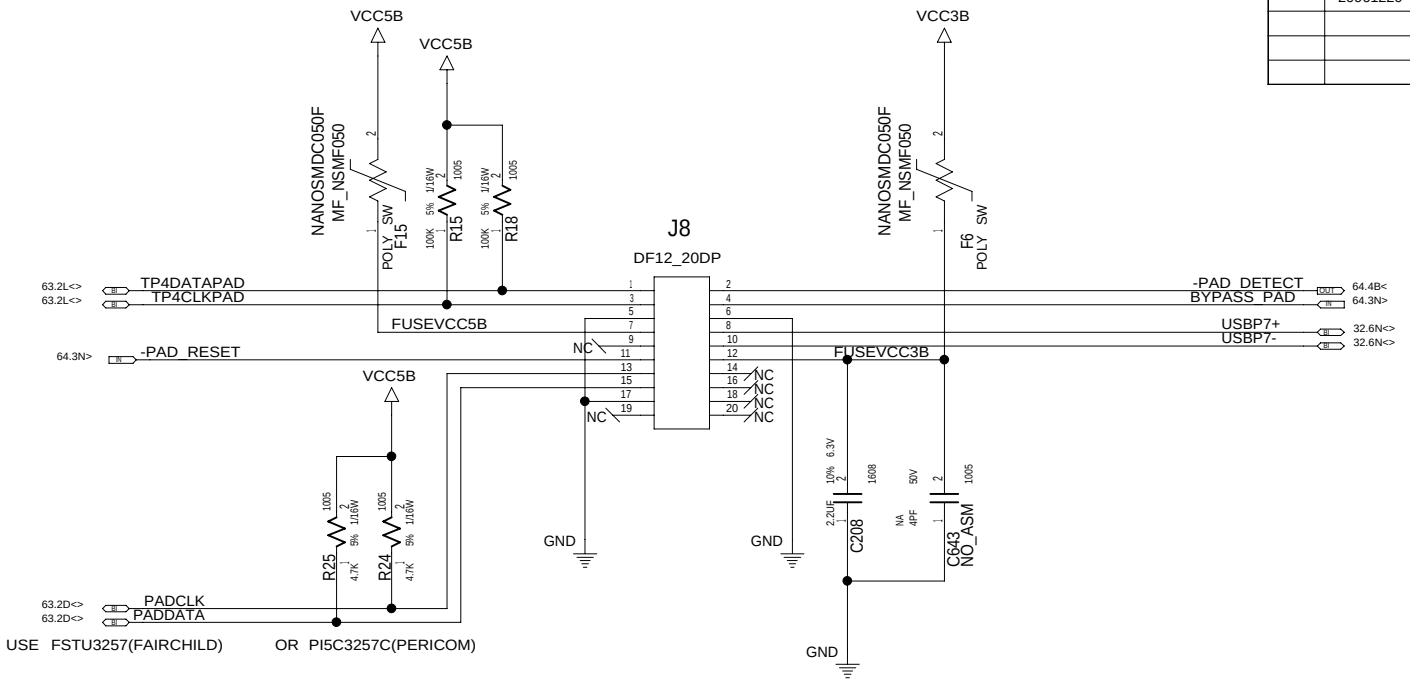

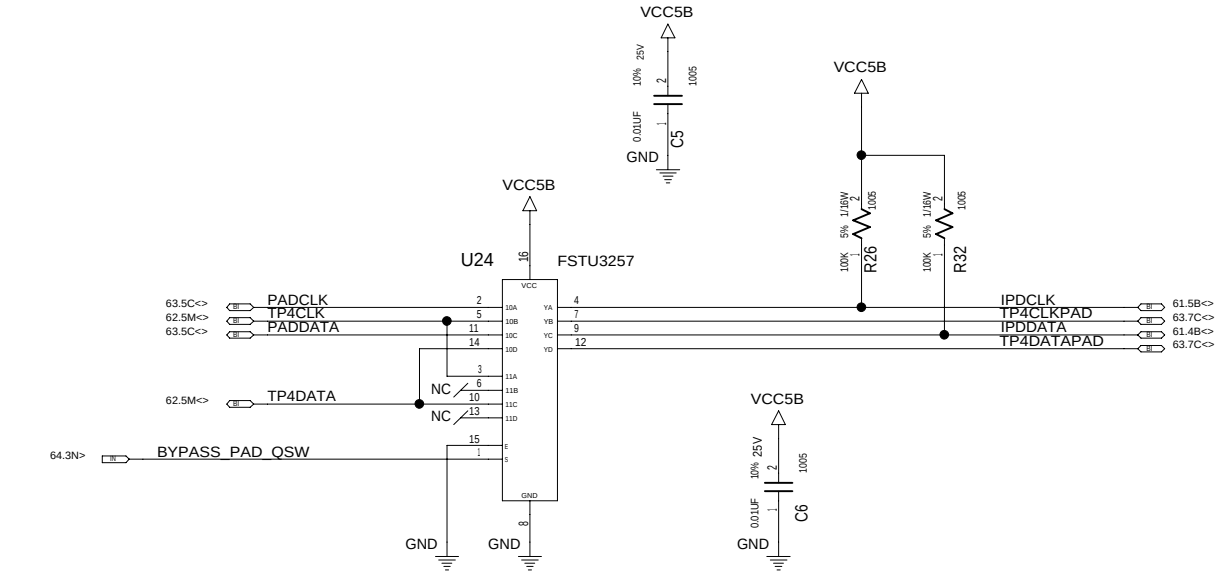

DESIGNER	K.Y	06/01/06
CHECKED	Y.I	06/01/06
APPROVED	T.S	06/01/06
CLASS	T.S	06/01/06

THIS DOCUMENT IS THE PROPERTY OF LENOVO.ITS USE IS AUTHORIZED ONLY FOR RESPONDING TO A REQUEST FOR QUOTATION OR FOR THE PERFORMANCE OF WORK FOR LENOVO.ALL QUESTIONS MUST BE REFERRED TO THE LENOVO PURCHASING DEPARTMENT.

PART NO. 42W7622

TITLE MLB-1 SVT

TOUCH PAD CONNECTOR

LENOVO CONFIDENTIAL

42W7622

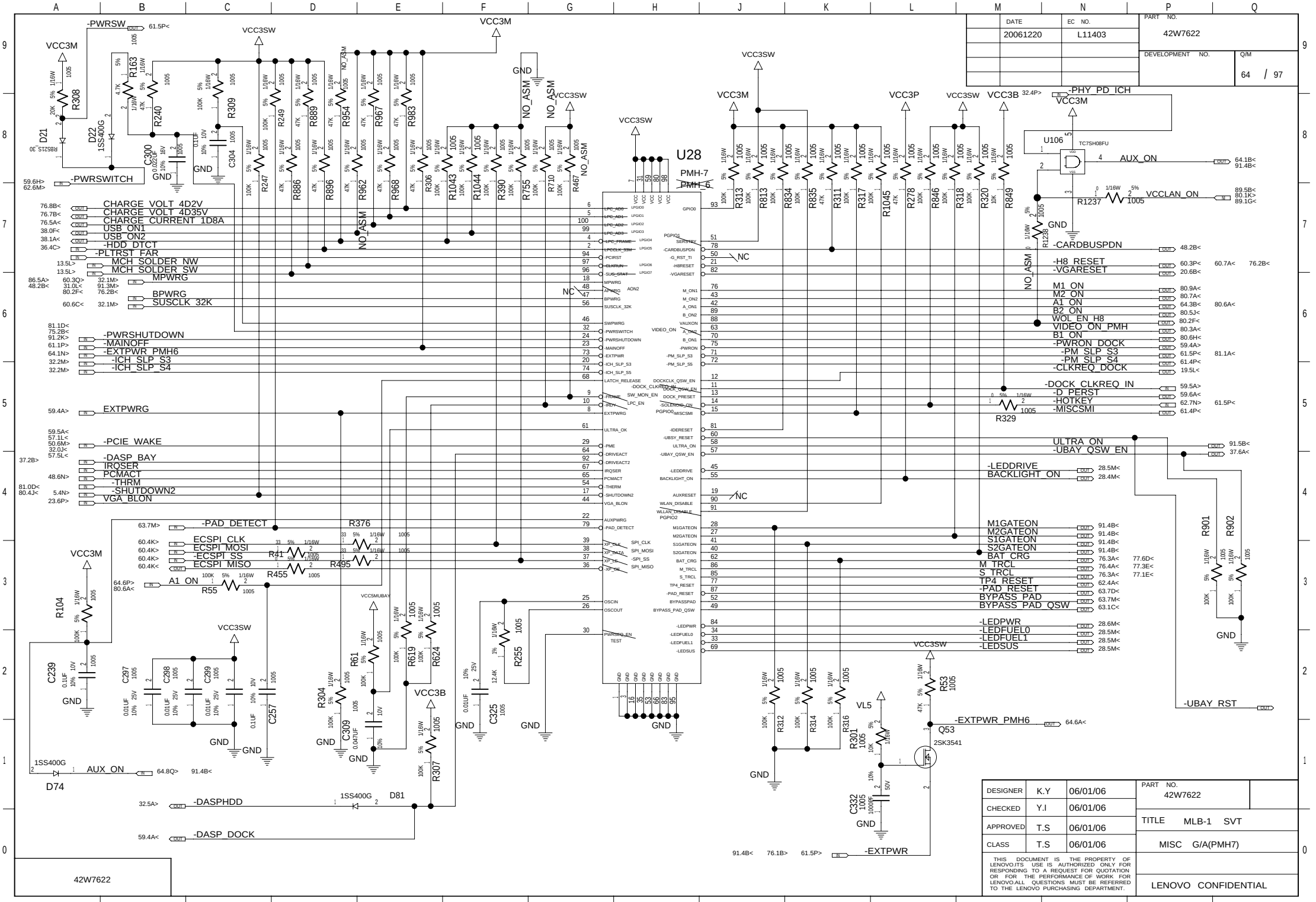

	DATE	EC NO.
	20061220	L11403

PART NO. 42W7622

DEVELOPMENT NO.

Q/M 64 / 97

DESIGNER	K.Y	06/01/06
CHECKED	Y.I	06/01/06
APPROVED	T.S	06/01/06
CLASS	T.S	06/01/06

PART NO. 42W7622

TITLE MLB-1 SVT

MISC G/A(PMH7)

THIS DOCUMENT IS THE PROPERTY OF LENOVO.ITS USE IS AUTHORIZED ONLY FOR RESPONDING TO A REQUEST FOR QUOTATION OR FOR THE PERFORMANCE OF WORK FOR LENOVO.ALL QUESTIONS MUST BE REFERRED TO THE LENOVO PURCHASING DEPARTMENT.

LENOVO CONFIDENTIAL

42W7622

	DATE	EC NO.	PART NO.
	20061220	L11403	42W7622
			DEVELOPMENT NO. / Q/M: 65 / 97

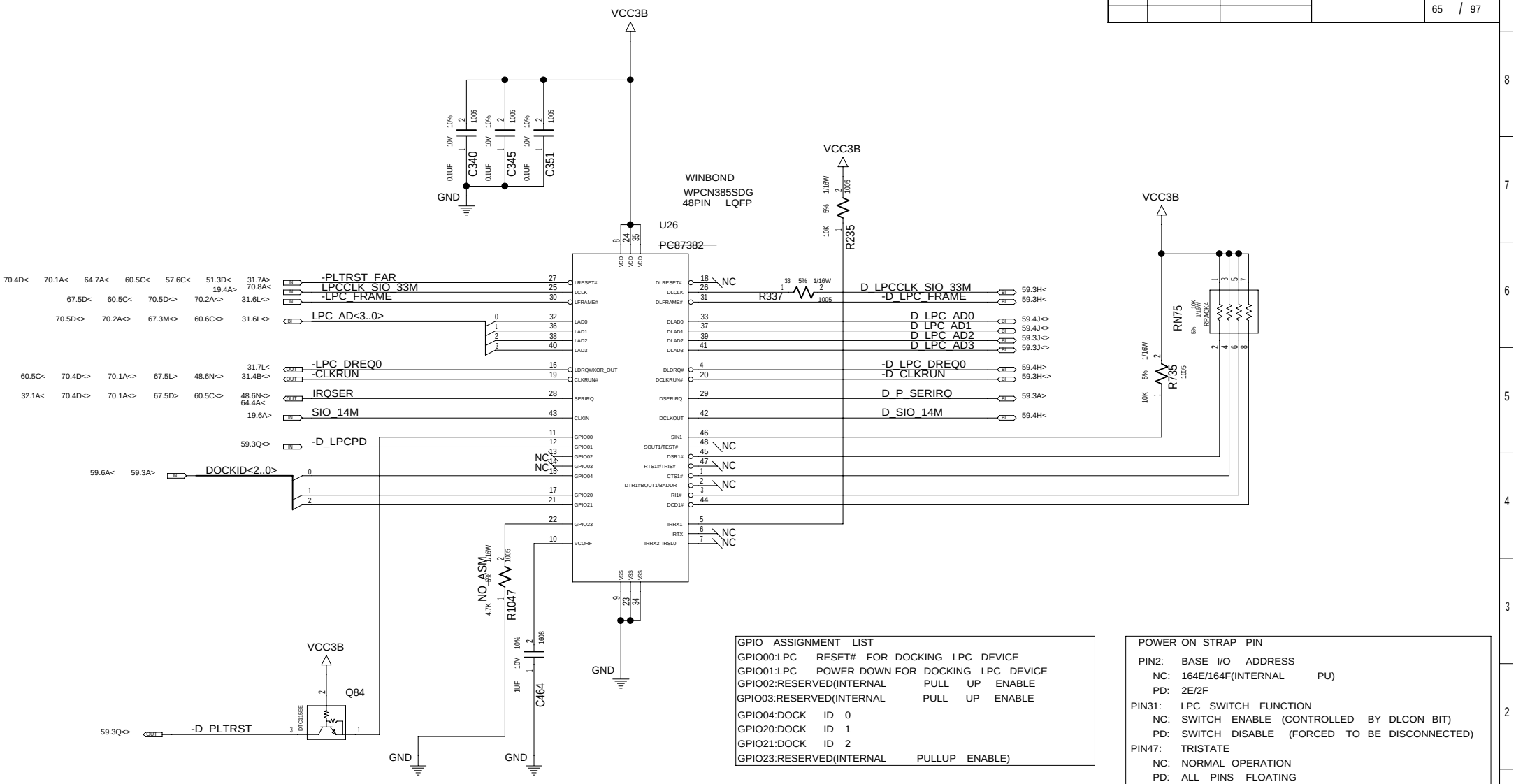

GPIO ASSIGNMENT LIST

GPIO00:LPC RESET# FOR DOCKING LPC DEVICE
GPIO01:LPC POWER DOWN FOR DOCKING LPC DEVICE
GPIO02:RESERVED(INTERNAL PULL UP ENABLE
GPIO03:RESERVED(INTERNAL PULL UP ENABLE
GPIO04:DOCK ID 0
GPIO20:DOCK ID 1
GPIO21:DOCK ID 2
GPIO23:RESERVED(INTERNAL PULLUP ENABLE)

POWER ON STRAP PIN

PIN2: BASE I/O ADDRESS
NC: 164E/164F(INTERNAL PU)
PD: 2E/2F
PIN31: LPC SWITCH FUNCTION
NC: SWITCH ENABLE (CONTROLLED BY DLCON BIT)
PD: SWITCH DISABLE (FORCED TO BE DISCONNECTED)
PIN47: TRISTATE
NC: NORMAL OPERATION
PD: ALL PINS FLOATING
PIN48: TEST
NC: NORMAL OPERATION
PD: TEST MODE

DESIGNER	K.Y	06/01/06
CHECKED	Y.I	06/01/06
APPROVED	T.S	06/01/06
CLASS	T.S	06/01/06

THIS DOCUMENT IS THE PROPERTY OF LENOVO.ITS USE IS AUTHORIZED ONLY FOR RESPONDING TO A REQUEST FOR QUOTATION OR FOR THE PERFORMANCE OF WORK FOR LENOVO.ALL QUESTIONS MUST BE REFERRED TO THE LENOVO PURCHASING DEPARTMENT.

PART NO. 42W7622

TITLE MLB-1 SVT

SUPER I/O

48PIN PITCH=0.5MM

LENOVO CONFIDENTIAL

	DATE	EC NO.	PART NO.
	20061220	L11403	42W7622
			DEVELOPMENT NO.
			Q/M 66 / 97

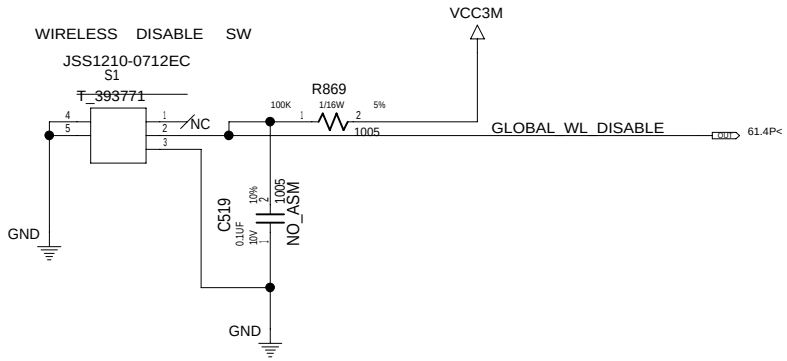

DESIGNER	K.Y	06/01/06	PART NO. 42W7622
CHECKED	Y.I	06/01/06	
APPROVED	T.S	06/01/06	TITLE MLB-1 SVT
CLASS	T.S	06/01/06	WIRELESS DISABLE SW

THIS DOCUMENT IS THE PROPERTY OF LENOVO.ITS USE IS AUTHORIZED ONLY FOR RESPONDING TO A REQUEST FOR QUOTATION OR FOR THE PERFORMANCE OF WORK FOR LENOVO.ALL QUESTIONS MUST BE REFERRED TO THE LENOVO PURCHASING DEPARTMENT.

LENOVO CONFIDENTIAL

	DATE	EC NO.	PART NO. 42W7622
	20061220	L11403	DEVELOPMENT NO.
			Q/M 67 / 97

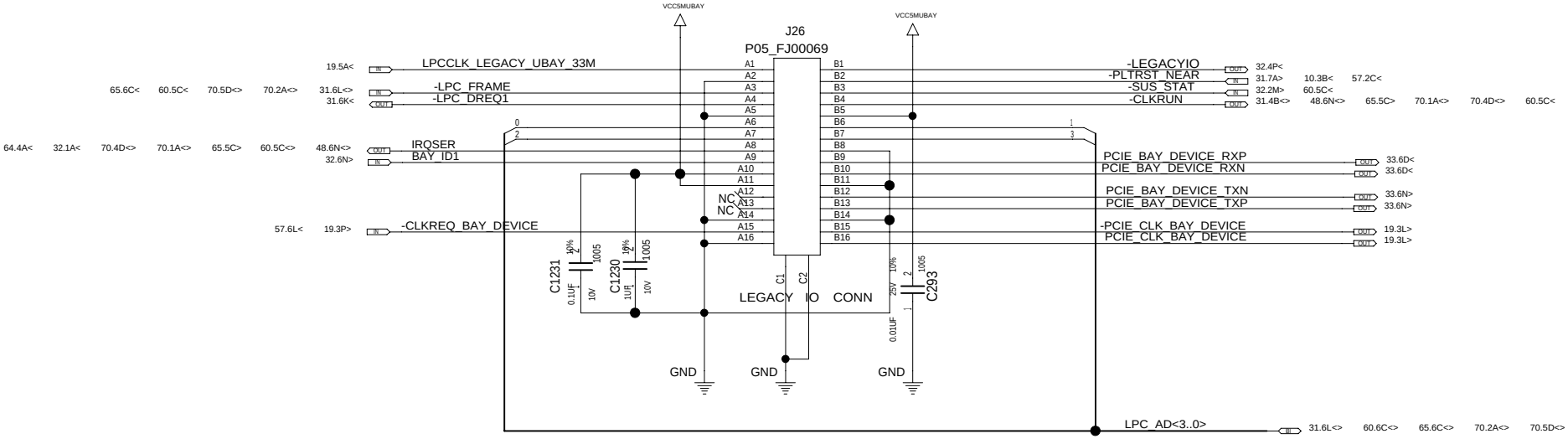

DESIGNER	K.Y	06/01/06	PART NO. 42W7622
CHECKED	Y.I	06/01/06	
APPROVED	T.S	06/01/06	TITLE MLB-1 SVT
CLASS	T.S	06/01/06	SERIAL INTERFACE

THIS DOCUMENT IS THE PROPERTY OF LENOVO.ITS USE IS AUTHORIZED ONLY FOR RESPONDING TO A REQUEST FOR QUOTATION OR FOR THE PERFORMANCE OF WORK FOR LENOVO.ALL QUESTIONS MUST BE REFERRED TO THE LENOVO PURCHASING DEPARTMENT.

LENOVO CONFIDENTIAL

	DATE	EC NO.	PART NO.
	20061220	L11403	42W7622
			DEVELOPMENT NO.
			Q/M 68 / 97

BLANK PAGE

DESIGNER	K.Y	06/01/06	PART NO. 42W7622
CHECKED	Y.I	06/01/06	
APPROVED	T.S	06/01/06	TITLE MLB-1 SVT
CLASS	T.S	06/01/06	BLANK PAGE

THIS DOCUMENT IS THE PROPERTY OF LENOVO.ITS USE IS AUTHORIZED ONLY FOR RESPONDING TO A REQUEST FOR QUOTATION OR FOR THE PERFORMANCE OF WORK FOR LENOVO.ALL QUESTIONS MUST BE REFERRED TO THE LENOVO PURCHASING DEPARTMENT.

LENOVO CONFIDENTIAL

	DATE	EC NO.	PART NO.
	20061220	L11403	42W7622
			DEVELOPMENT NO. / Q/M: 69 / 97

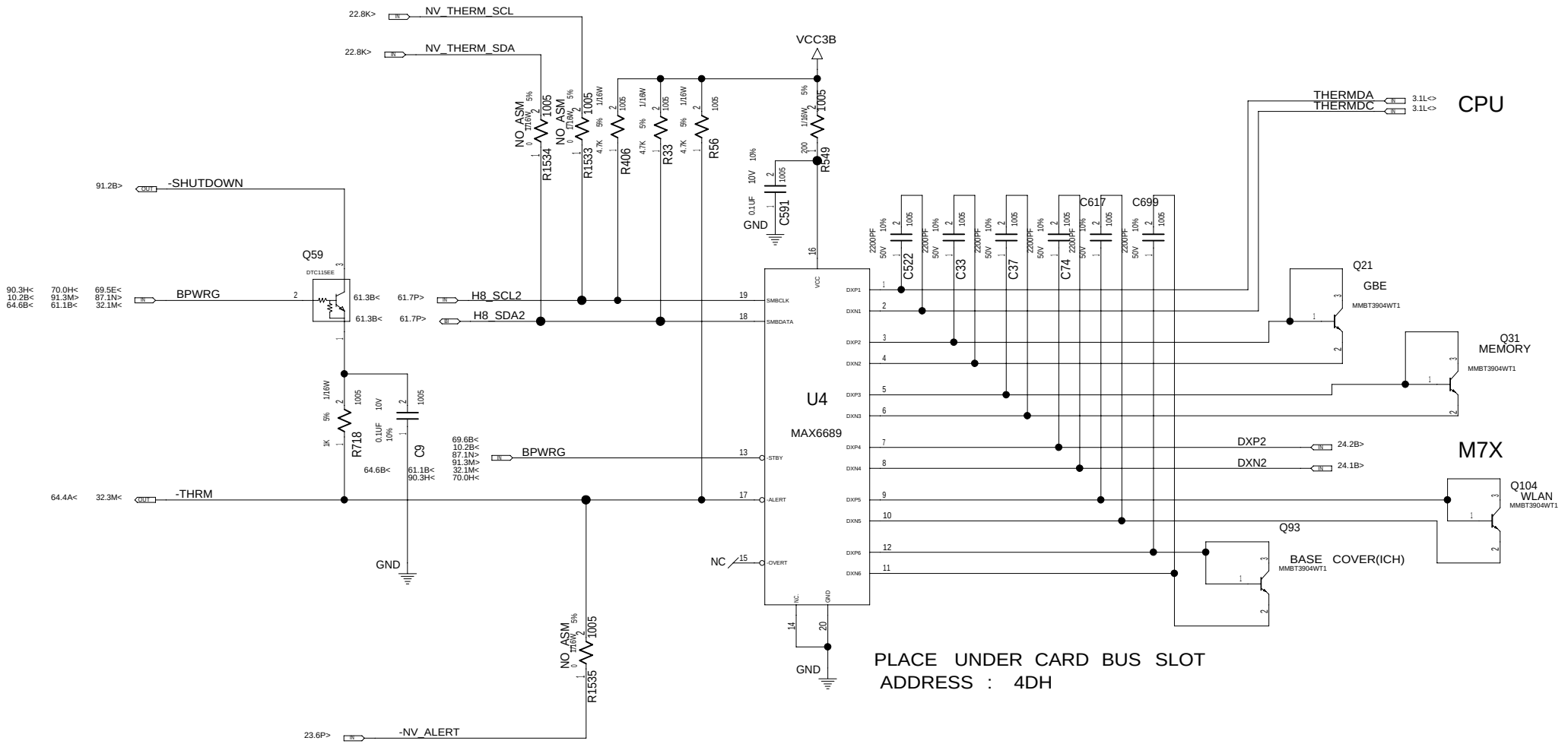

DESIGNER	K.Y	06/01/06
CHECKED	Y.I	06/01/06
APPROVED	T.S	06/01/06
CLASS	T.S	06/01/06

THIS DOCUMENT IS THE PROPERTY OF LENOVO.ITS USE IS AUTHORIZED ONLY FOR RESPONDING TO A REQUEST FOR QUOTATION OR FOR THE PERFORMANCE OF WORK FOR LENOVO.ALL QUESTIONS MUST BE REFERRED TO THE LENOVO PURCHASING DEPARTMENT.

PART NO. 42W7622

TITLE MLB-1 SVT

THERMAL SENSOR

LENOVO CONFIDENTIAL

42W7622

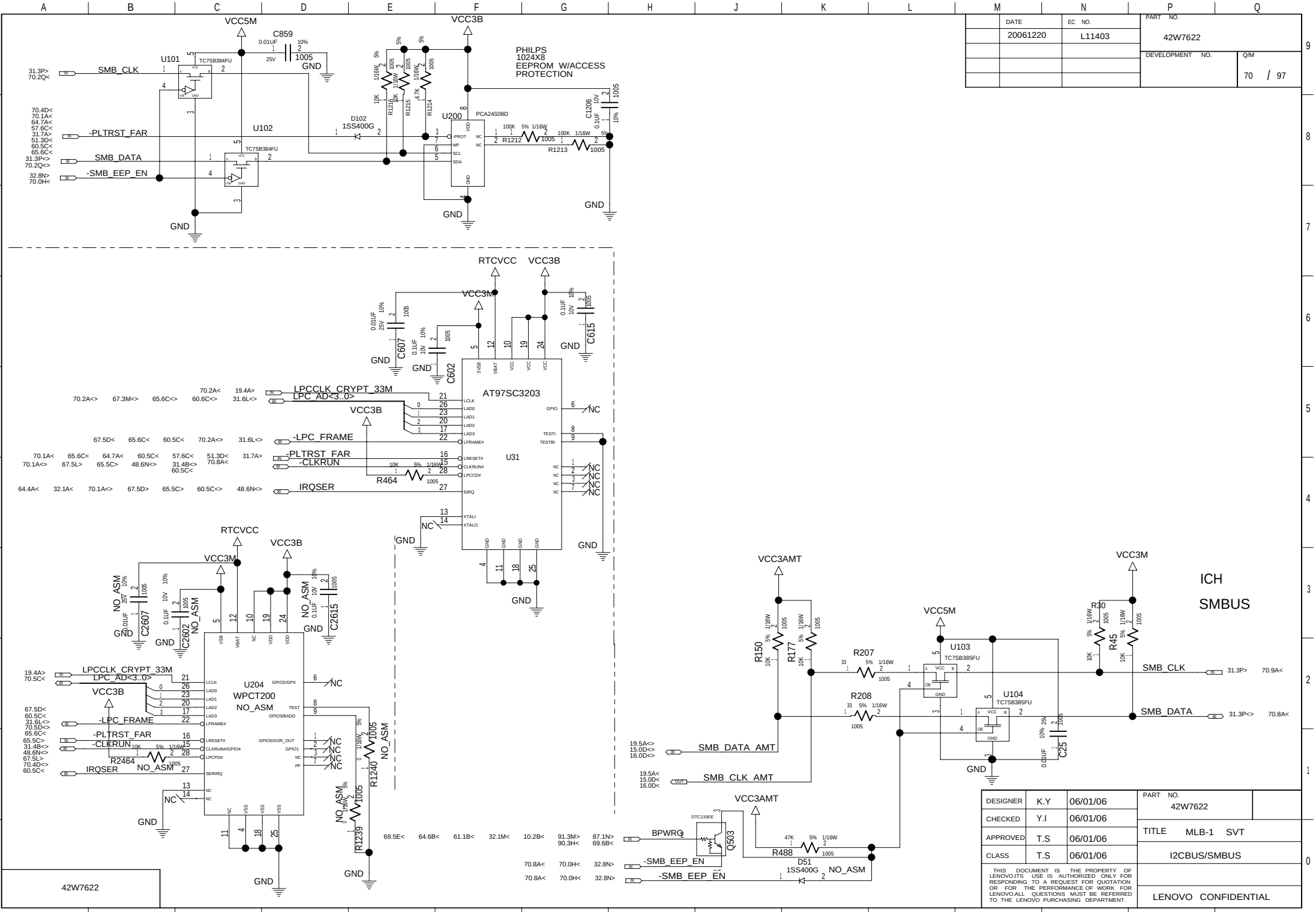

	DATE	EC NO.	PART NO.
	20061220	L11403	42W7622
			DEVELOPMENT NO.
			Q/M 70 / 97

DESIGNER	K.Y	06/01/06
CHECKED	Y.I	06/01/06
APPROVED	T.S	06/01/06
CLASS	T.S	06/01/06

PART NO. 42W7622

TITLE MLB-1 SVT

I2CBUS/SMBUS

THIS DOCUMENT IS THE PROPERTY OF LENOVO.ITS USE IS AUTHORIZED ONLY FOR RESPONDING TO A REQUEST FOR QUOTATION OR FOR THE PERFORMANCE OF WORK FOR LENOVO.ALL QUESTIONS MUST BE REFERRED TO THE LENOVO PURCHASING DEPARTMENT.

LENOVO CONFIDENTIAL

42W7622

	DATE	EC NO.	PART NO.
	20061220	L11403	42W7622
			DEVELOPMENT NO. / Q/M: 71 / 97

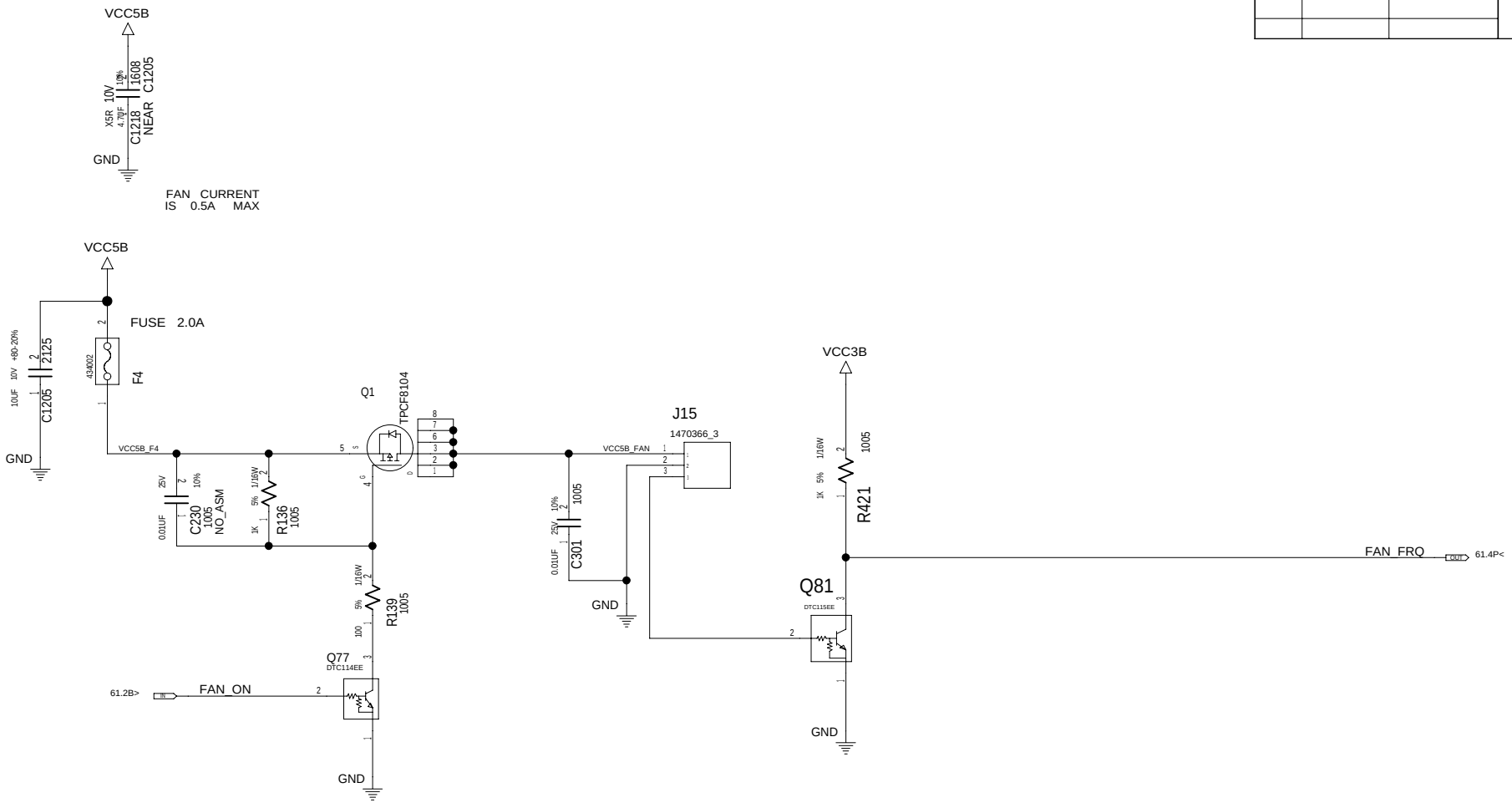

DESIGNER	K.Y	06/01/06	PART NO. 42W7622
CHECKED	Y.I	06/01/06	
APPROVED	T.S	06/01/06	TITLE MLB-1 SVT
CLASS	T.S	06/01/06	FAN CONNECTOR

THIS DOCUMENT IS THE PROPERTY OF LENOVO.ITS USE IS AUTHORIZED ONLY FOR RESPONDING TO A REQUEST FOR QUOTATION OR FOR THE PERFORMANCE OF WORK FOR LENOVO.ALL QUESTIONS MUST BE REFERRED TO THE LENOVO PURCHASING DEPARTMENT.

LENOVO CONFIDENTIAL

	DATE	EC NO.	PART NO.
	20061220	L11403	42W7622
			DEVELOPMENT NO. / Q/M: 72 / 97

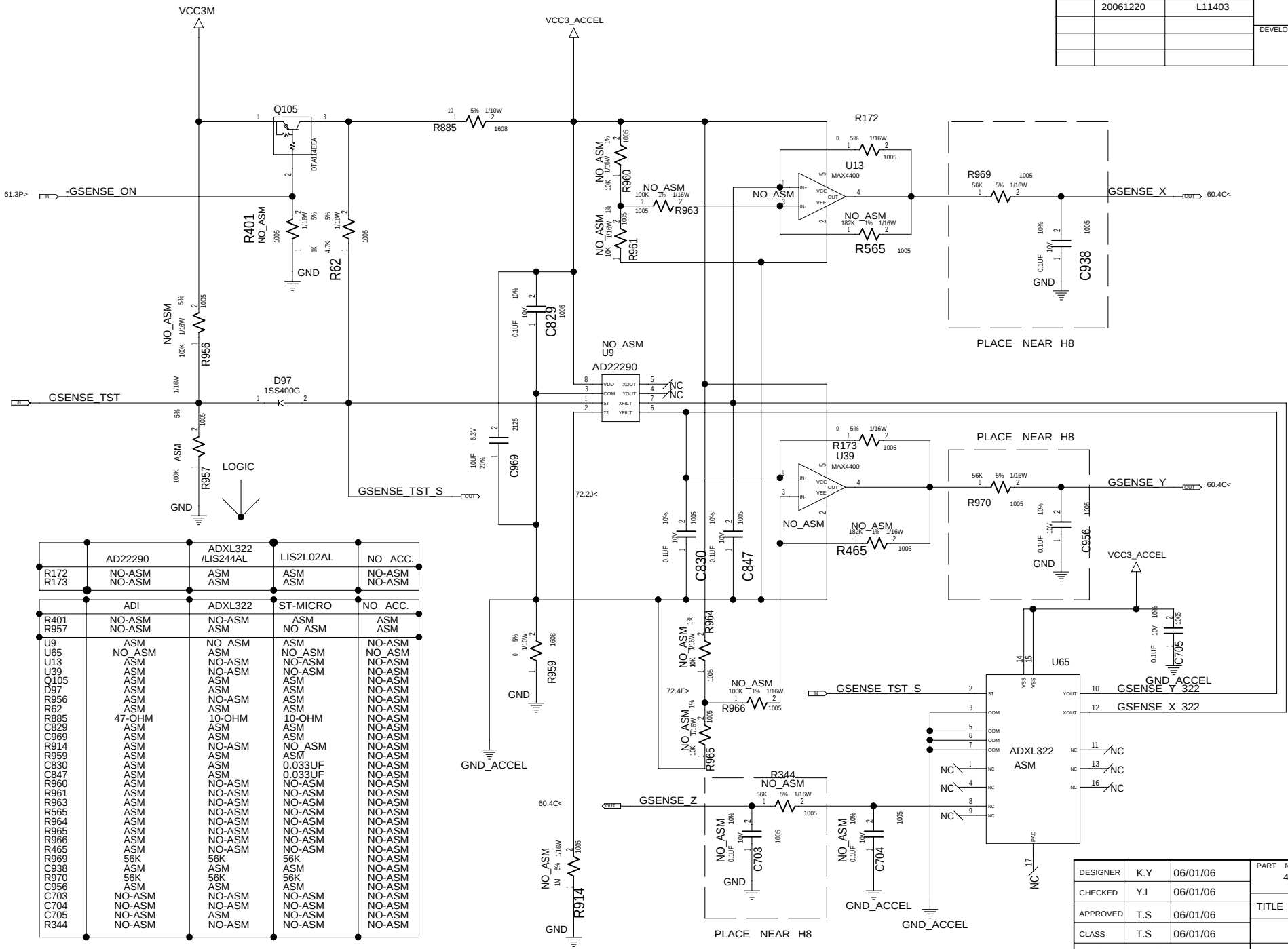

	AD22290	ADXL322 /LIS244AL	LIS2L02AL	NO ACC.
R172	NO-ASM	ASM	ASM	NO-ASM
R173	NO-ASM	ASM	ASM	NO-ASM

	ADI	ADXL322	ST-MICRO	NO ACC.
R401	NO-ASM	NO-ASM	ASM	ASM
R957	NO-ASM	ASM	NO_ASM	ASM
U9	ASM	NO_ASM	ASM	NO-ASM
U65	NO_ASM	ASM	NO_ASM	NO_ASM
U13	ASM	NO-ASM	NO-ASM	NO-ASM
U39	ASM	NO-ASM	NO-ASM	NO-ASM
Q105	ASM	ASM	ASM	NO-ASM
D97	ASM	ASM	ASM	NO-ASM
R956	ASM	NO-ASM	ASM	NO-ASM
R62	ASM	ASM	ASM	NO-ASM
R885	47-OHM	10-OHM	10-OHM	NO-ASM
C829	ASM	ASM	ASM	NO-ASM
C969	ASM	ASM	ASM	NO-ASM
R914	ASM	NO-ASM	NO_ASM	NO-ASM
R959	ASM	ASM	ASM	NO-ASM
C830	ASM	ASM	0.033UF	NO-ASM
C847	ASM	ASM	0.033UF	NO-ASM
R960	ASM	NO-ASM	NO-ASM	NO-ASM
R961	ASM	NO-ASM	NO-ASM	NO-ASM
R963	ASM	NO-ASM	NO-ASM	NO-ASM
R565	ASM	NO-ASM	NO-ASM	NO-ASM
R964	ASM	NO-ASM	NO-ASM	NO-ASM
R965	ASM	NO-ASM	NO-ASM	NO-ASM
R966	ASM	NO-ASM	NO-ASM	NO-ASM
R465	ASM	NO-ASM	NO-ASM	NO-ASM
R969	56K	56K	56K	NO-ASM
C938	ASM	ASM	ASM	NO-ASM
R970	56K	56K	56K	NO-ASM
C956	ASM	ASM	ASM	NO-ASM
C703	NO-ASM	NO-ASM	NO-ASM	NO-ASM
C704	NO-ASM	NO-ASM	NO-ASM	NO-ASM
C705	NO-ASM	ASM	NO-ASM	NO-ASM
R344	NO-ASM	NO-ASM	NO-ASM	NO-ASM

DESIGNER	K.Y	06/01/06
CHECKED	Y.I	06/01/06
APPROVED	T.S	06/01/06
CLASS	T.S	06/01/06

THIS DOCUMENT IS THE PROPERTY OF LENOVO.ITS USE IS AUTHORIZED ONLY FOR RESPONDING TO A REQUEST FOR QUOTATION OR FOR THE PERFORMANCE OF WORK FOR LENOVO.ALL QUESTIONS MUST BE REFERRED TO THE LENOVO PURCHASING DEPARTMENT.

PART NO. 42W7622

TITLE MLB-1 SVT

G-SENSOR

LENOVO CONFIDENTIAL

42W7622

	DATE	EC NO.	PART NO.
	20061220	L11403	42W7622
			DEVELOPMENT NO. / Q/M: 73 / 97

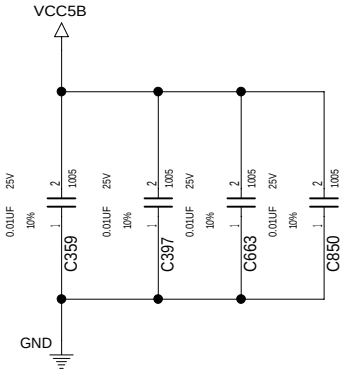

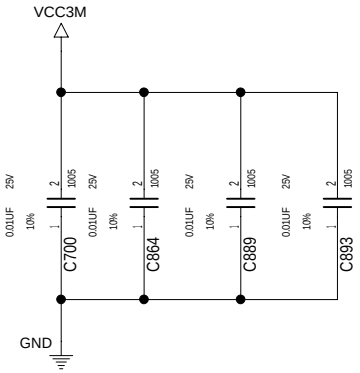

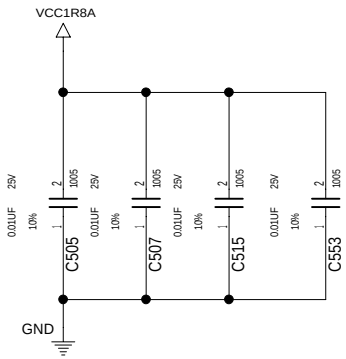

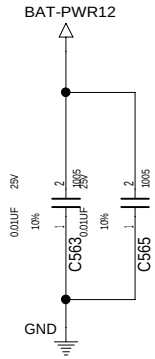

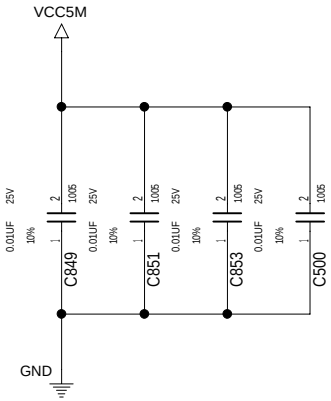

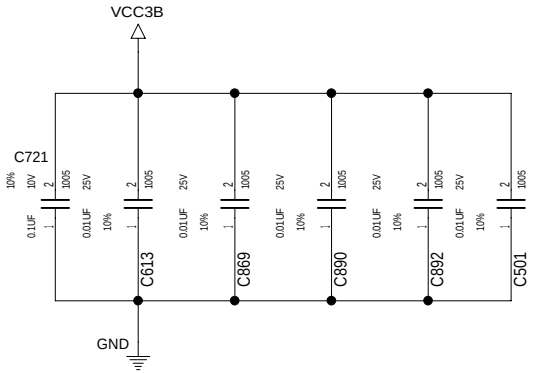

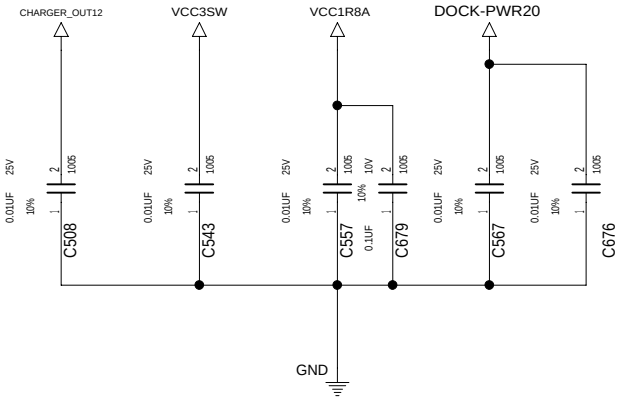

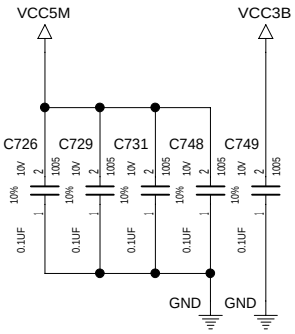

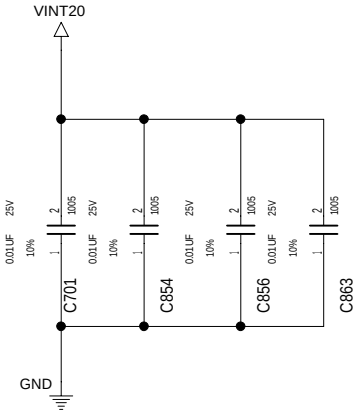

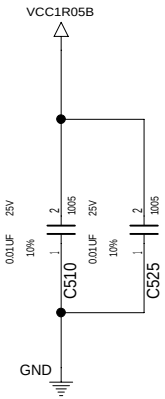

DESIGNER	K.Y	06/01/06	PART NO. 42W7622
CHECKED	Y.I	06/01/06	
APPROVED	T.S	06/01/06	TITLE MLB-1 SVT
CLASS	T.S	06/01/06	EMC DECOUPLING

THIS DOCUMENT IS THE PROPERTY OF LENOVO.ITS USE IS AUTHORIZED ONLY FOR RESPONDING TO A REQUEST FOR QUOTATION OR FOR THE PERFORMANCE OF WORK FOR LENOVO.ALL QUESTIONS MUST BE REFERRED TO THE LENOVO PURCHASING DEPARTMENT.

LENOVO CONFIDENTIAL

	DATE	EC NO.	PART NO. 42W7622
	20061220	L11403	DEVELOPMENT NO. / Q/M 74 / 97

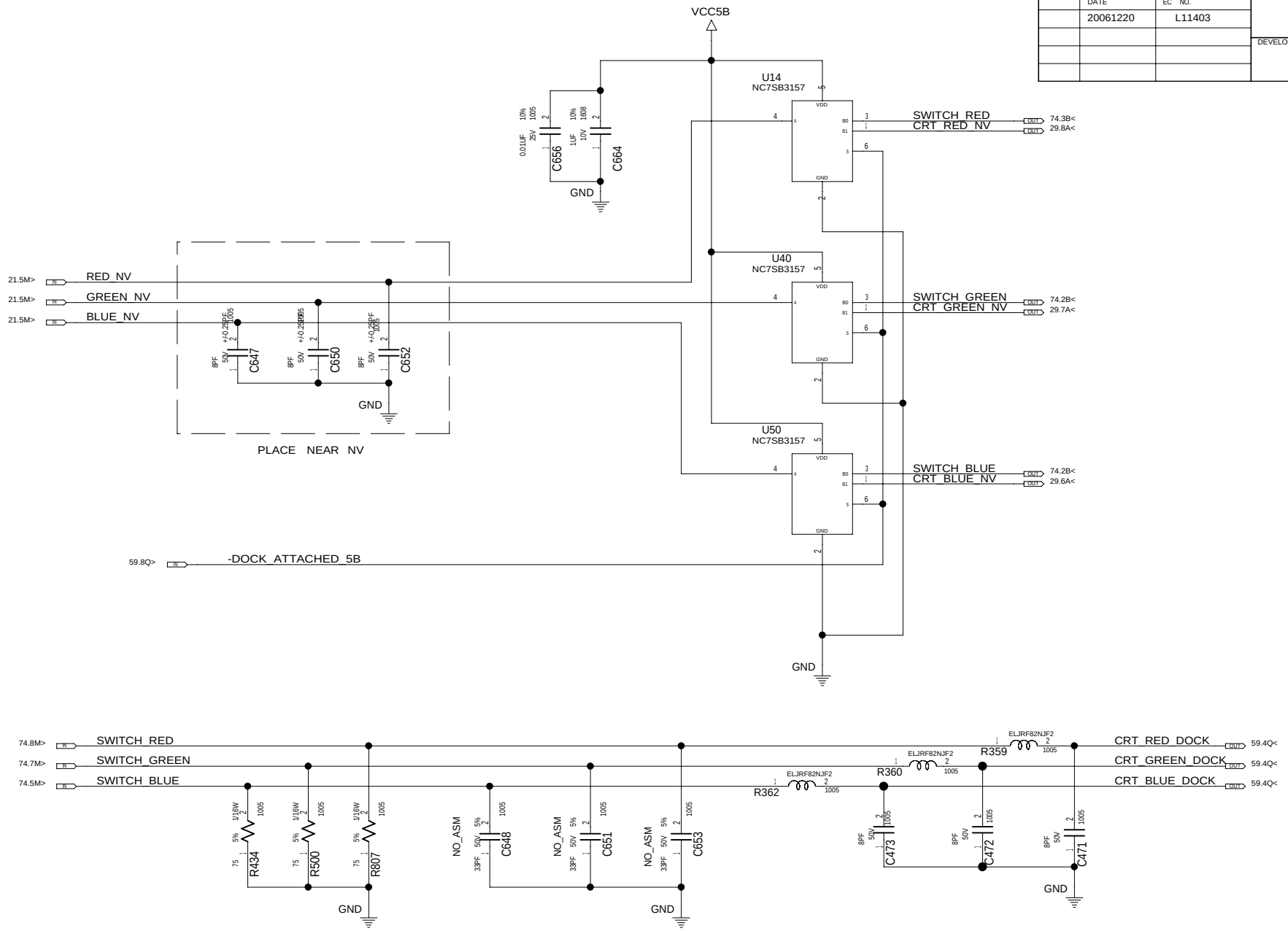

DESIGNER	K.Y	06/01/06
CHECKED	Y.I	06/01/06
APPROVED	T.S	06/01/06
CLASS	T.S	06/01/06

THIS DOCUMENT IS THE PROPERTY OF LENOVO.ITS USE IS AUTHORIZED ONLY FOR RESPONDING TO A REQUEST FOR QUOTATION OR FOR THE PERFORMANCE OF WORK FOR LENOVO.ALL QUESTIONS MUST BE REFERRED TO THE LENOVO PURCHASING DEPARTMENT.

PART NO. 42W7622

TITLE MLB-1 SVT

RGB SWITCH

LENOVO CONFIDENTIAL

42W7622

	DATE	EC NO.	PART NO.
	20061220	L11403	42W7622
			DEVELOPMENT NO. / Q/M: 75 / 97

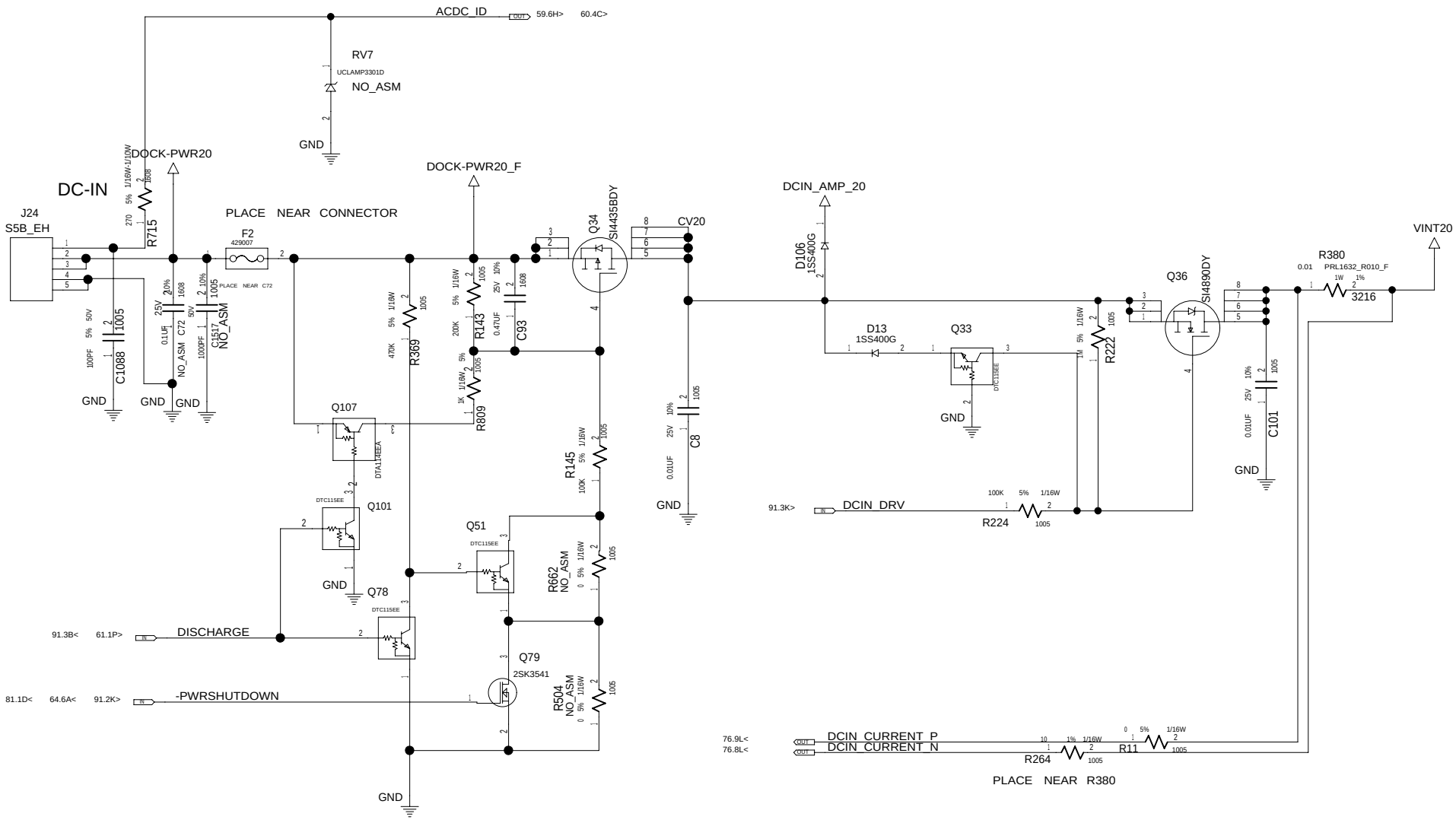

PEAK SHIFT	YES	NO
R662	NO-ASM	ASM
R369	ASM	NO-ASM
Q78	ASM	NO-ASM
Q51	ASM	NO-ASM

DESIGNER	K.Y	06/01/06	PART NO. 42W7622
CHECKED	Y.I	06/01/06	
APPROVED	T.S	06/01/06	TITLE MLB-1 SVT
CLASS	T.S	06/01/06	DC-IN

THIS DOCUMENT IS THE PROPERTY OF LENOVO.ITS USE IS AUTHORIZED ONLY FOR RESPONDING TO A REQUEST FOR QUOTATION OR FOR THE PERFORMANCE OF WORK FOR LENOVO.ALL QUESTIONS MUST BE REFERRED TO THE LENOVO PURCHASING DEPARTMENT.

LENOVO CONFIDENTIAL

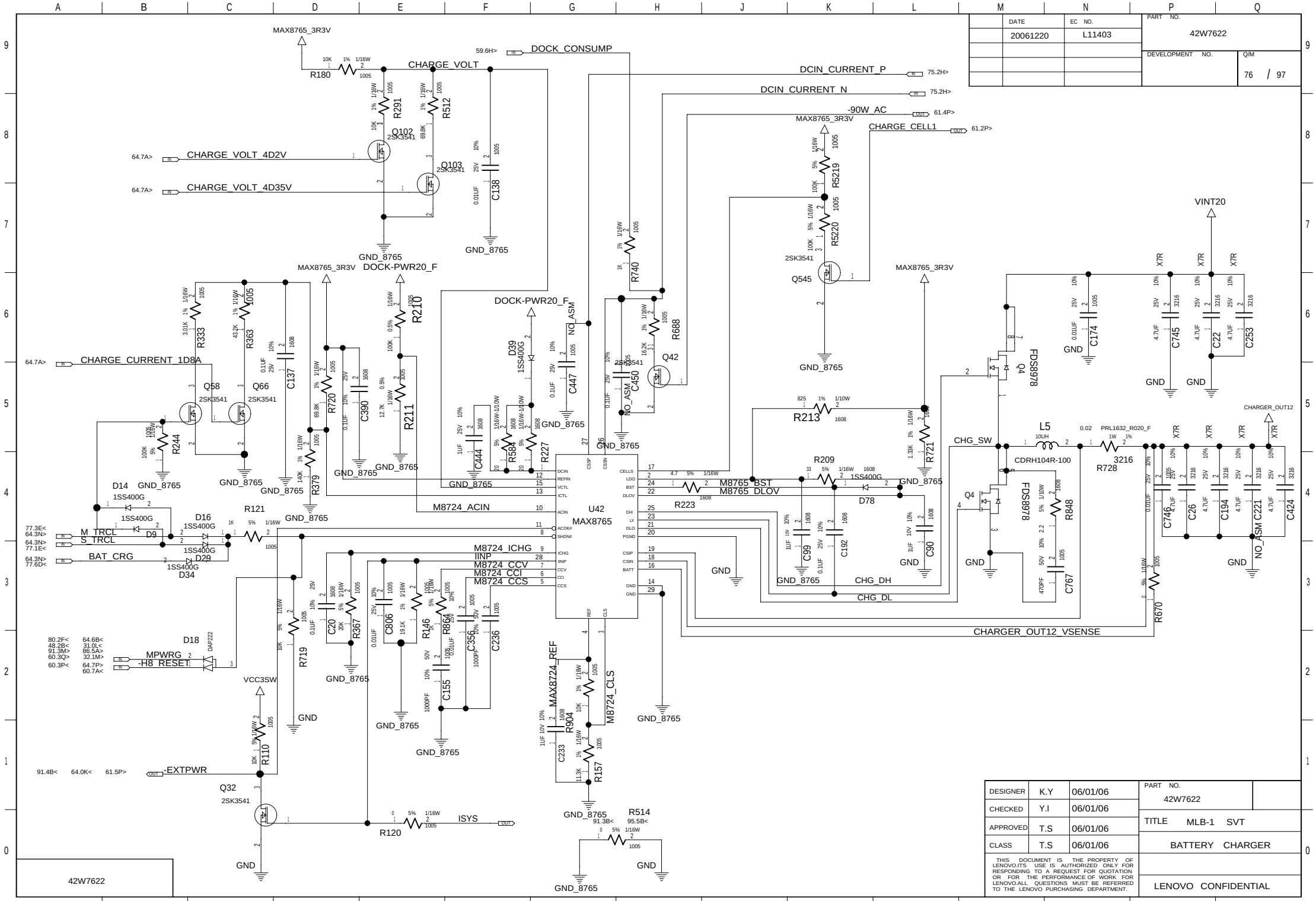
DATE 20061220
EC NO. L11403
PART NO. 42W7622
DEVELOPMENT NO.
Q/M 76 / 97
MAX8765_3R3V
DOCK_CONSUMP
CHARGE_VOLT
DCIN_CURRENT_P
DCIN_CURRENT_N
-90W_AC
CHARGE_CELL1
CHARGE_VOLT_4D2V
CHARGE_VOLT_4D35V
CHARGE_CURRENT_1D8A
DOCK-PWR20_F
VINT20
CHARGER_OUT12
CHG_SW
CHG_DH
CHG_DL
CHARGER_OUT12_VSENSE
M8765_BST
M8765_DLOV
M8724_ACIN
M8724_ICHG
IINP
M8724_CCV
M8724_CCI
M8724_CCS
M_TRCL
S_TRCL
BAT_CRG
MPWRG
-H8_RESET
VCC3SW
-EXTPWR
ISYS
U42
MAX8765
MAX8724_REF
M8724_CLS
GND_8765
GND
42W7622
DESIGNER K.Y 06/01/06
CHECKED Y.I 06/01/06
APPROVED T.S 06/01/06
CLASS T.S 06/01/06
PART NO. 42W7622
TITLE MLB-1 SVT
BATTERY CHARGER
THIS DOCUMENT IS THE PROPERTY OF LENOVO.ITS USE IS AUTHORIZED ONLY FOR RESPONDING TO A REQUEST FOR QUOTATION OR FOR THE PERFORMANCE OF WORK FOR LENOVO.ALL QUESTIONS MUST BE REFERRED TO THE LENOVO PURCHASING DEPARTMENT.
LENOVO CONFIDENTIAL

	DATE	EC NO.	PART NO.
	20061220	L11403	42W7622
			DEVELOPMENT NO. / Q/M: 77 / 97

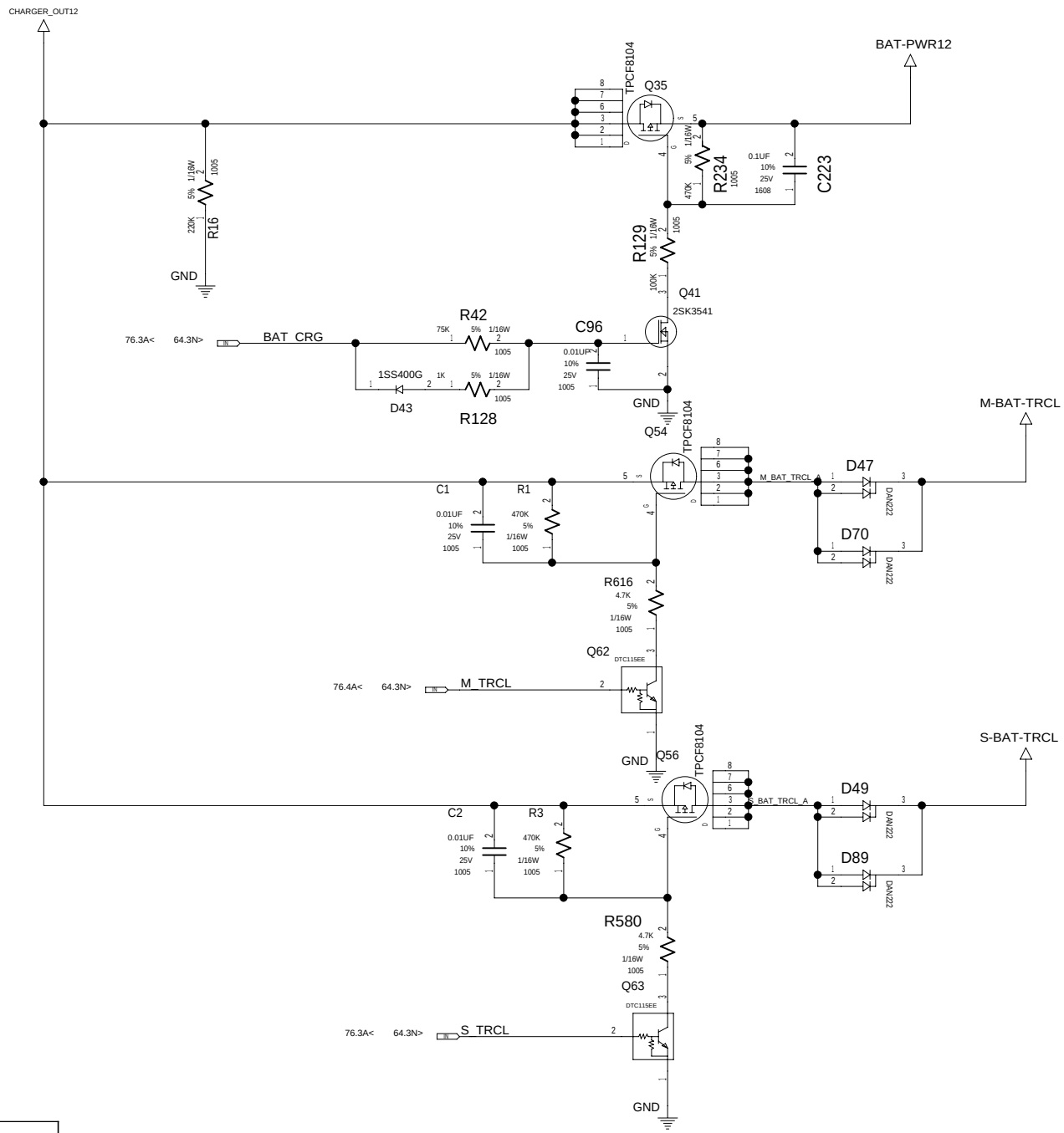

DESIGNER	K.Y	06/01/06
CHECKED	Y.I	06/01/06
APPROVED	T.S	06/01/06
CLASS	T.S	06/01/06

THIS DOCUMENT IS THE PROPERTY OF LENOVO.ITS USE IS AUTHORIZED ONLY FOR RESPONDING TO A REQUEST FOR QUOTATION OR FOR THE PERFORMANCE OF WORK FOR LENOVO.ALL QUESTIONS MUST BE REFERRED TO THE LENOVO PURCHASING DEPARTMENT.

PART NO. 42W7622

TITLE MLB-1 SVT

CHARGE SELECTOR

LENOVO CONFIDENTIAL

42W7622

	DATE	EC NO.	PART NO. 42W7622
	20061220	L11403	DEVELOPMENT NO. / Q/M 78 / 97

MAIN BAT CONN
J13
1827654_1
WIDE PATTERN
M_BAT_IN
M_BAT_PWR_A
I2C_CLK_BT0
I2C_DATA_BT0
M_TEMP
M1_DRV
M2_DRV
R634 NEAR Q8 GATE
SECOND BAT CONN
J17
1827654_1
S_BAT_IN
S_BAT_PWR_A
I2C_CLK_BT1
I2C_DATA_BT1
S_TEMP
S1_DRV
S2_DRV
C1235 NEAR Q13
BAT_DRV
BAT_FET_HOT
PRF15BB471Q
RT16
DOCK-PWR20_F
VREGIN20
M-BAT-TRCL
S-BAT-TRCL

DESIGNER	K.Y	06/01/06
CHECKED	Y.I	06/01/06
APPROVED	T.S	06/01/06
CLASS	T.S	06/01/06

THIS DOCUMENT IS THE PROPERTY OF LENOVO.ITS USE IS AUTHORIZED ONLY FOR RESPONDING TO A REQUEST FOR QUOTATION OR FOR THE PERFORMANCE OF WORK FOR LENOVO.ALL QUESTIONS MUST BE REFERRED TO THE LENOVO PURCHASING DEPARTMENT.

PART NO. 42W7622

TITLE MLB-1 SVT

BATTERY INPUT

LENOVO CONFIDENTIAL

42W7622

	DATE	EC NO.	PART NO. 42W7622
	20061220	L11403	
			DEVELOPMENT NO.
			Q/M 79 / 97

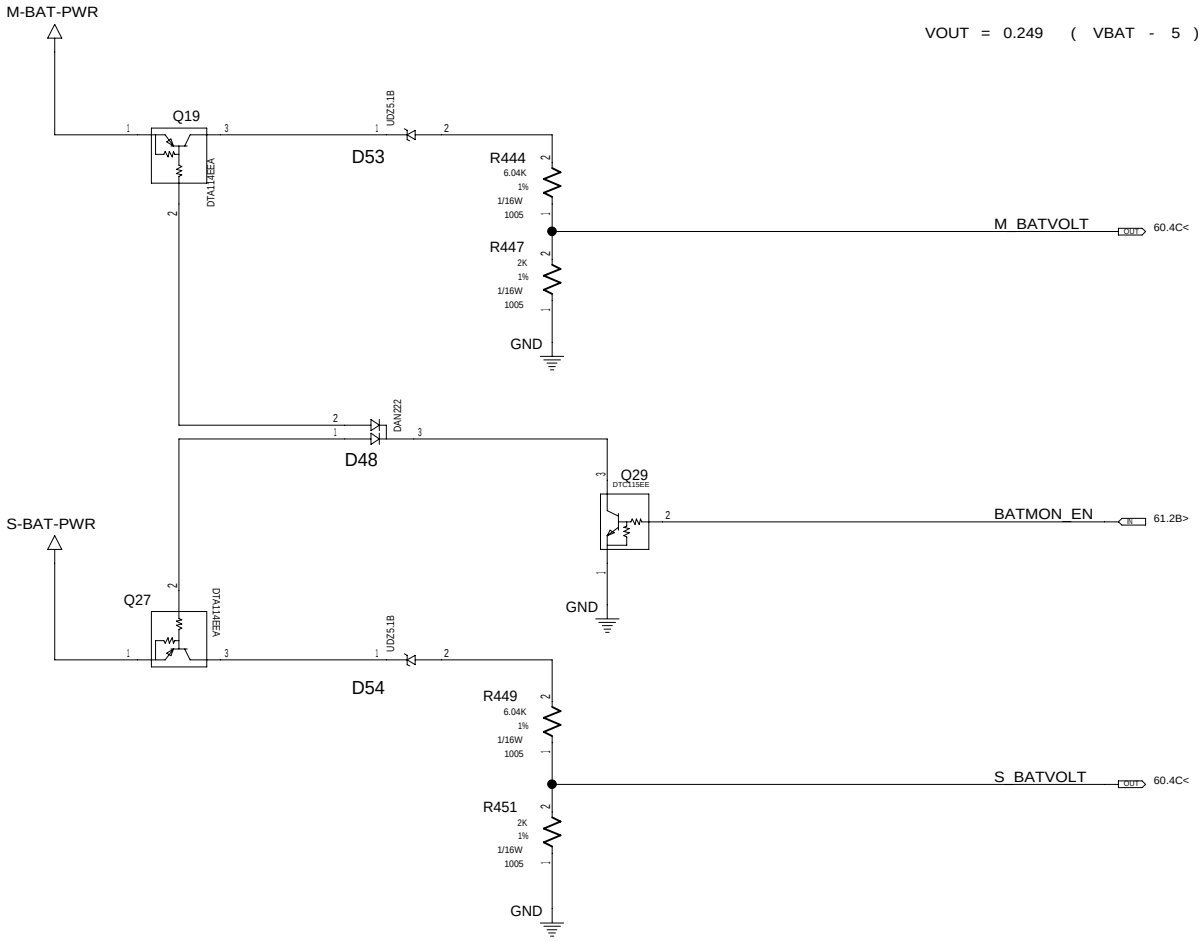

			PART NO. 42W7622	
DESIGNER	K.Y	06/01/06		
CHECKED	Y.I	06/01/06	TITLE MLB-1 SVT	
APPROVED	T.S	06/01/06	BATTERY MONITOR	
CLASS	T.S	06/01/06		

THIS DOCUMENT IS THE PROPERTY OF LENOVO.ITS USE IS AUTHORIZED ONLY FOR RESPONDING TO A REQUEST FOR QUOTATION OR FOR THE PERFORMANCE OF WORK FOR LENOVO.ALL QUESTIONS MUST BE REFERRED TO THE LENOVO PURCHASING DEPARTMENT.

LENOVO CONFIDENTIAL

	DATE	EC NO.	PART NO.
	20061220	L11403	42W7622
			DEVELOPMENT NO. / Q/M: 80 / 97

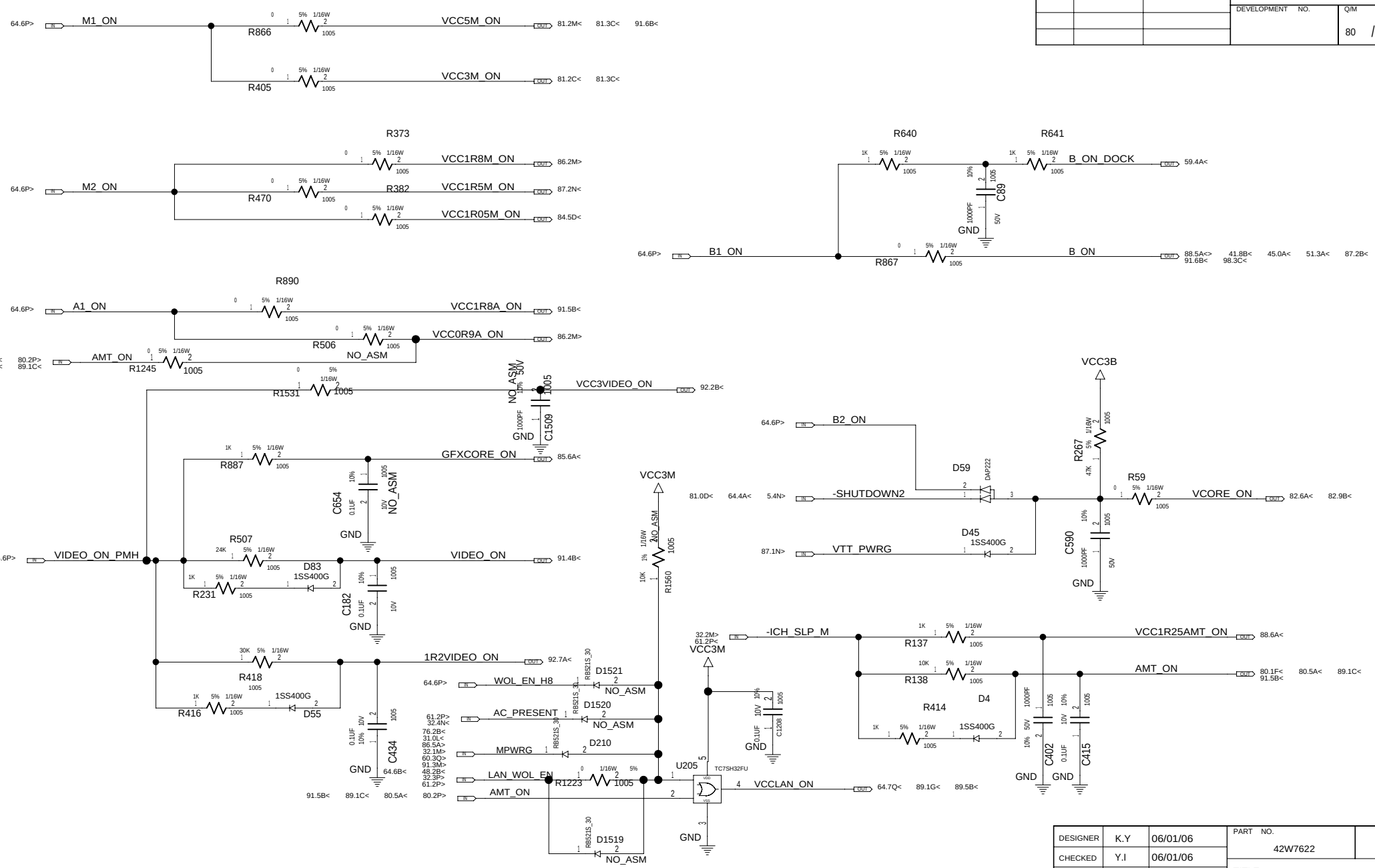

DESIGNER	K.Y	06/01/06
CHECKED	Y.I	06/01/06
APPROVED	T.S	06/01/06
CLASS	T.S	06/01/06

THIS DOCUMENT IS THE PROPERTY OF LENOVO.ITS USE IS AUTHORIZED ONLY FOR RESPONDING TO A REQUEST FOR QUOTATION OR FOR THE PERFORMANCE OF WORK FOR LENOVO.ALL QUESTIONS MUST BE REFERRED TO THE LENOVO PURCHASING DEPARTMENT.

PART NO. 42W7622

TITLE MLB-1 SVT

POWER SEQUENCE

LENOVO CONFIDENTIAL

42W7622

	DATE	EC NO.	PART NO.
	20061220	L11403	42W7622
			DEVELOPMENT NO. / Q/M
			81 / 97

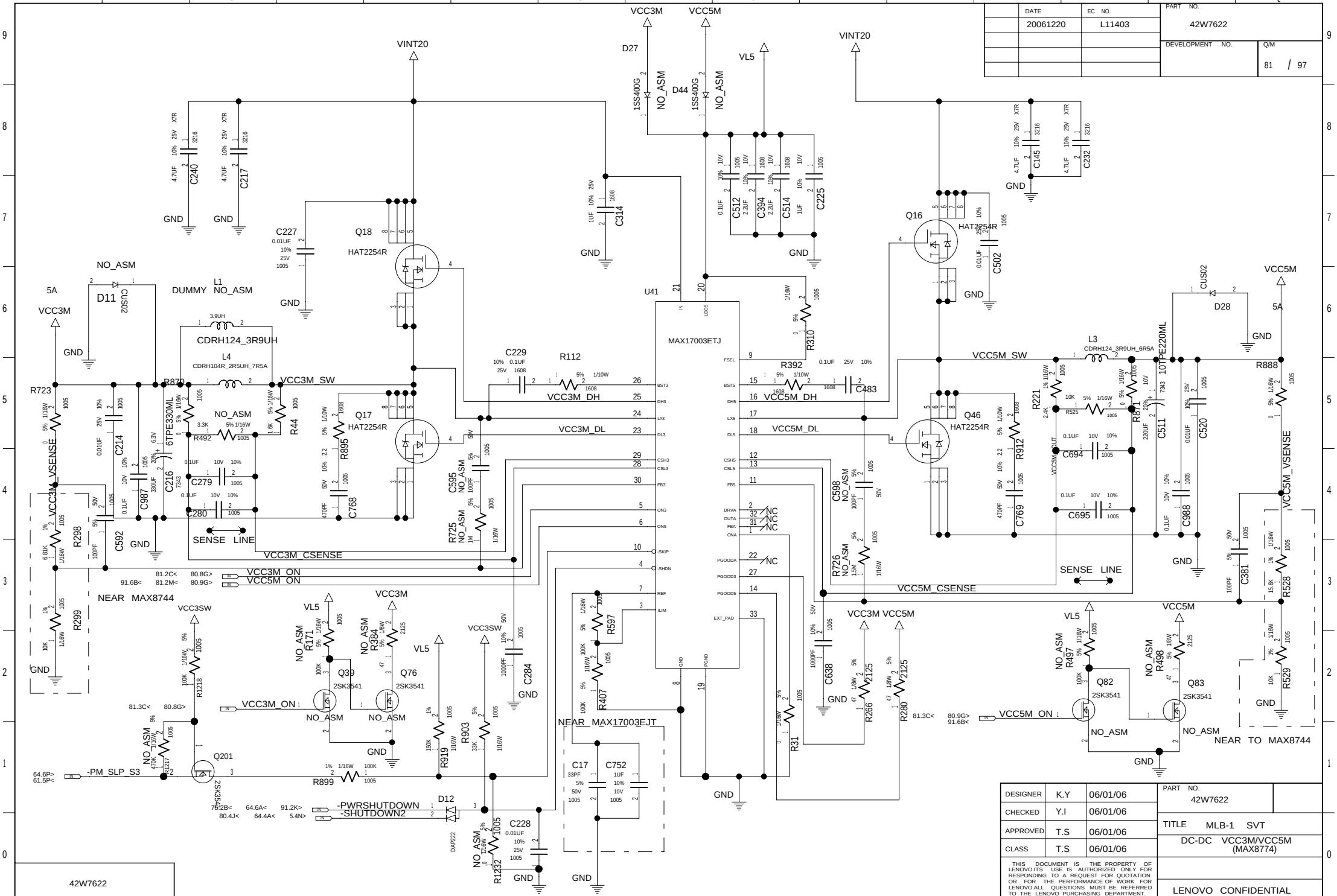

DESIGNER	K.Y	06/01/06
CHECKED	Y.I	06/01/06
APPROVED	T.S	06/01/06
CLASS	T.S	06/01/06

THIS DOCUMENT IS THE PROPERTY OF LENOVO.ITS USE IS AUTHORIZED ONLY FOR RESPONDING TO A REQUEST FOR QUOTATION OR FOR THE PERFORMANCE OF WORK FOR LENOVO.ALL QUESTIONS MUST BE REFERRED TO THE LENOVO PURCHASING DEPARTMENT.

PART NO. 42W7622

TITLE MLB-1 SVT

DC-DC VCC3M/VCC5M (MAX8774)

LENOVO CONFIDENTIAL

42W7622

	DATE	EC NO.	PART NO.
	20061220	L11403	42W7622
			DEVELOPMENT NO. / Q/M
			82 / 97

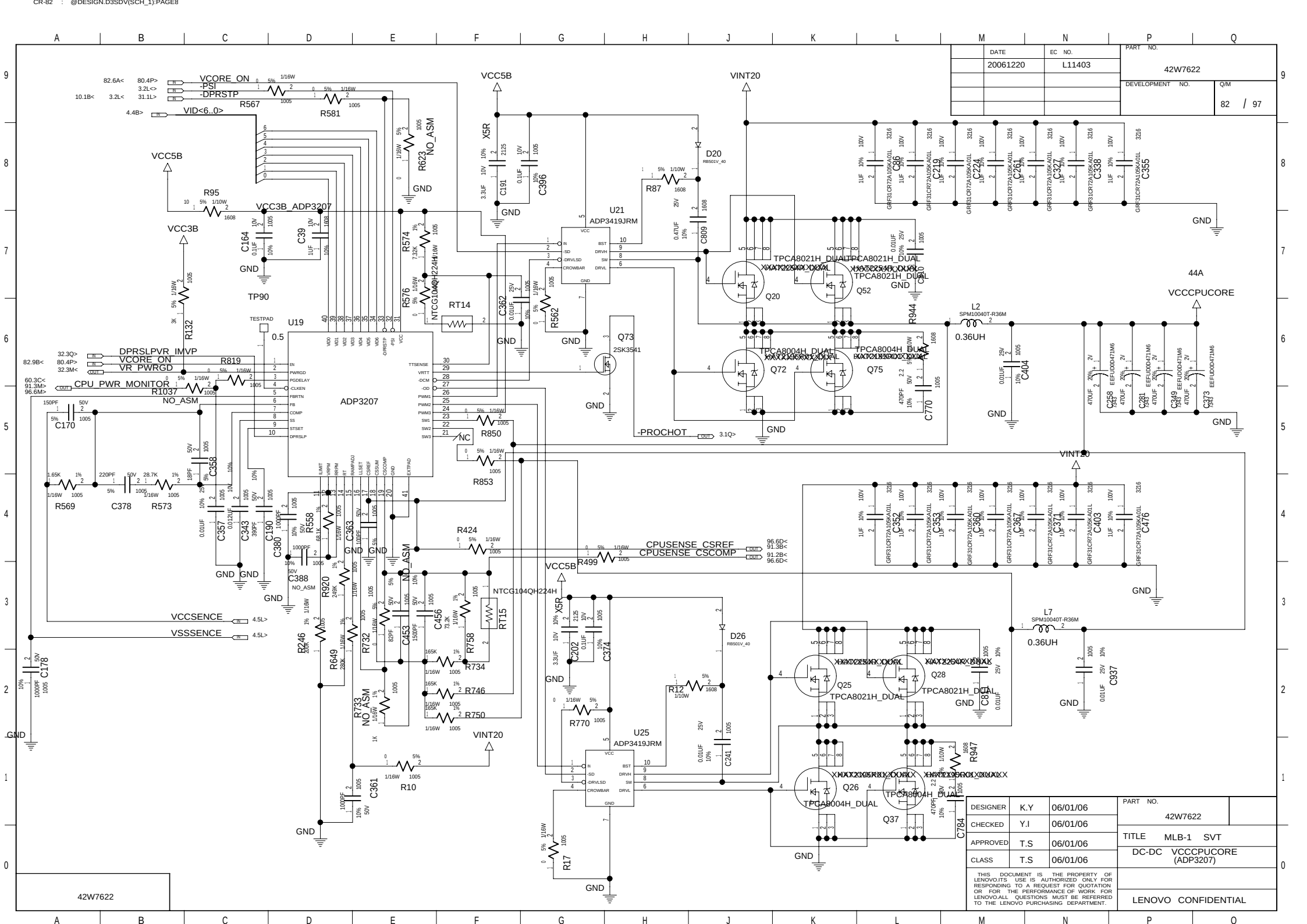
VCORE_ON
-PSI
-DPRSTP
VID<6..0>
R567
R581
R623
NO_ASM
VCC5B
VCC3B
VCC3B_ADP3207
R95
C164
C39
TP90
R574
R576
NTCG104QH224H
RT14
C362
R562
R132
TESTPAD
U19
ADP3207
DPRSLPVR_IMVP
VCORE_ON
VR_PWRGD
CPU_PWR_MONITOR
R819
R1037
C170
C358
C357
C343
C190
C380
C388
R569
C378
R573
R558
R920
R246
R649
R732
R733
C363
C453
C456
R758
R734
R746
R750
R10
C361
R424
R499
CPUSENSE_CSREF
CPUSENSE_CSCOMP
R850
R853
NC
-PROCHOT
3.1Q>
VCCSENCE
VSSSENCE
4.5L>
C178
GND
VINT20
U21
ADP3419JRM
D20
RB501V_40
R87
C809
Q20
Q52
Q73
2SK3541
Q72
Q75
TPCA8021H_DUAL
TPCA8004H_DUAL
R944
L2
SPM10040T-R36M
0.36UH
C404
C770
44A
VCCCPUCORE
C258
C281
C349
C373
EEFUD0D471M6
C396
C191
C219
C224
C261
C327
C338
C355
C809
C810
C353
C360
C367
C371
C403
C476
U25
D26
Q25
Q28
Q26
Q37
R12
R770
R17
R947
C784
C937
C241
C374
C202
C456
R1
R2
R3
R4
R5
R6
R7
R8
R9
R11
R13
R14
R15
R16
R18
R19
R20
R21
R22
R23
R24
R25
R26
R27
R28
R29
R30
R31
R32
R33
R34
R35
R36
R37
R38
R39
R40
R41
R42
R43
R44
R45
R46
R47
R48
R49
R50
R51
R52
R53
R54
R55
R56
R57
R58
R59
R60
R61
R62
R63
R64
R65
R66
R67
R68
R69
R70
R71
R72
R73
R74
R75
R76
R77
R78
R79
R80
R81
R82
R83
R84
R85
R86
R88
R89
R90
R91
R92
R93
R94
R96
R97
R98
R99
R100
R101
R102
R103
R104
R105
R106
R107
R108
R109
R110
R111
R112
R113
R114
R115
R116
R117
R118
R119
R120
R121
R122
R123
R124
R125
R126
R127
R128
R129
R130
R131
R133
R134
R135
R136

	DATE	EC NO.	PART NO.
	20061220	L11403	42W7622
			DEVELOPMENT NO.
			Q/M 83 / 97

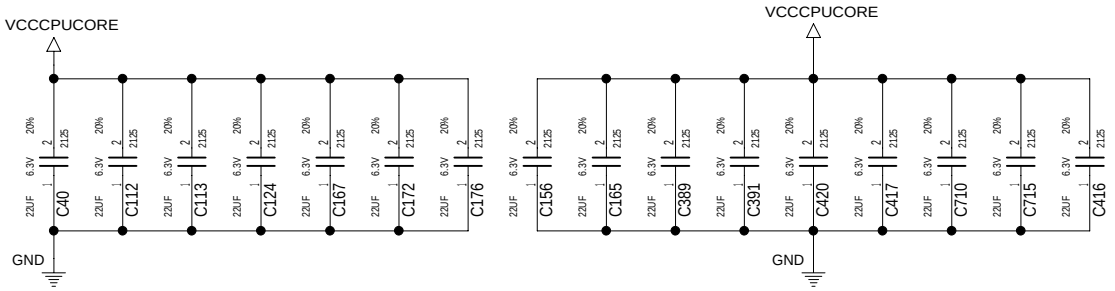

22UF 6.3V X5R 2125 1/16W X 16PCS

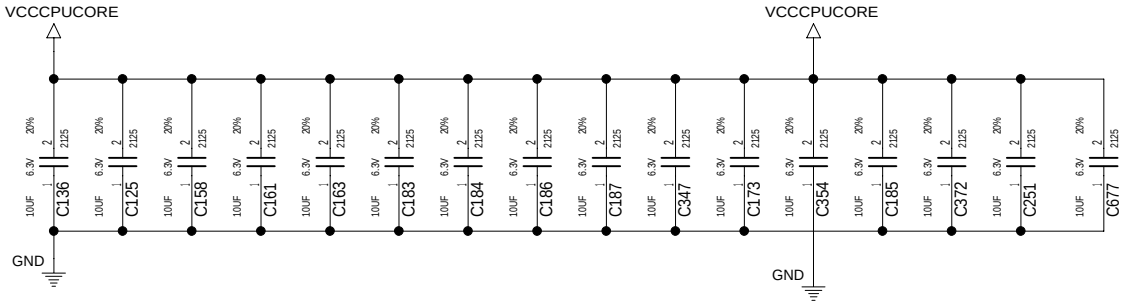

10UF 6.3V X5R 2125 1/16W X 16PCS

DESIGNER	K.Y	06/01/06
CHECKED	Y.I	06/01/06
APPROVED	T.S	06/01/06
CLASS	T.S	06/01/06

THIS DOCUMENT IS THE PROPERTY OF LENOVO.ITS USE IS AUTHORIZED ONLY FOR RESPONDING TO A REQUEST FOR QUOTATION OR FOR THE PERFORMANCE OF WORK FOR LENOVO.ALL QUESTIONS MUST BE REFERRED TO THE LENOVO PURCHASING DEPARTMENT.

PART NO. 42W7622

TITLE MLB-1 SVT

VCCCPUCORE DECOUPLING

LENOVO CONFIDENTIAL

	DATE	EC NO.	PART NO.
	20061220	L11403	42W7622
			DEVELOPMENT NO. / Q/M: 84 / 97

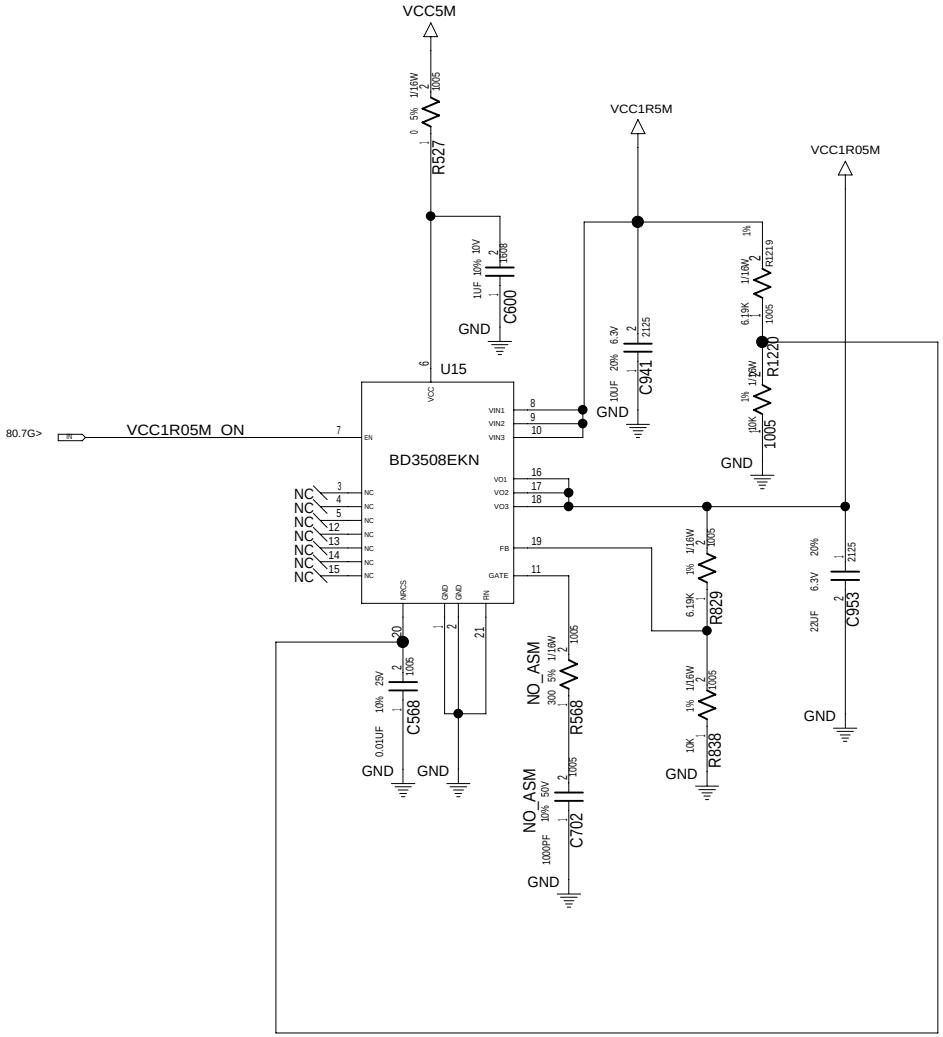

DESIGNER	K.Y	06/01/06
CHECKED	Y.I	06/01/06
APPROVED	T.S	06/01/06
CLASS	T.S	06/01/06

THIS DOCUMENT IS THE PROPERTY OF LENOVO.ITS USE IS AUTHORIZED ONLY FOR RESPONDING TO A REQUEST FOR QUOTATION OR FOR THE PERFORMANCE OF WORK FOR LENOVO.ALL QUESTIONS MUST BE REFERRED TO THE LENOVO PURCHASING DEPARTMENT.

PART NO. 42W7622

TITLE MLB-1 SVT

DC-DC VCC1R05M

LENOVO CONFIDENTIAL

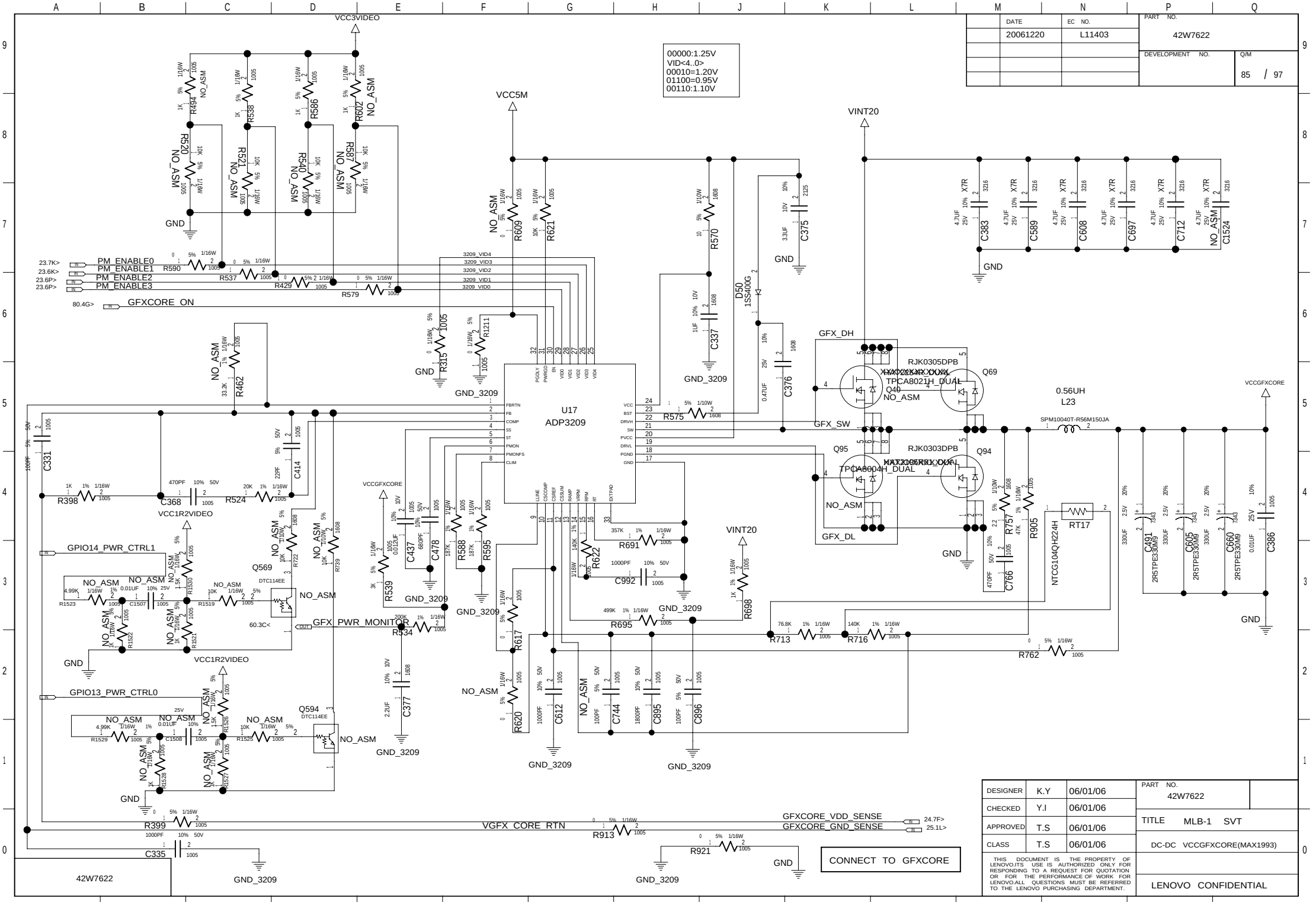

	DATE	EC NO.
	20061220	L11403

PART NO. 42W7622

DEVELOPMENT NO.

Q/M 85 / 97

DESIGNER	K.Y	06/01/06
CHECKED	Y.I	06/01/06
APPROVED	T.S	06/01/06
CLASS	T.S	06/01/06

PART NO. 42W7622

TITLE MLB-1 SVT

DC-DC VCCGFXCORE(MAX1993)

THIS DOCUMENT IS THE PROPERTY OF LENOVO.ITS USE IS AUTHORIZED ONLY FOR RESPONDING TO A REQUEST FOR QUOTATION OR FOR THE PERFORMANCE OF WORK FOR LENOVO.ALL QUESTIONS MUST BE REFERRED TO THE LENOVO PURCHASING DEPARTMENT.

LENOVO CONFIDENTIAL

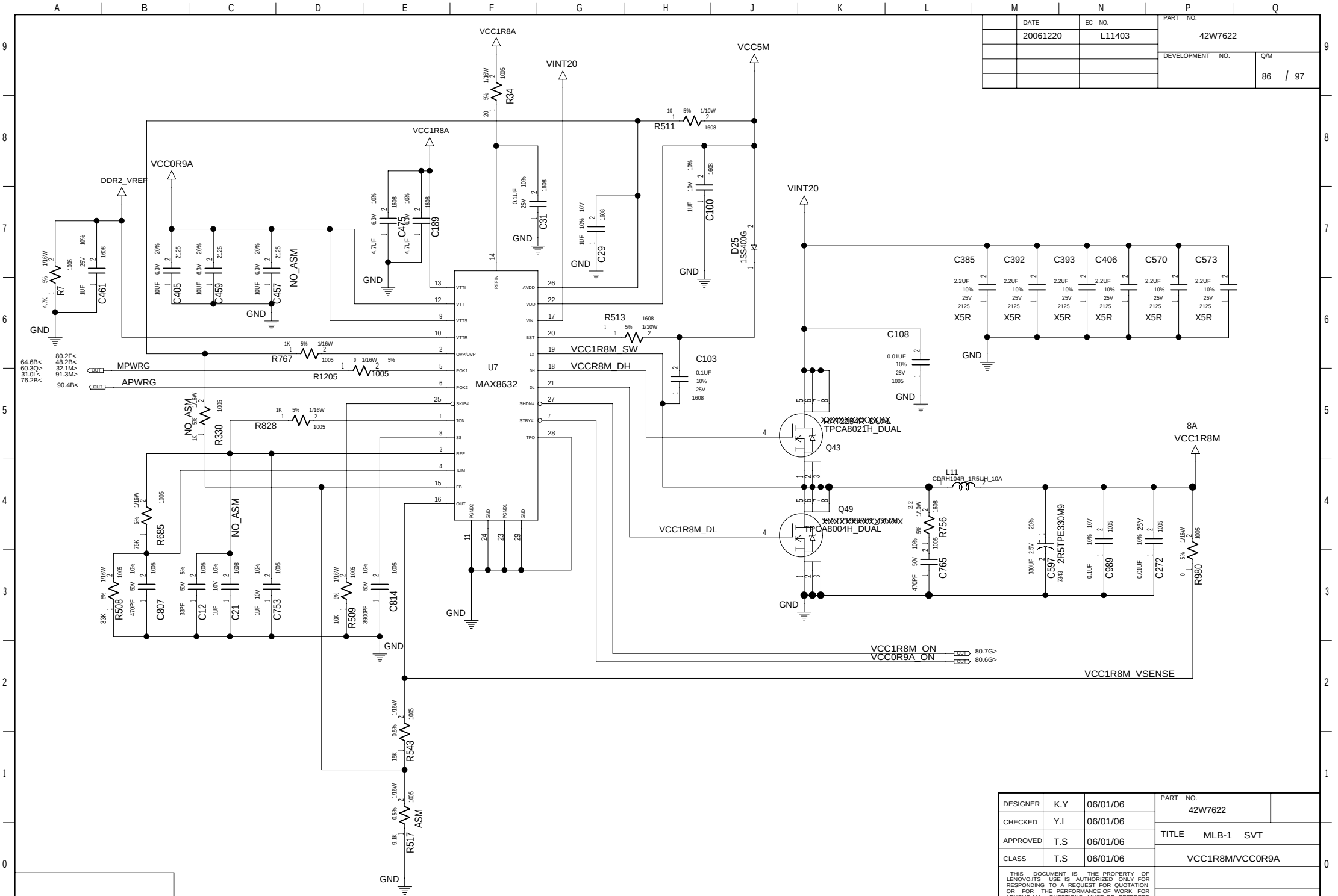

	DATE	EC NO.	PART NO.
	20061220	L11403	42W7622
			DEVELOPMENT NO.
			Q/M 86 / 97

			PART NO. 42W7622
DESIGNER	K.Y	06/01/06	
CHECKED	Y.I	06/01/06	TITLE MLB-1 SVT
APPROVED	T.S	06/01/06	VCC1R8M/VCC0R9A
CLASS	T.S	06/01/06	

THIS DOCUMENT IS THE PROPERTY OF LENOVO.ITS USE IS AUTHORIZED ONLY FOR RESPONDING TO A REQUEST FOR QUOTATION OR FOR THE PERFORMANCE OF WORK FOR LENOVO.ALL QUESTIONS MUST BE REFERRED TO THE LENOVO PURCHASING DEPARTMENT.

LENOVO CONFIDENTIAL

42W7622

	DATE	EC NO.	PART NO.
	20061220	L11403	42W7622
			DEVELOPMENT NO.
			Q/M 87 / 97

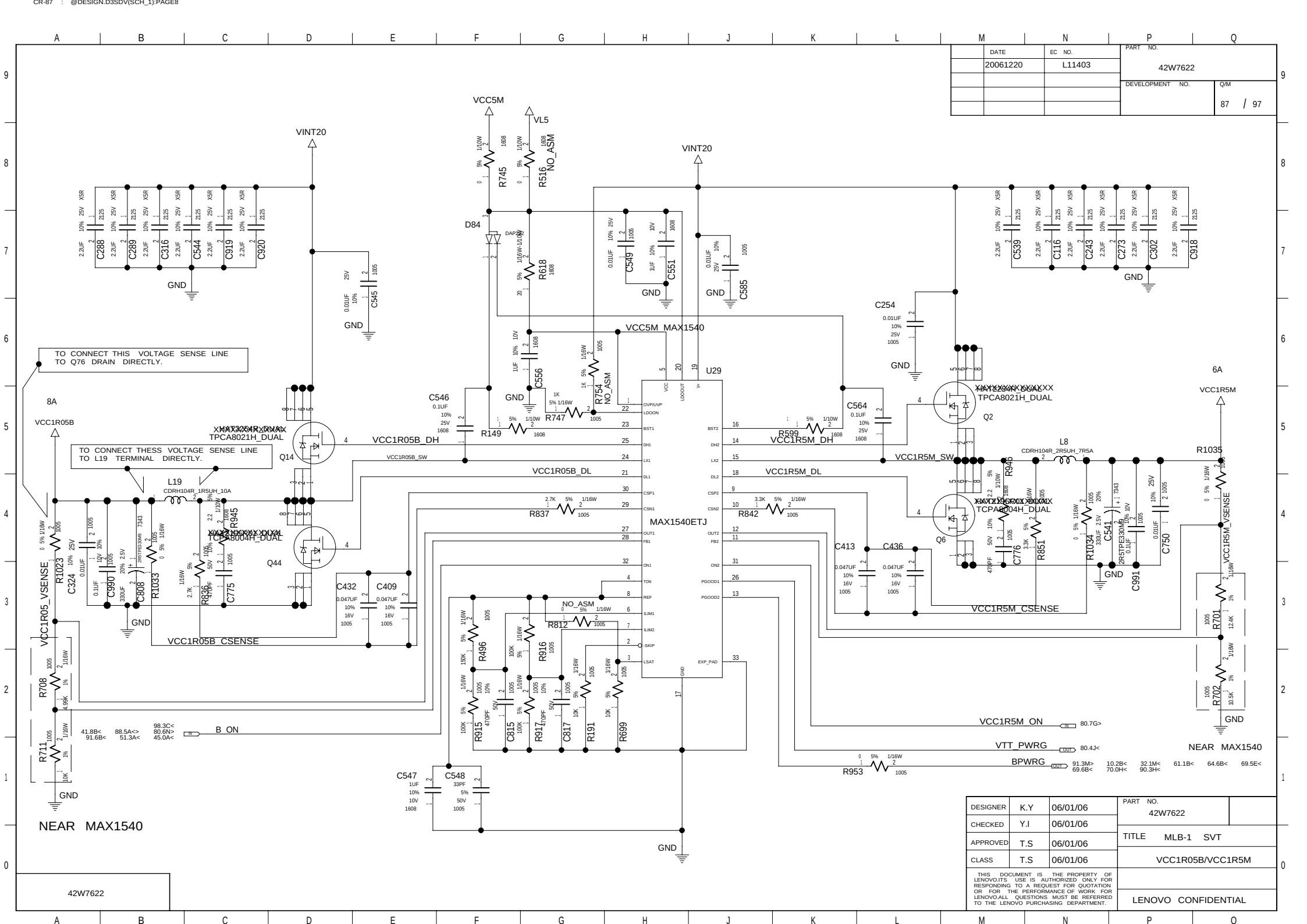

DESIGNER	K.Y	06/01/06
CHECKED	Y.I	06/01/06
APPROVED	T.S	06/01/06
CLASS	T.S	06/01/06

THIS DOCUMENT IS THE PROPERTY OF LENOVO.ITS USE IS AUTHORIZED ONLY FOR RESPONDING TO A REQUEST FOR QUOTATION OR FOR THE PERFORMANCE OF WORK FOR LENOVO.ALL QUESTIONS MUST BE REFERRED TO THE LENOVO PURCHASING DEPARTMENT.

PART NO. 42W7622

TITLE MLB-1 SVT

VCC1R05B/VCC1R5M

LENOVO CONFIDENTIAL

42W7622

	DATE	EC NO.	PART NO.
	20061220	L11403	42W7622
			DEVELOPMENT NO. / Q/M: 88 / 97

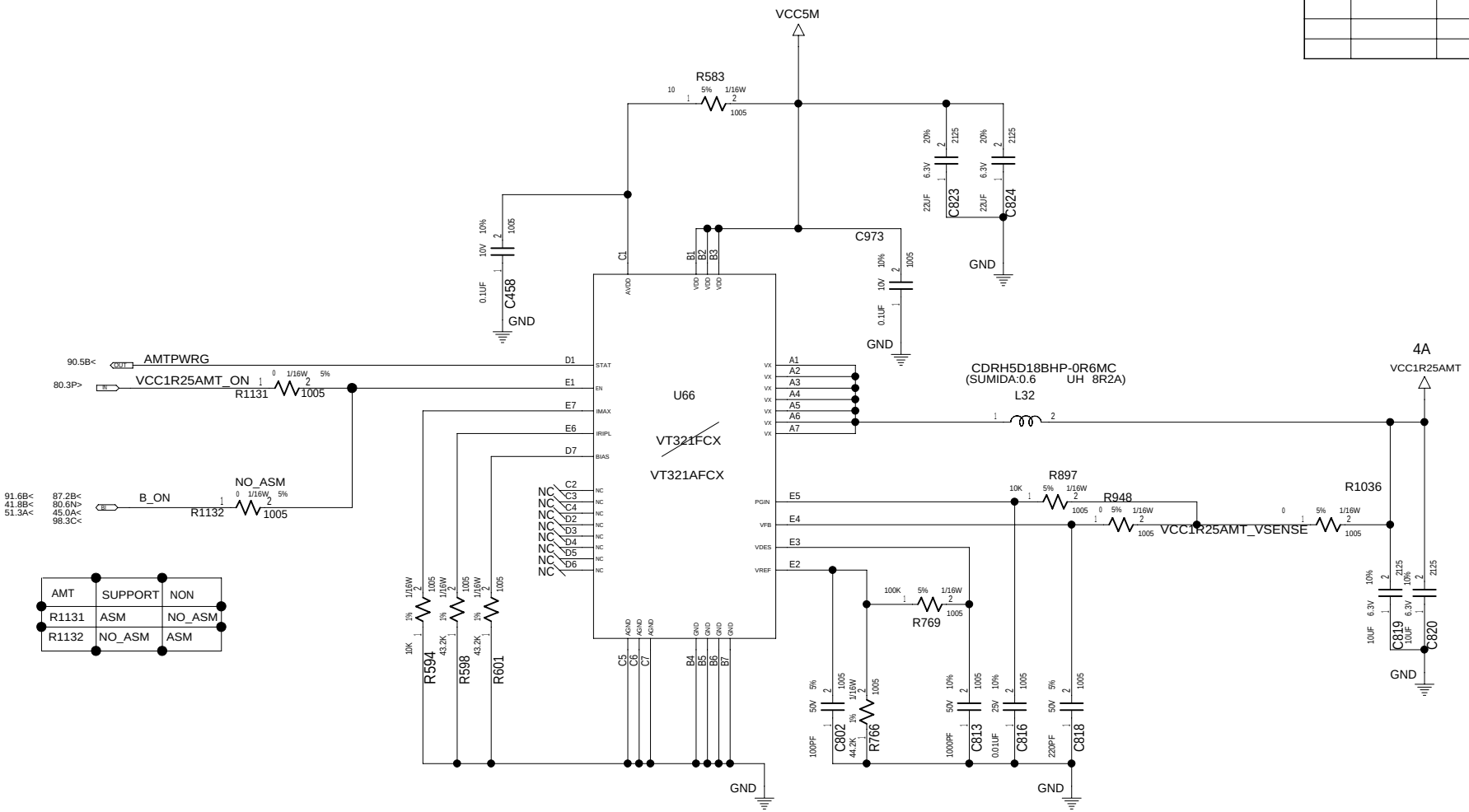

AMT	SUPPORT	NON
R1131	ASM	NO_ASM
R1132	NO_ASM	ASM

DESIGNER	K.Y	06/01/06
CHECKED	Y.I	06/01/06
APPROVED	T.S	06/01/06
CLASS	T.S	06/01/06

THIS DOCUMENT IS THE PROPERTY OF LENOVO.ITS USE IS AUTHORIZED ONLY FOR RESPONDING TO A REQUEST FOR QUOTATION OR FOR THE PERFORMANCE OF WORK FOR LENOVO.ALL QUESTIONS MUST BE REFERRED TO THE LENOVO PURCHASING DEPARTMENT.

PART NO. 42W7622

TITLE MLB-1 SVT

DC-DC VC1R25AMT

LENOVO CONFIDENTIAL

42W7622

	DATE	EC NO.	PART NO.
	20061220	L11403	42W7622
			DEVELOPMENT NO. / Q/M: 89 / 97

VCC3LAN

R1226 1/16W 5% 1005

U206 BU4230FVE

IC LOW VOLTAGE DETECT 3V VSOF5

R1227 100K 1/16W 5% 1005

C1212 0.1UF 10% 10V 1005

C1213 330PF 5% 50V 1005

LANPWRG → 31.0L<

GND

89.1G< 64.7Q< 80.1K>

VCCLAN_ON

D98 1SS400

VCC3AMT — YJP1608-R001 1MILLI-OHM10A 1608 — VCC3B

R1133 NO_ASM 1608

AMT	SUPPORT	NON
R1133	NO_ASM	ASM
R1134	NO_ASM	ASM
THE OTHER	ASM	NO_ASM

VCC1R05B

VCC1R05M

VCC1R05AMT

R1134 NO_ASM YJP1608-R001 1608 1MILLI-OHM 10A

Q80 TPCF8001

R481 1/16W 5% 1005

R482 1/16W 5% 1005

D60 RB521S-30

C516 AND R481 SHOULD BE NEAR Q80 IN LAYOUT

91.5K> AMT_DRV

C516 0.022UF 10% 25V 1005

C421 0.022UF 10% 25V 1005

R152 470K 1/16W 5% 1005

GND

AMT	SUPPORT	NON
	ASM	NO_ASM

LOGIC

VCC3M

VCC3AMT

Q206 TPCF8104

C1211 0.047UF 10% 16V 1005

R1225 100K 1/16W 5% 1005

R1230 10K 1/16W 5% 1005

R1229 10K 1/16W 5% 1005

91.5B< 80.5A< 80.1F< 80.2P>

AMT_ON

Q203 DTC115EE

GND

VCC3M

VCC3LAN

Q209 TPCF8104

C482 0.1UF 10% 10V 1005

R1242 100K 1/16W 5% 1005

R1244 10K 1/16W 5% 1005

R1243 10K 1/16W 5% 1005

89.5B< 64.7Q< 80.1K>

VCCLAN_ON

Q208 DTC115EE

GND

			PART NO.
DESIGNER	K.Y	06/01/06	42W7622
CHECKED	Y.I	06/01/06	TITLE MLB-1 SVT
APPROVED	T.S	06/01/06	LOAD SW AMT
CLASS	T.S	06/01/06	

THIS DOCUMENT IS THE PROPERTY OF LENOVO.ITS USE IS AUTHORIZED ONLY FOR RESPONDING TO A REQUEST FOR QUOTATION OR FOR THE PERFORMANCE OF WORK FOR LENOVO.ALL QUESTIONS MUST BE REFERRED TO THE LENOVO PURCHASING DEPARTMENT.

LENOVO CONFIDENTIAL

42W7622

	DATE	EC NO.	PART NO.
	20061220	L11403	42W7622
			DEVELOPMENT NO. / Q/M: 90 / 97

	AMT	NON-AMT
R1051	NO_ASM	ASM
OTHERS	ASM	NO_ASM

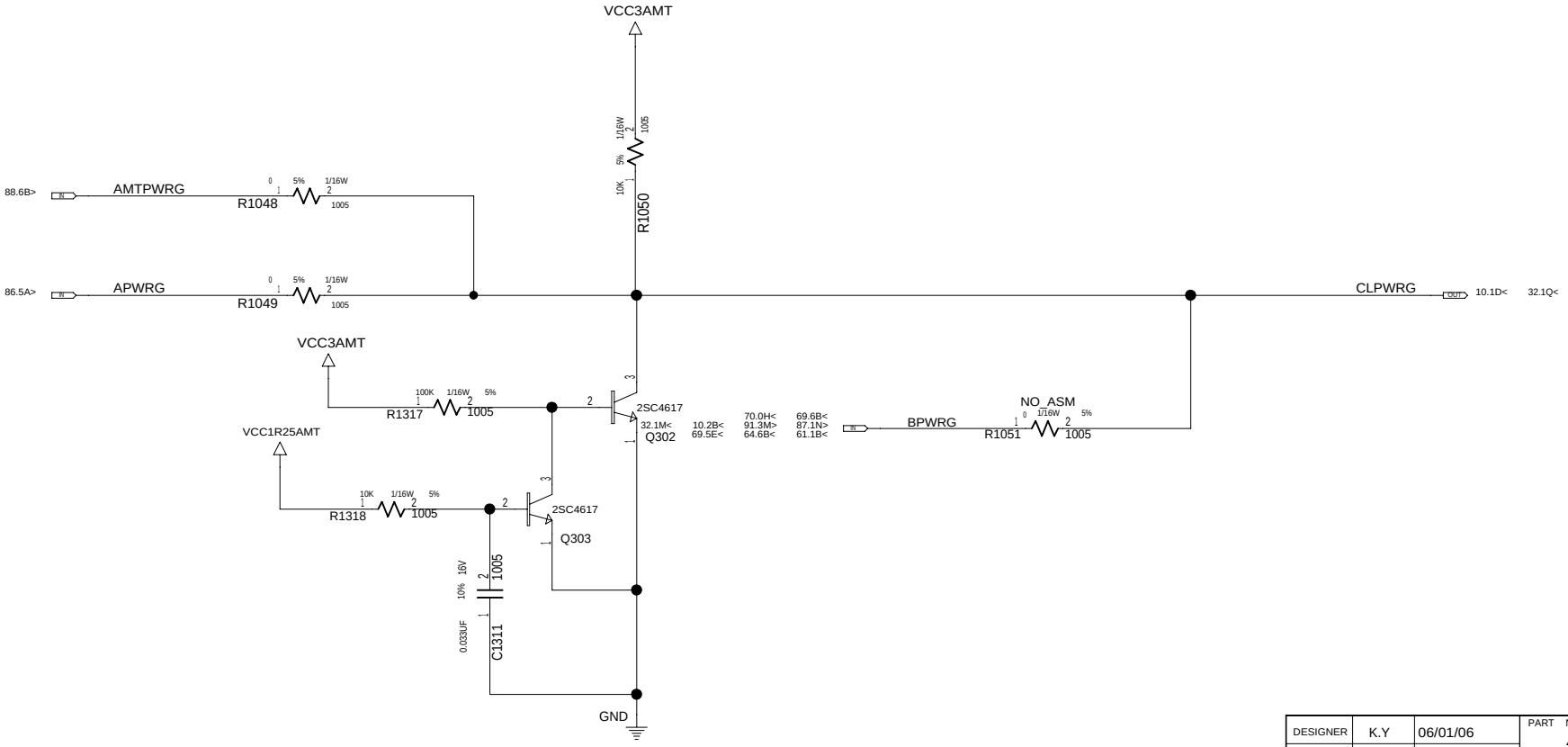

DESIGNER	K.Y	06/01/06	PART NO. 42W7622
CHECKED	Y.I	06/01/06	
APPROVED	T.S	06/01/06	TITLE MLB-1 SVT
CLASS	T.S	06/01/06	PWRG

THIS DOCUMENT IS THE PROPERTY OF LENOVO.ITS USE IS AUTHORIZED ONLY FOR RESPONDING TO A REQUEST FOR QUOTATION OR FOR THE PERFORMANCE OF WORK FOR LENOVO.ALL QUESTIONS MUST BE REFERRED TO THE LENOVO PURCHASING DEPARTMENT.

LENOVO CONFIDENTIAL

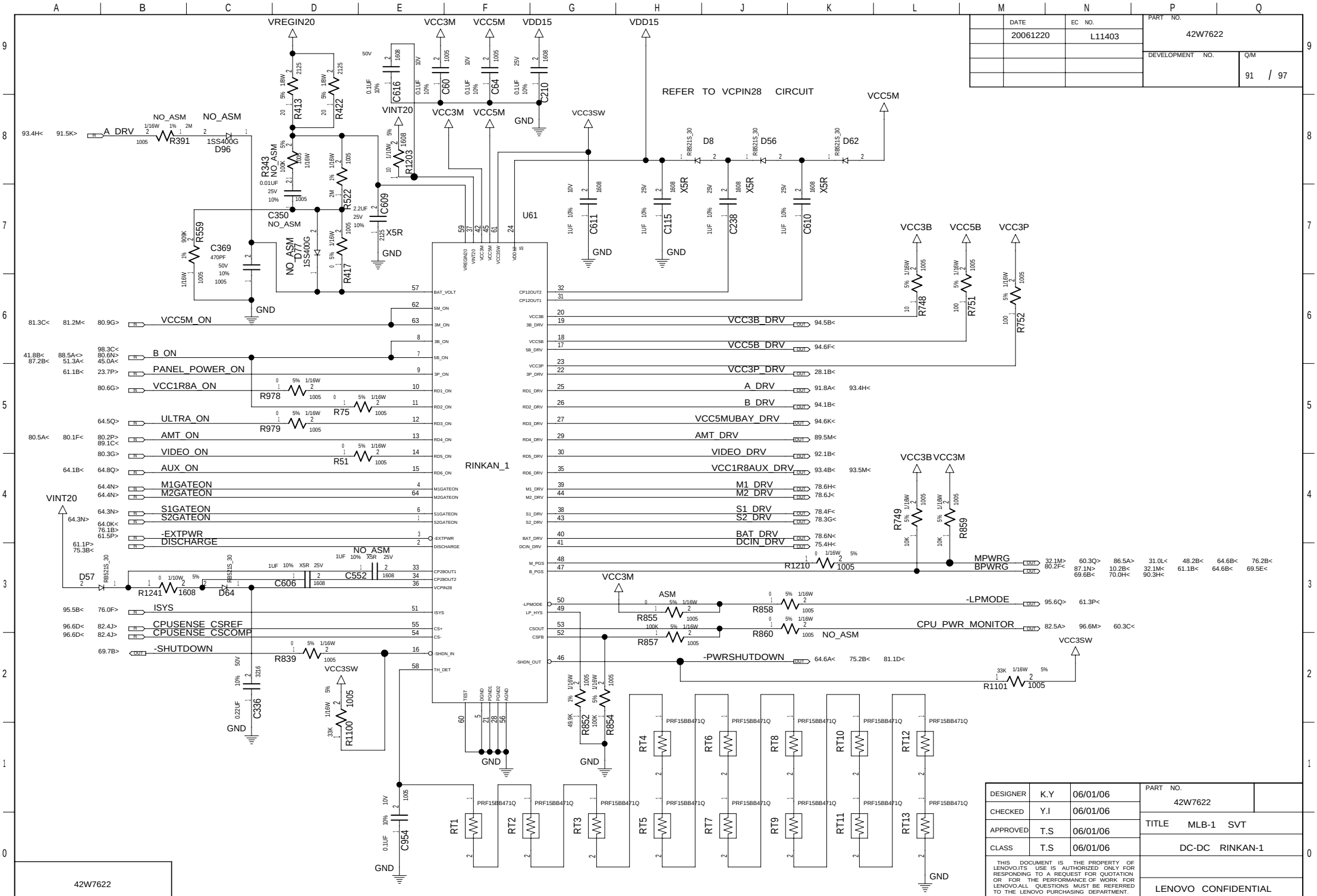

	DATE	EC NO.	PART NO.
	20061220	L11403	42W7622
			DEVELOPMENT NO.
			Q/M 91 / 97

DESIGNER	K.Y	06/01/06
CHECKED	Y.I	06/01/06
APPROVED	T.S	06/01/06
CLASS	T.S	06/01/06

THIS DOCUMENT IS THE PROPERTY OF LENOVO.ITS USE IS AUTHORIZED ONLY FOR RESPONDING TO A REQUEST FOR QUOTATION OR FOR THE PERFORMANCE OF WORK FOR LENOVO.ALL QUESTIONS MUST BE REFERRED TO THE LENOVO PURCHASING DEPARTMENT.

PART NO. 42W7622

TITLE MLB-1 SVT

DC-DC RINKAN-1

LENOVO CONFIDENTIAL

42W7622

	DATE	EC NO.	PART NO. 42W7622
	20061220	L11403	DEVELOPMENT NO. / Q/M 92 / 97

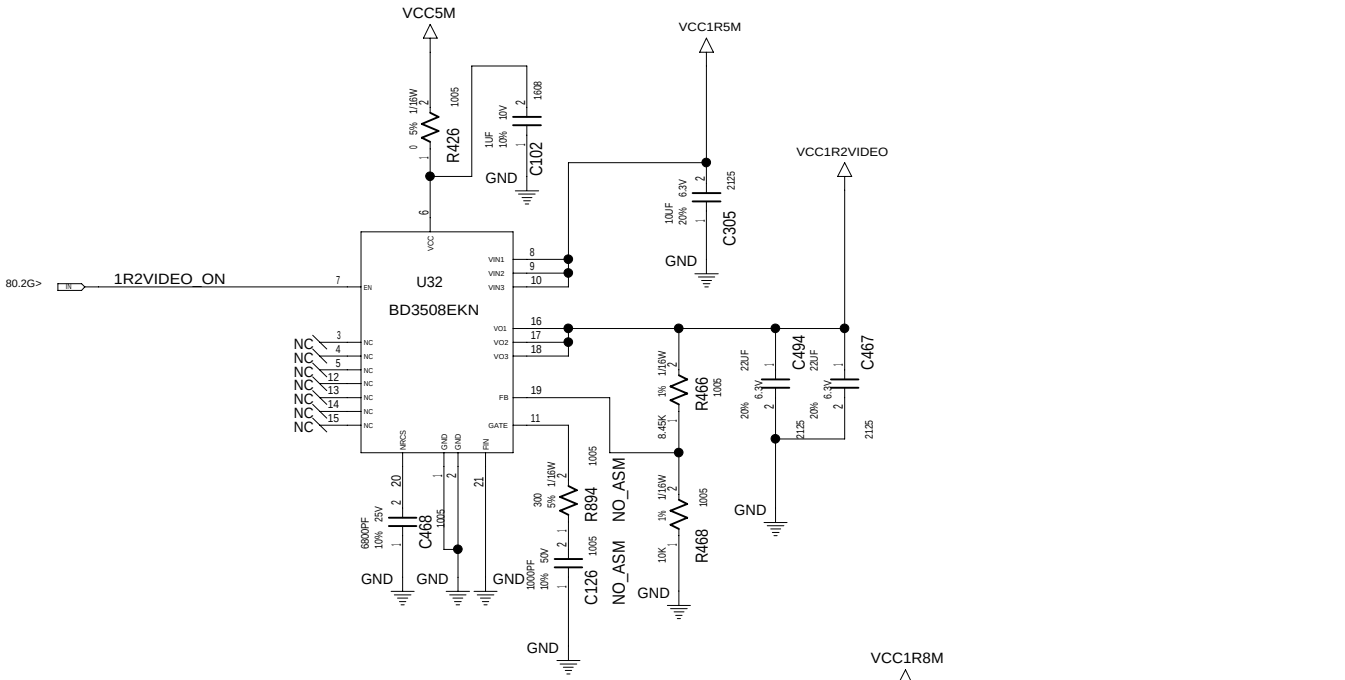

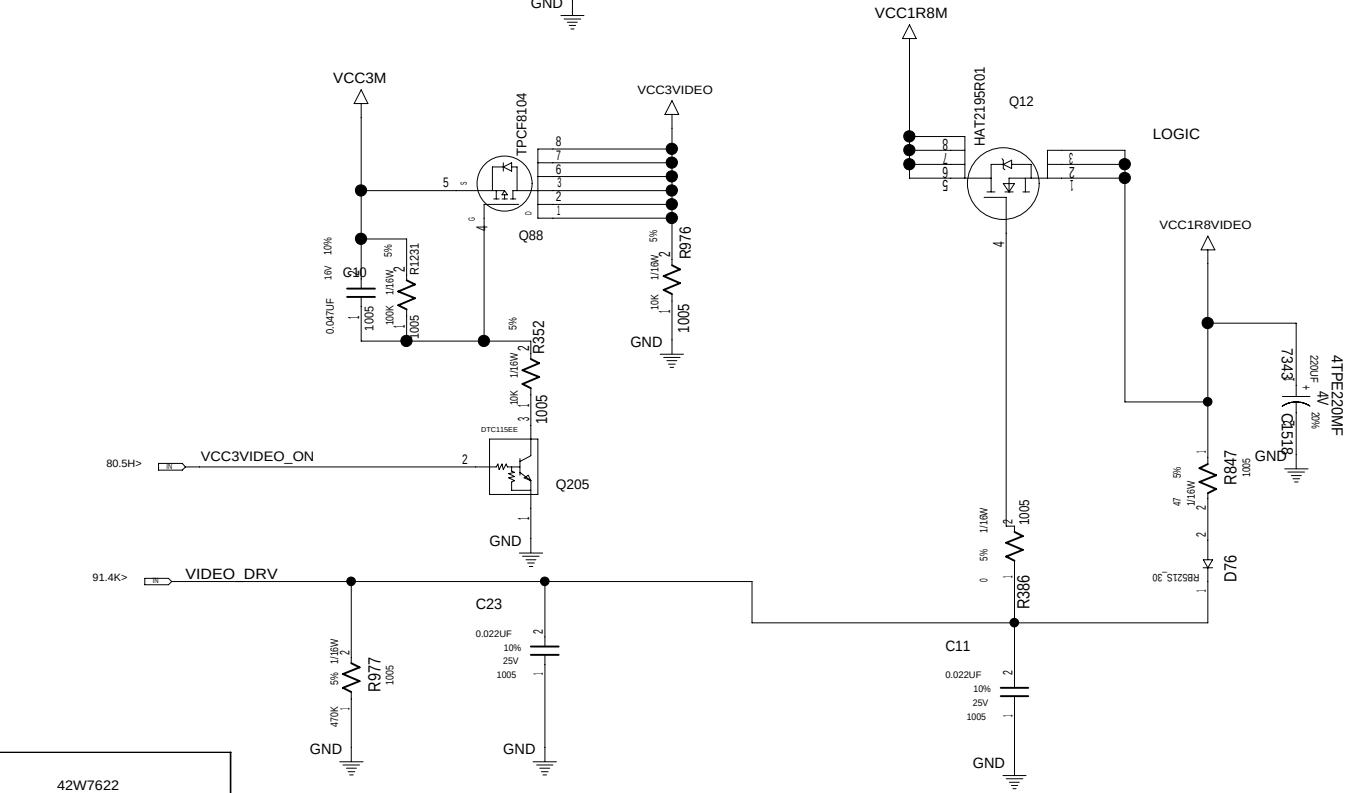

DESIGNER	K.Y	06/01/06
CHECKED	Y.I	06/01/06
APPROVED	T.S	06/01/06
CLASS	T.S	06/01/06

THIS DOCUMENT IS THE PROPERTY OF LENOVO.ITS USE IS AUTHORIZED ONLY FOR RESPONDING TO A REQUEST FOR QUOTATION OR FOR THE PERFORMANCE OF WORK FOR LENOVO.ALL QUESTIONS MUST BE REFERRED TO THE LENOVO PURCHASING DEPARTMENT.

PART NO. 42W7622

TITLE MLB-1 SVT

LOAD SW VIDEO

LENOVO CONFIDENTIAL

42W7622

	DATE	EC NO.	PART NO.
	20061220	L11403	42W7622
			DEVELOPMENT NO. / Q/M: 93 / 97

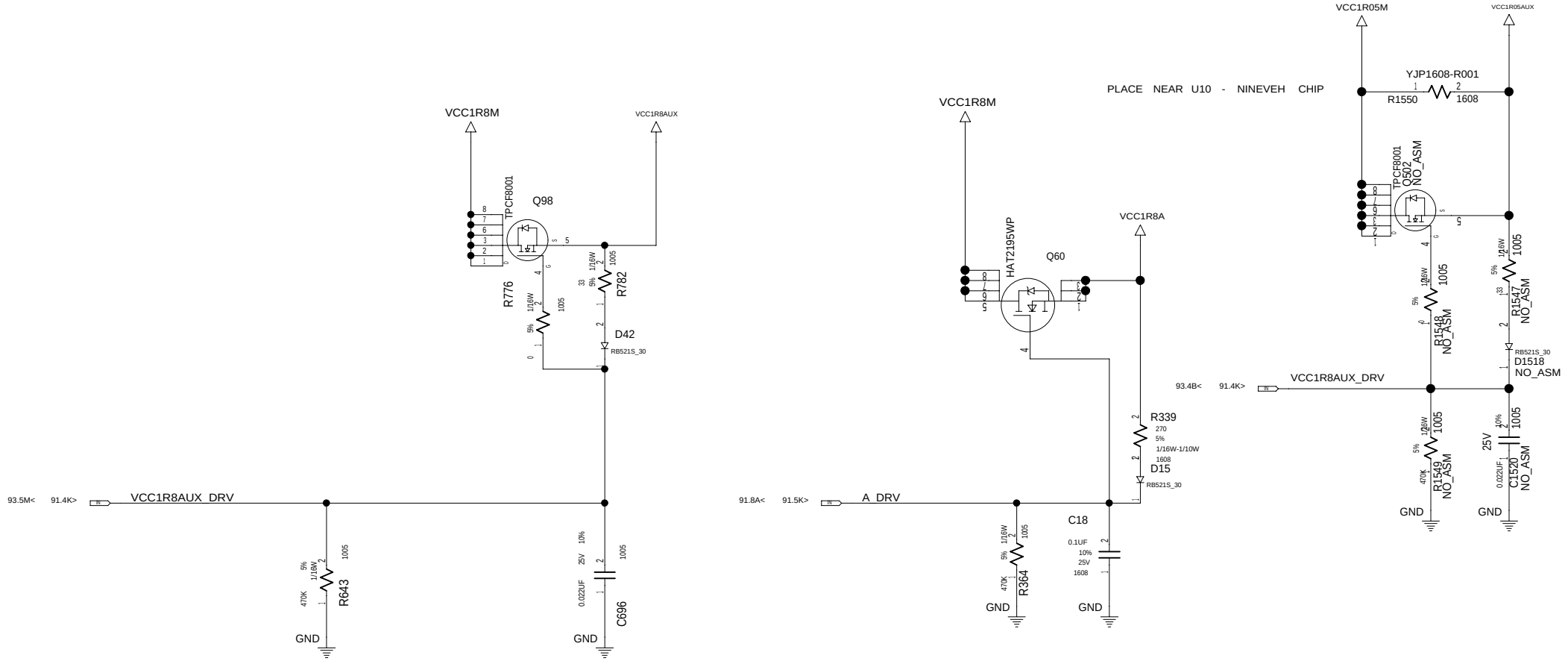

DESIGNER	K.Y	06/01/06	PART NO. 42W7622
CHECKED	Y.I	06/01/06	TITLE MLB-1 SVT
APPROVED	T.S	06/01/06	LOAD SW FOR AUX2
CLASS	T.S	06/01/06	

THIS DOCUMENT IS THE PROPERTY OF LENOVO.ITS USE IS AUTHORIZED ONLY FOR RESPONDING TO A REQUEST FOR QUOTATION OR FOR THE PERFORMANCE OF WORK FOR LENOVO.ALL QUESTIONS MUST BE REFERRED TO THE LENOVO PURCHASING DEPARTMENT.

LENOVO CONFIDENTIAL

42W7622

	WWAN	NON WWAN
Q111	ASM	NO_ASM

LOGIC

	DATE	EC NO.
	20061220	L11403

PART NO. 42W7622

DEVELOPMENT NO.

Q/M 94 / 97

AMT	SUPPORT	NON
R1135	NO_ASM	ASM
Q68	ASM	NO_ASM
R242	ASM	NO_ASM
R274		
D24		
C698		
C614	0.022UF	0.047UF

DESIGNER	K.Y	06/01/06
CHECKED	Y.I	06/01/06
APPROVED	T.S	06/01/06
CLASS	T.S	06/01/06

PART NO. 42W7622

TITLE MLB-1 SVT

LOAD SW B,UBAY

THIS DOCUMENT IS THE PROPERTY OF LENOVO.ITS USE IS AUTHORIZED ONLY FOR RESPONDING TO A REQUEST FOR QUOTATION OR FOR THE PERFORMANCE OF WORK FOR LENOVO.ALL QUESTIONS MUST BE REFERRED TO THE LENOVO PURCHASING DEPARTMENT.

LENOVO CONFIDENTIAL

42W7622

	DATE	EC NO.	PART NO. 42W7622
	20061220	L11403	DEVELOPMENT NO. / Q/M 95 / 97

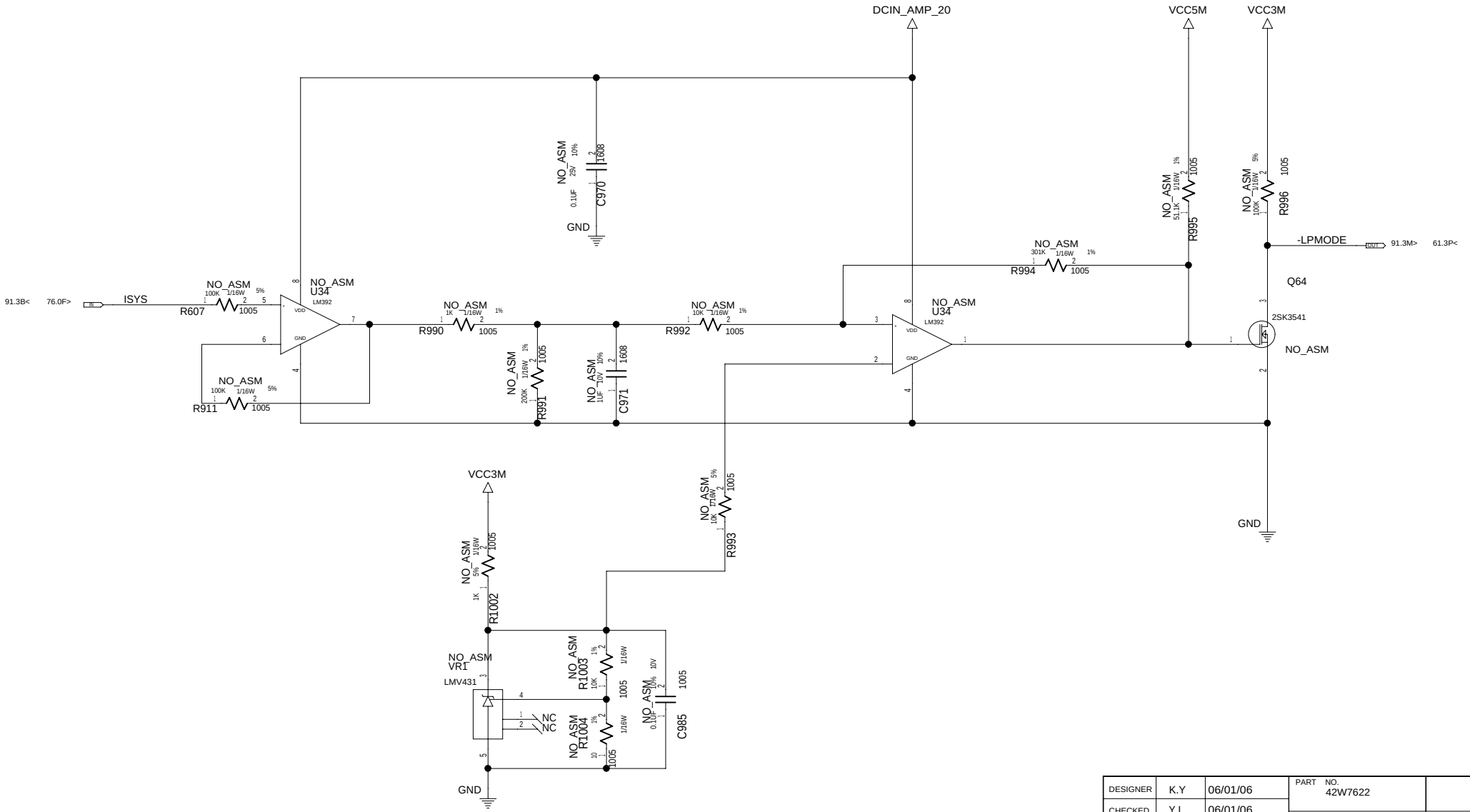

DESIGNER	K.Y	06/01/06
CHECKED	Y.I	06/01/06
APPROVED	T.S	06/01/06
CLASS	T.S	06/01/06

THIS DOCUMENT IS THE PROPERTY OF LENOVO.ITS USE IS AUTHORIZED ONLY FOR RESPONDING TO A REQUEST FOR QUOTATION OR FOR THE PERFORMANCE OF WORK FOR LENOVO.ALL QUESTIONS MUST BE REFERRED TO THE LENOVO PURCHASING DEPARTMENT.

PART NO. 42W7622

TITLE MLB-1 SVT

MAX POWER CTRL

LENOVO CONFIDENTIAL

42W7622

	DATE	EC NO.	PART NO. 42W7622
	20061220	L11403	DEVELOPMENT NO.
			Q/M 96 / 97

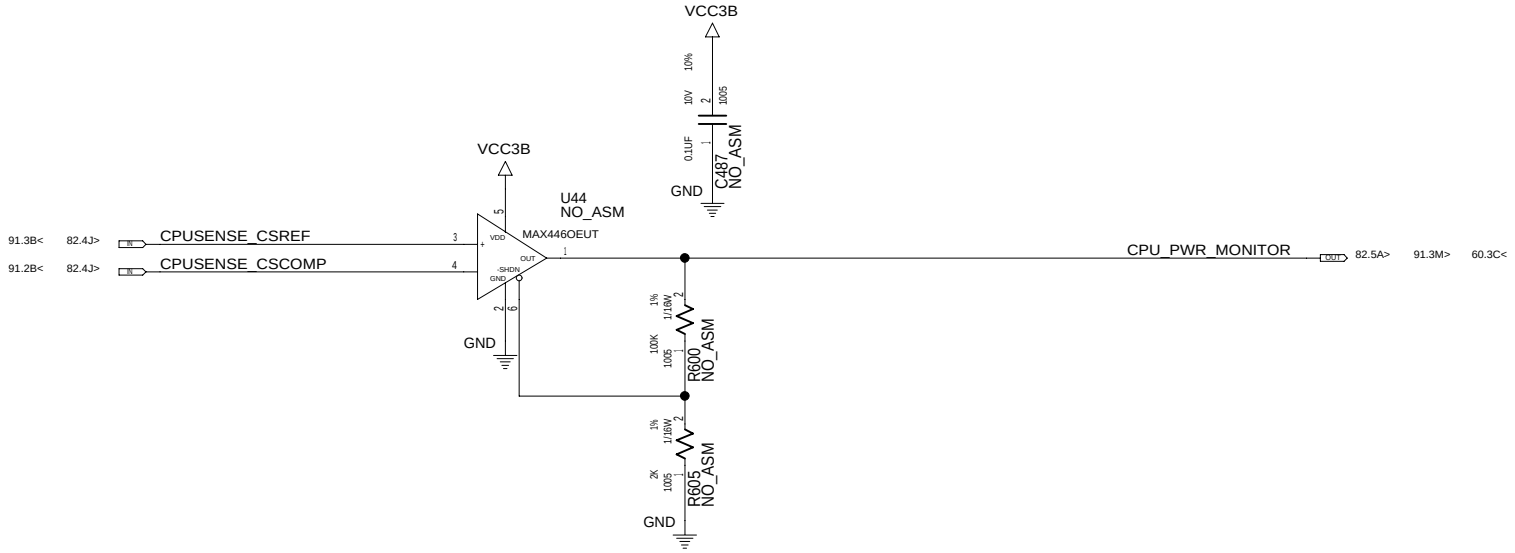

			PART NO. 42W7622	
DESIGNER	K.Y	06/01/06		
CHECKED	Y.I	06/01/06	TITLE MLB-1 SVT	
APPROVED	T.S	06/01/06	POWER MOMITOR	
CLASS	T.S	06/01/06		

THIS DOCUMENT IS THE PROPERTY OF LENOVO.ITS USE IS AUTHORIZED ONLY FOR RESPONDING TO A REQUEST FOR QUOTATION OR FOR THE PERFORMANCE OF WORK FOR LENOVO.ALL QUESTIONS MUST BE REFERRED TO THE LENOVO PURCHASING DEPARTMENT.

LENOVO CONFIDENTIAL

	DATE	EC NO.	PART NO. 42W7622
	20061220	L11403	DEVELOPMENT NO.
			Q/M 97 / 97

PTH FOR SCREW HOLE

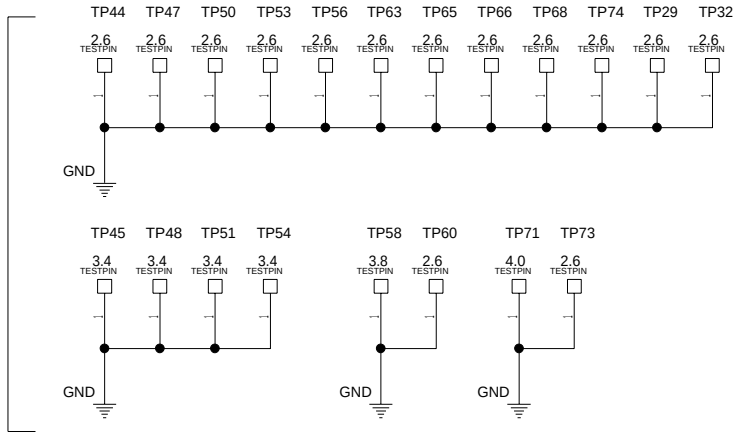

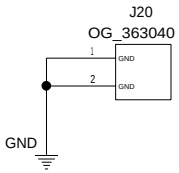

DESIGNER	K.Y	06/01/06	PART NO. 42W7622
CHECKED	Y.I	06/01/06	TITLE MLB-1 SVT
APPROVED	T.S	06/01/06	PTH FOR SCREW HOLES
CLASS	T.S	06/01/06	

THIS DOCUMENT IS THE PROPERTY OF LENOVO.ITS USE IS AUTHORIZED ONLY FOR RESPONDING TO A REQUEST FOR QUOTATION OR FOR THE PERFORMANCE OF WORK FOR LENOVO.ALL QUESTIONS MUST BE REFERRED TO THE LENOVO PURCHASING DEPARTMENT.

LENOVO CONFIDENTIAL

	DATE	EC NO.

PART NO.

DEVELOPMENT NO.

Q/M /

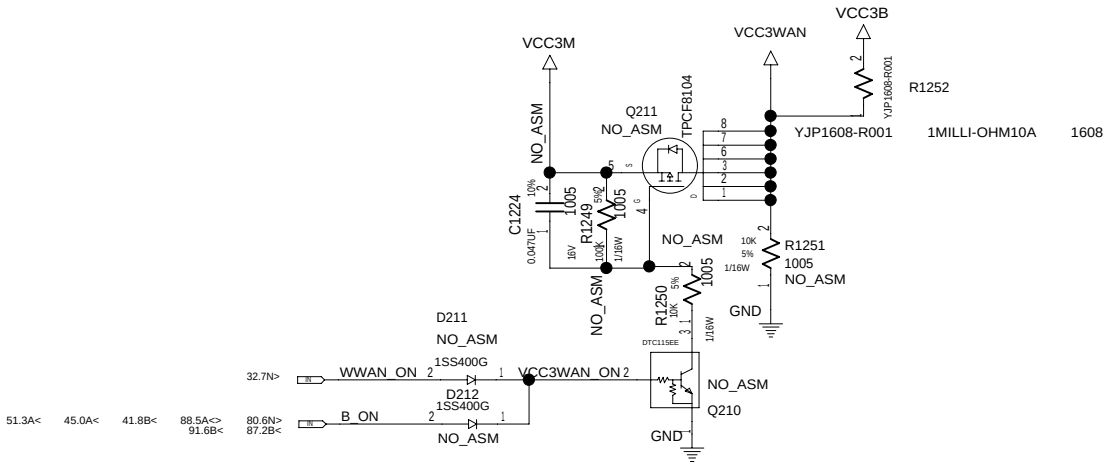

DESIGNER	K.Y	06/01/06
CHECKED	Y.I	06/01/06
APPROVED	T.S	06/01/06
CLASS	T.S	06/01/06

THIS DOCUMENT IS THE PROPERTY OF IBM ITS USE IS AUTHORIZED ONLY FOR RESPONDING TO A REQUEST FOR QUOTATION OR FOR THE PERFORMANCE OF WORK FOR IBM. ALL QUESTIONS MUST BE REFERRED TO THE IBM PURCHASING DEPARTMENT.

PART NO. 42W7501

IBM

TITLE MLB-1 SVT

LOAD SW VCC3KDDI

LENOVO CONFIDENTIAL