	DATE	EC NO.
REL	11/21/03	J45843A

PART NO. 13R1088

DEVELOPMENT NO.

Q/M 1 /82

ROME-1 PLANAR (M9/KINNERETH-R/WO-ACC BASE)

VER 0.99 NOV/21/2003

1. TITLE PAGE
2. EC HISTORY
3. CPU(1/3)
4. CPU(2/3)
5. CPU(3/3)
6. ITP CONN
7. VCCCPUCORE DECOUPLING
8. MCH-M(1/4)
9. MCH-M(2/4)
10. MCH-M(3/4)
11. MCH-M(4/4)
12. DDR SO DIMM CONNECTOR 0
13. DDR SO DIMM CONNECTOR 1
14. SSTL-2 TERMINATION
15. SSTL-2 DECOUPLING
16. CLOCK GEN(CK-TITAN)
17. RADEON M9_CSP (1/7)
18. RADEON M9_CSP (2/7)
19. RADEON M9_CSP (3/7)
20. RADEON M9_CSP (4/7)
21. RADEON M9_CSP (5/7)
22. RADEON M9_CSP(6/7)(7/7)
23. < BLANK >
24. LCD CONNECTOR
25. ICH4-M(1/3)
26. ICH4-M(2/3)
27. ICH4-M(3/3)
28. HDD I/F CONNECTOR
29. CLEAN SHEET BAY
30. USB POWER
31. AUDIO AD1981A
32. AUDIO MISC
33. AUDIO INT MIC
34. AUDIO HP & LINE IN CONN
35. AUDIO EXT MIC CONN
36. AUDIO SPEAKER
37. AUDIO HDP AMP AN12942A(1/2)
38. AUDIO HDP AMP AN12942A(2/2)
39. CDC CONNECTOR
40. CARD BUS PCI1620(1/2)
41. CARD BUS PCI1620(2/2)
42. CARD BUS POWER CTRL
43. CARD BUS SLOT
44. EMC DECOUPLING
45. MINI PCI SLOT
46. PCI BUS SWITCH
47. DOCKING CONNECTOR
48. FWH,RTC BATTERY
49. H8S/2169A
50. KEYBOARD CONNECTOR
51. TOUCH PAD CONNECTOR
52. MISC G/A (PMH-2)
53. DC-DC VCCCPUCORE DECAP
54. SUPER I/O PC87392
55. SERIAL INTERFACE
56. EXT CRT INTERFACE
57. TV-OUT
58. PARALLELL INTERFACE
59. THERMAL SENSOR
60. I2CBUS/SMBUS/CRYPT
61. FAN CONTROL
62. DC-IN AND CHARGER
63. CHARGE SELECTOR
64. BATTERY INPUT
65. BATTERY MONITOR
66. POWER SEQUENCE
67. DC-DC VCC3M/VCC5M(MAX1631)
68. DC-DC VCCCPUCORE (ADP3205)
69. DC-DC VCC1R2M/VCCCPUIO(MAX1845)
70. DC-DC VCC2R5A/VCC1R25B(MAX1845)
71. DC-DC VCC1R8M/VCCVIDEOCORE(MAX1844)
72. VCC1R5M/A/B/AUX
73. TSURUMAI
74. GIGABIT ETHER LOAD SW
75. LOAD SW
76. GIGABIT ETHERNET (1/3)
77. GIGABIT ETHERNET (2/3)
78. GIGABIT ETHERNET (3/3)
79. IR MODULE / LARGE PTH HOLE
80. USB INTERFACE
81. RJ11/RJ45 CONNECTOR
82. G-SENSOR

DESIGNER	Y.I	11/21/03	PART NO. 13R1088 IBM
CHECKED	Y.Y	11/21/03	TITLE ROME-1 RWK(V099)
APPROVED	K.T	11/21/03	
CLASS	K.T	11/21/03	TITLE PAGE

IBM CONFIDENTIAL

EC HISTORY

	DATE	EC NO.
REL	11/21/03	J45843A

PART NO. 13R1088

DEVELOPMENT NO.

Q/M 2 /82

SIV

VER.0.53 08/12/2002 APPLY RM_EC_SIV14
VER.0.54 08/13/2002 APPLY RM_EC_SIV15
SIV GERBER RELEASE (08/15/2002)
VER.0.55 08/21/2002 APPLY RM_EC_SIV16(G-SENSOR)
VER.0.56 08/29/2002 APPLY RM_EC_SIV17/18(VBL16/CHARGER/TSURUMAI)
VER.0.57 09/02/2002 APPLY RM_EC_SIV19(PMH4)

SIT

VER.0.58 09/18/2002 APPLY RM_EC_SIT01
VER.0.59 09/24/2002 APPLY RM_EC_SIT02
VER.0.60 09/27/2002 APPLY RM_EC_SIT03/04
VER.0.61 09/30/2002 APPLY RM_EC_SIT05
VER.0.62 10/01/2002 APPLY RM_EC_SIT06
VER.0.63 10/02/2002 APPLY RM_EC_SIT07
VER.0.64 10/03/2002 APPLY RM_EC_SIT08
VER.0.65 10/04/2002 APPLY RM_EC_SIT09
VER.0.66 10/08/2002 APPLY RM_EC_SIT10(W/O L9/L19 CHANGE)
VER.0.67 10/09/2002 APPLY RM_EC_SIT11
VER.0.68 10/11/2002 APPLY RM_EC_SIT12
VER.0.69 10/15/2002 APPLY RM_EC_SIT13
VER.0.70 10/16/2002 APPLY RM_EC_SIT14
VER.0.71 10/16/2002 APPLY RM_EC_SIT15
SIT GERBER RELEASE (10/17/2002)
VER.0.72 10/22/2002 APPLY RM_EC_SIT16
VER.0.73 10/25/2002 APPLY RM_EC_SIT17
MODIFICATION FOR M10
VER.0.74 10/28/2002 APPLY RM_EC_M10_01
VER.0.75 10/29/2002 APPLY RM_EC_M10_02
VER.0.76 10/30/2002 APPLY RM_EC_M10_03
VER.0.77 10/31/2002 APPLY RM_EC_M10_04
VER.0.78 10/31/2002 APPLY RM_EC_M10_05
SIT-M10 GERBER RELEASE (11/06/2002)

SVT

VER.0.79 11/27/2002 APPLY RM_EC_SVT001
VER.0.80 12/03/2002 APPLY RM_EC_SVT002
VER.0.81 12/06/2002 APPLY RM_EC_SVT003
VER.0.82 12/09/2002 MOVED TP17/18 AND MODIFIED COMMENTS
VER.0.83 12/11/2002 APPLY RM_EC_SVT004
VER.0.84 12/11/2002 APPLY RM_EC_SVT005
VER.0.85 12/12/2002 CHANGE C26/C221/C194 TO 3225(H2.1MM)

SVT GERBER RELEASE (12/12/2002)

VER.0.86 12/16/2002 CHANGE C378/C820/C821/C822/C914/C916/Q59 TO ASM.
VER.0.87 12/20/2002 APPLY RM1-AEC-003 (DELETE ACCELEROMETER)
VER.0.88 01/07/2003 APPLY RM1-AEC-004 (CHANGE R120 FROM 10K TO 100K.)
VER.0.89 01/15/2003 APPLY RM1-AEC-005/006/007
VER.0.90 01/23/2003 APPLY RM1-AEC-009/010
VER.0.91 02/10/2003 APPLY RM1-AEC-013
VER.0.92 03/03/2003 APPLY RM1-AEC-018A
VER.0.93 03/26/2003 APPLY RM1-AEC-021
VER.0.94 04/07/2003 APPLY RM1-AEC-022
VER.0.95 04/16/2003 VER.95 IS USED FOR SEMTECH REWORK
VER.0.96 04/16/2003 APPLY AEC-J17959 (ADD 2 SEMTECH DIODE EMBED)
SVT EMBED GERBER RELEASE (04/18/2003)
VER.0.97 05/19/2003 APPLY AEC-J24314(CHANGE R132 1K TO 0 OHM)
VER.0.98 11/06/2003 APPLY EC-J46090(CHANGE AUDIO AMP U22/C65/R881)

VER.0.99 11/21/2003 APPLY APL-AEC-38 (CHANGE Q107 TO D2000) PAGE 29

13R1088

DESIGNER	Y.I	11/21/03
CHECKED	Y.Y	11/21/03
APPROVED	K.T	11/21/03
CLASS	K.T	11/21/03

PART NO. 13R1088

IBM

TITLE ROME-1 RWK(V099)
HISTORY

IBM CONFIDENTIAL

REL	DATE 11/21/03	EC NO. J45843A

PART NO. 13R1088

DEVELOPMENT NO.

Q/M 3 /82

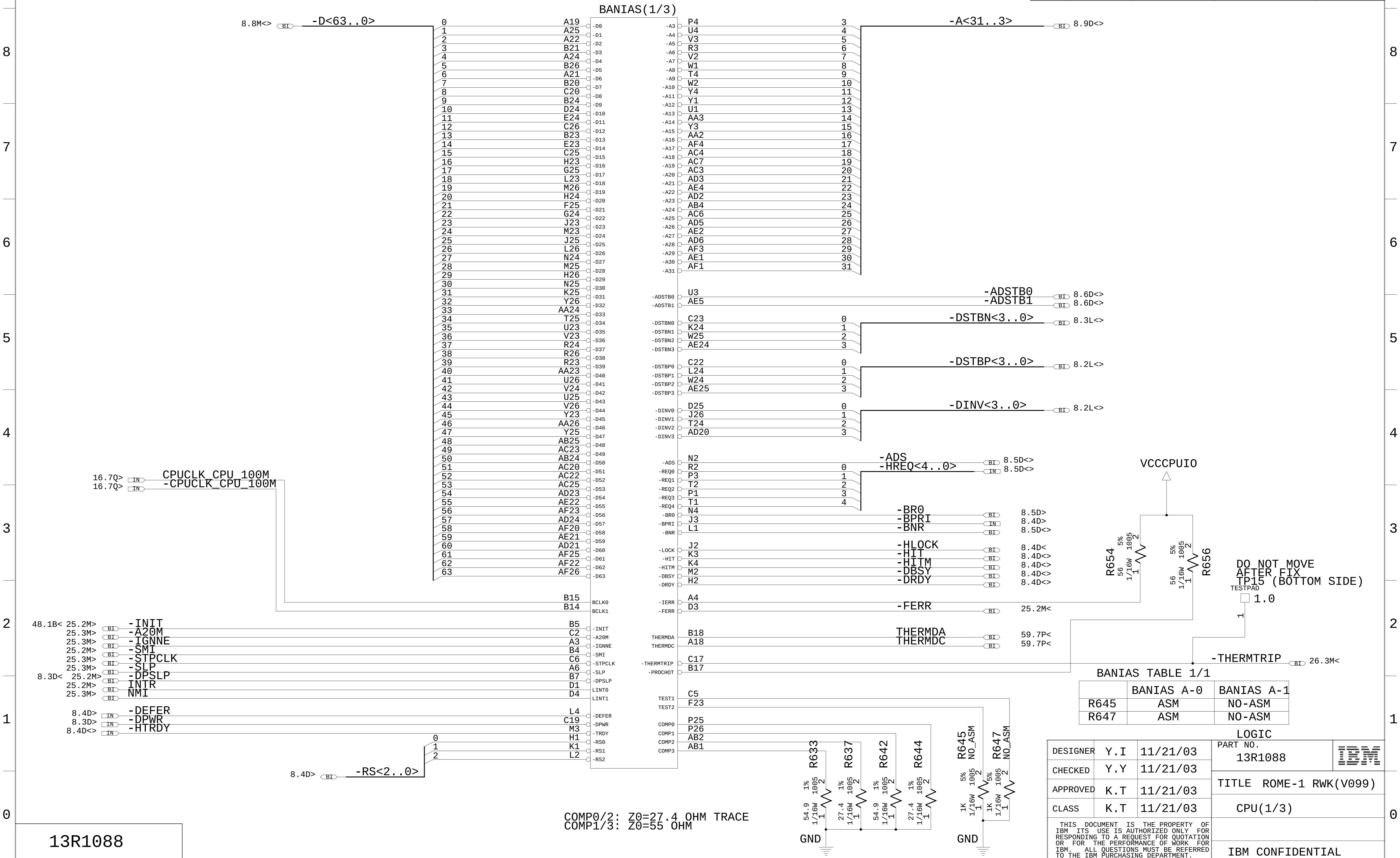
U58
BANIAS(1/3)
8.8M<> BI -D<63..0>
0 A19 -D0
1 A25 -D1
2 A22 -D2
3 B21 -D3
4 A24 -D4
5 B26 -D5
6 A21 -D6
7 B20 -D7
8 C20 -D8
9 B24 -D9
10 D24 -D10
11 E24 -D11
12 C26 -D12
13 B23 -D13
14 E23 -D14
15 C25 -D15
16 H23 -D16
17 G25 -D17
18 L23 -D18
19 M26 -D19
20 H24 -D20
21 F25 -D21
22 G24 -D22
23 J23 -D23
24 M23 -D24
25 J25 -D25
26 L26 -D26
27 N24 -D27
28 M25 -D28
29 H26 -D29
30 N25 -D30
31 K25 -D31
32 Y26 -D32
33 AA24 -D33
34 T25 -D34
35 U23 -D35
36 V23 -D36
37 R24 -D37
38 R26 -D38
39 R23 -D39
40 AA23 -D40
41 U26 -D41
42 V24 -D42
43 U25 -D43
44 V26 -D44
45 Y23 -D45
46 AA26 -D46
47 Y25 -D47
48 AB25 -D48
49 AC23 -D49
50 AB24 -D50
51 AC20 -D51
52 AC22 -D52
53 AC25 -D53
54 AD23 -D54
55 AE22 -D55
56 AF23 -D56
57 AD24 -D57
58 AF20 -D58
59 AE21 -D59
60 AD21 -D60
61 AF25 -D61
62 AF22 -D62
63 AF26 -D63
-A<31..3> BI 8.9D<>
-A3 P4 3
-A4 U4 4
-A5 V3 5
-A6 R3 6
-A7 V2 7
-A8 W1 8
-A9 T4 9
-A10 W2 10
-A11 Y4 11
-A12 Y1 12
-A13 U1 13
-A14 AA3 14
-A15 Y3 15
-A16 AA2 16
-A17 AF4 17
-A18 AC4 18
-A19 AC7 19
-A20 AC3 20
-A21 AD3 21
-A22 AE4 22
-A23 AD2 23
-A24 AB4 24
-A25 AC6 25
-A26 AD5 26
-A27 AE2 27
-A28 AD6 28
-A29 AF3 29
-A30 AE1 30
-A31 AF1 31
-ADSTB0 U3 -ADSTB0 BI 8.6D<>
-ADSTB1 AE5 -ADSTB1 BI 8.6D<>
-DSTBN<3..0> BI 8.3L<>
-DSTBN0 C23 0
-DSTBN1 K24 1
-DSTBN2 W25 2
-DSTBN3 AE24 3
-DSTBP<3..0> BI 8.2L<>
-DSTBP0 C22 0
-DSTBP1 L24 1
-DSTBP2 W24 2
-DSTBP3 AE25 3
-DINV<3..0> BI 8.2L<>
-DINV0 D25 0
-DINV1 J26 1
-DINV2 T24 2
-DINV3 AD20 3
-ADS N2 -ADS BI 8.5D<>
-HREQ<4..0> IN 8.5D<>
-REQ0 R2 0
-REQ1 P3 1
-REQ2 T2 2
-REQ3 P1 3
-REQ4 T1 4
-BR0 N4 -BR0 BI 8.5D>
-BPRI J3 -BPRI IN 8.4D>
-BNR L1 -BNR BI 8.5D<>
-LOCK J2 -HLOCK BI 8.4D<
-HIT K3 -HIT BI 8.4D<>
-HITM K4 -HITM BI 8.4D<>
-DBSY M2 -DBSY BI 8.4D<>
-DRDY H2 -DRDY BI 8.4D<>
-IERR A4
-FERR D3 -FERR BI 25.2M<
THERMDA B18 THERMDA BI 59.7P<
THERMDC A18 THERMDC BI 59.7P<
-THERMTRIP C17 -THERMTRIP BI 26.3M<
-PROCHOT B17
TEST1 C5
TEST2 F23
COMP0 P25
COMP1 P26
COMP2 AB2
COMP3 AB1
16.7Q> IN CPUCLK_CPU_100M
16.7Q> IN -CPUCLK_CPU_100M
B15 BCLK0
B14 BCLK1
48.1B< 25.2M> BI -INIT B5 -INIT
25.3M> BI -A20M C2 -A20M
25.3M> BI -IGNNE A3 -IGNNE
25.2M> BI -SMI B4 -SMI
25.3M> BI -STPCLK C6 -STPCLK
25.3M> BI -SLP A6 -SLP
8.3D< 25.2M> BI -DPSLP B7 -DPSLP
25.2M> BI INTR D1 LINT0
25.3M> BI NMI D4 LINT1
8.4D> IN -DEFER L4 -DEFER
8.3D> IN -DPWR C19 -DPWR
8.4D<> IN -HTRDY M3 -TRDY
0 H1 -RS0
1 K1 -RS1
2 L2 -RS2
8.4D> BI -RS<2..0>
VCCCPUIO
R654 56 1/16W 5% 1005 1 2
R656 56 1/16W 5% 1005 1 2
DO NOT MOVE
AFTER FIX
TP15 (BOTTOM SIDE)
TESTPAD
1.0
1
R633 54.9 1/16W 1% 1005 1 2
R637 27.4 1/16W 1% 1005 1 2
R642 54.9 1/16W 1% 1005 1 2
R644 27.4 1/16W 1% 1005 1 2
R645 NO_ASM 1K 1/16W 5% 1005 1 2
R647 NO_ASM 1K 1/16W 5% 1005 1 2
GND
GND

COMP0/2: Z0=27.4 OHM TRACE
COMP1/3: Z0=55 OHM

BANIAS TABLE 1/1

	BANIAS A-0	BANIAS A-1
R645	ASM	NO-ASM
R647	ASM	NO-ASM

LOGIC

DESIGNER	Y.I	11/21/03
CHECKED	Y.Y	11/21/03
APPROVED	K.T	11/21/03
CLASS	K.T	11/21/03

PART NO. 13R1088

IBM

TITLE ROME-1 RWK(V099)

CPU(1/3)

IBM CONFIDENTIAL

	DATE	EC NO.
REL	11/21/03	J45843A

PART NO. 13R1088

DEVELOPMENT NO.

Q/M 4 /82

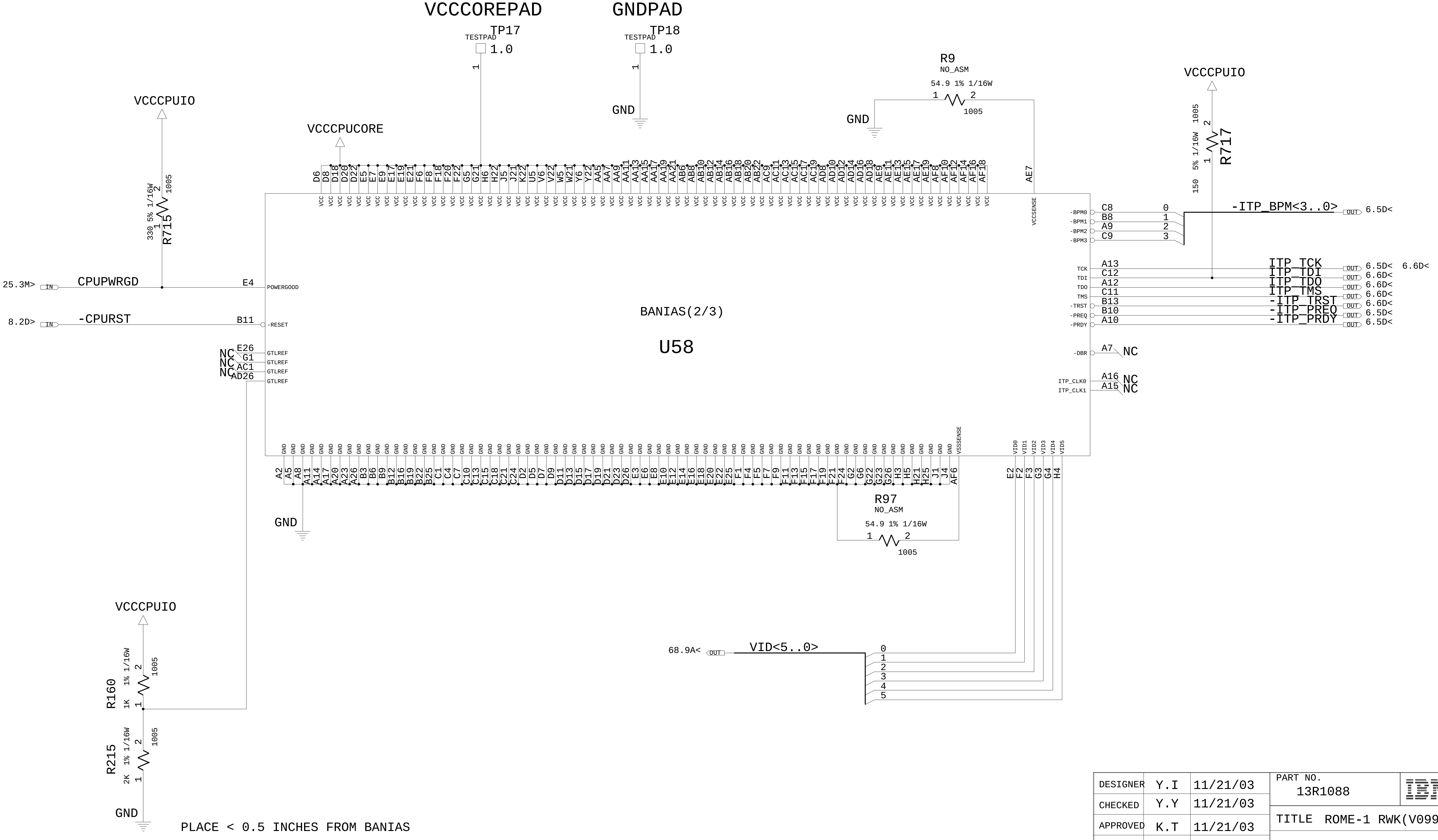

VCCCOREPAD
TESTPAD
TP17
1.0
1
GNDPAD
TESTPAD
TP18
1.0
1
GND
R9
NO_ASM
54.9 1% 1/16W
1
2
1005
GND
VCCCPUIO
1005
150 5% 1/16W
2
1
R717
VCCCPUIO
1005
330 5% 1/16W
2
1
R715
VCCCPUCORE
D6 D8 D18 D20 D22 E5 E7 E9 E17 E19 E21 F6 F8 F18 F20 F22 G5 G21 H6 H22 J5 J21 K22 U5 V6 V22 W5 W21 Y6 Y22 AA5 AA7 AA9 AA11 AA13 AA15 AA17 AA19 AA21 AB6 AB8 AB10 AB12 AB14 AB16 AB18 AB20 AB22 AC9 AC11 AC13 AC15 AC17 AC19 AD8 AD10 AD12 AD14 AD16 AD18 AE9 AE11 AE13 AE15 AE17 AE19 AF8 AF10 AF12 AF14 AF16 AF18
VCC
AE7
VCCSENSE
-BPM0
-BPM1
-BPM2
-BPM3
C8
B8
A9
C9
0
1
2
3
-ITP_BPM<3..0>
OUT
6.5D<
TCK
TDI
TDO
TMS
-TRST
-PREQ
-PRDY
A13
C12
A12
C11
B13
B10
A10
ITP_TCK
ITP_TDI
ITP_TDO
ITP_TMS
-ITP_TRST
-ITP_PREQ
-ITP_PRDY
OUT
6.5D< 6.6D<
6.6D<
6.6D<
6.6D<
6.6D<
6.5D<
6.5D<
25.3M>
IN
CPUPWRGD
E4
POWERGOOD
8.2D>
IN
-CPURST
B11
-RESET
BANIAS(2/3)
U58
NC
NC
NC
E26
G1
AC1
AD26
GTLREF
GTLREF
GTLREF
GTLREF
-DBR
A7
NC
ITP_CLK0
ITP_CLK1
A16
A15
NC
NC
GND
A2 A5 A8 A11 A14 A17 A20 A23 A26 B3 B6 B9 B12 B16 B19 B22 B25 C1 C4 C7 C10 C13 C15 C18 C21 C24 D2 D5 D7 D9 D11 D13 D15 D17 D19 D21 D23 D26 E3 E6 E8 E10 E12 E14 E16 E18 E20 E22 E25 F1 F4 F5 F7 F9 F11 F13 F15 F17 F19 F21 F24 G2 G6 G22 G23 G26 H3 H5 H21 H25 J1 J4
AF6
VSSSENSE
VID0 VID1 VID2 VID3 VID4 VID5
E2 F2 F3 G3 G4 H4
GND
R97
NO_ASM
54.9 1% 1/16W
1
2
1005
68.9A<
OUT
VID<5..0>
0
1
2
3
4
5
VCCCPUIO
1005
R160
1K 1% 1/16W
2
1
1005
R215
2K 1% 1/16W
2
1
GND
PLACE < 0.5 INCHES FROM BANIAS

13R1088

DESIGNER	Y.I	11/21/03
CHECKED	Y.Y	11/21/03
APPROVED	K.T	11/21/03
CLASS	K.T	11/21/03

PART NO. 13R1088

IBM

TITLE ROME-1 RWK(V099)

CPU(2/3)

IBM CONFIDENTIAL

	DATE	EC NO.
REL	11/21/03	J45843A

PART NO. 13R1088

DEVELOPMENT NO.

Q/M 5 /82

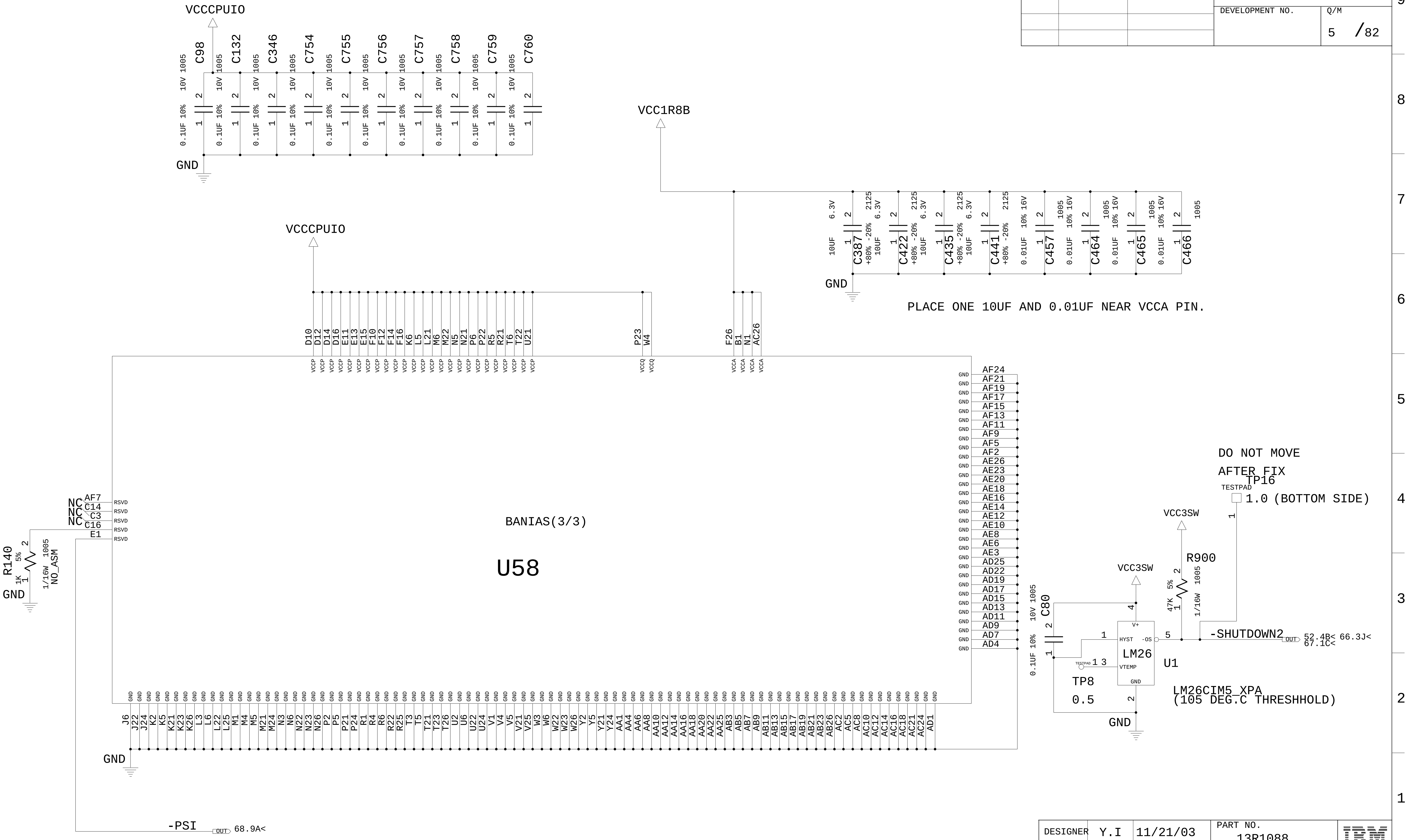

VCCCPUIO
C98
C132
C346
C754
C755
C756
C757
C758
C759
C760
0.1UF 10% 10V 1005
GND
VCC1R8B
C387 10UF 6.3V 2125
C422 10UF +80% -20% 6.3V 2125
C435 10UF +80% -20% 6.3V 2125
C441 10UF +80% -20% 6.3V 2125
C457 0.01UF 10% 16V 1005
C464 0.01UF 10% 16V 1005
C465 0.01UF 10% 16V 1005
C466 0.01UF 10% 16V 1005
PLACE ONE 10UF AND 0.01UF NEAR VCCA PIN.
VCCCPUIO
D10 D12 D14 D16 E11 E13 E15 F10 F12 F14 F16 K6 L5 L21 M6 M22 N5 N21 P6 P22 R5 R21 T6 T22 U21
VCCP
P23 W4
VCCQ
F26 B1 N1 AC26
VCCA
AF24 AF21 AF19 AF17 AF15 AF13 AF11 AF9 AF5 AF2 AE26 AE23 AE20 AE18 AE16 AE14 AE12 AE10 AE8 AE6 AE3 AD25 AD22 AD19 AD17 AD15 AD13 AD11 AD9 AD7 AD4
GND
NC AF7
NC C14
NC C3
NC C16
E1
RSVD
BANIAS(3/3)
U58
R140 1K 5% 1/16W 1005 NO_ASM
GND
J6 J22 J24 K2 K5 K21 K23 K26 L3 L6 L22 L25 M1 M4 M5 M21 M24 N3 N6 N22 N23 N26 P2 P5 P21 P24 R1 R4 R6 R22 R25 T3 T5 T21 T23 T26 U2 U6 U22 U24 V1 V4 V5 V21 V25 W3 W6 W22 W23 W26 Y2 Y5 Y21 Y24 AA1 AA4 AA6 AA8 AA10 AA12 AA14 AA16 AA18 AA20 AA22 AA25 AB3 AB5 AB7 AB9 AB11 AB13 AB15 AB17 AB19 AB21 AB23 AB26 AC2 AC5 AC8 AC10 AC12 AC14 AC16 AC18 AC21 AC24 AD1
GND
-PSI
OUT 68.9A<
DO NOT MOVE
AFTER FIX
TP16
TESTPAD
1.0 (BOTTOM SIDE)
VCC3SW
R900 47K 5% 1/16W 1005
VCC3SW
C80 0.1UF 10% 10V 1005
V+
HYST
-OS
VTEMP
LM26
U1
TESTPAD
TP8
0.5
-SHUTDOWN2
OUT 52.4B< 66.3J< 67.1C<
LM26CIM5_XPA
(105 DEG.C THRESHHOLD)
GND

13R1088

DESIGNER	Y.I	11/21/03
CHECKED	Y.Y	11/21/03
APPROVED	K.T	11/21/03
CLASS	K.T	11/21/03

PART NO. 13R1088

IBM

TITLE ROME-1 RWK(V099)

CPU(3/3)

IBM CONFIDENTIAL

	DATE	EC NO.
REL	11/21/03	J45843A

PART NO. 13R1088

DEVELOPMENT NO.

Q/M 6 /82

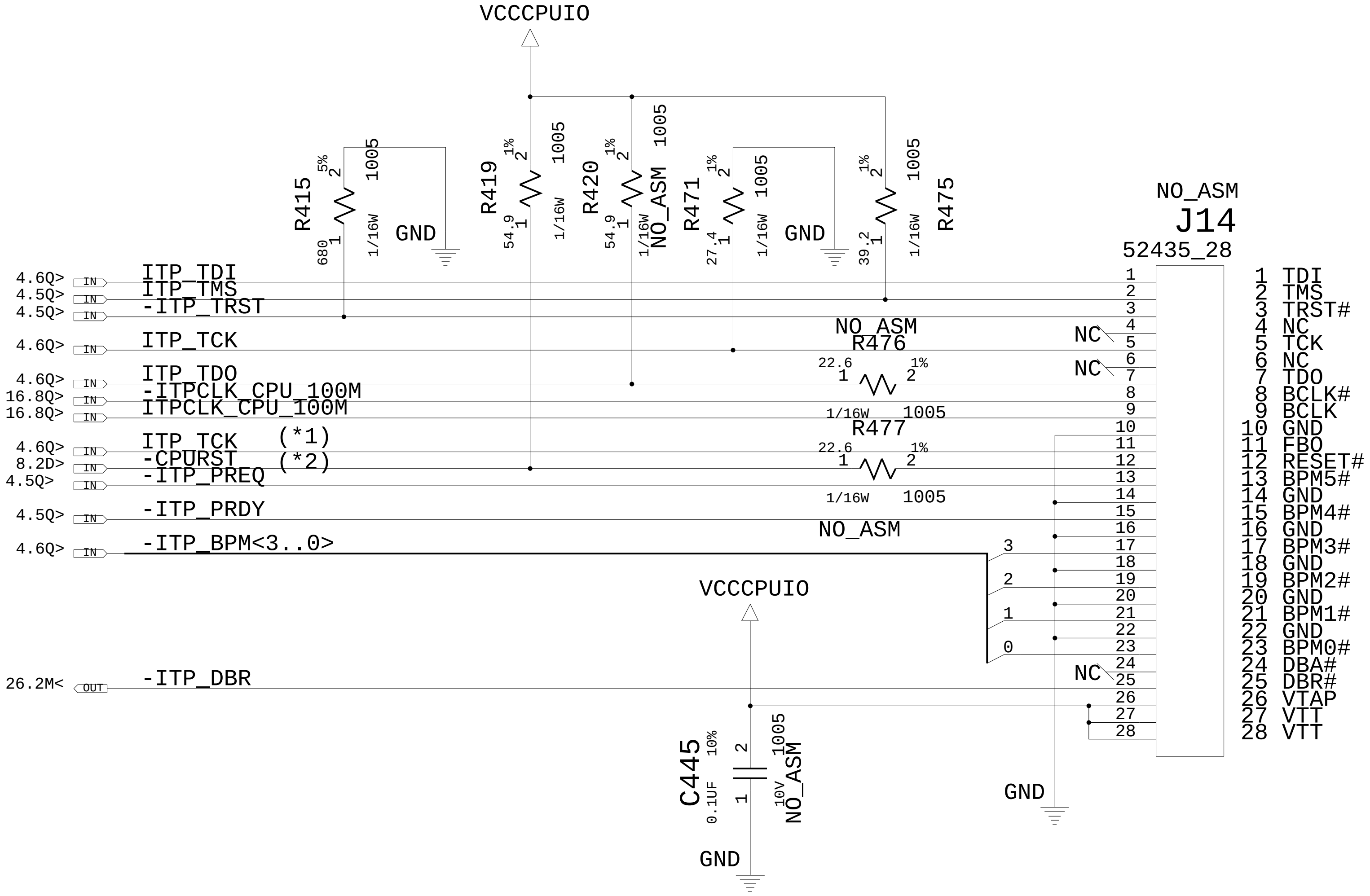

VCCCPUIO
R415 680 5% 1/16W 1005
GND
R419 54.9 1% 1/16W 1005
R420 54.9 1% 1/16W 1005 NO_ASM
R471 27.4 1% 1/16W 1005
GND
R475 39.2 1% 1/16W 1005
4.6Q> IN ITP_TDI
4.5Q> IN ITP_TMS
4.5Q> IN -ITP_TRST
4.6Q> IN ITP_TCK
4.6Q> IN ITP_TDO
16.8Q> IN -ITPCLK_CPU_100M
16.8Q> IN ITPCLK_CPU_100M
4.6Q> IN ITP_TCK (*1)
8.2D> IN -CPURST (*2)
4.5Q> IN -ITP_PREQ
4.5Q> IN -ITP_PRDY
4.6Q> IN -ITP_BPM<3..0>
26.2M< OUT -ITP_DBR
NO_ASM R476 22.6 1% 1/16W 1005
R477 22.6 1% 1/16W 1005 NO_ASM
VCCCPUIO
C445 0.1UF 10% 10V 1005 NO_ASM
GND
GND
NC
NC
NC
3 2 1 0
NO_ASM J14 52435_28
1 TDI
2 TMS
3 TRST#
4 NC
5 TCK
6 NC
7 TDO
8 BCLK#
9 BCLK
10 GND
11 FBO
12 RESET#
13 BPM5#
14 GND
15 BPM4#
16 GND
17 BPM3#
18 GND
19 BPM2#
20 GND
21 BPM1#
22 GND
23 BPM0#
24 DBA#
25 DBR#
26 VTAP
27 VTT
28 VTT

(*1) TCK SIGNAL IS BRANCHED AT BANIAS PIN

(*2) -CPURST SIGNAL IS BRANCHED AT ODEM PIN

DESIGNER	Y.I	11/21/03
CHECKED	Y.Y	11/21/03
APPROVED	K.T	11/21/03
CLASS	K.T	11/21/03

PART NO. 13R1088

IBM

TITLE ROME-1 RWK(V099)

ITP CONN

IBM CONFIDENTIAL

	DATE	EC NO.
REL	11/21/03	J45843A

PART NO. 13R1088

DEVELOPMENT NO.

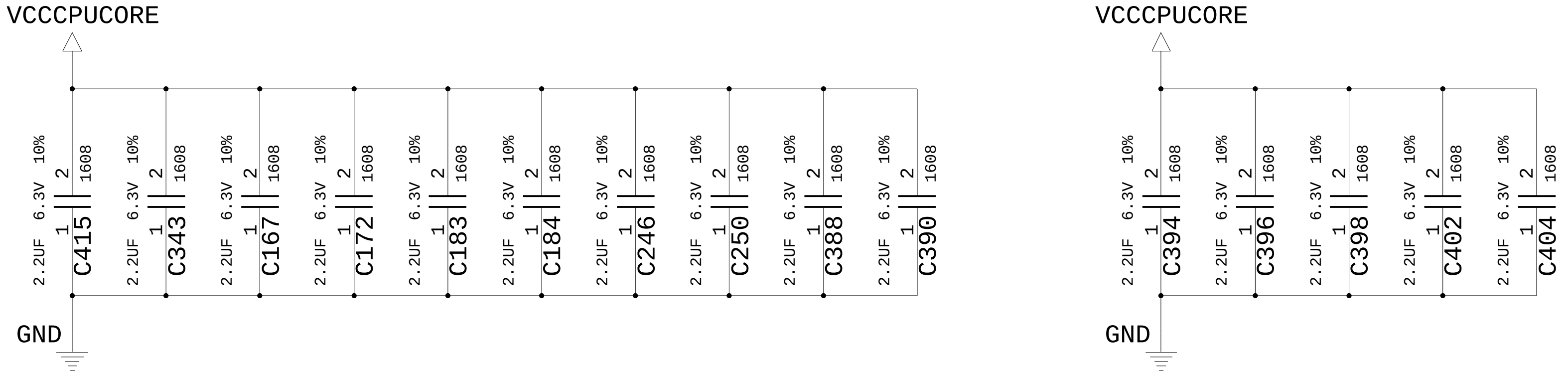
VCCCPUCORE
VCCCPUCORE
C415 2.2UF 6.3V 10% 1608
C343 2.2UF 6.3V 10% 1608
C167 2.2UF 6.3V 10% 1608
C172 2.2UF 6.3V 10% 1608
C183 2.2UF 6.3V 10% 1608
C184 2.2UF 6.3V 10% 1608
C246 2.2UF 6.3V 10% 1608
C250 2.2UF 6.3V 10% 1608
C388 2.2UF 6.3V 10% 1608
C390 2.2UF 6.3V 10% 1608
C394 2.2UF 6.3V 10% 1608
C396 2.2UF 6.3V 10% 1608
C398 2.2UF 6.3V 10% 1608
C402 2.2UF 6.3V 10% 1608
C404 2.2UF 6.3V 10% 1608
1
2
GND
GND

2.2UF X5R 1608 1/16W X15PCS

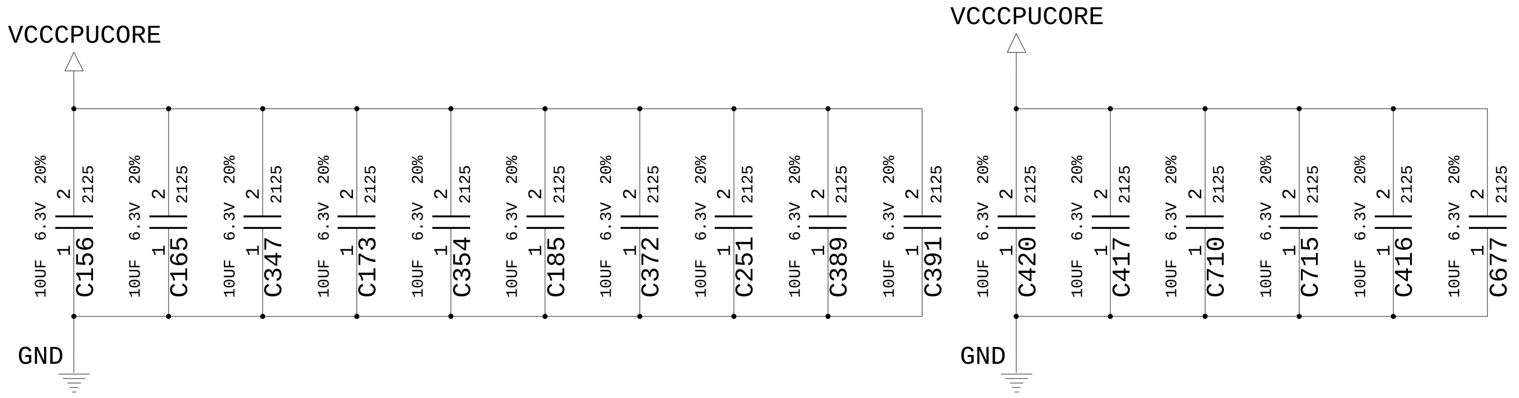
VCCCPUCORE
VCCCPUCORE
C156 10UF 6.3V 20% 2125
C165 10UF 6.3V 20% 2125
C347 10UF 6.3V 20% 2125
C173 10UF 6.3V 20% 2125
C354 10UF 6.3V 20% 2125
C185 10UF 6.3V 20% 2125
C372 10UF 6.3V 20% 2125
C251 10UF 6.3V 20% 2125
C389 10UF 6.3V 20% 2125
C391 10UF 6.3V 20% 2125
C420 10UF 6.3V 20% 2125
C417 10UF 6.3V 20% 2125
C710 10UF 6.3V 20% 2125
C715 10UF 6.3V 20% 2125
C416 10UF 6.3V 20% 2125
C677 10UF 6.3V 20% 2125
1
2
GND
GND

10UF X5R 2125 1/16W X16PCS

DESIGNER	Y.I	11/21/03	PART NO. 13R1088 IBM
CHECKED	Y.Y	11/21/03	TITLE ROME-1 RWK(V099)
APPROVED	K.T	11/21/03	VCCCPUCORE DECOUPLING
CLASS	K.T	11/21/03	

IBM CONFIDENTIAL

REL	DATE 11/21/03	EC NO. J45843A

PART NO. 13R1088

DEVELOPMENT NO.

Q/M 8 /82

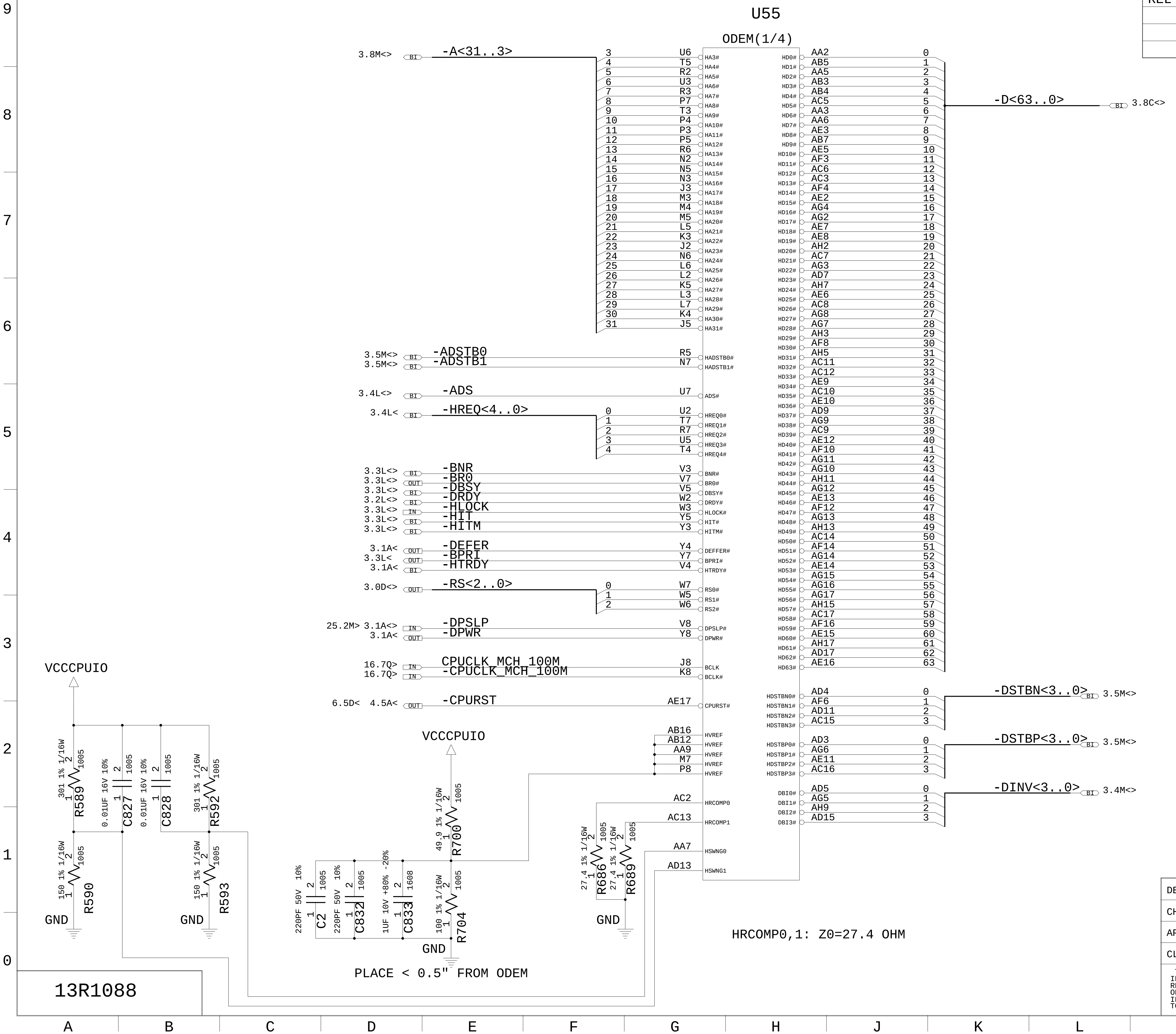
U55
ODEM(1/4)
3.8M<> BI -A<31..3>
3 U6 HA3#
4 T5 HA4#
5 R2 HA5#
6 U3 HA6#
7 R3 HA7#
8 P7 HA8#
9 T3 HA9#
10 P4 HA10#
11 P3 HA11#
12 P5 HA12#
13 R6 HA13#
14 N2 HA14#
15 N5 HA15#
16 N3 HA16#
17 J3 HA17#
18 M3 HA18#
19 M4 HA19#
20 M5 HA20#
21 L5 HA21#
22 K3 HA22#
23 J2 HA23#
24 N6 HA24#
25 L6 HA25#
26 L2 HA26#
27 K5 HA27#
28 L3 HA28#
29 L7 HA29#
30 K4 HA30#
31 J5 HA31#
3.5M<> BI -ADSTB0 R5 HADSTB0#
3.5M<> BI -ADSTB1 N7 HADSTB1#
3.4L<> BI -ADS U7 ADS#
3.4L< BI -HREQ<4..0>
0 U2 HREQ0#
1 T7 HREQ1#
2 R7 HREQ2#
3 U5 HREQ3#
4 T4 HREQ4#
3.3L<> BI -BNR V3 BNR#
3.3L<> OUT -BR0 V7 BR0#
3.3L<> BI -DBSY V5 DBSY#
3.2L<> BI -DRDY W2 DRDY#
3.3L<> IN -HLOCK W3 HLOCK#
3.3L<> BI -HIT Y5 HIT#
3.3L<> BI -HITM Y3 HITM#
3.1A< OUT -DEFER Y4 DEFFER#
3.3L< OUT -BPRI Y7 BPRI#
3.1A< BI -HTRDY V4 HTRDY#
3.0D<> OUT -RS<2..0>
0 W7 RS0#
1 W5 RS1#
2 W6 RS2#
25.2M> 3.1A<> IN -DPSLP V8 DPSLP#
3.1A< OUT -DPWR Y8 DPWR#
16.7Q> IN CPUCLK_MCH_100M J8 BCLK
16.7Q> IN -CPUCLK_MCH_100M K8 BCLK#
6.5D< 4.5A< OUT -CPURST AE17 CPURST#
AB16 HVREF
AB12 HVREF
AA9 HVREF
M7 HVREF
P8 HVREF
AC2 HRCOMP0
AC13 HRCOMP1
AA7 HSWNG0
AD13 HSWNG1
HD0# AA2 0
HD1# AB5 1
HD2# AA5 2
HD3# AB3 3
HD4# AB4 4
HD5# AC5 5
HD6# AA3 6
HD7# AA6 7
HD8# AE3 8
HD9# AB7 9
HD10# AE5 10
HD11# AF3 11
HD12# AC6 12
HD13# AC3 13
HD14# AF4 14
HD15# AE2 15
HD16# AG4 16
HD17# AE7 17
HD18# AE8 18
HD19# AG2 19
HD20# AH2 20
HD21# AC7 21
HD22# AG3 22
HD23# AD7 23
HD24# AH7 24
HD25# AE6 25
HD26# AC8 26
HD27# AG8 27
HD28# AG7 28
HD29# AH3 29
HD30# AF8 30
HD31# AH5 31
HD32# AC11 32
HD33# AC12 33
HD34# AE9 34
HD35# AC10 35
HD36# AE10 36
HD37# AD9 37
HD38# AG9 38
HD39# AC9 39
HD40# AE12 40
HD41# AF10 41
HD42# AG11 42
HD43# AG10 43
HD44# AH11 44
HD45# AG12 45
HD46# AE13 46
HD47# AF12 47
HD48# AG13 48
HD49# AH13 49
HD50# AC14 50
HD51# AF14 51
HD52# AG14 52
HD53# AE14 53
HD54# AG15 54
HD55# AG16 55
HD56# AG17 56
HD57# AH15 57
HD58# AC17 58
HD59# AF16 59
HD60# AE15 60
HD61# AH17 61
HD62# AD17 62
HD63# AE16 63
-D<63..0> BI 3.8C<>
HDSTBN0# AD4 0
HDSTBN1# AF6 1
HDSTBN2# AD11 2
HDSTBN3# AC15 3
-DSTBN<3..0> BI 3.5M<>
HDSTBP0# AD3 0
HDSTBP1# AG6 1
HDSTBP2# AE11 2
HDSTBP3# AC16 3
-DSTBP<3..0> BI 3.5M<>
DBI0# AD5 0
DBI1# AG5 1
DBI2# AH9 2
DBI3# AD15 3
-DINV<3..0> BI 3.4M<>
VCCCPUIO
301 1% 1/16W 1005 R589
0.01UF 16V 10% 1005 C827
0.01UF 16V 10% 1005 C828
301 1% 1/16W 1005 R592
150 1% 1/16W 1005 R590
150 1% 1/16W 1005 R593
GND
GND
VCCCPUIO
49.9 1% 1/16W 1005 R700
100 1% 1/16W 1005 R704
220PF 50V 10% 1005 C2
220PF 50V 10% 1005 C832
1UF 10V +80% -20% 1608 C833
GND
PLACE < 0.5" FROM ODEM
27.4 1% 1/16W 1005 R686
27.4 1% 1/16W 1005 R689
GND
HRCOMP0,1: Z0=27.4 OHM

13R1088

DESIGNER	Y.I	11/21/03
CHECKED	Y.Y	11/21/03
APPROVED	K.T	11/21/03
CLASS	K.T	11/21/03

PART NO. 13R1088

IBM

TITLE ROME-1 RWK(V099)

MCH-M(1/4):HOST I/F

THIS DOCUMENT IS THE PROPERTY OF IBM ITS USE IS AUTHORIZED ONLY FOR RESPONDING TO A REQUEST FOR QUOTATION OR FOR THE PERFORMANCE OF WORK FOR IBM. ALL QUESTIONS MUST BE REFERRED TO THE IBM PURCHASING DEPARTMENT.

IBM CONFIDENTIAL

	DATE	EC NO.
REL	11/21/03	J45843A

PART NO. 13R1088

DEVELOPMENT NO.

Q/M 9 /82

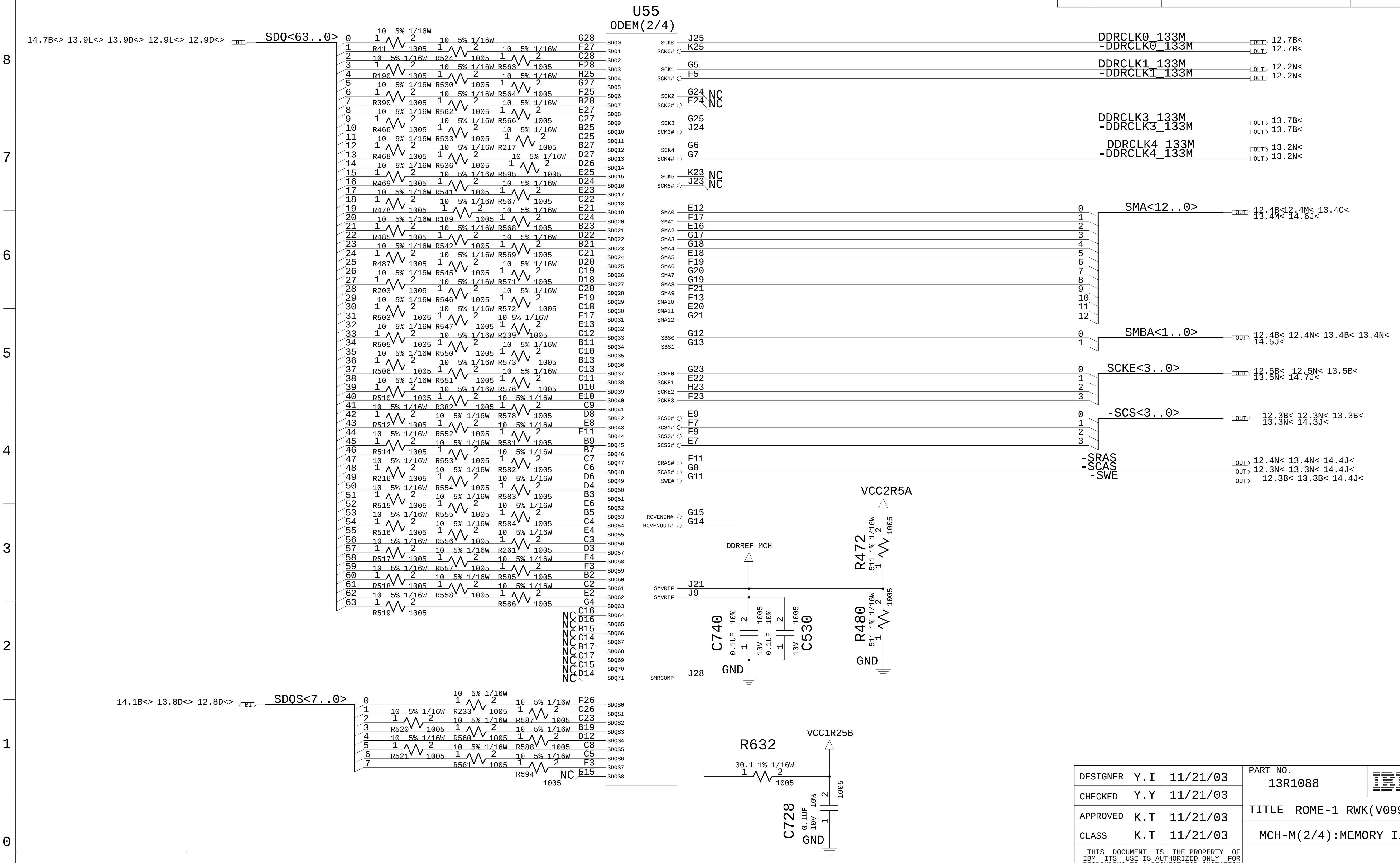

U55
ODEM(2/4)
14.7B<> 13.9L<> 13.9D<> 12.9L<> 12.9D<>
BI
SDQ<63..0>
10 5% 1/16W
1005
R41 R524 R563 R190 R530 R564 R390 R562 R566 R466 R533 R217 R468 R536 R595 R469 R541 R567 R478 R189 R568 R485 R542 R569 R487 R545 R571 R203 R546 R572 R503 R547 R239 R505 R550 R573 R506 R551 R576 R510 R382 R578 R512 R552 R581 R514 R553 R582 R216 R554 R583 R515 R555 R584 R516 R556 R261 R517 R557 R585 R518 R558 R586 R519
G28 F27 C28 E28 H25 G27 F25 B28 E27 C27 B25 C25 B27 D27 D26 E25 D24 E23 C22 E21 C24 B23 D22 B21 C21 D20 C19 D18 C20 E19 C18 E17 E13 C12 B11 C10 B13 C13 C11 D10 E10 C9 D8 E8 E11 B9 B7 C7 C6 D6 D4 B3 E6 B5 C4 E4 C3 D3 F4 F3 B2 C2 E2 G4
SDQ0 … SDQ71
NC C16 D16 B15 C14 B17 C17 C15 D14
14.1B<> 13.8D<> 12.8D<>
SDQS<7..0>
R233 R587 R520 R560 R588 R521 R561 R594
F26 C26 C23 B19 D12 C8 C5 E3 E15
SDQS0 … SDQS8
NC
SCK0 J25 DDRCLK0_133M OUT 12.7B<
SCK0# K25 -DDRCLK0_133M OUT 12.7B<
SCK1 G5 DDRCLK1_133M OUT 12.2N<
SCK1# F5 -DDRCLK1_133M OUT 12.2N<
SCK2 G24 NC
SCK2# E24 NC
SCK3 G25 DDRCLK3_133M OUT 13.7B<
SCK3# J24 -DDRCLK3_133M OUT 13.7B<
SCK4 G6 DDRCLK4_133M OUT 13.2N<
SCK4# G7 -DDRCLK4_133M OUT 13.2N<
SCK5 K23 NC
SCK5# J23 NC
SMA0–SMA12: E12 F17 E16 G17 G18 E18 F19 G20 G19 F21 F13 E20 G21
SMA<12..0> OUT 12.4B<12.4M< 13.4C< 13.4M< 14.6J<
SBS0 G12, SBS1 G13
SMBA<1..0> OUT 12.4B< 12.4N< 13.4B< 13.4N< 14.5J<
SCKE0 G23, SCKE1 E22, SCKE2 H23, SCKE3 F23
SCKE<3..0> OUT 12.5B< 12.5N< 13.5B< 13.5N< 14.7J<
SCS0# E9, SCS1# F7, SCS2# F9, SCS3# E7
-SCS<3..0> OUT 12.3B< 12.3N< 13.3B< 13.3N< 14.3J<
SRAS# F11 -SRAS OUT 12.4N< 13.4N< 14.4J<
SCAS# G8 -SCAS OUT 12.3N< 13.3N< 14.4J<
SWE# G11 -SWE OUT 12.3B< 13.3B< 14.4J<
RCVENIN# G15
RCVENOUT# G14
VCC2R5A
R472 511 1% 1/16W 1005
R480 511 1% 1/16W 1005
GND
DDRREF_MCH
SMVREF J21
SMVREF J9
C740 0.1UF 10% 10V 1005
C530 0.1UF 10% 10V 1005
GND
SMRCOMP J28
R632 30.1 1% 1/16W 1005
VCC1R25B
C728 0.1UF 10% 10V 1005
GND

DESIGNER	Y.I	11/21/03
CHECKED	Y.Y	11/21/03
APPROVED	K.T	11/21/03
CLASS	K.T	11/21/03

PART NO. 13R1088

IBM

TITLE ROME-1 RWK(V099)

MCH-M(2/4):MEMORY I/F

THIS DOCUMENT IS THE PROPERTY OF IBM ITS USE IS AUTHORIZED ONLY FOR RESPONDING TO A REQUEST FOR QUOTATION OR FOR THE PERFORMANCE OF WORK FOR IBM. ALL QUESTIONS MUST BE REFERRED TO THE IBM PURCHASING DEPARTMENT.

IBM CONFIDENTIAL

13R1088

REL	DATE 11/21/03	EC NO. J45843A

PART NO. 13R1088

DEVELOPMENT NO.

Q/M 10 /82

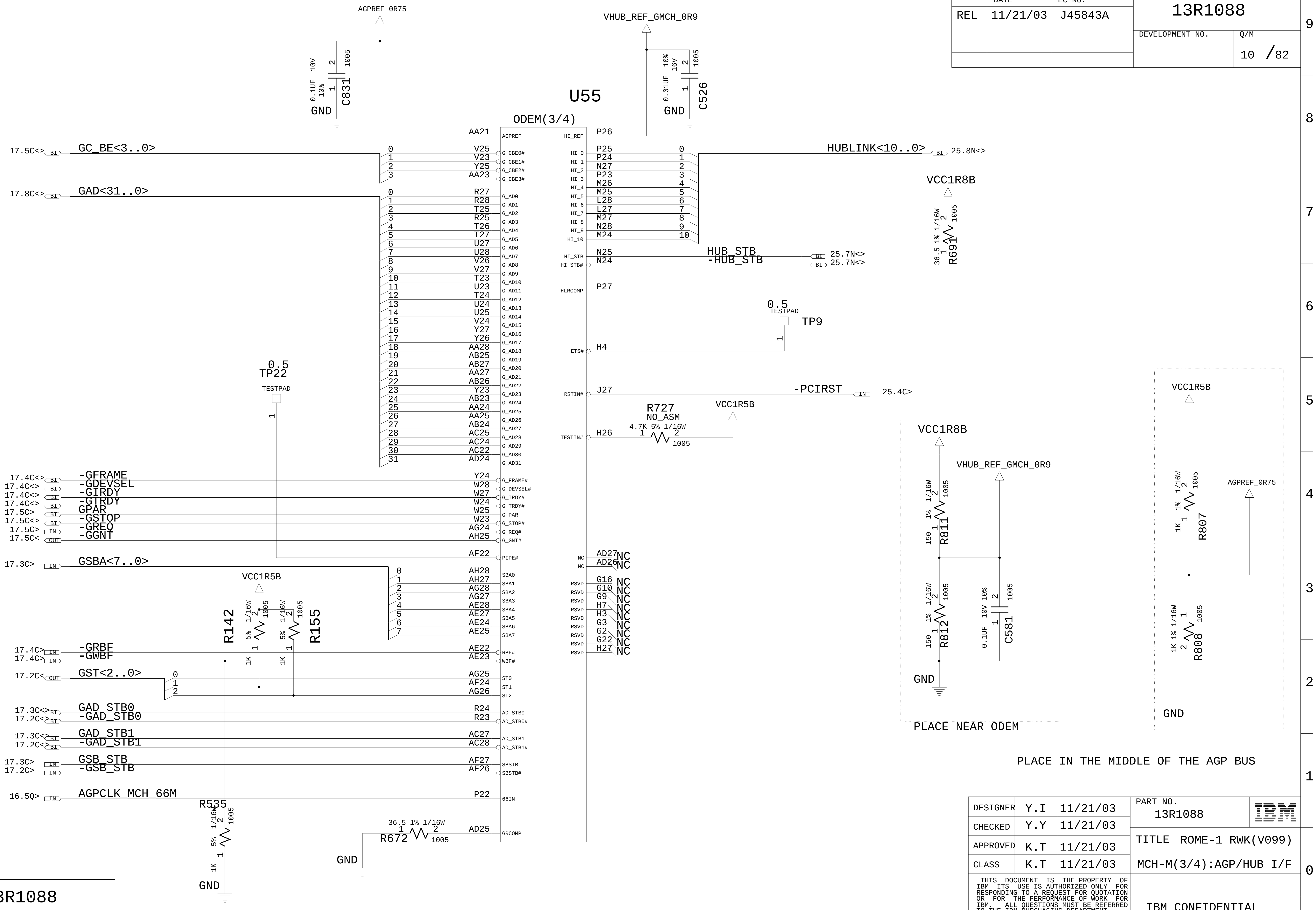

U55
ODEM(3/4)
AGPREF_0R75
VHUB_REF_GMCH_0R9
C831 0.1UF 10% 10V 1005
C526 0.01UF 10% 16V 1005
GND
GC_BE<3..0>
GAD<31..0>
HUBLINK<10..0>
HUB_STB
-HUB_STB
VCC1R8B
R691 36.5 1% 1/16W 1005
HLRCOMP
TP9 TESTPAD 0.5
ETS#
-PCIRST
RSTIN#
R727 NO_ASM 4.7K 5% 1/16W 1005
VCC1R5B
TESTIN#
TP22 TESTPAD 0.5
-GFRAME
-GDEVSEL
-GIRDY
-GTRDY
GPAR
-GSTOP
-GREQ
-GGNT
GSBA<7..0>
PIPE#
R142 1K 5% 1/16W 1005
R155 1K 5% 1/16W 1005
-GRBF
-GWBF
GST<2..0>
GAD_STB0
-GAD_STB0
GAD_STB1
-GAD_STB1
GSB_STB
-GSB_STB
AGPCLK_MCH_66M
R535 1K 5% 1/16W 1005
R672 36.5 1% 1/16W 1005
GRCOMP
NC
RSVD
R811 150 1% 1/16W 1005
R812 150 1% 1/16W 1005
C581 0.1UF 10V 10% 1005
PLACE NEAR ODEM
R807 1K 1% 1/16W 1005
R808 1K 1% 1/16W 1005
PLACE IN THE MIDDLE OF THE AGP BUS
17.5C<>
17.8C<>
17.4C<>
17.5C>
17.5C<
17.3C>
17.4C>
17.2C<
17.3C<>
17.2C<>
17.2C>
16.5Q>
25.8N<>
25.7N<>
25.4C>

DESIGNER	Y.I	11/21/03
CHECKED	Y.Y	11/21/03
APPROVED	K.T	11/21/03
CLASS	K.T	11/21/03

PART NO. 13R1088

IBM

TITLE ROME-1 RWK(V099)

MCH-M(3/4):AGP/HUB I/F

THIS DOCUMENT IS THE PROPERTY OF IBM ITS USE IS AUTHORIZED ONLY FOR RESPONDING TO A REQUEST FOR QUOTATION OR FOR THE PERFORMANCE OF WORK FOR IBM. ALL QUESTIONS MUST BE REFERRED TO THE IBM PURCHASING DEPARTMENT.

IBM CONFIDENTIAL

13R1088

REL	DATE 11/21/03	EC NO. J45843A

PART NO. 13R1088

DEVELOPMENT NO.

Q/M 11 /82

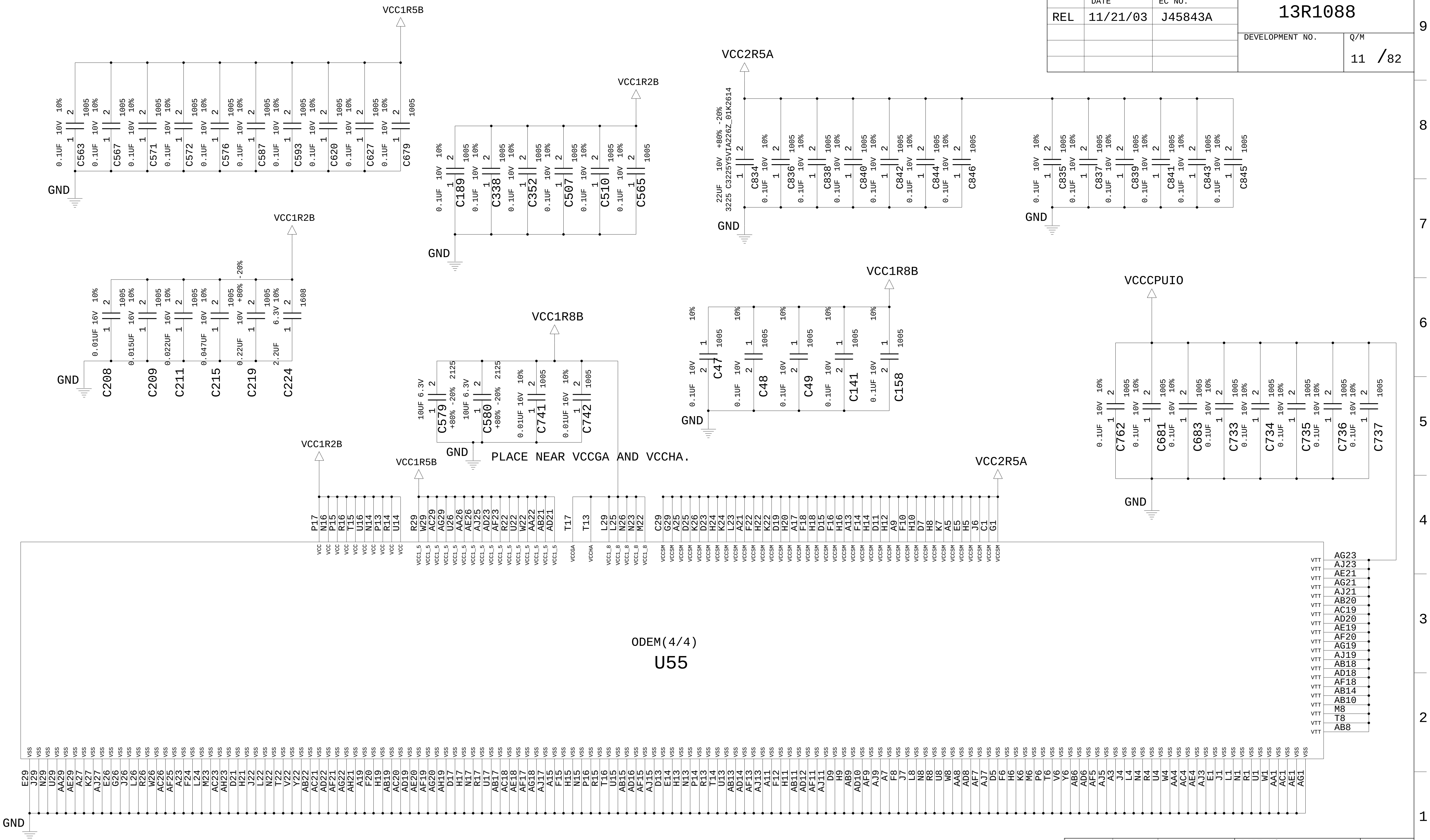

VCC1R5B
C563 C567 C571 C572 C576 C587 C593 C620 C627 C679
0.1UF 10V 10% 1005
GND
VCC1R2B
C189 C338 C352 C507 C510 C565
0.1UF 10V 10% 1005
GND
VCC2R5A
C834 22UF 10V +80% -20% 3225 C3225Y5V1A226Z_01K2614
C836 C838 C840 C842 C844 C846
C835 C837 C839 C841 C843 C845
0.1UF 10V 10% 1005
GND
VCC1R2B
C208 0.01UF 16V 10% 1005
C209 0.015UF 16V 10% 1005
C211 0.022UF 16V 10% 1005
C215 0.047UF 10V 10% 1005
C219 0.22UF 10V +80% -20% 1005
C224 2.2UF 6.3V 10% 1608
GND
VCC1R8B
C579 10UF 6.3V +80% -20% 2125
C580 10UF 6.3V +80% -20% 2125
C741 0.01UF 16V 10% 1005
C742 0.01UF 16V 10% 1005
GND
PLACE NEAR VCCGA AND VCCHA.
VCC1R8B
C47 C48 C49 C141 C158
0.1UF 10V 10% 1005
GND
VCCCPUIO
C762 C681 C683 C733 C734 C735 C736 C737
0.1UF 10V 10% 1005
GND
VCC1R2B
P17 N16 P15 R16 T15 U16 N14 P13 R14 U14
VCC
VCC1R5B
R29 W29 AC29 AG29 U26 AA26 AE26 AJ25 AD23 AF23 R22 U22 W22 AA22 AB21 AD21
VCC1_5
T17 VCCGA
T13 VCCHA
L29 L25 N26 N23 M22
VCC1_8
VCC2R5A
C29 G29 A25 D25 K26 D23 H24 K24 L23 A21 F22 H22 K22 D19 H20 A17 F18 H18 D15 F16 H16 A13 F14 H14 D11 H12 A9 F10 H10 D7 H8 K7 A5 E5 H5 J6 C1 G1
VCCSM
ODEM(4/4)
U55
VTT
AG23 AJ23 AE21 AG21 AJ21 AB20 AC19 AD20 AE19 AF20 AG19 AJ19 AB18 AD18 AF18 AB14 AB10 M8 T8 AB8
VSS
E29 J29 N29 U29 AA29 AE29 A27 K27 AJ27 E26 G26 J26 L26 R26 W26 AC26 AF25 A23 F24 L24 M23 AC23 AH23 D21 H21 J22 L22 N22 T22 V22 Y22 AB22 AC21 AD22 AF21 AG22 AH21 A19 F20 H19 AB19 AC20 AD19 AE20 AF19 AG20 AH19 D17 H17 N17 R17 U17 AB17 AC18 AE18 AF17 AG18 AJ17 A15 F15 H15 N15 P16 R15 T16 U15 AB15 AD16 AF15 AJ15 D13 E14 H13 N13 P14 R13 T14 U13 AB13 AD14 AF13 AJ13 A11 F12 H11 AB11 AD12 AF11 AJ11 D9 H9 AB9 AD10 AF9 AJ9 A7 F8 J7 L8 N8 R8 U8 W8 AA8 AD8 AF7 AJ7 D5 F6 H6 K6 M6 P6 T6 V6 Y6 AB6 AD6 AF5 AJ5 A3 J4 L4 N4 R4 U4 W4 AA4 AC4 AE4 AJ3 E1 J1 L1 N1 R1 U1 W1 AA1 AC1 AE1 AG1
GND

DESIGNER	Y.I	11/21/03
CHECKED	Y.Y	11/21/03
APPROVED	K.T	11/21/03
CLASS	K.T	11/21/03

PART NO. 13R1088

IBM

TITLE ROME-1 RWK(V099)

MCH-M(4/4):VCC/GND

IBM CONFIDENTIAL

13R1088

REL	DATE	EC NO.
REL	11/21/03	J45843A

PART NO. 13R1088

DEVELOPMENT NO.

Q/M 12 /82

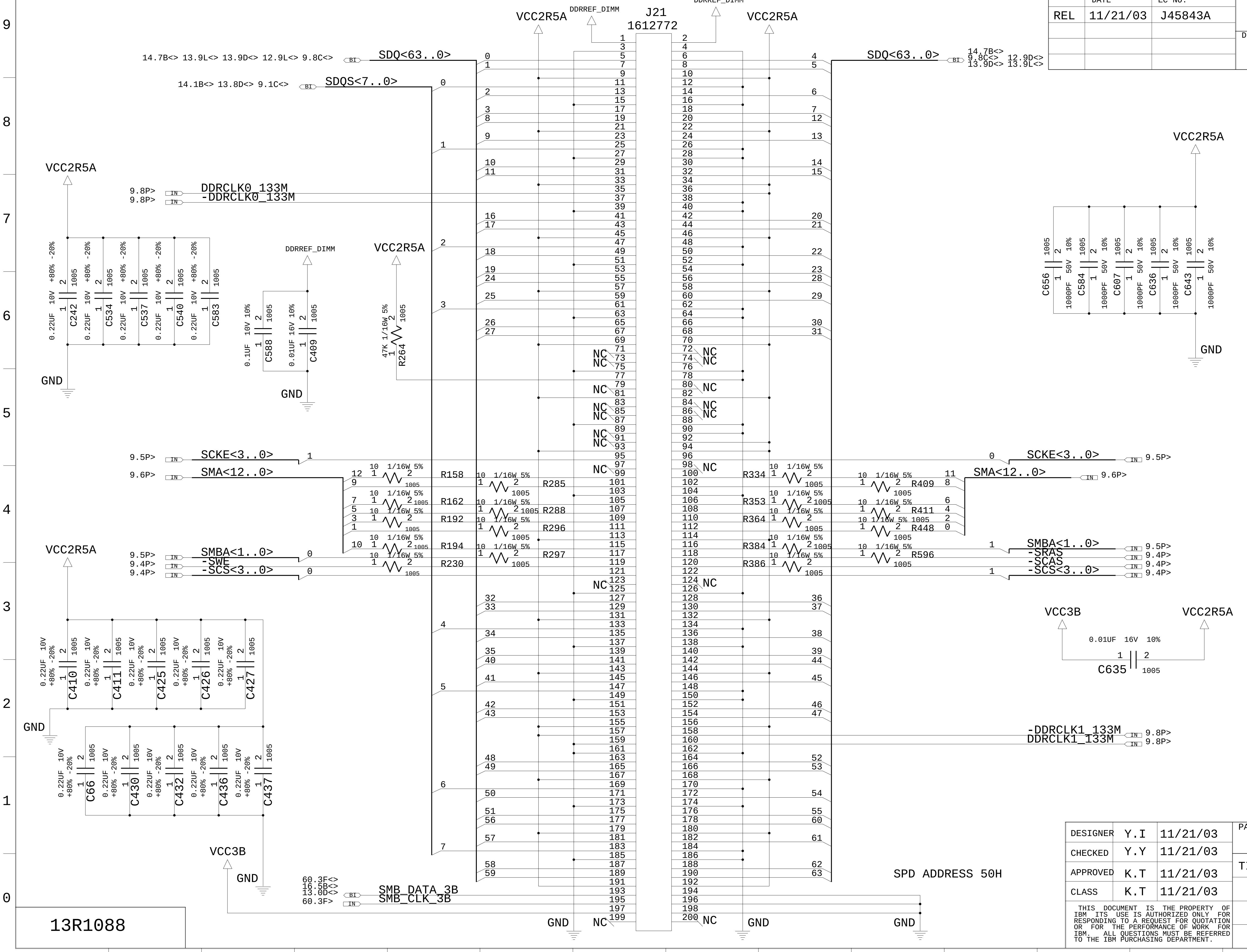

J21
1612772
VCC2R5A
DDREF_DIMM
14.7B<> 13.9L<> 13.9D<> 12.9L<> 9.8C<>
SDQ<63..0>
14.1B<> 13.8D<> 9.1C<>
SDQS<7..0>
14.7B<> 9.8C<> 12.9D<> 13.9D<> 13.9L<>
9.8P> DDRCLK0_133M
9.8P> -DDRCLK0_133M
C242 C534 C537 C540 C583
0.22UF 10V +80% -20% 1005
C588 0.1UF 10V 10% 1005
C409 0.01UF 16V 10% 1005
R264 47K 1/16W 5% 1005
C656 C584 C607 C636 C643
1000PF 50V 10% 1005
GND
NC
9.5P> SCKE<3..0>
9.6P> SMA<12..0>
R158 R162 R192 R194 R230
R285 R288 R296 R297
R334 R353 R364 R384 R386
R409 R411 R448 R596
10 1/16W 5% 1005
9.5P> SMBA<1..0>
9.4P> -SWE
9.4P> -SCS<3..0>
-SRAS
-SCAS
VCC3B
C635 0.01UF 16V 10% 1005
C410 C411 C425 C426 C427
C66 C430 C432 C436 C437
0.22UF 10V +80% -20% 1005
-DDRCLK1_133M 9.8P>
DDRCLK1_133M 9.8P>
60.3F<> 16.5B<> 13.0D<> SMB_DATA_3B
60.3F> SMB_CLK_3B
SPD ADDRESS 50H

13R1088

DESIGNER	Y.I	11/21/03
CHECKED	Y.Y	11/21/03
APPROVED	K.T	11/21/03
CLASS	K.T	11/21/03

PART NO. 13R1088

IBM

TITLE ROME-1 RWK(V099)

DDR DIMM CONNECTOR 0

STANDARD TYPE

IBM CONFIDENTIAL

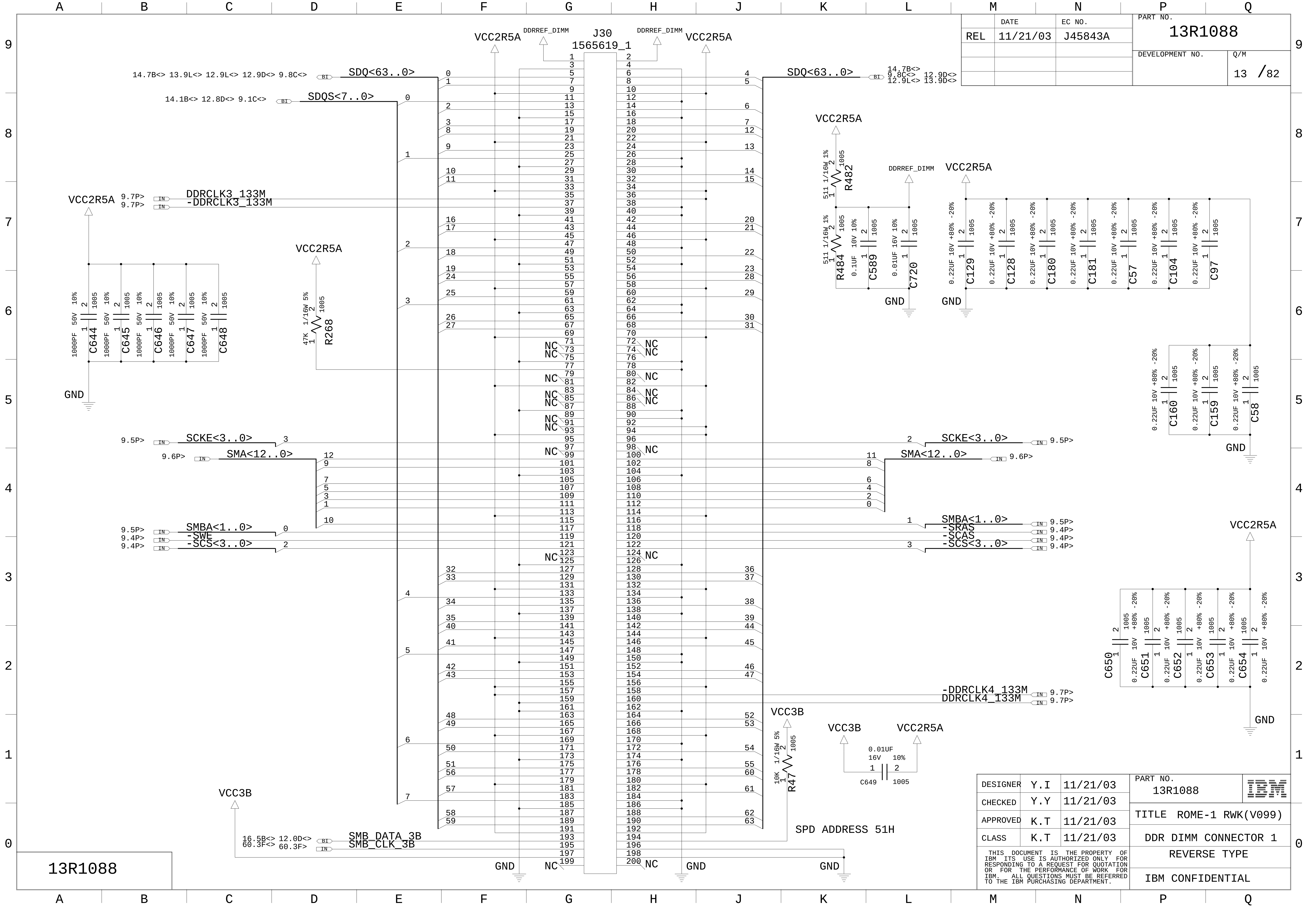
J30
1565619_1
VCC2R5A
DDRREF_DIMM
SDQ<63..0>
14.7B<> 13.9L<> 12.9L<> 12.9D<> 9.8C<>
SDQS<7..0>
14.1B<> 12.8D<> 9.1C<>
14.7B<> 9.8C<> 12.9D<> 12.9L<> 13.9D<>
DDRCLK3_133M
-DDRCLK3_133M
9.7P>
SCKE<3..0>
9.5P>
SMA<12..0>
9.6P>
SMBA<1..0>
-SWE
-SCS<3..0>
-SRAS
-SCAS
9.4P>
-DDRCLK4_133M
DDRCLK4_133M
SMB_DATA_3B
SMB_CLK_3B
16.5B<> 12.0D<>
60.3F<> 60.3F>
VCC3B
GND
NC
R268 47K 1/16W 5% 1005
C644 C645 C646 C647 C648 1000PF 50V 10% 1005
R482 511 1/16W 1%
R484 511 1/16W 1%
C589 0.1UF 10V 10%
C720 0.01UF 16V 10%
C129 C128 C180 C181 C57 C104 C97 0.22UF 10V +80% -20%
C160 C159 C58 0.22UF 10V +80% -20%
C650 C651 C652 C653 C654 0.22UF 10V +80% -20%
R47 10K 1/16W 5% 1005
C649 0.01UF 16V 10% 1005
SPD ADDRESS 51H

REL	DATE	EC NO.
REL	11/21/03	J45843A

PART NO. 13R1088

DEVELOPMENT NO.

Q/M 13 /82

DESIGNER	Y.I	11/21/03
CHECKED	Y.Y	11/21/03
APPROVED	K.T	11/21/03
CLASS	K.T	11/21/03

PART NO. 13R1088

IBM

TITLE ROME-1 RWK(V099)

DDR DIMM CONNECTOR 1

REVERSE TYPE

IBM CONFIDENTIAL

13R1088

	DATE	EC NO.
REL	11/21/03	J45843A

PART NO.
13R1088

DEVELOPMENT NO.

Q/M
14 /82

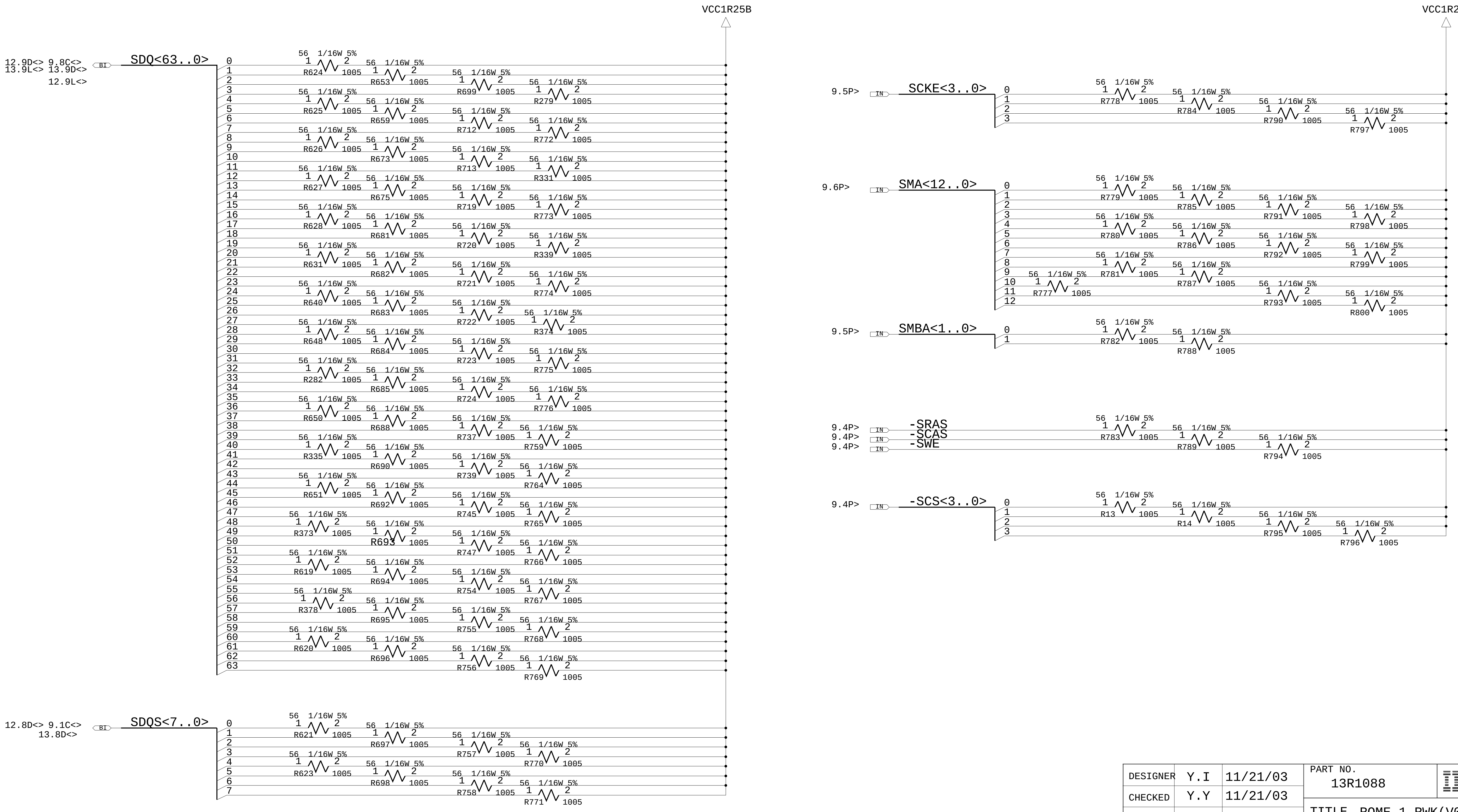

VCC1R25B
12.9D<> 9.8C<>
13.9L<> 13.9D<>
12.9L<>
BI
SDQ<63..0>
0 1 2 3 4 5 6 7 8 9 10 11 12 13 14 15 16 17 18 19 20 21 22 23 24 25 26 27 28 29 30 31 32 33 34 35 36 37 38 39 40 41 42 43 44 45 46 47 48 49 50 51 52 53 54 55 56 57 58 59 60 61 62 63
56 1/16W 5%
1
2
1005
R624
R653
R699
R279
R625
R659
R712
R772
R626
R673
R713
R331
R627
R675
R719
R773
R628
R681
R720
R339
R631
R682
R721
R774
R640
R683
R722
R374
R648
R684
R723
R775
R282
R685
R724
R776
R650
R688
R737
R759
R335
R690
R739
R764
R651
R692
R745
R765
R373
R693
R747
R766
R619
R694
R754
R767
R378
R695
R755
R768
R620
R696
R756
R769
12.8D<> 9.1C<>
13.8D<>
SDQS<7..0>
0 1 2 3 4 5 6 7
R621
R697
R757
R770
R623
R698
R758
R771
VCC1R25B
9.5P>
IN
SCKE<3..0>
0 1 2 3
R778
R784
R790
R797
9.6P>
SMA<12..0>
0 1 2 3 4 5 6 7 8 9 10 11 12
R779
R785
R791
R798
R780
R786
R792
R799
R781
R787
R777
R793
R800
9.5P>
SMBA<1..0>
0 1
R782
R788
9.4P>
9.4P>
9.4P>
-SRAS
-SCAS
-SWE
R783
R789
R794
9.4P>
-SCS<3..0>
0 1 2 3
R13
R14
R795
R796

13R1088

DESIGNER	Y.I	11/21/03
CHECKED	Y.Y	11/21/03
APPROVED	K.T	11/21/03
CLASS	K.T	11/21/03

PART NO.
13R1088

TITLE ROME-1 RWK(V099)

SSTL-2 TERMINATION

IBM CONFIDENTIAL

	DATE	EC NO.
REL	11/21/03	J45843A

PART NO. 13R1088

DEVELOPMENT NO.

Q/M 15 /82

PLACE 1 CAP FOR EVERY 2 BITS TERMINATED TO VCC1R25B.

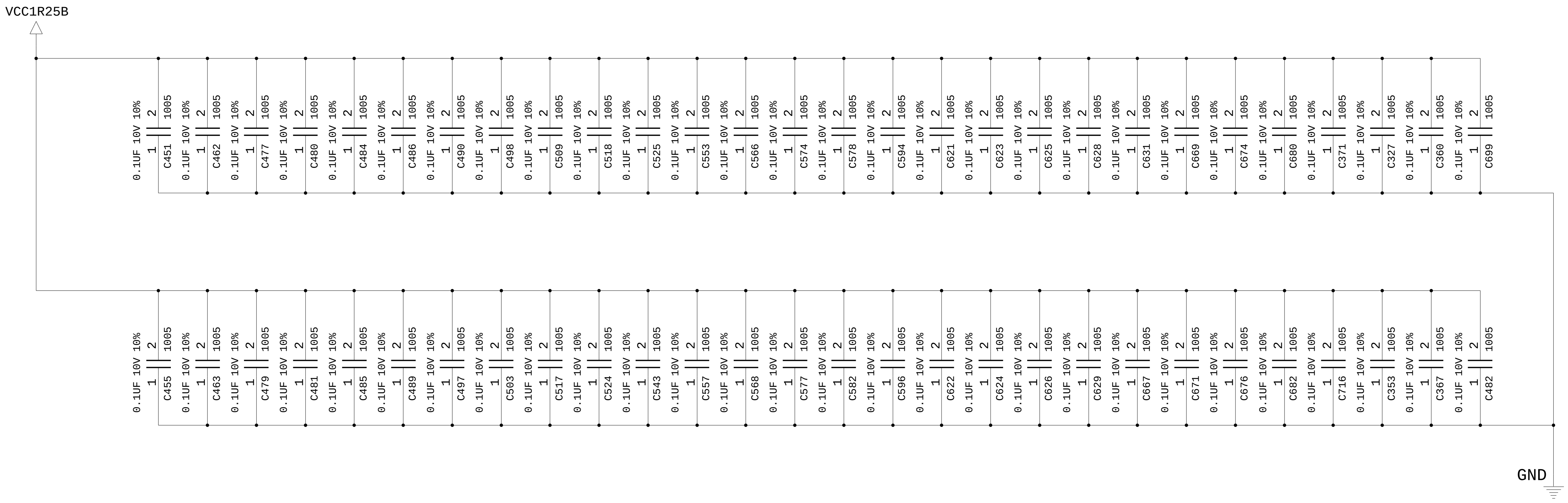
VCC1R25B
C451 0.1UF 10V 10% 1005 1 2
C462 0.1UF 10V 10% 1005 1 2
C477 0.1UF 10V 10% 1005 1 2
C480 0.1UF 10V 10% 1005 1 2
C484 0.1UF 10V 10% 1005 1 2
C486 0.1UF 10V 10% 1005 1 2
C490 0.1UF 10V 10% 1005 1 2
C498 0.1UF 10V 10% 1005 1 2
C509 0.1UF 10V 10% 1005 1 2
C518 0.1UF 10V 10% 1005 1 2
C525 0.1UF 10V 10% 1005 1 2
C553 0.1UF 10V 10% 1005 1 2
C566 0.1UF 10V 10% 1005 1 2
C574 0.1UF 10V 10% 1005 1 2
C578 0.1UF 10V 10% 1005 1 2
C594 0.1UF 10V 10% 1005 1 2
C621 0.1UF 10V 10% 1005 1 2
C623 0.1UF 10V 10% 1005 1 2
C625 0.1UF 10V 10% 1005 1 2
C628 0.1UF 10V 10% 1005 1 2
C631 0.1UF 10V 10% 1005 1 2
C669 0.1UF 10V 10% 1005 1 2
C674 0.1UF 10V 10% 1005 1 2
C680 0.1UF 10V 10% 1005 1 2
C371 0.1UF 10V 10% 1005 1 2
C327 0.1UF 10V 10% 1005 1 2
C360 0.1UF 10V 10% 1005 1 2
C699 0.1UF 10V 10% 1005 1 2
C455 0.1UF 10V 10% 1005 1 2
C463 0.1UF 10V 10% 1005 1 2
C479 0.1UF 10V 10% 1005 1 2
C481 0.1UF 10V 10% 1005 1 2
C485 0.1UF 10V 10% 1005 1 2
C489 0.1UF 10V 10% 1005 1 2
C497 0.1UF 10V 10% 1005 1 2
C503 0.1UF 10V 10% 1005 1 2
C517 0.1UF 10V 10% 1005 1 2
C524 0.1UF 10V 10% 1005 1 2
C543 0.1UF 10V 10% 1005 1 2
C557 0.1UF 10V 10% 1005 1 2
C568 0.1UF 10V 10% 1005 1 2
C577 0.1UF 10V 10% 1005 1 2
C582 0.1UF 10V 10% 1005 1 2
C596 0.1UF 10V 10% 1005 1 2
C622 0.1UF 10V 10% 1005 1 2
C624 0.1UF 10V 10% 1005 1 2
C626 0.1UF 10V 10% 1005 1 2
C629 0.1UF 10V 10% 1005 1 2
C667 0.1UF 10V 10% 1005 1 2
C671 0.1UF 10V 10% 1005 1 2
C676 0.1UF 10V 10% 1005 1 2
C682 0.1UF 10V 10% 1005 1 2
C716 0.1UF 10V 10% 1005 1 2
C353 0.1UF 10V 10% 1005 1 2
C367 0.1UF 10V 10% 1005 1 2
C482 0.1UF 10V 10% 1005 1 2
GND

DESIGNER	Y.I	11/21/03
CHECKED	Y.Y	11/21/03
APPROVED	K.T	11/21/03
CLASS	K.T	11/21/03

PART NO. 13R1088

IBM

TITLE ROME-1 RWK(V099)

SSTL-2 DECOUPLING

IBM CONFIDENTIAL

REL	DATE	EC NO.
REL	11/21/03	J45843A

PART NO. 13R1088

DEVELOPMENT NO.

Q/M 16 /82

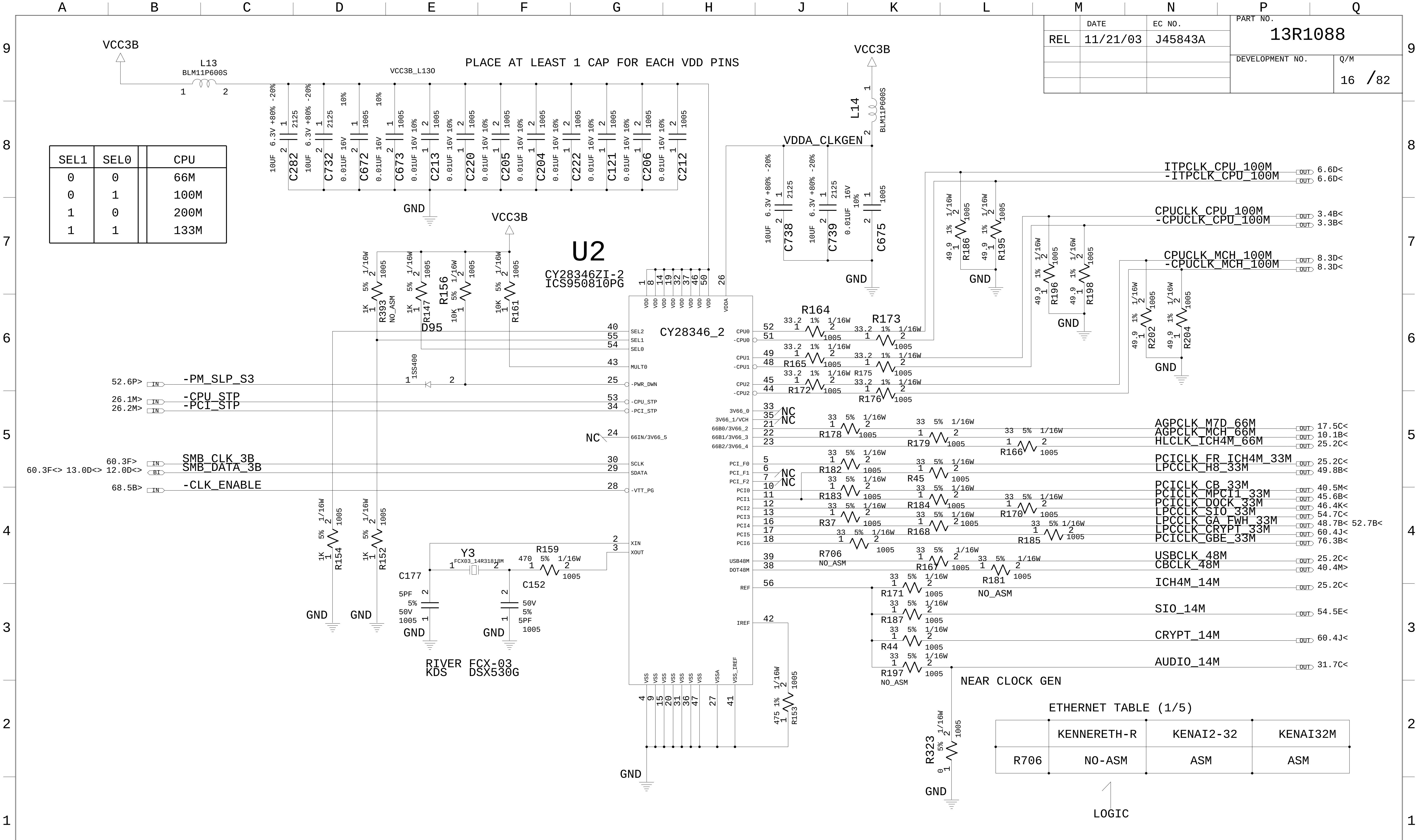

VCC3B
L13
BLM11P600S
VCC3B_L130
PLACE AT LEAST 1 CAP FOR EACH VDD PINS
10UF 6.3V +80% -20% 2125 C282
10UF 6.3V +80% -20% 2125 C732
0.01UF 16V 10% 1005 C672
0.01UF 16V 10% 1005 C673
0.01UF 16V 10% 1005 C213
0.01UF 16V 10% 1005 C220
0.01UF 16V 10% 1005 C205
0.01UF 16V 10% 1005 C204
0.01UF 16V 10% 1005 C222
0.01UF 16V 10% 1005 C121
0.01UF 16V 10% 1005 C206
0.01UF 16V 10% 1005 C212
GND
VCC3B
L14
BLM11P600S
VDDA_CLKGEN
C738
C739
C675
U2
CY28346ZI-2
ICS950810PG
CY28346_2
R393 1K 5% 1/16W 1005 NO_ASM
R147 1K 5% 1/16W 1005
R156 10K 5% 1/16W 1005
R161 10K 5% 1/16W 1005
D95 1SS400
SEL2 SEL1 SEL0 MULT0
-PWR_DWN -CPU_STP -PCI_STP 66IN/3V66_5 SCLK SDATA -VTT_PG XIN XOUT
52.6P> -PM_SLP_S3
26.1M> -CPU_STP
26.2M> -PCI_STP
NC
60.3F> SMB_CLK_3B
60.3F<> 13.0D<> 12.0D<> SMB_DATA_3B
68.5B> -CLK_ENABLE
R154 1K 5% 1/16W 1005
R152 1K 5% 1/16W 1005
Y3 FCX03_14R3181BM
R159 470 5% 1/16W 1005
C177 5PF 5% 50V 1005
C152 50V 5% 5PF 1005
RIVER FCX-03
KDS DSX530G
R153 475 1% 1/16W 1005
VSS VSSA VSS_IREF IREF REF
R164 R173 R165 R175 R172 R176 33.2 1% 1/16W 1005
CPU0 -CPU0 CPU1 -CPU1 CPU2 -CPU2
R186 R195 R196 R198 R202 R204 49.9 1% 1/16W 1005
ITPCLK_CPU_100M 6.6D<
-ITPCLK_CPU_100M 6.6D<
CPUCLK_CPU_100M 3.4B<
-CPUCLK_CPU_100M 3.3B<
CPUCLK_MCH_100M 8.3D<
-CPUCLK_MCH_100M 8.3D<
3V66_0 3V66_1/VCH 66B0/3V66_2 66B1/3V66_3 66B2/3V66_4
R178 R179 R166 33 5% 1/16W 1005
AGPCLK_M7D_66M 17.5C<
AGPCLK_MCH_66M 10.1B<
HLCLK_ICH4M_66M 25.2C<
PCI_F0 PCI_F1 PCI_F2 PCI0 PCI1 PCI2 PCI3 PCI4 PCI5 PCI6
R182 R45 R183 R184 R170 R37 R168 R185 33 5% 1/16W 1005
PCICLK_FR_ICH4M_33M 25.2C<
LPCCLK_H8_33M 49.8B<
PCICLK_CB_33M 40.5M<
PCICLK_MPCI1_33M 45.6B<
PCICLK_DOCK_33M 46.4K<
LPCCLK_SIO_33M 54.7C<
LPCCLK_GA_FWH_33M 48.7B< 52.7B<
LPCCLK_CRYPT_33M 60.4J<
PCICLK_GBE_33M 76.3B<
USB48M DOT48M
R706 NO_ASM
R167 R181 NO_ASM
USBCLK_48M 25.2C<
CBCLK_48M 40.4M<
R171 R187 R44 R197 NO_ASM 33 5% 1/16W 1005
ICH4M_14M 25.2C<
SIO_14M 54.5E<
CRYPT_14M 60.4J<
AUDIO_14M 31.7C<
NEAR CLOCK GEN
R323 0 5% 1/16W 1005
LOGIC

SEL1	SEL0	CPU
0	0	66M
0	1	100M
1	0	200M
1	1	133M

ETHERNET TABLE (1/5)

	KENNERETH-R	KENAI2-32	KENAI32M
R706	NO-ASM	ASM	ASM

DESIGNER	Y.I	11/21/03
CHECKED	Y.Y	11/21/03
APPROVED	K.T	11/21/03
CLASS	K.T	11/21/03

PART NO. 13R1088

IBM

TITLE ROME-1 RWK(V099)

CLOCK GEN(CK-408)

IBM CONFIDENTIAL

REL	DATE	EC NO.
REL	11/21/03	J45843A

PART NO. 13R1088

DEVELOPMENT NO.

Q/M 17 /82

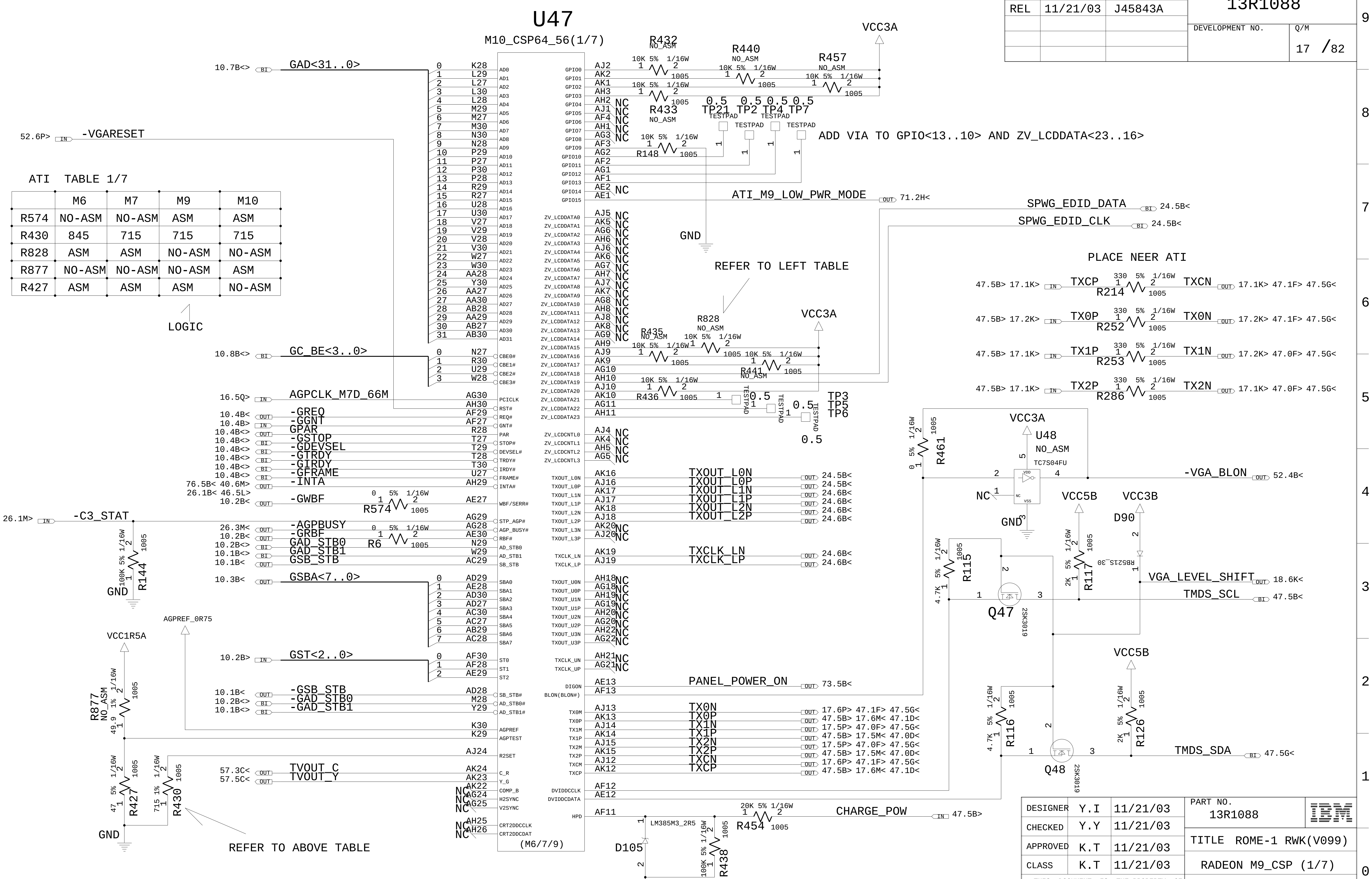

U47
M10_CSP64_56(1/7)
GAD<31..0>
-VGARESET
GC_BE<3..0>
AGPCLK_M7D_66M
-GREQ
-GGNT
GPAR
-GSTOP
-GDEVSEL
-GTRDY
-GIRDY
-GFRAME
-INTA
-GWBF
R574
-C3_STAT
-AGPBUSY
-GRBF
R6
GAD_STB0
GAD_STB1
GSB_STB
GSBA<7..0>
GST<2..0>
-GSB_STB
-GAD_STB0
-GAD_STB1
TVOUT_C
TVOUT_Y
AGPREF_0R75
VCC1R5A
R877
NO_ASM
R144
R427
R430
GND
REFER TO ABOVE TABLE
LOGIC
R432
R440
R457
VCC3A
R433
R148
TP21
TP2
TP4
TP7
TESTPAD
ADD VIA TO GPIO<13..10> AND ZV_LCDDATA<23..16>
ATI_M9_LOW_PWR_MODE
SPWG_EDID_DATA
SPWG_EDID_CLK
REFER TO LEFT TABLE
R828
R435
R441
R436
TP3
TP5
TP6
PLACE NEER ATI
TXCP
TXCN
R214
TX0P
TX0N
R252
TX1P
TX1N
R253
TX2P
TX2N
R286
R461
U48
NO_ASM
TC7S04FU
-VGA_BLON
TXOUT_L0N
TXOUT_L0P
TXOUT_L1N
TXOUT_L1P
TXOUT_L2N
TXOUT_L2P
TXCLK_LN
TXCLK_LP
VCC5B
VCC3B
D90
RB521S_30
R115
R117
Q47
2SK3019
VGA_LEVEL_SHIFT
TMDS_SCL
PANEL_POWER_ON
TX0N
TX0P
TX1N
TX1P
TX2N
TX2P
TXCN
TXCP
R116
R126
Q48
TMDS_SDA
CHARGE_POW
R454
LM385M3_2R5
D105
R438
(M6/7/9)

ATI TABLE 1/7

	M6	M7	M9	M10
R574	NO-ASM	NO-ASM	ASM	ASM
R430	845	715	715	715
R828	ASM	ASM	NO-ASM	NO-ASM
R877	NO-ASM	NO-ASM	NO-ASM	ASM
R427	ASM	ASM	ASM	NO-ASM

DESIGNER	Y.I	11/21/03
CHECKED	Y.Y	11/21/03
APPROVED	K.T	11/21/03
CLASS	K.T	11/21/03

PART NO. 13R1088

IBM

TITLE ROME-1 RWK(V099)

RADEON M9_CSP (1/7)

IBM CONFIDENTIAL

	DATE	EC NO.
REL	11/21/03	J45843A

PART NO. 13R1088

DEVELOPMENT NO.

Q/M 18 /82

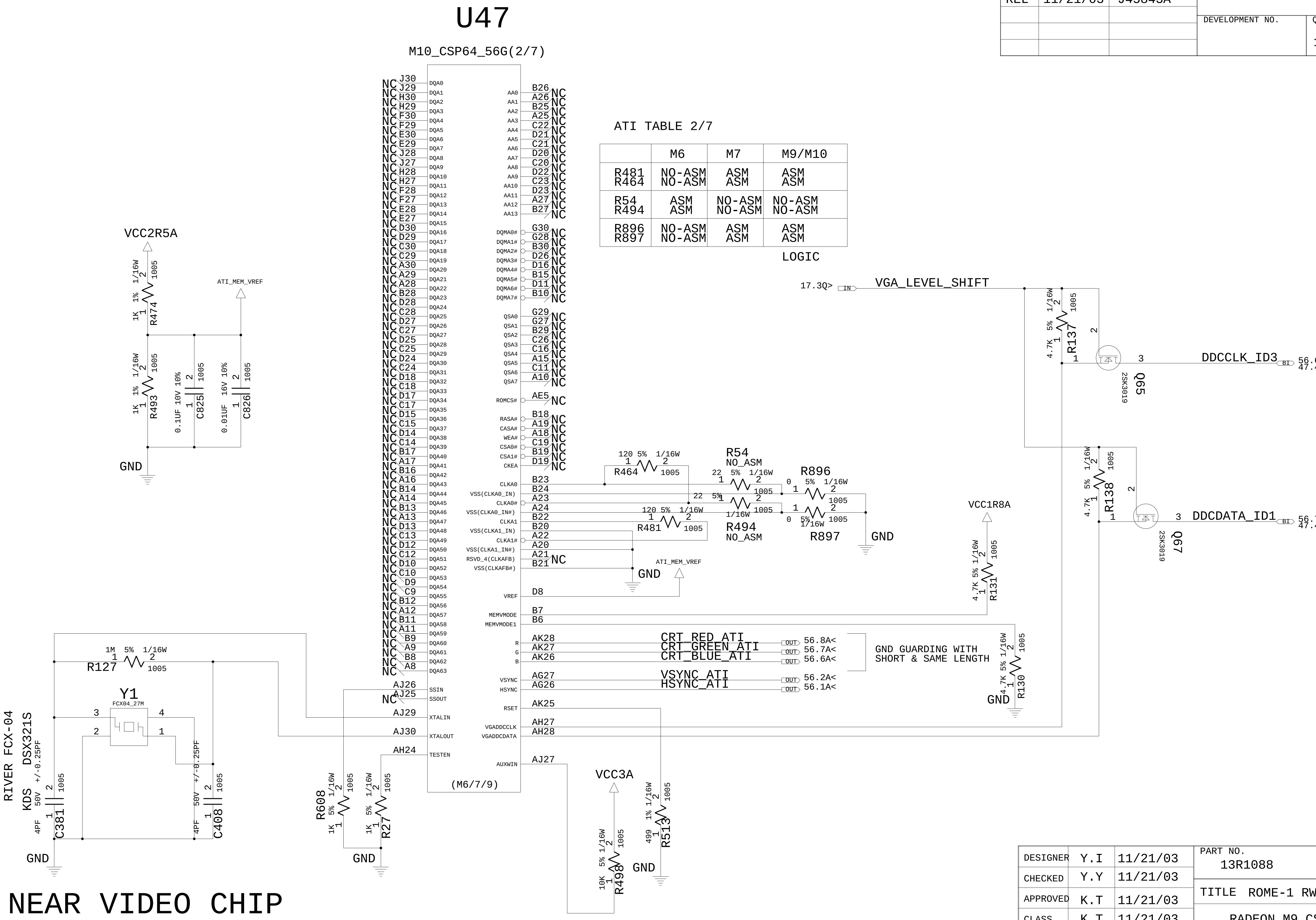
U47
M10_CSP64_56G(2/7)
(M6/7/9)
J30 DQA0
J29 DQA1
H30 DQA2
H29 DQA3
F30 DQA4
F29 DQA5
E30 DQA6
E29 DQA7
J28 DQA8
J27 DQA9
H28 DQA10
H27 DQA11
F28 DQA12
F27 DQA13
E28 DQA14
E27 DQA15
D30 DQA16
D29 DQA17
C30 DQA18
C29 DQA19
A30 DQA20
A29 DQA21
A28 DQA22
B28 DQA23
D28 DQA24
C28 DQA25
D27 DQA26
C27 DQA27
D25 DQA28
C25 DQA29
D24 DQA30
C24 DQA31
D18 DQA32
C18 DQA33
D17 DQA34
C17 DQA35
D15 DQA36
C15 DQA37
D14 DQA38
C14 DQA39
B17 DQA40
A17 DQA41
B16 DQA42
A16 DQA43
B14 DQA44
A14 DQA45
B13 DQA46
A13 DQA47
D13 DQA48
C13 DQA49
D12 DQA50
C12 DQA51
D10 DQA52
C10 DQA53
D9 DQA54
C9 DQA55
B12 DQA56
A12 DQA57
B11 DQA58
A11 DQA59
B9 DQA60
A9 DQA61
B8 DQA62
A8 DQA63
NC
AA0 B26
AA1 A26
AA2 B25
AA3 A25
AA4 C22
AA5 D21
AA6 C21
AA7 D20
AA8 C20
AA9 D22
AA10 C23
AA11 D23
AA12 A27
AA13 B27
DQMA0# G30
DQMA1# G28
DQMA2# B30
DQMA3# D26
DQMA4# D16
DQMA5# B15
DQMA6# D11
DQMA7# B10
QSA0 G29
QSA1 G27
QSA2 B29
QSA3 C26
QSA4 C16
QSA5 A15
QSA6 C11
QSA7 A10
ROMCS# AE5
RASA# B18
CASA# A19
WEA# A18
CSA0# C19
CSA1# B19
CKEA D19
CLKA0 B23
VSS(CLKA0_IN) B24
CLKA0# A23
VSS(CLKA0_IN#) A24
CLKA1 B22
VSS(CLKA1_IN) B20
CLKA1# A22
VSS(CLKA1_IN#) A20
RSVD_4(CLKAFB) A21
VSS(CLKAFB#) B21
VREF D8
MEMVMODE B7
MEMVMODE1 B6
R AK28
G AK27
B AK26
VSYNC AG27
HSYNC AG26
RSET AK25
VGADDCCLK AH27
VGADDCDATA AH28
AUXWIN AJ27
AJ26 SSIN
AJ25 SSOUT
AJ29 XTALIN
AJ30 XTALOUT
AH24 TESTEN
VCC2R5A
R474 1K 1% 1/16W 1005
ATI_MEM_VREF
R493 1K 1% 1/16W 1005
C825 0.1UF 10V 10% 1005
C826 0.01UF 16V 10% 1005
GND
R464 120 5% 1/16W 1005
R54 NO_ASM 22 5% 1/16W 1005
R896 0 5% 1/16W 1005
R494 NO_ASM 22 5% 1/16W 1005
R897 0 5% 1/16W 1005
R481 120 5% 1/16W 1005
ATI_MEM_VREF
GND
CRT_RED_ATI OUT 56.8A<
CRT_GREEN_ATI OUT 56.7A<
CRT_BLUE_ATI OUT 56.6A<
VSYNC_ATI OUT 56.2A<
HSYNC_ATI OUT 56.1A<
GND GUARDING WITH
SHORT & SAME LENGTH
17.3Q> IN VGA_LEVEL_SHIFT
R137 4.7K 5% 1/16W 1005
Q65 2SK3019
DDCCLK_ID3 BI 56.6P<> 47.4B<
R138 4.7K 5% 1/16W 1005
Q67 2SK3019
DDCDATA_ID1 BI 56.7P<> 47.4G<
VCC1R8A
R131 4.7K 5% 1/16W 1005
R130 4.7K 5% 1/16W 1005
GND
R127 1M 5% 1/16W 1005
Y1 FCX04_27M
RIVER FCX-04
KDS DSX321S
C381 4PF 50V +/-0.25PF 1005
C408 4PF 50V +/-0.25PF 1005
GND
R608 1K 5% 1/16W 1005
R27 1K 5% 1/16W 1005
GND
VCC3A
R498 10K 5% 1/16W 1005
R513 499 1% 1/16W 1005
GND

ATI TABLE 2/7

	M6	M7	M9/M10
R481 R464	NO-ASM NO-ASM	ASM ASM	ASM ASM
R54 R494	ASM ASM	NO-ASM NO-ASM	NO-ASM NO-ASM
R896 R897	NO-ASM NO-ASM	ASM ASM	ASM ASM

LOGIC

NEAR VIDEO CHIP

13R1088

DESIGNER	Y.I	11/21/03
CHECKED	Y.Y	11/21/03
APPROVED	K.T	11/21/03
CLASS	K.T	11/21/03

PART NO. 13R1088

IBM

TITLE ROME-1 RWK(V099)

RADEON M9_CSP (2/7)

IBM CONFIDENTIAL

	DATE	EC NO.
REL	11/21/03	J45843A

PART NO.
13R1088

DEVELOPMENT NO.

Q/M
19 /82

U47

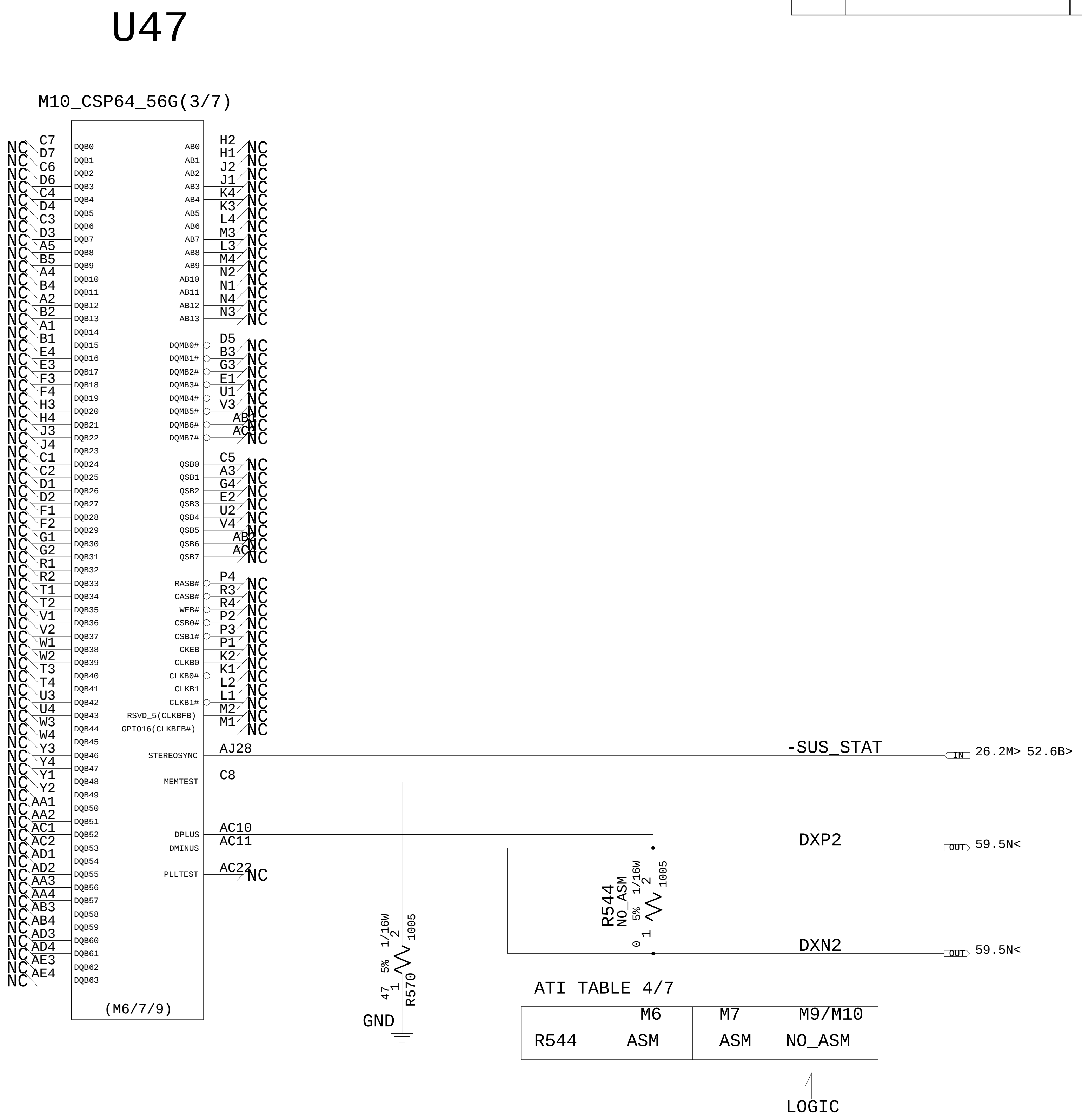
M10_CSP64_56G(3/7)
C7 DQB0 NC
D7 DQB1 NC
C6 DQB2 NC
D6 DQB3 NC
C4 DQB4 NC
D4 DQB5 NC
C3 DQB6 NC
D3 DQB7 NC
A5 DQB8 NC
B5 DQB9 NC
A4 DQB10 NC
B4 DQB11 NC
A2 DQB12 NC
B2 DQB13 NC
A1 DQB14 NC
B1 DQB15 NC
E4 DQB16 NC
E3 DQB17 NC
F3 DQB18 NC
F4 DQB19 NC
H3 DQB20 NC
H4 DQB21 NC
J3 DQB22 NC
J4 DQB23 NC
C1 DQB24 NC
C2 DQB25 NC
D1 DQB26 NC
D2 DQB27 NC
F1 DQB28 NC
F2 DQB29 NC
G1 DQB30 NC
G2 DQB31 NC
R1 DQB32 NC
R2 DQB33 NC
T1 DQB34 NC
T2 DQB35 NC
V1 DQB36 NC
V2 DQB37 NC
W1 DQB38 NC
W2 DQB39 NC
T3 DQB40 NC
T4 DQB41 NC
U3 DQB42 NC
U4 DQB43 NC
W3 DQB44 NC
W4 DQB45 NC
Y3 DQB46 NC
Y4 DQB47 NC
Y1 DQB48 NC
Y2 DQB49 NC
AA1 DQB50 NC
AA2 DQB51 NC
AC1 DQB52 NC
AC2 DQB53 NC
AD1 DQB54 NC
AD2 DQB55 NC
AA3 DQB56 NC
AA4 DQB57 NC
AB3 DQB58 NC
AB4 DQB59 NC
AD3 DQB60 NC
AD4 DQB61 NC
AE3 DQB62 NC
AE4 DQB63 NC
AB0 H2 NC
AB1 H1 NC
AB2 J2 NC
AB3 J1 NC
AB4 K4 NC
AB5 K3 NC
AB6 L4 NC
AB7 M3 NC
AB8 L3 NC
AB9 M4 NC
AB10 N2 NC
AB11 N1 NC
AB12 N4 NC
AB13 N3 NC
DQMB0# D5 NC
DQMB1# B3 NC
DQMB2# G3 NC
DQMB3# E1 NC
DQMB4# U1 NC
DQMB5# V3 NC
DQMB6# AB1 NC
DQMB7# AC3 NC
QSB0 C5 NC
QSB1 A3 NC
QSB2 G4 NC
QSB3 E2 NC
QSB4 U2 NC
QSB5 V4 NC
QSB6 AB2 NC
QSB7 AC4 NC
RASB# P4 NC
CASB# R3 NC
WEB# R4 NC
CSB0# P2 NC
CSB1# P3 NC
CKEB P1 NC
CLKB0 K2 NC
CLKB0# K1 NC
CLKB1 L2 NC
CLKB1# L1 NC
RSVD_5(CLKBFB) M2 NC
GPIO16(CLKBFB#) M1 NC
STEREOSYNC AJ28
-SUS_STAT
IN 26.2M> 52.6B>
MEMTEST C8
DPLUS AC10
DMINUS AC11
DXP2
OUT 59.5N<
DXN2
OUT 59.5N<
PLLTEST AC22 NC
(M6/7/9)
R544 NO_ASM 0 5% 1/16W 1005 1 2
R570 47 5% 1/16W 1005 1 2
GND
LOGIC

ATI TABLE 4/7

	M6	M7	M9/M10
R544	ASM	ASM	NO_ASM

DESIGNER	Y.I	11/21/03
CHECKED	Y.Y	11/21/03
APPROVED	K.T	11/21/03
CLASS	K.T	11/21/03

PART NO.
13R1088
IBM

TITLE ROME-1 RWK(V099)
RADEON M9_CSP (3/7)

IBM CONFIDENTIAL

REL	DATE	EC NO.	PART NO.
REL	11/21/03	J45843A	13R1088

DEVELOPMENT NO.

Q/M 20 /82

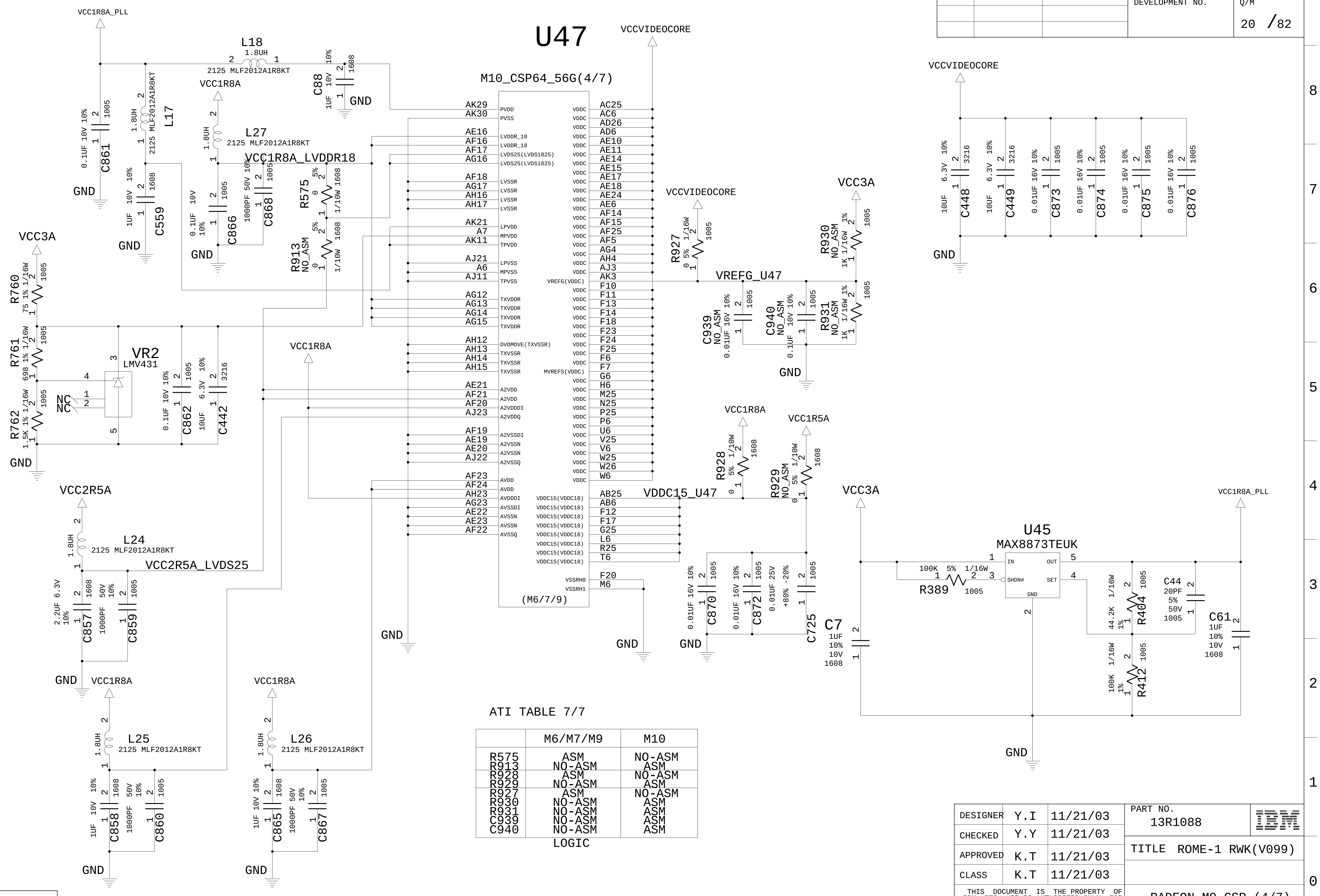
U47
M10_CSP64_56G(4/7)
(M6/7/9)
VCCVIDEOCORE
VCC1R8A_PLL
L18
1.8UH
2125 MLF2012A1R8KT
C88 1UF 10V 10% 1608
GND
C861 0.1UF 10V 10% 1005
L17 1.8UH 2125 MLF2012A1R8KT
C559 1UF 10V 10% 1608
VCC1R8A
L27 1.8UH 2125 MLF2012A1R8KT
VCC1R8A_LVDDR18
C866 0.1UF 10V 10% 1005
C868 1000PF 50V 10% 1005
R575 0 5% 1/10W 1608
R913 NO_ASM 0 5% 1/10W 1608
VCC3A
R760 75 1% 1/16W 1005
R761 698 1% 1/16W 1005
R762 1.5K 1% 1/16W 1005
VR2 LMV431
NC
NC
C862 0.1UF 10V 10% 1005
C442 10UF 6.3V 10% 3216
VCC2R5A
L24 1.8UH 2125 MLF2012A1R8KT
VCC2R5A_LVDS25
C857 2.2UF 6.3V 10% 1608
C859 1000PF 50V 10% 1005
L25 1.8UH 2125 MLF2012A1R8KT
C858 1UF 10V 10% 1608
C860 1000PF 50V 10% 1005
L26 1.8UH 2125 MLF2012A1R8KT
C865 1UF 10V 10% 1608
C867 1000PF 50V 10% 1005
AK29 PVDD
AK30 PVSS
AE16 LVDDR_18
AF16 LVDDR_18
AF17 LVDDS25(LVDS1825)
AG16 LVDDS25(LVDS1825)
AF18 LVSSR
AG17 LVSSR
AH16 LVSSR
AH17 LVSSR
AK21 LPVDD
A7 MPVDD
AK11 TPVDD
AJ21 LPVSS
A6 MPVSS
AJ11 TPVSS
AG12 TXVDDR
AG13 TXVDDR
AG14 TXVDDR
AG15 TXVDDR
AH12 DVOMOVE(TXVSSR)
AH13 TXVSSR
AH14 TXVSSR
AH15 TXVSSR
AE21 A2VDD
AF21 A2VDD
AF20 A2VDDDI
AJ23 A2VDDQ
AF19 A2VSSDI
AE19 A2VSSN
AE20 A2VSSN
AJ22 A2VSSQ
AF23 AVDD
AF24 AVDD
AH23 AVDDDI
AG23 AVSSDI
AE22 AVSSN
AE23 AVSSN
AF22 AVSSQ
VDDC AC25 AC6 AD26 AD6 AE10 AE11 AE14 AE15 AE17 AE18 AE24 AE6 AF14 AF15 AF25 AF5 AG4 AH4 AJ3
VREFG(VDDC) AK3
VDDC F10 F11 F13 F14 F18 F23 F24 F25 F6
MVREFS(VDDC) F7
VDDC G6 H6 M25 N25 P25 P6 U6 V25 V6 W25 W26 W6
VDDC15(VDDC18) AB25 AB6 F12 F17 G25 L6 R25 T6
VSSRH0 F20
VSSRH1 M6
R927 0 5% 1/16W 1005
VREFG_U47
C939 NO_ASM 0.01UF 16V 10% 1005
C940 NO_ASM 0.1UF 10V 10% 1005
R930 NO_ASM 1K 1% 1/16W 1005
R931 NO_ASM 1K 1% 1/16W 1005
VCC1R8A
VCC1R5A
R928 0 5% 1/10W 1608
R929 NO_ASM 0 5% 1/10W 1608
VDDC15_U47
C870 0.01UF 16V 10% 1005
C872 0.01UF 16V 10% 1005
C725 0.01UF 25V +80% -20% 1005
C448 10UF 6.3V 10% 3216
C449 10UF 6.3V 10% 3216
C873 0.01UF 16V 10% 1005
C874 0.01UF 16V 10% 1005
C875 0.01UF 16V 10% 1005
C876 0.01UF 16V 10% 1005
U45 MAX8873TEUK
IN OUT SHDN# SET GND
R389 100K 5% 1/16W 1005
C7 1UF 10% 10V 1608
R404 44.2K 1% 1/16W 1005
R412 100K 1% 1/16W 1005
C44 20PF 5% 50V 1005
C61 1UF 10% 10V 1608

ATI TABLE 7/7

	M6/M7/M9	M10
R575	ASM	NO-ASM
R913	NO-ASM	ASM
R928	ASM	NO-ASM
R929	NO-ASM	ASM
R927	ASM	NO-ASM
R930	NO-ASM	ASM
R931	NO-ASM	ASM
C939	NO-ASM	ASM
C940	NO-ASM	ASM

LOGIC

DESIGNER	Y.I	11/21/03	PART NO. 13R1088
CHECKED	Y.Y	11/21/03	TITLE ROME-1 RWK(V099)
APPROVED	K.T	11/21/03	
CLASS	K.T	11/21/03	

IBM

RADEON M9_CSP (4/7)

IBM CONFIDENTIAL

	DATE	EC NO.	PART NO.	
REL	11/21/03	J45843A	13R1088	
			DEVELOPMENT NO.	Q/M 21 /82

U47

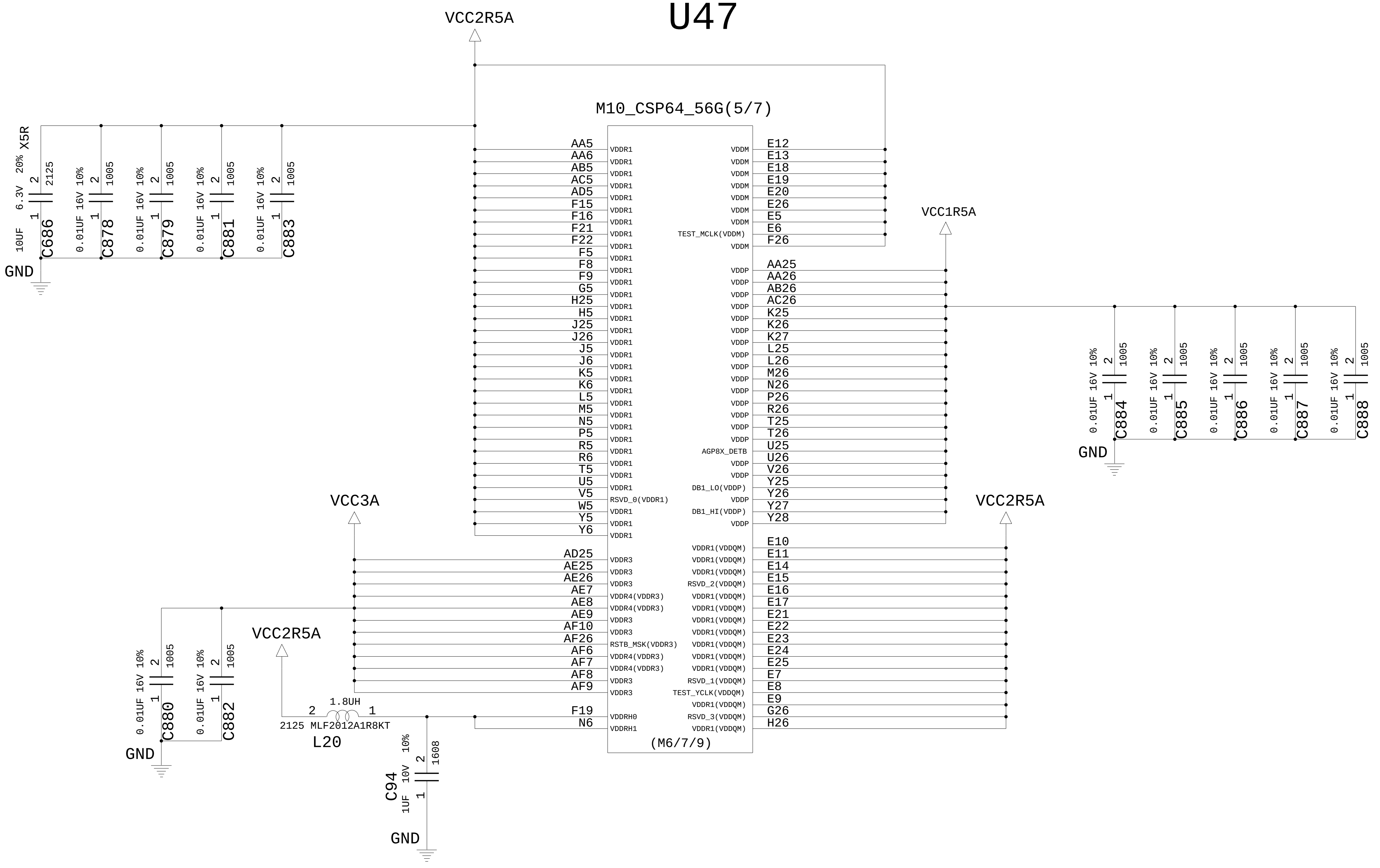

VCC2R5A
M10_CSP64_56G(5/7)
AA5 VDDR1
AA6 VDDR1
AB5 VDDR1
AC5 VDDR1
AD5 VDDR1
F15 VDDR1
F16 VDDR1
F21 VDDR1
F22 VDDR1
F5 VDDR1
F8 VDDR1
F9 VDDR1
G5 VDDR1
H25 VDDR1
H5 VDDR1
J25 VDDR1
J26 VDDR1
J5 VDDR1
J6 VDDR1
K5 VDDR1
K6 VDDR1
L5 VDDR1
M5 VDDR1
N5 VDDR1
P5 VDDR1
R5 VDDR1
R6 VDDR1
T5 VDDR1
U5 VDDR1
V5 VDDR1
W5 RSVD_0(VDDR1)
Y5 VDDR1
Y6 VDDR1
VDDR1
AD25 VDDR3
AE25 VDDR3
AE26 VDDR3
AE7 VDDR4(VDDR3)
AE8 VDDR4(VDDR3)
AE9 VDDR3
AF10 VDDR3
AF26 RSTB_MSK(VDDR3)
AF6 VDDR4(VDDR3)
AF7 VDDR4(VDDR3)
AF8 VDDR3
AF9 VDDR3
F19 VDDRH0
N6 VDDRH1
(M6/7/9)
E12 VDDM
E13 VDDM
E18 VDDM
E19 VDDM
E20 VDDM
E26 VDDM
E5 VDDM
E6 TEST_MCLK(VDDM)
F26 VDDM
AA25 VDDP
AA26 VDDP
AB26 VDDP
AC26 VDDP
K25 VDDP
K26 VDDP
K27 VDDP
L25 VDDP
L26 VDDP
M26 VDDP
N26 VDDP
P26 VDDP
R26 VDDP
T25 VDDP
T26 VDDP
U25 VDDP
U26 AGP8X_DETB
V26 VDDP
Y25 VDDP
Y26 DB1_LO(VDDP)
Y27 VDDP
Y28 DB1_HI(VDDP)
VDDP
E10 VDDR1(VDDQM)
E11 VDDR1(VDDQM)
E14 VDDR1(VDDQM)
E15 RSVD_2(VDDQM)
E16 VDDR1(VDDQM)
E17 VDDR1(VDDQM)
E21 VDDR1(VDDQM)
E22 VDDR1(VDDQM)
E23 VDDR1(VDDQM)
E24 VDDR1(VDDQM)
E25 VDDR1(VDDQM)
E7 VDDR1(VDDQM)
E8 RSVD_1(VDDQM)
E9 TEST_YCLK(VDDQM)
G26 VDDR1(VDDQM)
H26 RSVD_3(VDDQM)
VDDR1(VDDQM)
C686 10UF 6.3V 20% X5R 2125
C878 0.01UF 16V 10% 1005
C879 0.01UF 16V 10% 1005
C881 0.01UF 16V 10% 1005
C883 0.01UF 16V 10% 1005
GND
VCC1R5A
C884 0.01UF 16V 10% 1005
C885 0.01UF 16V 10% 1005
C886 0.01UF 16V 10% 1005
C887 0.01UF 16V 10% 1005
C888 0.01UF 16V 10% 1005
GND
VCC3A
VCC2R5A
C880 0.01UF 16V 10% 1005
C882 0.01UF 16V 10% 1005
GND
VCC2R5A
L20 1.8UH 2125 MLF2012A1R8KT
C94 1UF 10V 10% 1608
GND
VCC2R5A
1
2

13R1088

DESIGNER	Y.I	11/21/03	PART NO. 13R1088	IBM
CHECKED	Y.Y	11/21/03	TITLE ROME-1 RWK(V099)	
APPROVED	K.T	11/21/03	TITLE ROME-1 RWK(V099)	
CLASS	K.T	11/21/03	RADEON M9_CSP (5/7)	

THIS DOCUMENT IS THE PROPERTY OF IBM ITS USE IS AUTHORIZED ONLY FOR RESPONDING TO A REQUEST FOR QUOTATION OR FOR THE PERFORMANCE OF WORK FOR IBM. ALL QUESTIONS MUST BE REFERRED TO THE IBM PURCHASING DEPARTMENT.

IBM CONFIDENTIAL

	DATE	EC NO.
REL	11/21/03	J45843A

PART NO. 13R1088

DEVELOPMENT NO.

Q/M 22 /82

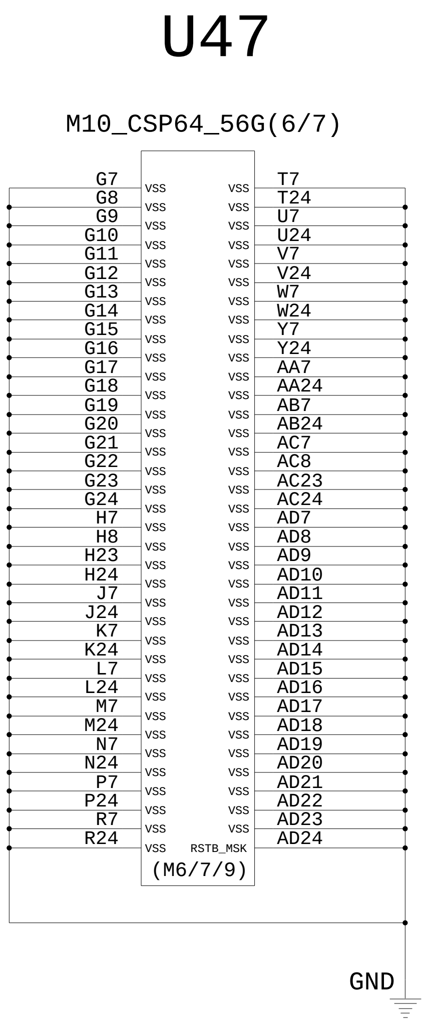
U47
M10_CSP64_56G(6/7)
G7 VSS VSS T7
G8 VSS VSS T24
G9 VSS VSS U7
G10 VSS VSS U24
G11 VSS VSS V7
G12 VSS VSS V24
G13 VSS VSS W7
G14 VSS VSS W24
G15 VSS VSS Y7
G16 VSS VSS Y24
G17 VSS VSS AA7
G18 VSS VSS AA24
G19 VSS VSS AB7
G20 VSS VSS AB24
G21 VSS VSS AC7
G22 VSS VSS AC8
G23 VSS VSS AC23
G24 VSS VSS AC24
H7 VSS VSS AD7
H8 VSS VSS AD8
H23 VSS VSS AD9
H24 VSS VSS AD10
J7 VSS VSS AD11
J24 VSS VSS AD12
K7 VSS VSS AD13
K24 VSS VSS AD14
L7 VSS VSS AD15
L24 VSS VSS AD16
M7 VSS VSS AD17
M24 VSS VSS AD18
N7 VSS VSS AD19
N24 VSS VSS AD20
P7 VSS VSS AD21
P24 VSS VSS AD22
R7 VSS VSS AD23
R24 VSS RSTB_MSK AD24
(M6/7/9)
GND

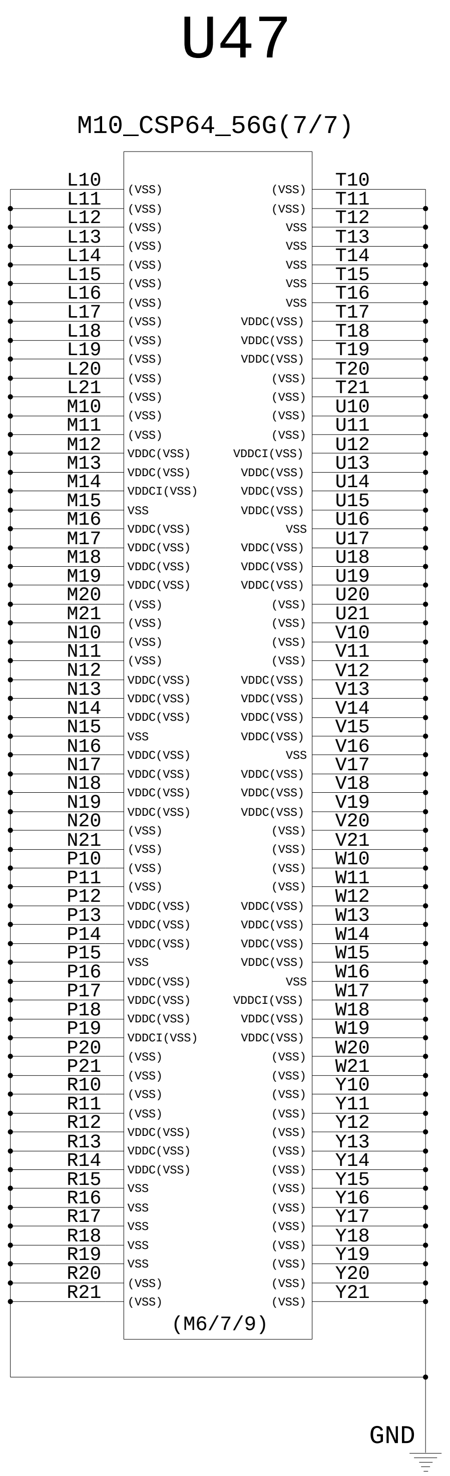
U47
M10_CSP64_56G(7/7)
L10 (VSS) (VSS) T10
L11 (VSS) (VSS) T11
L12 (VSS) VSS T12
L13 (VSS) VSS T13
L14 (VSS) VSS T14
L15 (VSS) VSS T15
L16 (VSS) VSS T16
L17 (VSS) VDDC(VSS) T17
L18 (VSS) VDDC(VSS) T18
L19 (VSS) VDDC(VSS) T19
L20 (VSS) (VSS) T20
L21 (VSS) (VSS) T21
M10 (VSS) (VSS) U10
M11 (VSS) (VSS) U11
M12 VDDC(VSS) VDDCI(VSS) U12
M13 VDDC(VSS) VDDC(VSS) U13
M14 VDDCI(VSS) VDDC(VSS) U14
M15 VSS VDDC(VSS) U15
M16 VDDC(VSS) VSS U16
M17 VDDC(VSS) VDDC(VSS) U17
M18 VDDC(VSS) VDDC(VSS) U18
M19 VDDC(VSS) VDDC(VSS) U19
M20 (VSS) (VSS) U20
M21 (VSS) (VSS) U21
N10 (VSS) (VSS) V10
N11 (VSS) (VSS) V11
N12 VDDC(VSS) VDDC(VSS) V12
N13 VDDC(VSS) VDDC(VSS) V13
N14 VDDC(VSS) VDDC(VSS) V14
N15 VSS VDDC(VSS) V15
N16 VDDC(VSS) VSS V16
N17 VDDC(VSS) VDDC(VSS) V17
N18 VDDC(VSS) VDDC(VSS) V18
N19 VDDC(VSS) VDDC(VSS) V19
N20 (VSS) (VSS) V20
N21 (VSS) (VSS) V21
P10 (VSS) (VSS) W10
P11 (VSS) (VSS) W11
P12 VDDC(VSS) VDDC(VSS) W12
P13 VDDC(VSS) VDDC(VSS) W13
P14 VDDC(VSS) VDDC(VSS) W14
P15 VSS VDDC(VSS) W15
P16 VDDC(VSS) VSS W16
P17 VDDC(VSS) VDDCI(VSS) W17
P18 VDDC(VSS) VDDC(VSS) W18
P19 VDDCI(VSS) VDDC(VSS) W19
P20 (VSS) (VSS) W20
P21 (VSS) (VSS) W21
R10 (VSS) (VSS) Y10
R11 (VSS) (VSS) Y11
R12 VDDC(VSS) (VSS) Y12
R13 VDDC(VSS) (VSS) Y13
R14 VDDC(VSS) (VSS) Y14
R15 VSS (VSS) Y15
R16 VSS (VSS) Y16
R17 VSS (VSS) Y17
R18 VSS (VSS) Y18
R19 VSS (VSS) Y19
R20 (VSS) (VSS) Y20
R21 (VSS) (VSS) Y21
(M6/7/9)
GND

DESIGNER	Y.I	11/21/03	PART NO. 13R1088
CHECKED	Y.Y	11/21/03	TITLE ROME-1 RWK(V099)
APPROVED	K.T	11/21/03	
CLASS	K.T	11/21/03	RADEON M9_CSP (6/7 7/7)

IBM

IBM CONFIDENTIAL

	DATE	EC NO.
REL	11/21/03	J45843A

PART NO. 13R1088

DEVELOPMENT NO.

Q/M 23 /82

BLANK

DESIGNER	Y.I	11/21/03
CHECKED	Y.Y	11/21/03
APPROVED	K.T	11/21/03
CLASS	K.T	11/21/03

PART NO. 13R1088

TITLE ROME-1 RWK(V099)

GFX CLOCK MODULATOR

IBM CONFIDENTIAL

REL	DATE 11/21/03	EC NO. J45843A

PART NO. 13R1088

DEVELOPMENT NO.

Q/M 24 /82

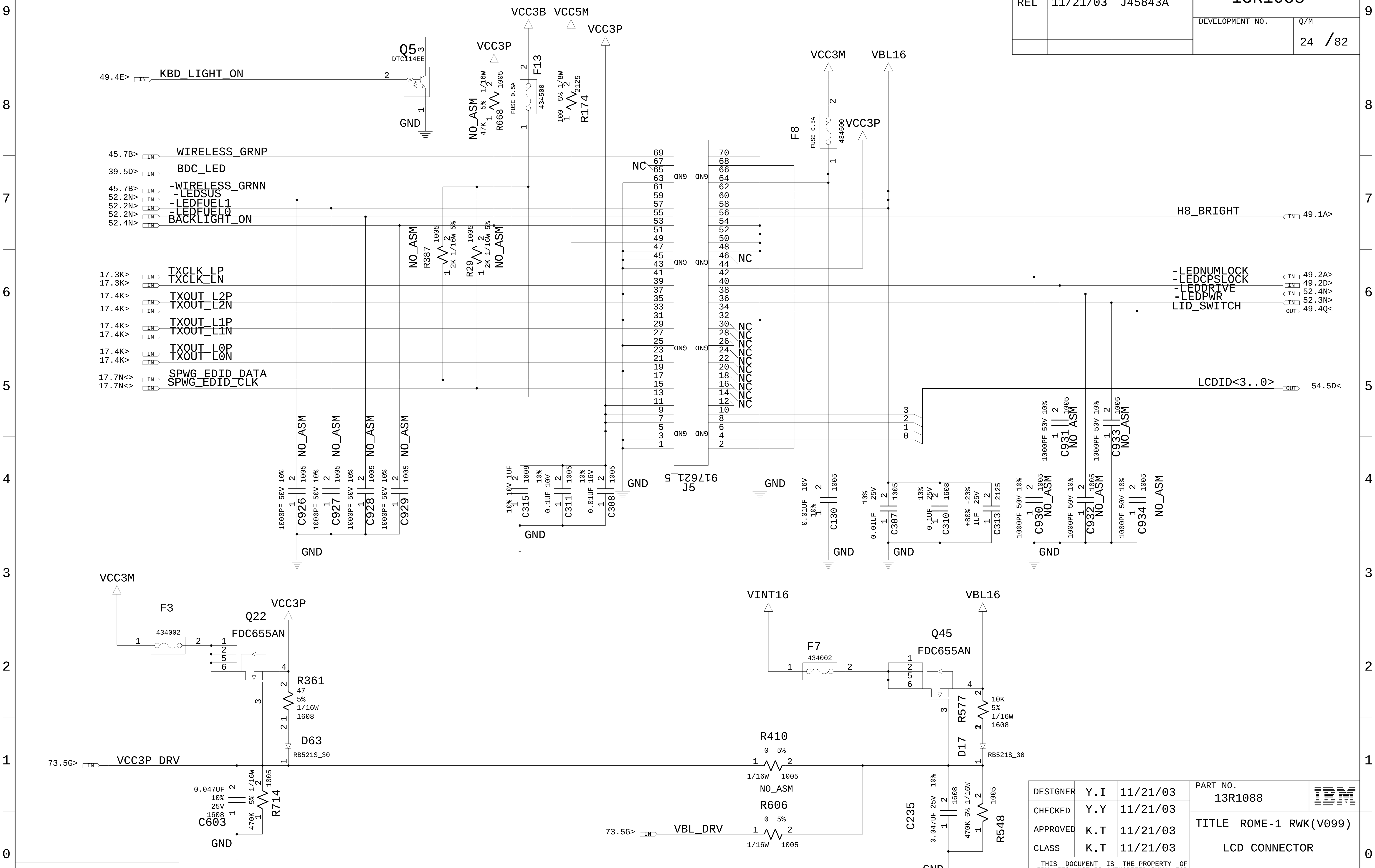

A B C D E F G H J K L M N P Q
9 8 7 6 5 4 3 2 1 0
49.4E> KBD_LIGHT_ON
Q5 DTC114EE
GND
VCC3B VCC5M VCC3P
NO_ASM 47K 5% 1/16W 1005 R668
F13 FUSE 0.5A 434500
100 5% 1/8W 2125 R174
45.7B> WIRELESS_GRNP
39.5D> BDC_LED
45.7B> -WIRELESS_GRNN
52.2N> -LEDSUS
52.2N> -LEDFUEL1
52.2N> -LEDFUEL0
52.4N> BACKLIGHT_ON
NO_ASM R387 2K 1/16W 5% 1005
R29 2K 1/16W 5% 1005 NO_ASM
17.3K> TXCLK_LP
17.3K> TXCLK_LN
17.4K> TXOUT_L2P
17.4K> TXOUT_L2N
17.4K> TXOUT_L1P
17.4K> TXOUT_L1N
17.4K> TXOUT_L0P
17.4K> TXOUT_L0N
17.7N<> SPWG_EDID_DATA
17.7N<> SPWG_EDID_CLK
J5 917621_5
NC
GND
VCC3M VBL16
F8 FUSE 0.5A 434500
H8_BRIGHT 49.1A>
-LEDNUMLOCK 49.2A>
-LEDCPSLOCK 49.2D>
-LEDDRIVE 52.4N>
-LEDPWR 52.3N>
LID_SWITCH 49.4Q<
LCDID<3..0> 54.5D<
C926 C927 C928 C929 1000PF 50V 10% 1005 NO_ASM
C315 10% 10V 1UF 1608
C311 0.1UF 10V 10% 1005
C308 0.01UF 16V 10% 1005
C130 0.01UF 16V 10% 1005
C307 0.01UF 25V 10% 1005
C310 0.1UF 25V 10% 1608
C313 1UF 25V +80% -20% 2125
C930 C931 C932 C933 C934 1000PF 50V 10% 1005 NO_ASM
VCC3M
F3 434002
Q22 FDC655AN
VCC3P
R361 47 5% 1/16W 1608
D63 RB521S_30
73.5G> VCC3P_DRV
C603 0.047UF 10% 25V 1608
R714 470K 5% 1/16W 1005
VINT16 VBL16
F7 434002
Q45 FDC655AN
R577 10K 5% 1/16W 1608
D17 RB521S_30
R410 0 5% 1/16W 1005
NO_ASM
R606 0 5% 1/16W 1005
73.5G> VBL_DRV
C235 0.047UF 25V 10% 1608
R548 470K 5% 1/16W 1005

13R1088

DESIGNER	Y.I	11/21/03
CHECKED	Y.Y	11/21/03
APPROVED	K.T	11/21/03
CLASS	K.T	11/21/03

PART NO. 13R1088

IBM

TITLE ROME-1 RWK(V099)

LCD CONNECTOR

THIS DOCUMENT IS THE PROPERTY OF IBM ITS USE IS AUTHORIZED ONLY FOR RESPONDING TO A REQUEST FOR QUOTATION OR FOR THE PERFORMANCE OF WORK FOR IBM. ALL QUESTIONS MUST BE REFERRED TO THE IBM PURCHASING DEPARTMENT.

IBM CONFIDENTIAL

REL	DATE 11/21/03	EC NO. J45843A

PART NO. 13R1088

DEVELOPMENT NO.

Q/M 25 /82

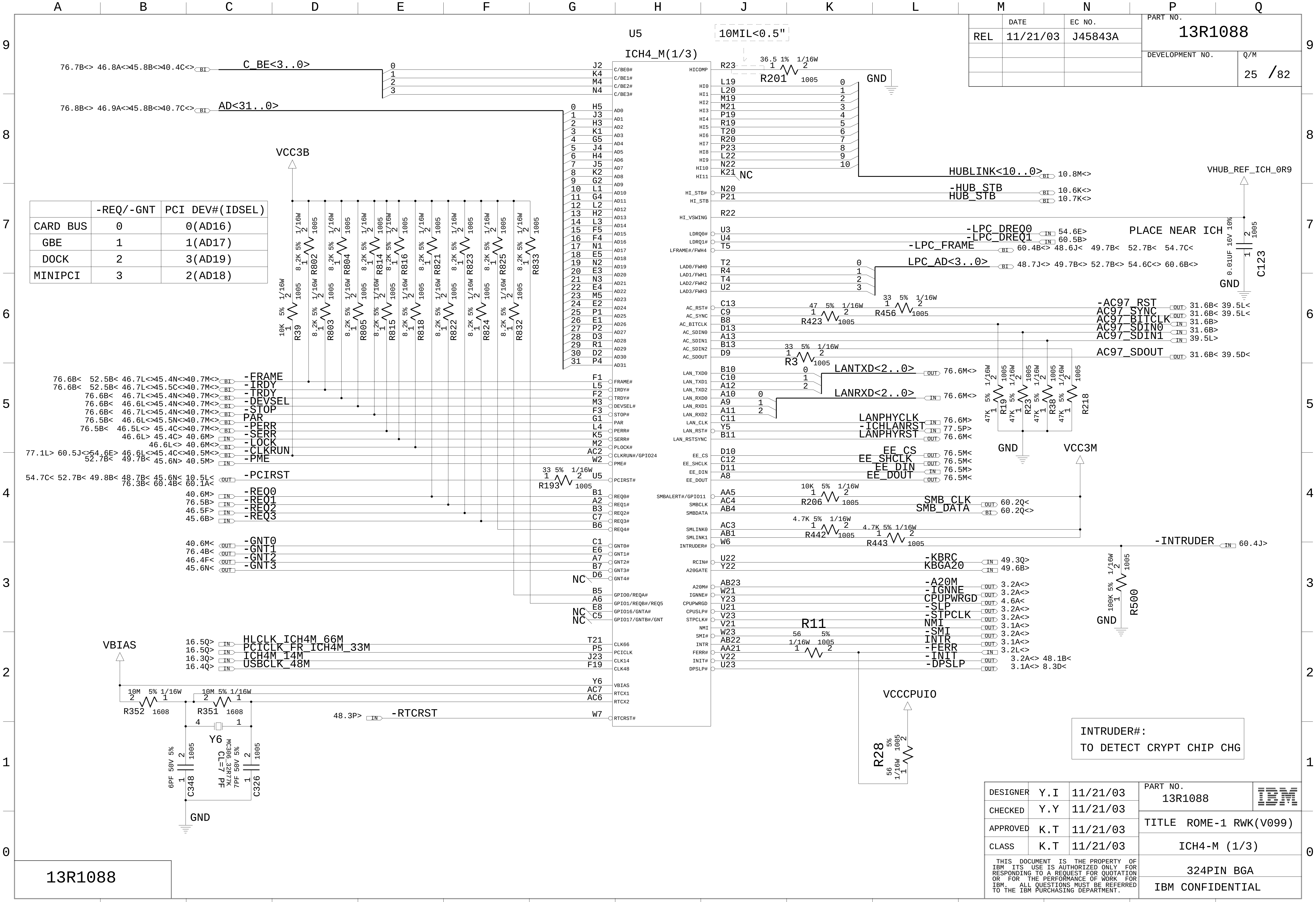

U5
ICH4_M(1/3)
10MIL<0.5"
C_BE<3..0>
76.7B<> 46.8A<>45.8B<>40.4C<>
AD<31..0>
76.8B<> 46.9A<>45.8B<>40.7C<>
C/BE0# C/BE1# C/BE2# C/BE3#
J2 K4 M4 N4
AD0 … AD31
H5 J3 H3 K1 G5 J4 H4 J5 K2 G2 L1 G4 L2 H2 L3 F5 F4 N1 E5 N2 E3 N3 E4 M5 E2 P1 E1 P2 D3 R1 D2 P4
VCC3B
R39 10K 5% 1/16W 1005
R802 R803 R804 R805 R814 R815 R816 R818 R821 R822 R823 R824 R825 R832 R833 8.2K 5% 1/16W 1005
-FRAME -IRDY -TRDY -DEVSEL -STOP PAR -PERR -SERR -LOCK -CLKRUN -PME
FRAME# IRDY# TRDY# DEVSEL# STOP# PAR PERR# SERR# PLOCK# CLKRUN#/GPIO24 PME#
F1 L5 F2 M3 F3 G1 L4 K5 M2 AC2 W2
-PCIRST
R193 33 5% 1/16W 1005
U5 PCIRST#
-REQ0 -REQ1 -REQ2 -REQ3
B1 A2 B3 C7 B6 REQ0# REQ1# REQ2# REQ3# REQ4#
-GNT0 -GNT1 -GNT2 -GNT3
C1 E6 A7 B7 D6 GNT0# GNT1# GNT2# GNT3# GNT4#
NC
B5 A6 E8 C5 GPIO0/REQA# GPIO1/REQB#/REQ5 GPIO16/GNTA# GPIO17/GNTB#/GNT
HLCLK_ICH4M_66M PCICLK_FR_ICH4M_33M ICH4M_14M USBCLK_48M
16.5Q> 16.5Q> 16.3Q> 16.4Q>
T21 P5 J23 F19 CLK66 PCICLK CLK14 CLK48
VBIAS
Y6 AC7 AC6 VBIAS RTCX1 RTCX2
R352 10M 5% 1/16W 1608
R351 10M 5% 1/16W 1608
Y6 MC306 32R768K CL=7 PF
C348 6PF 50V 5% 1005
C326 7PF 50V 5% 1005
GND
-RTCRST 48.3P> W7 RTCRST#
HICOMP R23 R201 36.5 1% 1/16W 1005
GND
HI0 … HI11 L19 L20 M19 M21 P19 R19 T20 R20 P23 L22 N22 K21
NC
HUBLINK<10..0> 10.8M<>
-HUB_STB HUB_STB 10.6K<> 10.7K<>
HI_STB# HI_STB N20 P21
HI_VSWING R22
VHUB_REF_ICH_0R9
PLACE NEAR ICH
C123 0.01UF 16V 10% 1005
-LPC_DREQ0 -LPC_DREQ1 54.6E> 60.5B>
-LPC_FRAME 60.4B<> 48.6J< 49.7B< 52.7B< 54.7C<
LDRQ0# LDRQ1# LFRAME#/FWH4 U3 U4 T5
LPC_AD<3..0> 48.7J<> 49.7B<> 52.7B<> 54.6C<> 60.6B<>
LAD0/FWH0 LAD1/FWH1 LAD2/FWH2 LAD3/FWH3 T2 R4 T4 U2
-AC97_RST AC97_SYNC AC97_BITCLK AC97_SDIN0 AC97_SDIN1 AC97_SDOUT
31.6B< 39.5L< 31.6B< 39.5L< 31.6B> 31.6B> 39.5L> 31.6B< 39.5D<
AC_RST# AC_SYNC AC_BITCLK AC_SDIN0 AC_SDIN1 AC_SDIN2 AC_SDOUT
C13 C9 B8 D13 A13 B13 D9
R423 47 5% 1/16W 1005
R456 33 5% 1/16W 1005
R3 33 5% 1/16W 1005
R19 R23 R38 R218 47K 5% 1/16W 1005
LANTXD<2..0> 76.6M<>
LANRXD<2..0> 76.6M<>
LAN_TXD0 LAN_TXD1 LAN_TXD2 LAN_RXD0 LAN_RXD1 LAN_RXD2 LAN_CLK LAN_RST# LAN_RSTSYNC
B10 C10 A12 A10 A9 A11 C11 Y5 B11
LANPHYCLK -ICHLANRST LANPHYRST 76.6M> 77.5P> 76.6M<
GND
VCC3M
EE_CS EE_SHCLK EE_DIN EE_DOUT 76.5M< 76.5M< 76.5M> 76.5M<
D10 C12 D11 A8
SMBALERT#/GPIO11 SMBCLK SMBDATA AA5 AC4 AB4
R206 10K 5% 1/16W 1005
SMB_CLK SMB_DATA 60.2Q< 60.2Q<>
SMLINK0 SMLINK1 INTRUDER# AC3 AB1 W6
R442 4.7K 5% 1/16W 1005
R443 4.7K 5% 1/16W 1005
-INTRUDER 60.4J>
R500 100K 5% 1/16W 1005
-KBRC KBGA20 49.3Q> 49.6B>
RCIN# A20GATE U22 Y22
-A20M -IGNNE CPUPWRGD -SLP -STPCLK NMI -SMI INTR -FERR -INIT -DPSLP
A20M# IGNNE# CPUPWRGD CPUSLP# STPCLK# NMI SMI# INTR FERR# INIT# DPSLP#
AB23 W21 Y23 U21 V23 V21 W23 AB22 AA21 V22 U23
3.2A<> 3.2A<> 4.6A< 3.2A<> 3.2A<> 3.1A<> 3.2A<> 3.1A<> 3.2L<> 3.2A<> 48.1B< 3.1A<> 8.3D<
R11 56 5% 1/16W 1005
VCCCPUIO
R28 56 5% 1/16W 1005

	-REQ/-GNT	PCI DEV#(IDSEL)
CARD BUS	0	0(AD16)
GBE	1	1(AD17)
DOCK	2	3(AD19)
MINIPCI	3	2(AD18)

INTRUDER#:
TO DETECT CRYPT CHIP CHG

DESIGNER	Y.I	11/21/03
CHECKED	Y.Y	11/21/03
APPROVED	K.T	11/21/03
CLASS	K.T	11/21/03

PART NO. 13R1088

IBM

TITLE ROME-1 RWK(V099)

ICH4-M (1/3)

324PIN BGA

IBM CONFIDENTIAL

	DATE	EC NO.
REL	11/21/03	J45843A

PART NO. 13R1088

DEVELOPMENT NO.

Q/M 26 /82

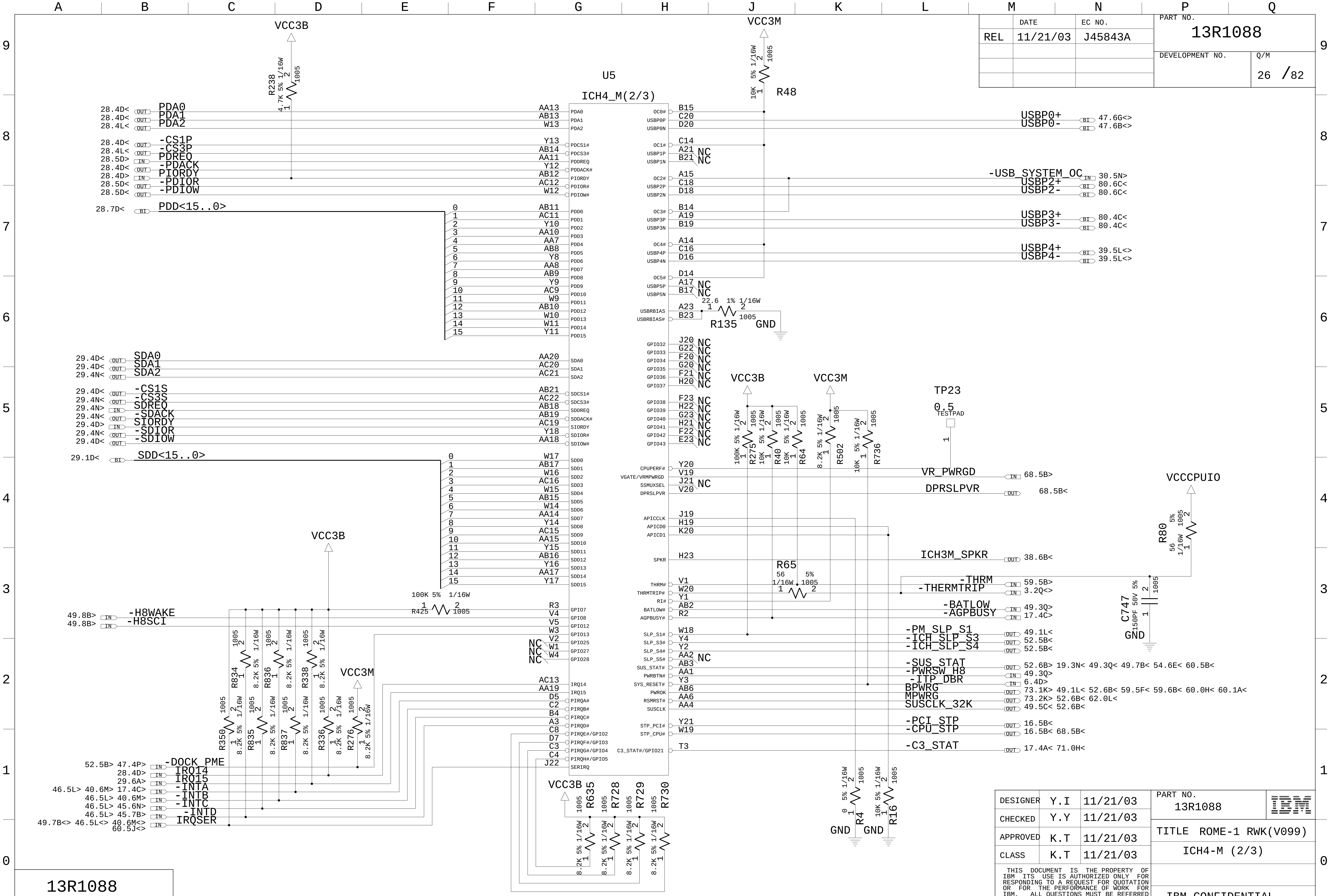
U5
ICH4_M(2/3)
VCC3B
VCC3M
VCCCPUIO
R238 4.7K 5% 1/16W 1005
R48 10K 5% 1/16W 1005
PDA0
PDA1
PDA2
-CS1P
-CS3P
PDREQ
-PDACK
PIORDY
-PDIOR
-PDIOW
PDD<15..0>
SDA0
SDA1
SDA2
-CS1S
-CS3S
SDREQ
-SDACK
SIORDY
-SDIOR
-SDIOW
SDD<15..0>
-H8WAKE
-H8SCI
R425 100K 5% 1/16W 1005
-DOCK_PME
IRQ14
IRQ15
-INTA
-INTB
-INTC
-INTD
IRQSER
R834 R836 R338 R350 R835 R837 R336 R276 8.2K 5% 1/16W 1005
R635 R728 R729 R730 8.2K 5% 1/16W 1005
USBP0+
USBP0-
-USB_SYSTEM_OC
USBP2+
USBP2-
USBP3+
USBP3-
USBP4+
USBP4-
R135 22.6 1% 1/16W 1005
GND
NC
R275 100K 5% 1/16W 1005
R40 10K 5% 1/16W 1005
R64 10K 5% 1/16W 1005
R502 8.2K 5% 1/16W 1005
R736 10K 5% 1/16W 1005
TP23 0.5 TESTPAD
VR_PWRGD
DPRSLPVR
ICH3M_SPKR
R65 56 5% 1/16W 1005
-THRM
-THERMTRIP
-BATLOW
-AGPBUSY
R80 56 5% 1/16W 1005
C747 150PF 50V 5% 1005
-PM_SLP_S1
-ICH_SLP_S3
-ICH_SLP_S4
-SUS_STAT
-PWRSW_H8
-ITP_DBR
BPWRG
MPWRG
SUSCLK_32K
-PCI_STP
-CPU_STP
-C3_STAT
R4 0 5% 1/16W 1005
R16 10K 5% 1/16W 1005

DESIGNER	Y.I	11/21/03
CHECKED	Y.Y	11/21/03
APPROVED	K.T	11/21/03
CLASS	K.T	11/21/03

PART NO. 13R1088

IBM

TITLE ROME-1 RWK(V099)

ICH4-M (2/3)

IBM CONFIDENTIAL

13R1088

	DATE	EC NO.
REL	11/21/03	J45843A

PART NO. 13R1088

DEVELOPMENT NO.

Q/M 27 /82

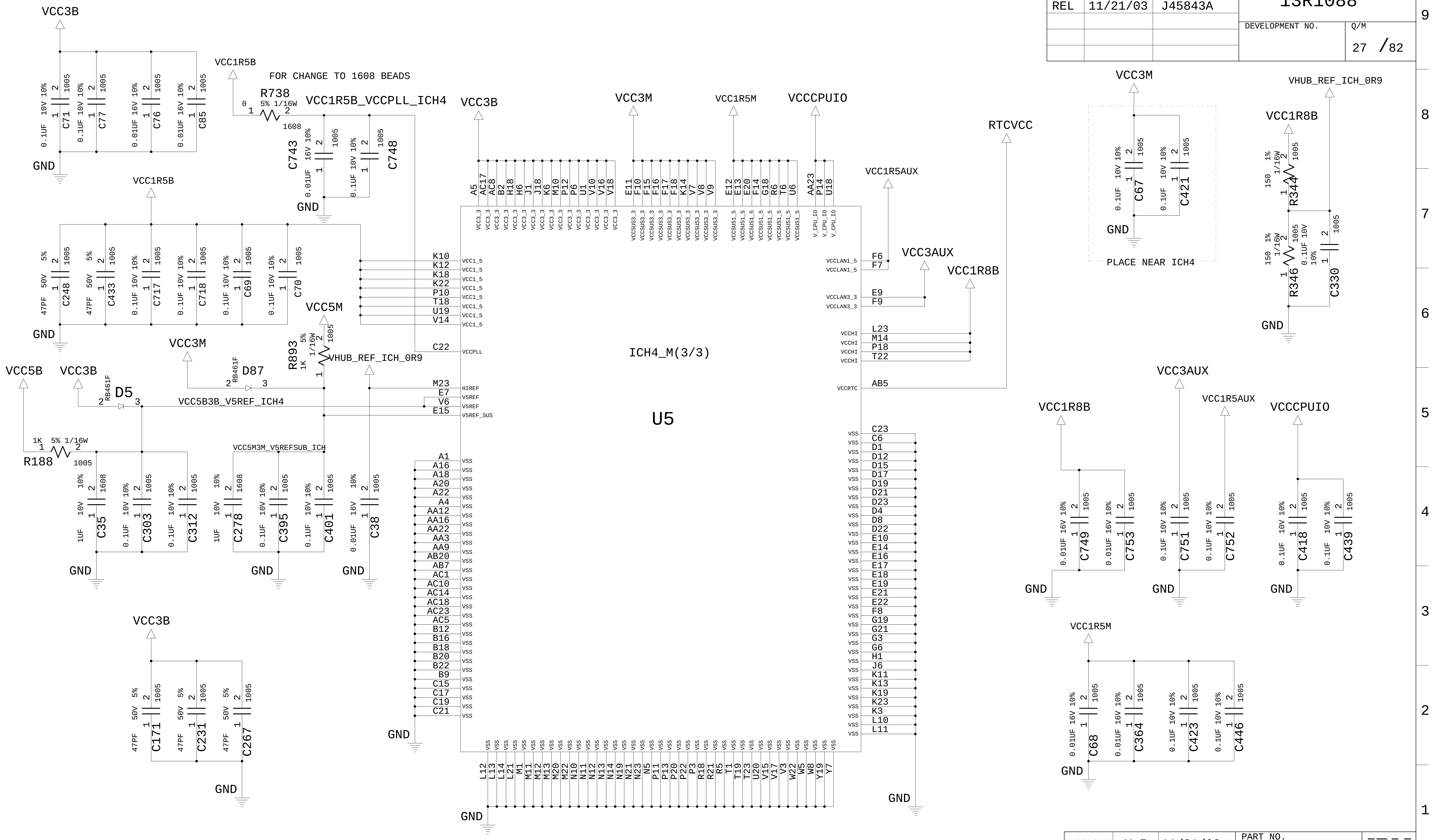

VCC3B
C71 0.1UF 10V 10% 1005
C77 0.1UF 10V 10% 1005
C76 0.01UF 16V 10% 1005
C85 0.01UF 16V 10% 1005
GND
VCC1R5B
FOR CHANGE TO 1608 BEADS
R738 5% 1/16W 1608
0
VCC1R5B_VCCPLL_ICH4
C743 0.01UF 16V 10% 1005
C748 0.1UF 10V 10% 1005
GND
VCC1R5B
C248 47PF 50V 5% 1005
C433 47PF 50V 5% 1005
C717 0.1UF 10V 10% 1005
C718 0.1UF 10V 10% 1005
C69 0.1UF 10V 10% 1005
C70 0.1UF 10V 10% 1005
GND
VCC5M
R893 1K 5% 1/16W 1005
VHUB_REF_ICH_0R9
VCC3M
D87 RB461F
VCC5B
VCC3B
D5 RB461F
VCC5B3B_V5REF_ICH4
R188 1K 5% 1/16W 1005
VCC5M3M_V5REFSUB_ICH
C35 1UF 10V 10% 1608
C303 0.1UF 10V 10% 1005
C312 0.1UF 10V 10% 1005
C278 1UF 10V 10% 1608
C395 0.1UF 10V 10% 1005
C401 0.1UF 10V 10% 1005
C38 0.01UF 16V 10% 1005
GND
VCC3B
C171 47PF 50V 5% 1005
C231 47PF 50V 5% 1005
C267 47PF 50V 5% 1005
GND
VCC3B
A5 AC17 AC8 B2 H18 H6 J1 J18 K6 M10 P12 P6 U1 V10 V16 V18
VCC3_3
VCC3M
E11 F10 F15 F16 F17 F18 K14 V7 V8 V9
VCCSUS3_3
VCC1R5M
E12 E13 E20 F14 G18 R6 T6 U6
VCCSUS1_5
VCCCPUIO
AA23 P14 U18
V_CPU_IO
K10 K12 K18 K22 P10 T18 U19 V14
VCC1_5
C22 VCCPLL
M23 HIREF
E7 V5REF
V6 V5REF
E15 V5REF_SUS
A1 A16 A18 A20 A22 A4 AA12 AA16 AA22 AA3 AA9 AB20 AB7 AC1 AC10 AC14 AC18 AC23 AC5 B12 B16 B18 B20 B22 B9 C15 C17 C19 C21
VSS
GND
ICH4_M(3/3)
U5
VCC1R5AUX
F6 F7 VCCLAN1_5
VCC3AUX
E9 F9 VCCLAN3_3
VCC1R8B
L23 M14 P18 T22 VCCHI
RTCVCC
AB5 VCCRTC
C23 C6 D1 D12 D15 D17 D19 D21 D23 D4 D8 D22 E10 E14 E16 E17 E18 E19 E21 E22 F8 G19 G21 G3 G6 H1 J6 K11 K13 K19 K23 K3 L10 L11
VSS
GND
L12 L13 L14 L21 M1 M11 M12 M13 M20 M22 N10 N11 N12 N13 N14 N19 N21 N23 N5 P11 P13 P20 P22 P3 R18 R21 R5 T1 T19 T23 U20 V15 V17 V3 W22 W5 W8 Y19 Y7
VSS
GND
VCC3M
C67 0.1UF 10V 10% 1005
C421 0.1UF 10V 10% 1005
GND
PLACE NEAR ICH4
VHUB_REF_ICH_0R9
VCC1R8B
R344 150 1% 1/16W 1005
R346 150 1% 1/16W 1005
C330 0.1UF 10V 10% 1005
GND
VCC1R8B
C749 0.01UF 16V 10% 1005
C753 0.01UF 16V 10% 1005
GND
VCC3AUX
C751 0.1UF 10V 10% 1005
C752 0.1UF 10V 10% 1005
VCC1R5AUX
GND
VCCCPUIO
C418 0.1UF 10V 10% 1005
C439 0.1UF 10V 10% 1005
GND
VCC1R5M
C68 0.01UF 16V 10% 1005
C364 0.01UF 16V 10% 1005
C423 0.1UF 10V 10% 1005
C446 0.1UF 10V 10% 1005
GND

DESIGNER	Y.I	11/21/03
CHECKED	Y.Y	11/21/03
APPROVED	K.T	11/21/03
CLASS	K.T	11/21/03

PART NO. 13R1088

IBM

TITLE ROME-1 RWK(V099)

ICH4-M (3/3)

THIS DOCUMENT IS THE PROPERTY OF IBM ITS USE IS AUTHORIZED ONLY FOR RESPONDING TO A REQUEST FOR QUOTATION OR FOR THE PERFORMANCE OF WORK FOR IBM. ALL QUESTIONS MUST BE REFERRED TO THE IBM PURCHASING DEPARTMENT.

IBM CONFIDENTIAL

13R1088

	DATE	EC NO.	PART NO. 13R1088
REL	11/21/03	J45843A	DEVELOPMENT NO.
			Q/M 28 /82

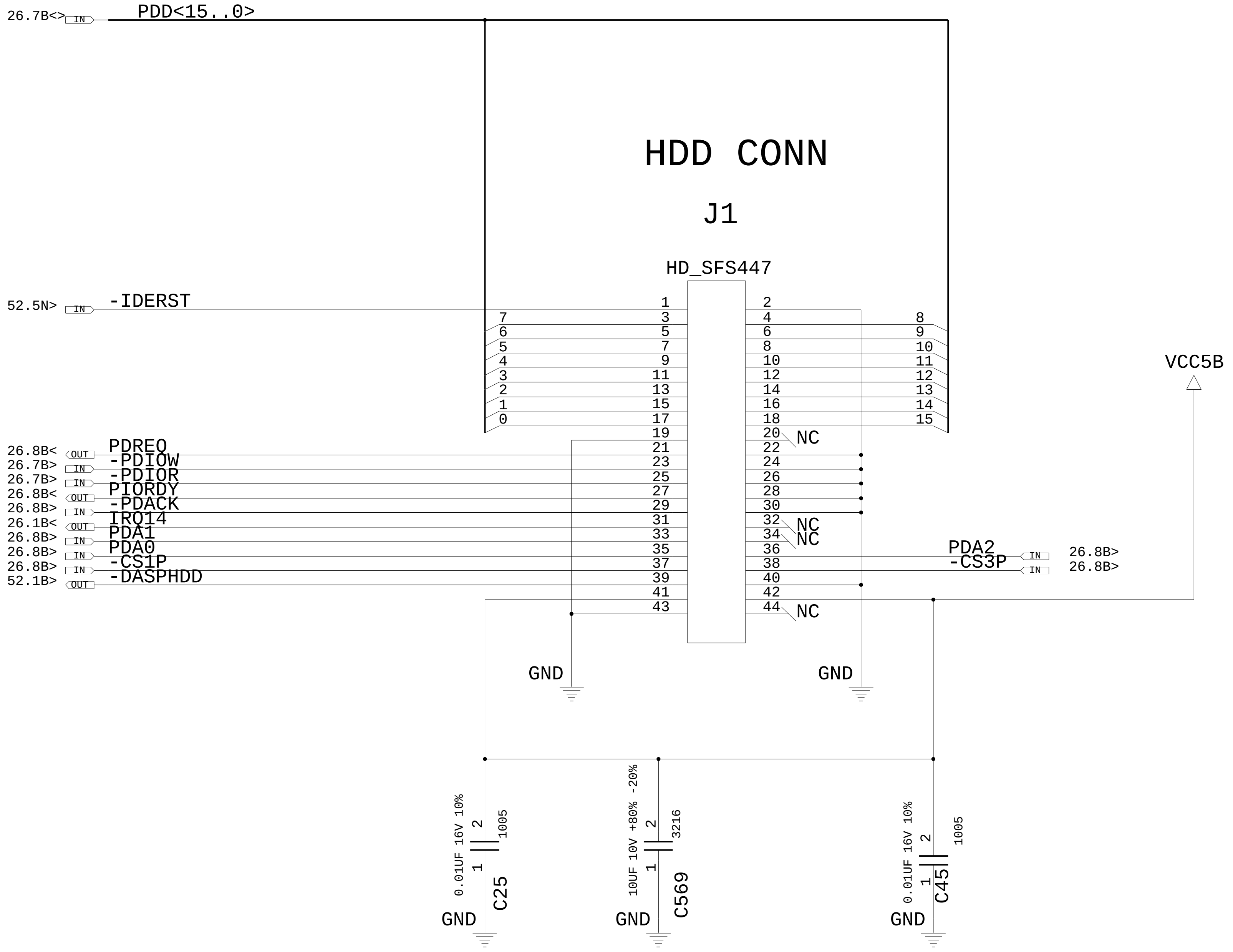

26.7B<> IN PDD<15..0>
HDD CONN
J1
HD_SFS447
52.5N> IN -IDERST
1 2
7 3 4 8
6 5 6 9
5 7 8 10
4 9 10 11
3 11 12 12
2 13 14 13
1 15 16 14
0 17 18 15
19 20 NC
26.8B< OUT PDREQ 21 22
26.7B> IN -PDIOW 23 24
26.7B> IN -PDIOR 25 26
26.8B< OUT PIORDY 27 28
26.8B> IN -PDACK 29 30
26.1B< OUT IRQ14 31 32 NC
26.8B> IN PDA1 33 34 NC
26.8B> IN PDA0 35 36 PDA2 IN 26.8B>
26.8B> IN -CS1P 37 38 -CS3P IN 26.8B>
52.1B> OUT -DASPHDD 39 40
41 42
43 44 NC
VCC5B
GND
GND
0.01UF 16V 10% 2 1 1005 C25 GND
10UF 10V +80% -20% 2 1 3216 C569 GND
0.01UF 16V 10% 2 1 1005 C45 GND

13R1088

DESIGNER	Y.I	11/21/03	PART NO. 13R1088 IBM
CHECKED	Y.Y	11/21/03	TITLE ROME-1 RWK(V099)
APPROVED	K.T	11/21/03	
CLASS	K.T	11/21/03	HDD I/F CONNECTOR

IBM CONFIDENTIAL

	DATE	EC NO.
REL	11/21/03	J45843A

PART NO. 13R1088

DEVELOPMENT NO.

Q/M 29 /82

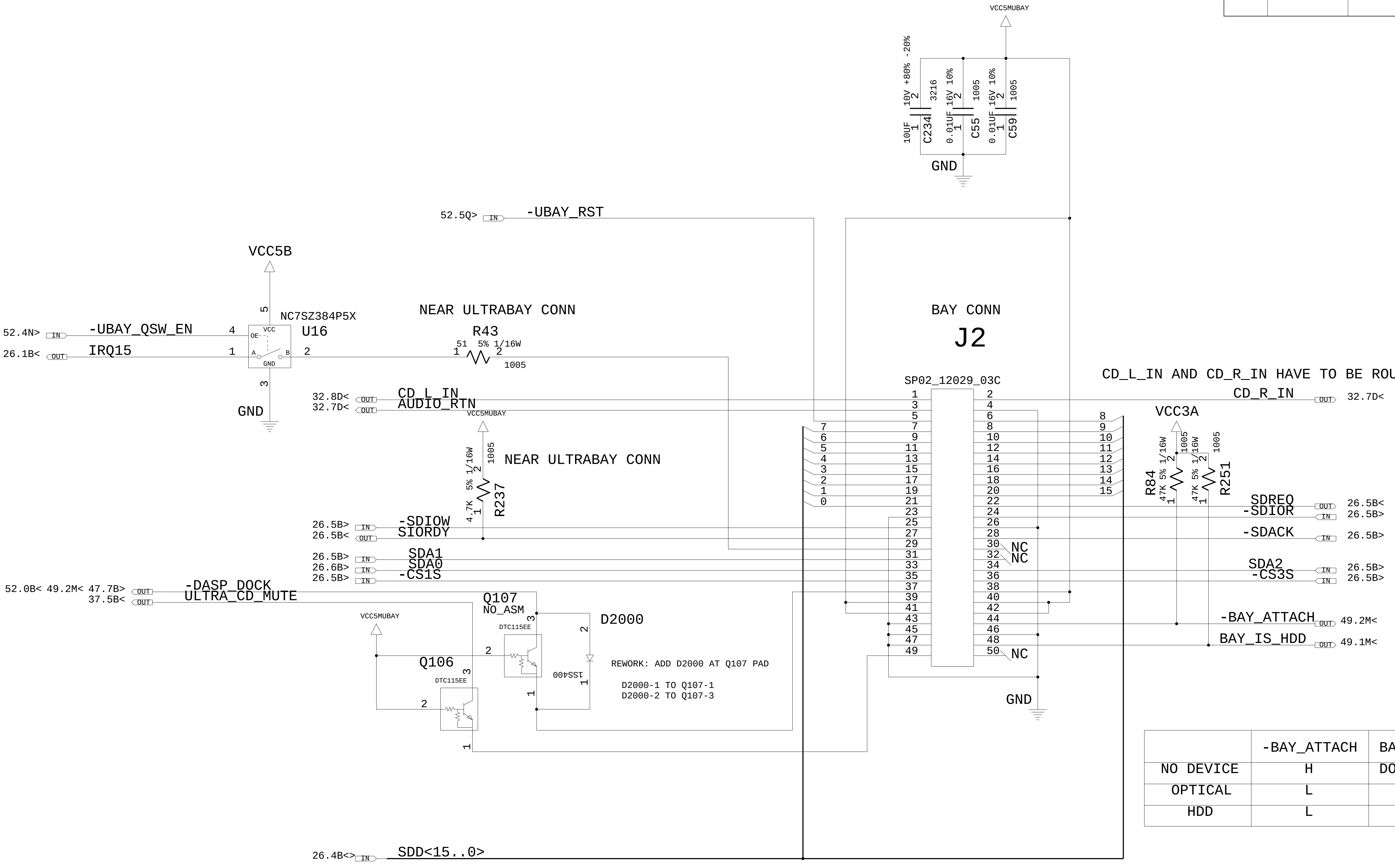
VCC5MUBAY
10V +80% -20%
3216
10UF
C234
16V 10%
1005
0.01UF
C55
C59
GND
52.5Q>
IN
-UBAY_RST
VCC5B
NC7SZ384P5X
U16
VCC
OE
A
B
GND
52.4N>
-UBAY_QSW_EN
26.1B<
OUT
IRQ15
NEAR ULTRABAY CONN
R43
51 5% 1/16W
1005
BAY CONN
J2
SP02_12029_03C
CD_R_IN
32.7D<
VCC3A
32.8D<
CD_L_IN
32.7D<
AUDIO_RTN
R237
4.7K 5% 1/16W
R84
47K 5% 1/16W
R251
NC
26.5B>
-SDIOW
26.5B<
SIORDY
26.5B>
SDA1
26.6B>
SDA0
26.5B>
-CS1S
SDREQ
26.5B<
-SDIOR
26.5B>
-SDACK
26.5B>
SDA2
26.5B>
-CS3S
26.5B>
52.0B< 49.2M< 47.7B>
-DASP_DOCK
37.5B<
ULTRA_CD_MUTE
Q107
NO_ASM
DTC115EE
D2000
1SS400
Q106
DTC115EE
-BAY_ATTACH
49.2M<
BAY_IS_HDD
49.1M<
26.4B<>
SDD<15..0>

CD_L_IN AND CD_R_IN HAVE TO BE ROUTED IN PARALLEL.

REWORK: ADD D2000 AT Q107 PAD

D2000-1 TO Q107-1
D2000-2 TO Q107-3

	-BAY_ATTACH	BAY_IS_HDD
NO DEVICE	H	DON'T CARE
OPTICAL	L	L
HDD	L	H

DESIGNER	Y.I	11/21/03
CHECKED	Y.Y	11/21/03
APPROVED	K.T	11/21/03
CLASS	K.T	11/21/03

PART NO. 13R1088

IBM

TITLE ROME-1 RWK(V099)

CLEAN SHEET BAY

IBM CONFIDENTIAL

13R1088

	DATE	EC NO.
REL	11/21/03	J45843A

PART NO.
13R1088

DEVELOPMENT NO.

Q/M
30 /82

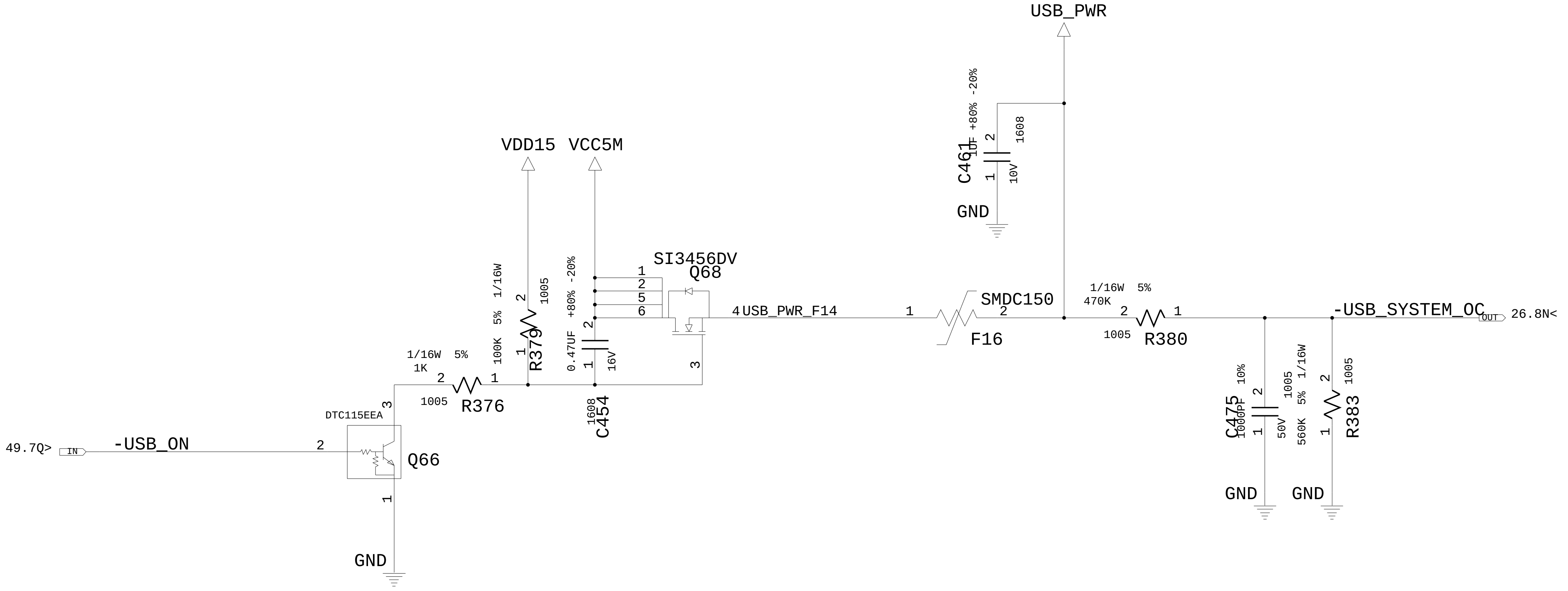
USB_PWR
C461
1UF +80% -20%
1608
10V
2
1
GND
VDD15
VCC5M
SI3456DV
Q68
1
2
5
6
4
3
USB_PWR_F14
1
SMDC150
2
F16
1/16W 5%
470K
2
1
1005
R380
-USB_SYSTEM_OC
OUT
26.8N<
1/16W
5%
100K
2
1
1005
R379
0.47UF
+80% -20%
2
1
16V
1608
C454
1/16W 5%
1K
2
1
1005
R376
DTC115EEA
3
2
1
Q66
49.7Q>
IN
-USB_ON
GND
10%
2
1
1000PF
50V
1005
C475
GND
1/16W
5%
560K
2
1
1005
R383
GND

DESIGNER	Y.I	11/21/03
CHECKED	Y.Y	11/21/03
APPROVED	K.T	11/21/03
CLASS	K.T	11/21/03

PART NO.
13R1088

IBM

TITLE ROME-1 RWK(V099)

USB INTERFACE

IBM CONFIDENTIAL

13R1088

	DATE	EC NO.
REL	11/21/03	J45843A

PART NO. 13R1088

DEVELOPMENT NO.

Q/M 31 /82

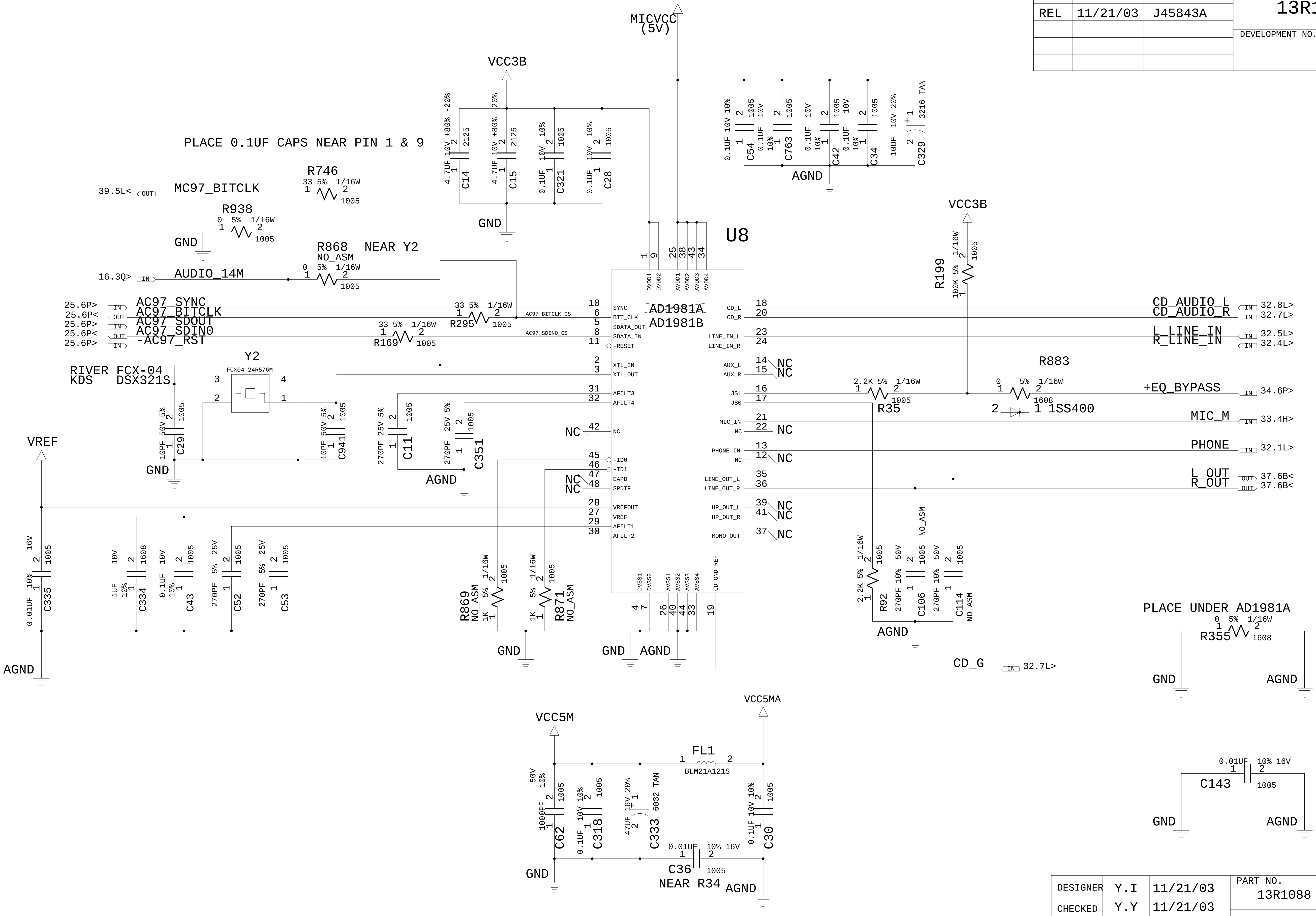

VCC3B
MICVCC (5V)
PLACE 0.1UF CAPS NEAR PIN 1 & 9
4.7UF 10V +80% -20% 2125 C14
4.7UF 10V +80% -20% 2125 C15
0.1UF 10V 10% 1005 C321
0.1UF 10V 10% 1005 C28
GND
0.1UF 10V 10% 1005 C54
0.1UF 10V 10% 1005 C763
0.1UF 10V 10% 1005 C42
0.1UF 10V 10% 1005 C34
10UF 10V 20% 3216 TAN C329
AGND
39.5L< OUT MC97_BITCLK
R746 33 5% 1/16W 1005
R938 0 5% 1/16W 1005
R868 NEAR Y2 NO_ASM 0 5% 1/16W 1005
16.3Q> IN AUDIO_14M
25.6P> IN AC97_SYNC
25.6P< OUT AC97_BITCLK
25.6P> IN AC97_SDOUT
25.6P< OUT AC97_SDIN0
25.6P> IN -AC97_RST
R295 33 5% 1/16W 1005
R169 33 5% 1/16W 1005
AC97_BITCLK_CS
AC97_SDIN0_CS
Y2
RIVER FCX-04
KDS DSX321S
FCX04_24R576M
10PF 50V 5% 1005 C29
10PF 50V 5% 1005 C941
270PF 25V 5% 1005 C11
270PF 25V 5% 1005 C351
U8
AD1981A
AD1981B
DVDD1 DVDD2 AVDD1 AVDD2 AVDD3 AVDD4
SYNC BIT_CLK SDATA_OUT SDATA_IN -RESET XTL_IN XTL_OUT AFILT3 AFILT4 NC -ID0 -ID1 EAPD SPDIF VREFOUT VREF AFILT1 AFILT2
DVSS1 DVSS2 AVSS1 AVSS2 AVSS3 AVSS4 CD_GND_REF
CD_L CD_R LINE_IN_L LINE_IN_R AUX_L AUX_R JS1 JS0 MIC_IN NC PHONE_IN NC LINE_OUT_L LINE_OUT_R HP_OUT_L HP_OUT_R MONO_OUT
VREF
0.01UF 10% 16V 1005 C335
1UF 10V 10% 1608 C334
0.1UF 10V 10% 1005 C43
270PF 5% 25V 1005 C52
270PF 5% 25V 1005 C53
R869 NO_ASM 1K 5% 1/16W 1005
R871 NO_ASM 1K 5% 1/16W 1005
VCC3B
R199 100K 5% 1/16W 1005
CD_AUDIO_L IN 32.8L>
CD_AUDIO_R IN 32.7L>
L_LINE_IN IN 32.5L>
R_LINE_IN IN 32.4L>
R35 2.2K 5% 1/16W 1005
R883 0 5% 1/16W 1608
+EQ_BYPASS IN 34.6P>
1SS400
MIC_M IN 33.4H>
PHONE IN 32.1L>
L_OUT OUT 37.6B<
R_OUT OUT 37.6B<
R92 2.2K 5% 1/16W 1005
C106 270PF 10% 50V 1005 NO_ASM
C114 270PF 10% 50V 1005 NO_ASM
CD_G IN 32.7L>
PLACE UNDER AD1981A
R355 0 5% 1/16W 1608
0.01UF 10% 16V C143 1005
VCC5M
VCC5MA
FL1 BLM21A121S
1000PF 50V 10% 1005 C62
0.1UF 10V 10% 1005 C318
47UF 16V 20% 6032 TAN C333
0.1UF 10V 10% 1005 C30
0.01UF 10% 16V C36 1005
NEAR R34

13R1088

DESIGNER	Y.I	11/21/03
CHECKED	Y.Y	11/21/03
APPROVED	K.T	11/21/03
CLASS	K.T	11/21/03

PART NO. 13R1088

IBM

TITLE ROME-1 RWK(V099)

AUDIO AD1981A

THIS DOCUMENT IS THE PROPERTY OF IBM ITS USE IS AUTHORIZED ONLY FOR RESPONDING TO A REQUEST FOR QUOTATION OR FOR THE PERFORMANCE OF WORK FOR IBM. ALL QUESTIONS MUST BE REFERRED TO THE IBM PURCHASING DEPARTMENT.

IBM CONFIDENTIAL

	DATE	EC NO.
REL	11/21/03	J45843A

PART NO. 13R1088

DEVELOPMENT NO.

Q/M 32 /82

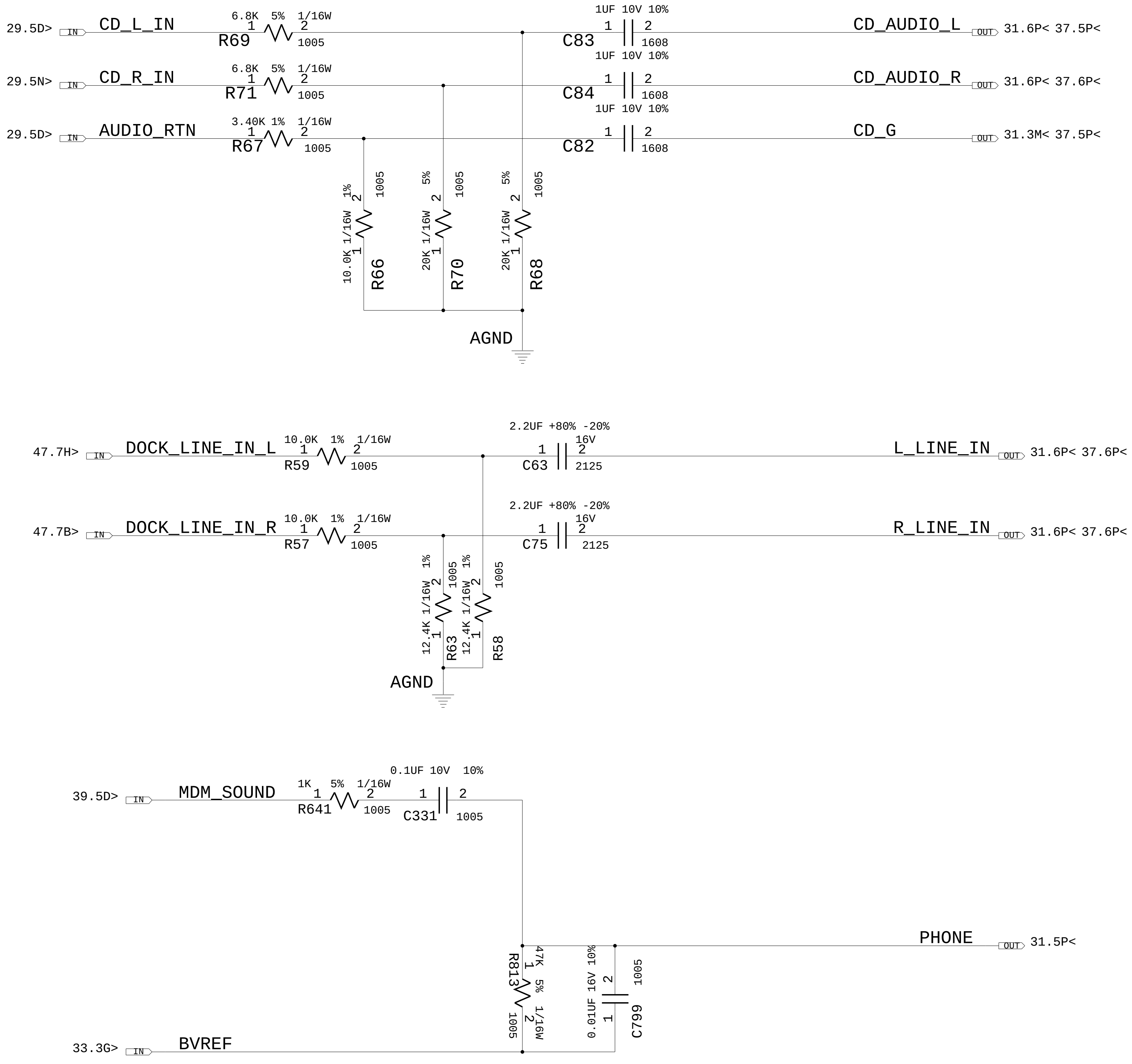
29.5D>
IN
CD_L_IN
6.8K 5% 1/16W
1 2
R69
1005
1UF 10V 10%
1 2
C83
1608
CD_AUDIO_L
OUT
31.6P< 37.5P<
29.5N>
IN
CD_R_IN
6.8K 5% 1/16W
1 2
R71
1005
1UF 10V 10%
1 2
C84
1608
CD_AUDIO_R
OUT
31.6P< 37.6P<
29.5D>
IN
AUDIO_RTN
3.40K 1% 1/16W
1 2
R67
1005
1UF 10V 10%
1 2
C82
1608
CD_G
OUT
31.3M< 37.5P<
10.0K 1/16W 1%
1005
R66
20K 1/16W 5%
1005
R70
20K 1/16W 5%
1005
R68
AGND
47.7H>
IN
DOCK_LINE_IN_L
10.0K 1% 1/16W
1 2
R59
1005
2.2UF +80% -20%
16V
1 2
C63
2125
L_LINE_IN
OUT
31.6P< 37.6P<
47.7B>
IN
DOCK_LINE_IN_R
10.0K 1% 1/16W
1 2
R57
1005
2.2UF +80% -20%
16V
1 2
C75
2125
R_LINE_IN
OUT
31.6P< 37.6P<
12.4K 1/16W 1%
1005
R63
12.4K 1/16W 1%
1005
R58
AGND
39.5D>
IN
MDM_SOUND
1K 5% 1/16W
1 2
R641
1005
0.1UF 10V 10%
1 2
C331
1005
PHONE
OUT
31.5P<
47K 5% 1/16W
R813
1005
0.01UF 16V 10%
1005
C799
33.3G>
IN
BVREF

13R1088

DESIGNER	Y.I	11/21/03
CHECKED	Y.Y	11/21/03
APPROVED	K.T	11/21/03
CLASS	K.T	11/21/03

PART NO. 13R1088

IBM

TITLE ROME-1 RWK(V099)

AUDIO MISC

IBM CONFIDENTIAL

	DATE	EC NO.	PART NO. 13R1088
REL	11/21/03	J45843A	DEVELOPMENT NO.
			Q/M 33 /82

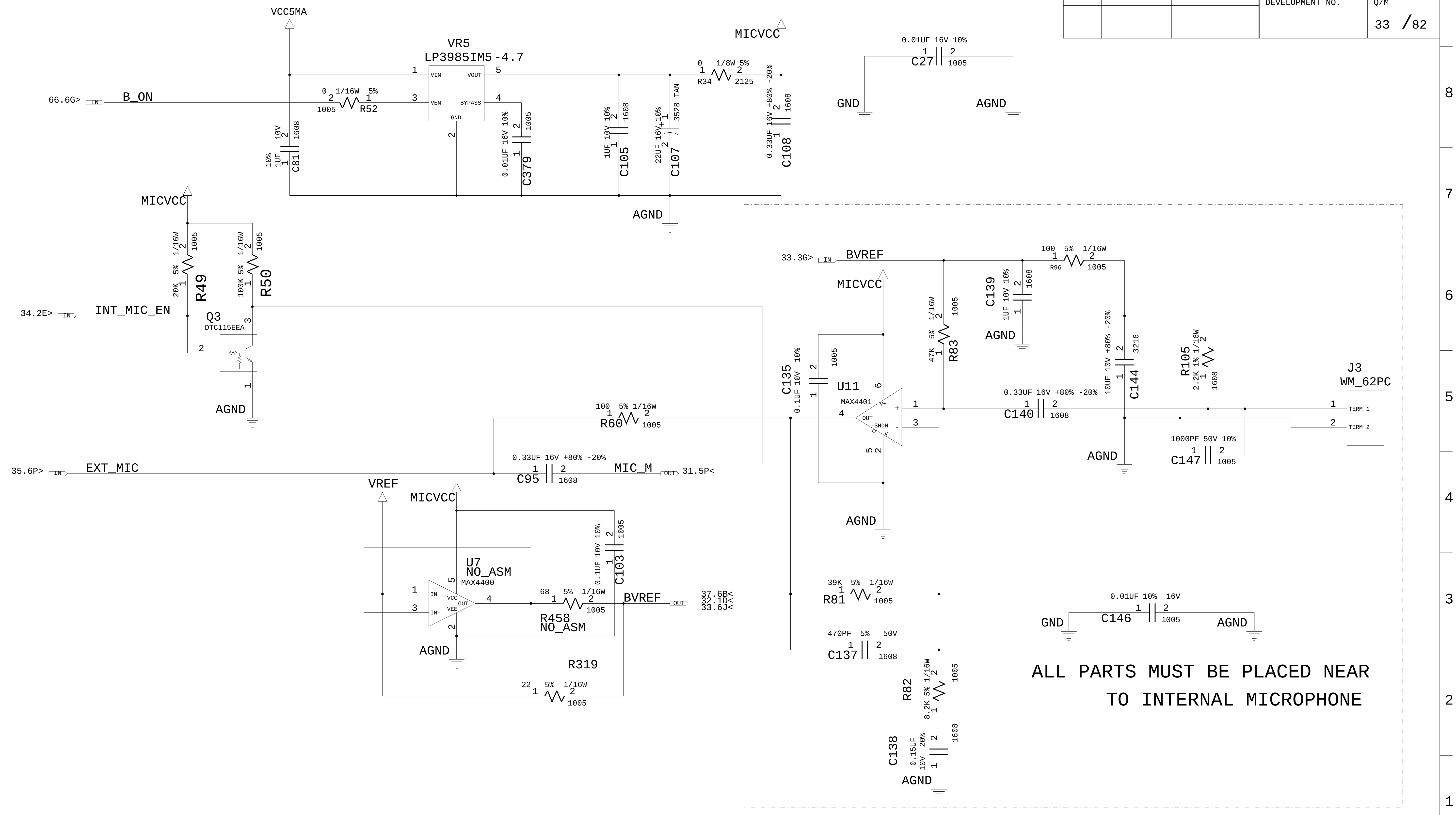

VCC5MA
VR5
LP3985IM5-4.7
VIN
VOUT
VEN
BYPASS
GND
66.6G>
IN
B_ON
0 1/16W 5%
1005
R52
C81
1UF 10V 10%
1608
0.01UF 16V 10%
C379
1005
1UF 10V 10%
C105
1608
22UF 16V 10%
C107
3528 TAN
0 1/8W 5%
R34
2125
MICVCC
0.33UF 16V +80% -20%
C108
1608
AGND
0.01UF 16V 10%
C27
1005
GND
AGND
MICVCC
R49
20K 5% 1/16W
1005
R50
100K 5% 1/16W
1005
34.2E>
INT_MIC_EN
Q3
DTC115EEA
AGND
33.3G>
BVREF
100 5% 1/16W
R96
1005
MICVCC
C139
1UF 10V 10%
1608
AGND
R83
47K 5% 1/16W
1005
C135
0.1UF 10V 10%
1005
U11
MAX4401
V+
OUT
SHDN
V-
C144
10UF 10V +80% -20%
3216
R105
2.2K 1% 1/16W
1608
J3
WM_62PC
TERM 1
TERM 2
0.33UF 16V +80% -20%
C140
1608
100 5% 1/16W
R60
1005
1000PF 50V 10%
C147
1005
AGND
35.6P>
EXT_MIC
0.33UF 16V +80% -20%
C95
1608
MIC_M
OUT
31.5P<
VREF
MICVCC
AGND
0.1UF 10V 10%
C103
1005
U7
NO_ASM
MAX4400
IN+
IN-
VCC
VEE
OUT
68 5% 1/16W
R458
NO_ASM
1005
BVREF
37.6B<
32.1D<
33.6J<
AGND
R319
22 5% 1/16W
1005
39K 5% 1/16W
R81
1005
470PF 5% 50V
C137
1608
R82
8.2K 5% 1/16W
1005
C138
0.15UF 10V 20%
1608
AGND
0.01UF 10% 16V
C146
1005
GND
AGND

ALL PARTS MUST BE PLACED NEAR
TO INTERNAL MICROPHONE

DESIGNER	Y.I	11/21/03	PART NO. 13R1088
CHECKED	Y.Y	11/21/03	TITLE ROME-1 RWK(V099)
APPROVED	K.T	11/21/03	AUDIO INT MIC
CLASS	K.T	11/21/03	

THIS DOCUMENT IS THE PROPERTY OF IBM ITS USE IS AUTHORIZED ONLY FOR RESPONDING TO A REQUEST FOR QUOTATION OR FOR THE PERFORMANCE OF WORK FOR IBM. ALL QUESTIONS MUST BE REFERRED TO THE IBM PURCHASING DEPARTMENT.

IBM CONFIDENTIAL

13R1088

	DATE	EC NO.	PART NO. 13R1088	
REL	11/21/03	J45843A	DEVELOPMENT NO.	Q/M 34 /82

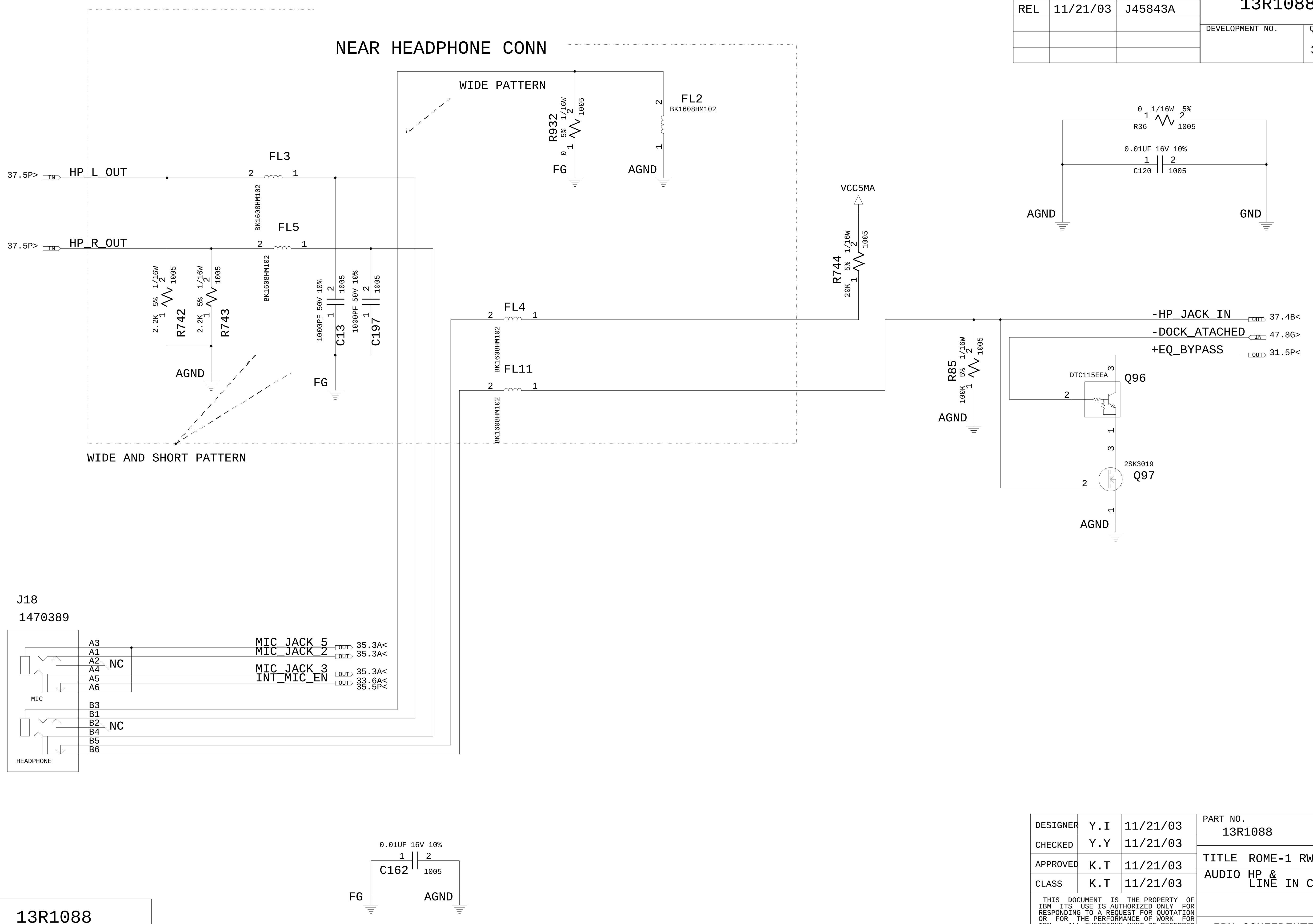
NEAR HEADPHONE CONN
WIDE PATTERN
WIDE AND SHORT PATTERN
37.5P> IN HP_L_OUT
37.5P> IN HP_R_OUT
FL3 BK1608HM102
FL5 BK1608HM102
FL4 BK1608HM102
FL11 BK1608HM102
FL2 BK1608HM102
R742 2.2K 5% 1/16W 1005
R743 2.2K 5% 1/16W 1005
C13 1000PF 50V 10% 1005
C197 1000PF 50V 10% 1005
R932 0 5% 1/16W 1005
R744 20K 5% 1/16W 1005
R85 100K 5% 1/16W 1005
R36 0 1/16W 5% 1005
C120 0.01UF 16V 10% 1005
C162 0.01UF 16V 10% 1005
VCC5MA
AGND
FG
GND
-HP_JACK_IN OUT 37.4B<
-DOCK_ATACHED IN 47.8G>
+EQ_BYPASS OUT 31.5P<
DTC115EEA Q96
2SK3019 Q97
J18
1470389
MIC
HEADPHONE
A3 A1 A2 A4 A5 A6
B3 B1 B2 B4 B5 B6
NC
MIC_JACK_5 OUT 35.3A<
MIC_JACK_2 OUT 35.3A<
MIC_JACK_3 OUT 35.3A<
INT_MIC_EN OUT 33.6A< 35.5P<

13R1088

DESIGNER	Y.I	11/21/03	PART NO. 13R1088	IBM
CHECKED	Y.Y	11/21/03	TITLE ROME-1 RWK(V099)	
APPROVED	K.T	11/21/03	AUDIO HP & LINE IN CONN	
CLASS	K.T	11/21/03		

IBM CONFIDENTIAL

	DATE	EC NO.
REL	11/21/03	J45843A

PART NO. 13R1088

DEVELOPMENT NO.

Q/M 35 /82

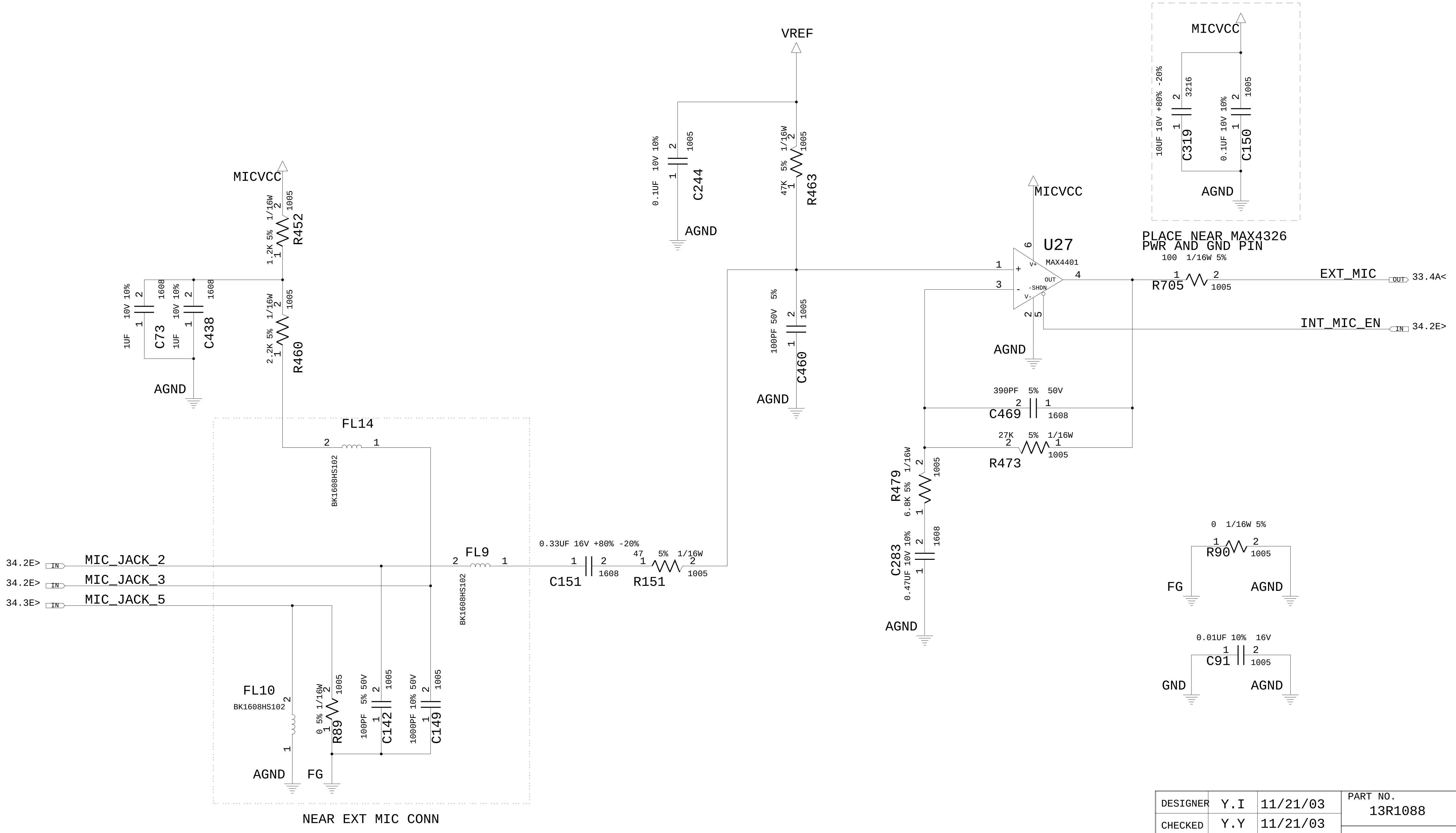
VREF
MICVCC
AGND
0.1UF 10V 10% 1 2 1005
C244
47K 5% 1/16W 1 2 1005
R463
100PF 50V 5% 1 2 1005
C460
MICVCC
1.2K 5% 1/16W 1 2 1005
R452
2.2K 5% 1/16W 1 2 1005
R460
1UF 10V 10% 1 2 1608
C73
1UF 10V 10% 1 2 1608
C438
AGND
FL14
2 1
BK1608HS102
MICVCC
U27
MAX4401
V+
OUT
-SHDN
V-
+
-
1
3
6
4
2
5
AGND
PLACE NEAR MAX4326
PWR AND GND PIN
MICVCC
10UF 10V +80% -20% 1 2 3216
C319
0.1UF 10V 10% 1 2 1005
C150
AGND
100 1/16W 5%
1 2
R705
1005
EXT_MIC
OUT
33.4A<
INT_MIC_EN
IN
34.2E>
390PF 5% 50V
2 1
C469
1608
27K 5% 1/16W
2 1
R473
1005
R479
6.8K 5% 1/16W 1 2 1005
C283
0.47UF 10V 10% 1 2 1608
AGND
0 1/16W 5%
1 2
R90
1005
FG
AGND
0.01UF 10% 16V
1 2
C91
1005
GND
AGND
34.2E>
IN
MIC_JACK_2
34.2E>
IN
MIC_JACK_3
34.3E>
IN
MIC_JACK_5
FL9
2 1
BK1608HS102
0.33UF 16V +80% -20%
1 2
C151
1608
47 5% 1/16W
1 2
R151
1005
FL10
BK1608HS102
2
1
AGND
0 5% 1/16W 1 2 1005
R89
FG
100PF 5% 50V 1 2 1005
C142
1000PF 10% 50V 1 2 1005
C149
NEAR EXT MIC CONN

DESIGNER	Y.I	11/21/03
CHECKED	Y.Y	11/21/03
APPROVED	K.T	11/21/03
CLASS	K.T	11/21/03

PART NO. 13R1088

IBM

TITLE ROME-1 RWK(V099)

AUDIO EXT MIC CONN

IBM CONFIDENTIAL

	DATE	EC NO.
REL	11/21/03	J45843A

PART NO.
13R1088

DEVELOPMENT NO.

Q/M
36 /82

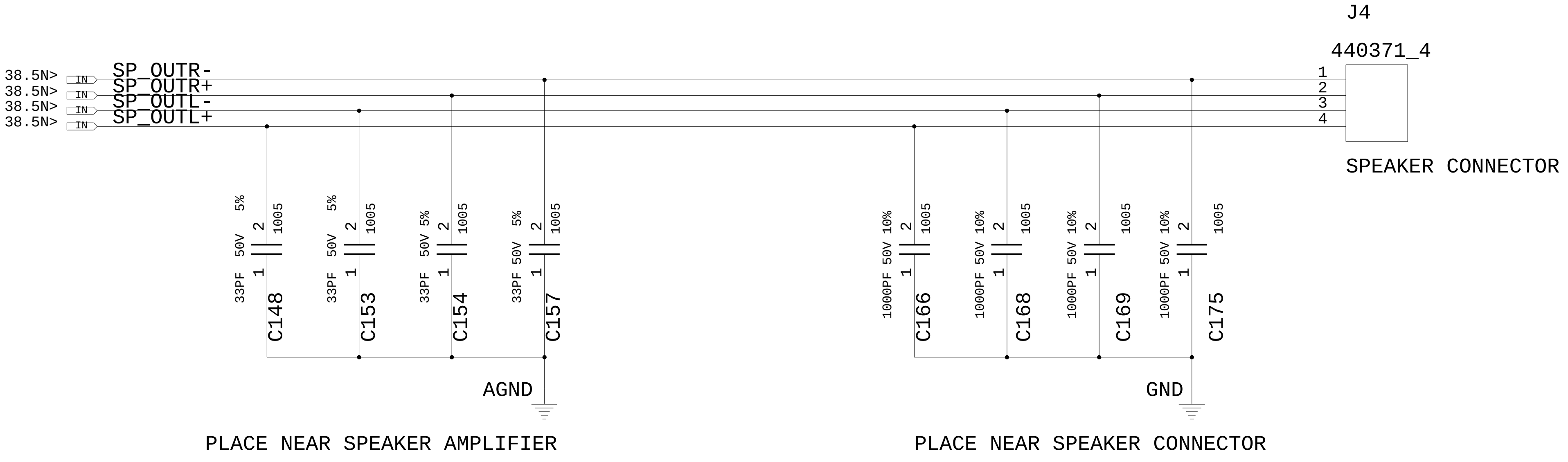
38.5N>
38.5N>
38.5N>
38.5N>
IN
IN
IN
IN
SP_OUTR-
SP_OUTR+
SP_OUTL-
SP_OUTL+
J4
440371_4
1
2
3
4
SPEAKER CONNECTOR
33PF 50V 5% 1005
C148
33PF 50V 5% 1005
C153
33PF 50V 5% 1005
C154
33PF 50V 5% 1005
C157
1000PF 50V 10% 1005
C166
1000PF 50V 10% 1005
C168
1000PF 50V 10% 1005
C169
1000PF 50V 10% 1005
C175
1
2
AGND
GND

PLACE NEAR SPEAKER AMPLIFIER

PLACE NEAR SPEAKER CONNECTOR

DESIGNER	Y.I	11/21/03	PART NO. 13R1088
CHECKED	Y.Y	11/21/03	TITLE ROME-1 RWK(V099)
APPROVED	K.T	11/21/03	
CLASS	K.T	11/21/03	AUDIO SPEAKER

IBM CONFIDENTIAL

13R1088

	DATE	EC NO.
REL	11/21/03	J45843A

PART NO. 13R1088

DEVELOPMENT NO.

Q/M 37 /82

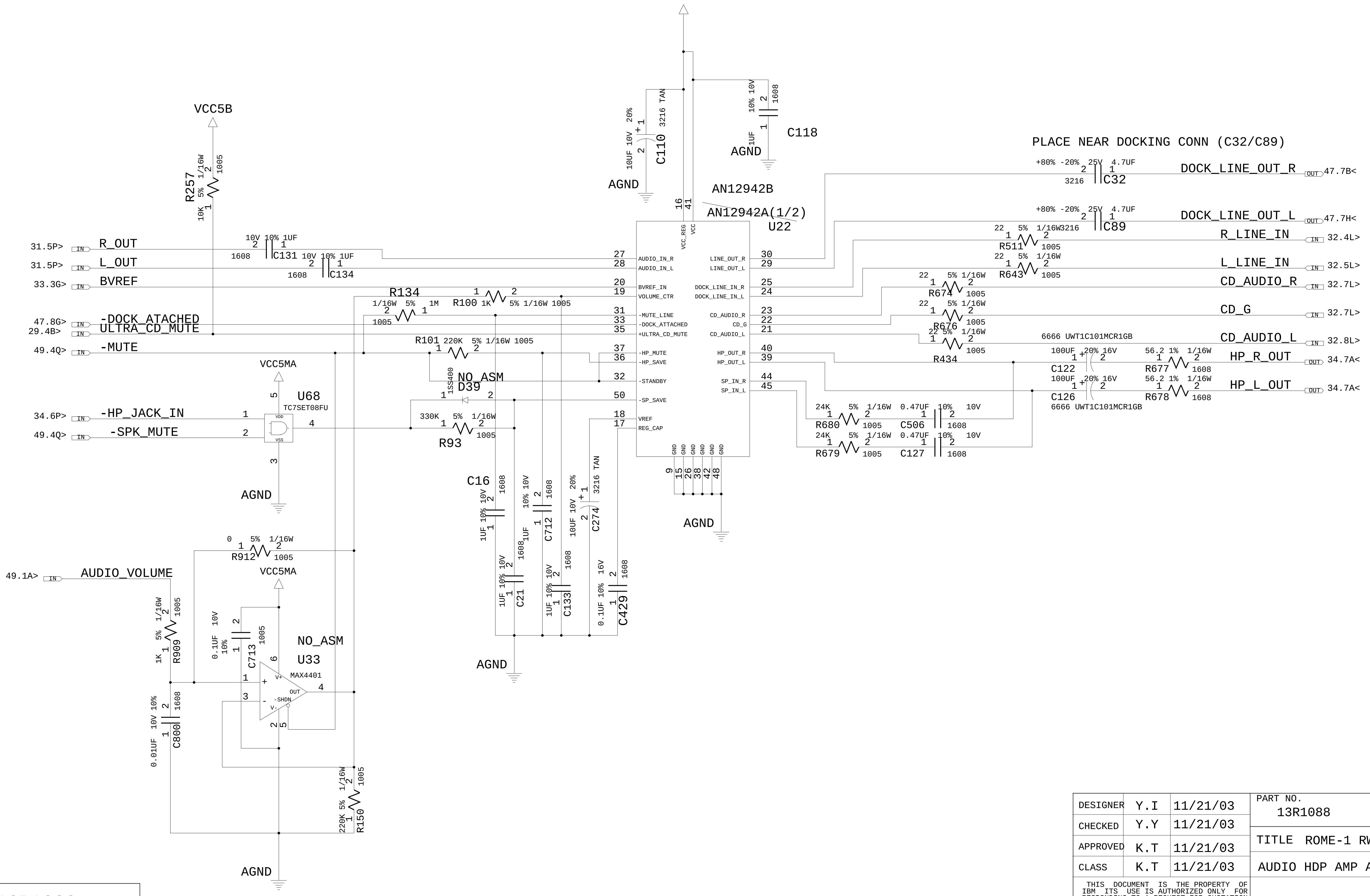
VCC5MA
VCC5B
R257 10K 5% 1/16W 1005
C110 10UF 10V 20% 3216 TAN
C118 1UF 10% 10V 1608
AGND
AN12942B
AN12942A(1/2)
U22
PLACE NEAR DOCKING CONN (C32/C89)
31.5P> R_OUT
31.5P> L_OUT
33.3G> BVREF
47.8G> -DOCK_ATACHED
29.4B> ULTRA_CD_MUTE
49.4Q> -MUTE
34.6P> -HP_JACK_IN
49.4Q> -SPK_MUTE
49.1A> AUDIO_VOLUME
C131 10V 10% 1UF 1608
C134 10V 10% 1UF 1608
R134 1/16W 5% 1M 1005
R100 1K 5% 1/16W 1005
R101 220K 5% 1/16W 1005
NO_ASM
D39 1SS400
U68 TC7SET08FU
R93 330K 5% 1/16W 1005
C16 1UF 10% 10V 1608
C712 1UF 10% 10V 1608
C274 10UF 10V 20% 3216 TAN
C21 1UF 10% 10V 1608
C133 1UF 10% 10V 1608
C429 0.1UF 10% 16V 1608
R912 0 5% 1/16W 1005
R909 1K 5% 1/16W 1005
C713 0.1UF 10V 10% 1005
NO_ASM
U33 MAX4401
C800 0.01UF 10V 10% 1608
R150 220K 5% 1/16W 1005
AUDIO_IN_R
AUDIO_IN_L
BVREF_IN
VOLUME_CTR
-MUTE_LINE
-DOCK_ATTACHED
+ULTRA_CD_MUTE
-HP_MUTE
-HP_SAVE
-STANDBY
-SP_SAVE
VREF
REG_CAP
VCC_REG
VCC
LINE_OUT_R
LINE_OUT_L
DOCK_LINE_IN_R
DOCK_LINE_IN_L
CD_AUDIO_R
CD_G
CD_AUDIO_L
HP_OUT_R
HP_OUT_L
SP_IN_R
SP_IN_L
GND
C32 +80% -20% 25V 4.7UF 3216
DOCK_LINE_OUT_R 47.7B<
C89 +80% -20% 25V 4.7UF 3216
DOCK_LINE_OUT_L 47.7H<
R511 22 5% 1/16W 1005
R_LINE_IN 32.4L>
R643 22 5% 1/16W 1005
L_LINE_IN 32.5L>
R674 22 5% 1/16W 1005
CD_AUDIO_R 32.7L>
R676 22 5% 1/16W 1005
CD_G 32.7L>
R434 22 5% 1/16W 1005
CD_AUDIO_L 32.8L>
C122 100UF 20% 16V 6666 UWT1C101MCR1GB
R677 56.2 1% 1/16W 1608
HP_R_OUT 34.7A<
C126 100UF 20% 16V 6666 UWT1C101MCR1GB
R678 56.2 1% 1/16W 1608
HP_L_OUT 34.7A<
R680 24K 5% 1/16W 1005
C506 0.47UF 10% 10V 1608
R679 24K 5% 1/16W 1005
C127 0.47UF 10% 10V 1608

13R1088

DESIGNER	Y.I	11/21/03
CHECKED	Y.Y	11/21/03
APPROVED	K.T	11/21/03
CLASS	K.T	11/21/03

PART NO. 13R1088

IBM

TITLE ROME-1 RWK(V099)

AUDIO HDP AMP AN12942A

IBM CONFIDENTIAL

	DATE	EC NO.
REL	11/21/03	J45843A

PART NO. 13R1088

DEVELOPMENT NO.

Q/M 38 /82

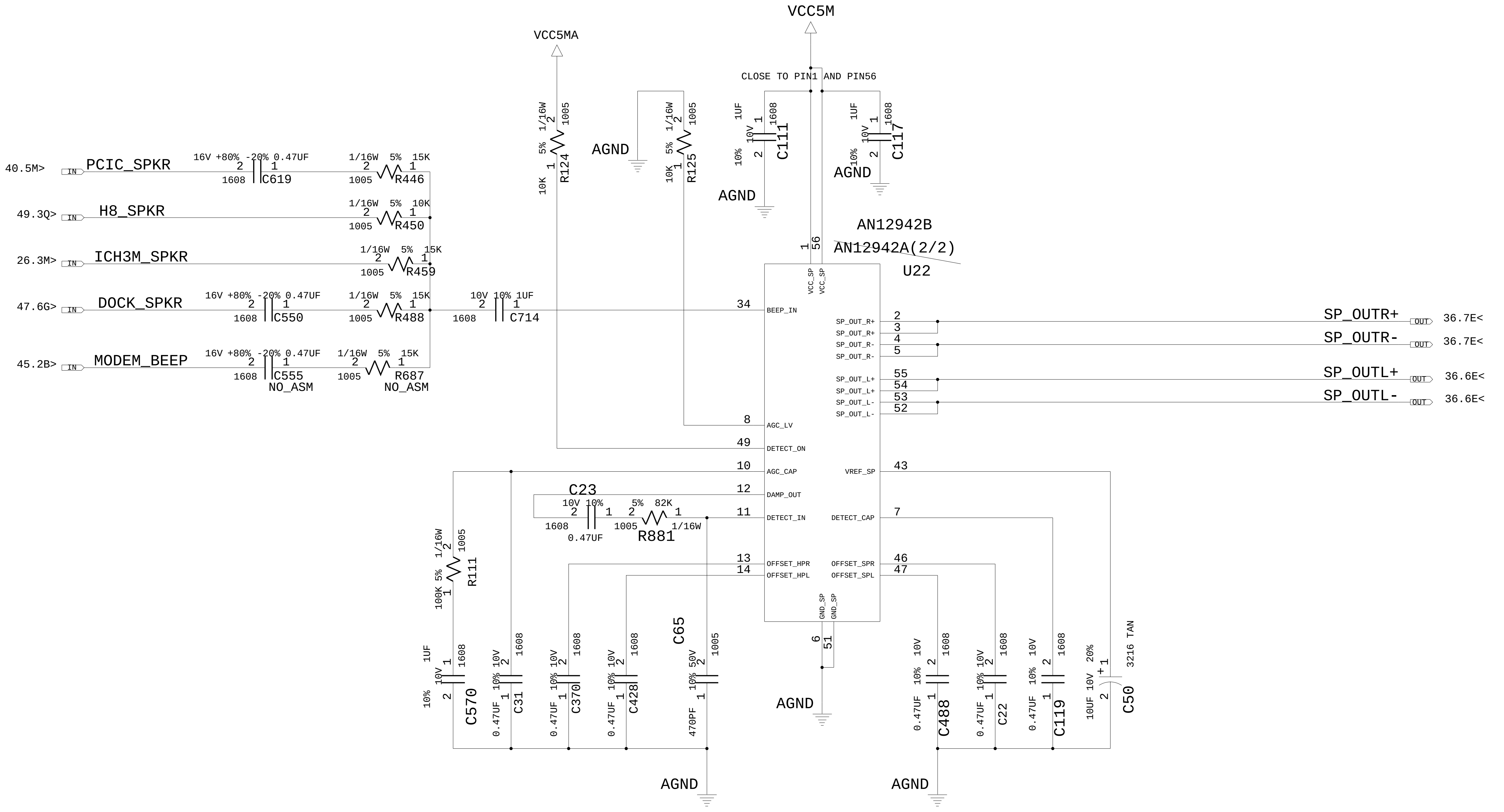
VCC5M
VCC5MA
CLOSE TO PIN1 AND PIN56
AGND
40.5M> IN PCIC_SPKR
16V +80% -20% 0.47UF 2 1 1608 C619
1/16W 5% 15K 2 1 1005 R446
49.3Q> IN H8_SPKR
1/16W 5% 10K 2 1 1005 R450
26.3M> IN ICH3M_SPKR
1/16W 5% 15K 2 1 1005 R459
47.6G> IN DOCK_SPKR
16V +80% -20% 0.47UF 2 1 1608 C550
1/16W 5% 15K 2 1 1005 R488
10V 10% 1UF 2 1 1608 C714
45.2B> IN MODEM_BEEP
16V +80% -20% 0.47UF 2 1 1608 C555 NO_ASM
1/16W 5% 15K 2 1 1005 R687 NO_ASM
10K 5% 1/16W 1005 R124
10K 5% 1/16W 1005 R125
1UF 10V 10% 1608 C111
1UF 10V 10% 1608 C117
AN12942B
AN12942A(2/2)
U22
1 56 VCC_SP VCC_SP
34 BEEP_IN
8 AGC_LV
49 DETECT_ON
10 AGC_CAP
12 DAMP_OUT
11 DETECT_IN
13 OFFSET_HPR
14 OFFSET_HPL
6 51 GND_SP GND_SP
2 3 SP_OUT_R+
4 5 SP_OUT_R-
55 54 SP_OUT_L+
53 52 SP_OUT_L-
43 VREF_SP
7 DETECT_CAP
46 OFFSET_SPR
47 OFFSET_SPL
SP_OUTR+ OUT 36.7E<
SP_OUTR- OUT 36.7E<
SP_OUTL+ OUT 36.6E<
SP_OUTL- OUT 36.6E<
C23 10V 10% 0.47UF 1608
5% 82K 1/16W 1005 R881
100K 5% 1/16W 1005 R111
1UF 10V 10% 1608 C570
0.47UF 10V 10% 1608 C31
0.47UF 10V 10% 1608 C370
0.47UF 10V 10% 1608 C428
470PF 50V 10% 1005 C65
0.47UF 10V 10% 1608 C488
0.47UF 10V 10% 1608 C22
0.47UF 10V 10% 1608 C119
10UF 10V 20% 3216 TAN C50

DESIGNER	Y.I	11/21/03
CHECKED	Y.Y	11/21/03
APPROVED	K.T	11/21/03
CLASS	K.T	11/21/03

PART NO. 13R1088

IBM

TITLE ROME-1 RWK(V099)

AUDIO HDP AMP AN12942A

IBM CONFIDENTIAL

	DATE	EC NO.
REL	11/21/03	J45843A

PART NO. 13R1088

DEVELOPMENT NO.	Q/M
	39 /82

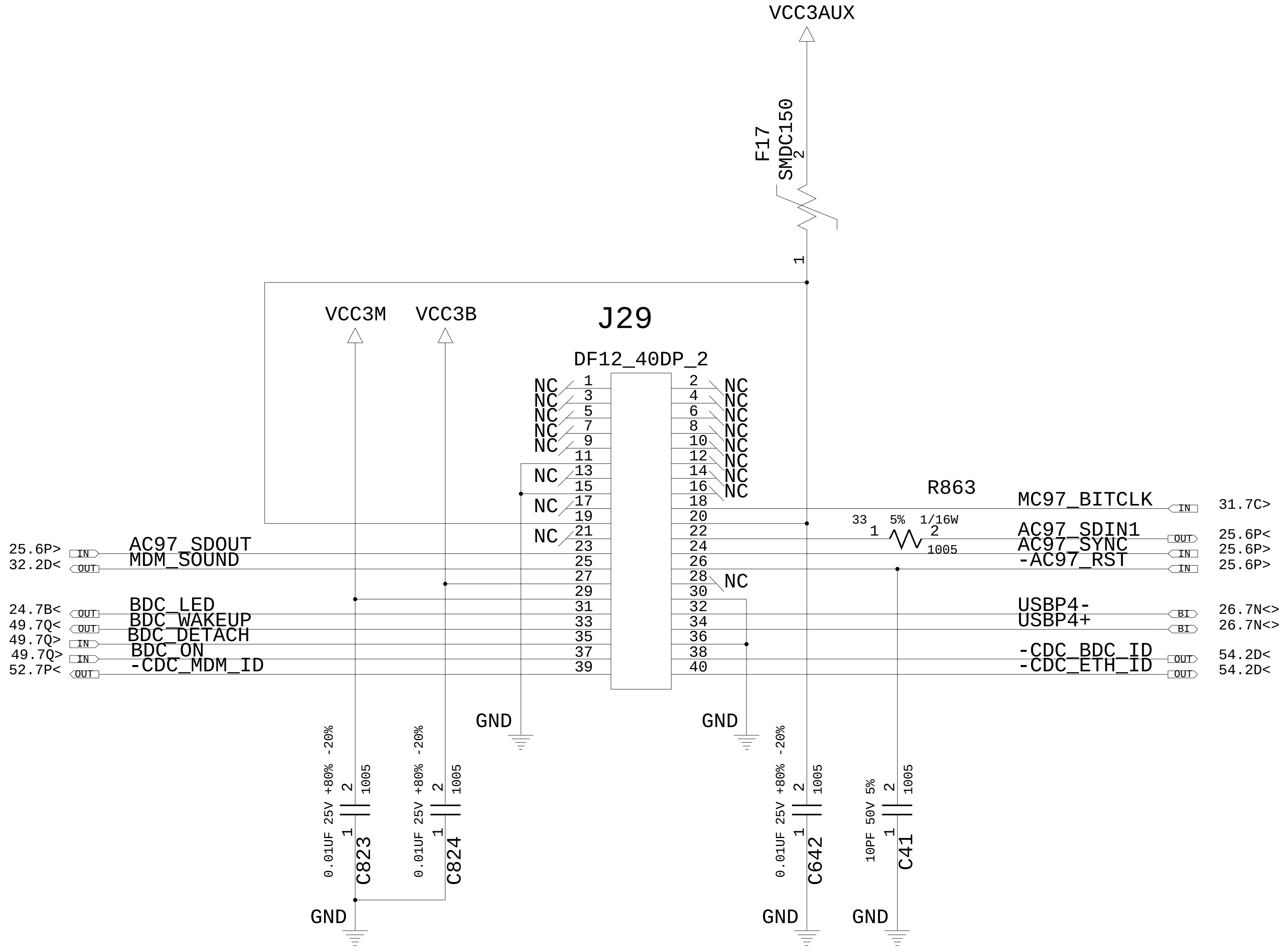
VCC3AUX
F17
SMDC150
2
1
J29
DF12_40DP_2
VCC3M
VCC3B
NC 1 2 NC
NC 3 4 NC
NC 5 6 NC
NC 7 8 NC
NC 9 10 NC
11 12 NC
NC 13 14 NC
15 16 NC
NC 17 18
19 20
NC 21 22
23 24
25 26
27 28 NC
29 30
31 32
33 34
35 36
37 38
39 40
R863
33 5% 1/16W
1 2
1005
MC97_BITCLK 31.7C>
AC97_SDIN1 25.6P<
AC97_SYNC 25.6P>
-AC97_RST 25.6P>
USBP4- 26.7N<>
USBP4+ 26.7N<>
-CDC_BDC_ID 54.2D<
-CDC_ETH_ID 54.2D<
25.6P> AC97_SDOUT
32.2D< MDM_SOUND
24.7B< BDC_LED
49.7Q< BDC_WAKEUP
49.7Q> BDC_DETACH
49.7Q> BDC_ON
52.7P< -CDC_MDM_ID
IN
OUT
BI
GND
C823 0.01UF 25V +80% -20% 1005
C824 0.01UF 25V +80% -20% 1005
C642 0.01UF 25V +80% -20% 1005
C41 10PF 50V 5% 1005

13R1088

DESIGNER	Y.I	11/21/03
CHECKED	Y.Y	11/21/03
APPROVED	K.T	11/21/03
CLASS	K.T	11/21/03

PART NO. 13R1088

IBM

TITLE ROME-1 RWK(V099)

CDC CONNECTOR

IBM CONFIDENTIAL

	DATE	EC NO.	PART NO.
REL	11/21/03	J45843A	13R1088
			DEVELOPMENT NO.
			Q/M 40 /82

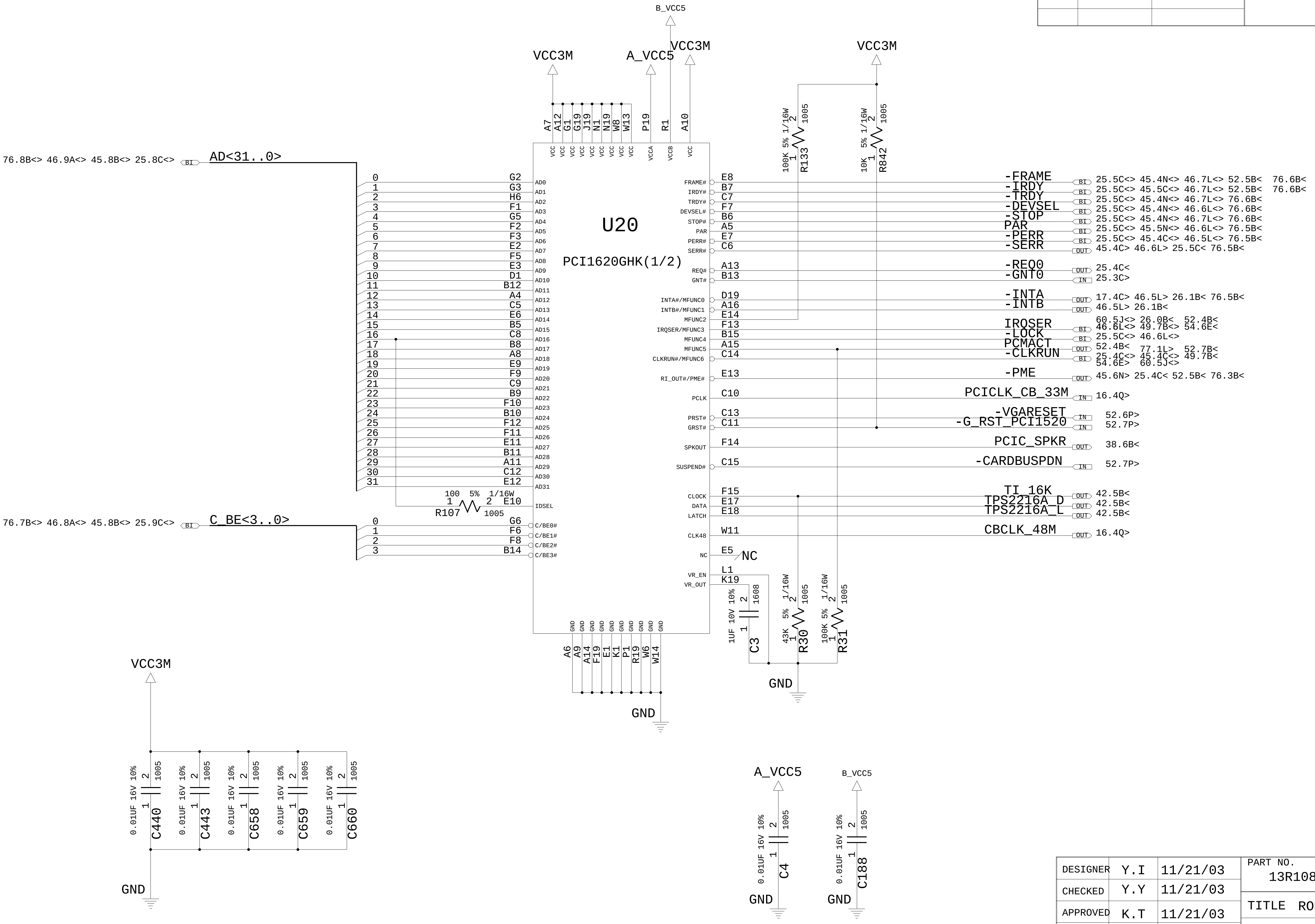

B_VCC5
VCC3M
A_VCC5
VCC3M
VCC3M
A7 A12 G1 G19 J19 N1 N19 W8 W13 P19 R1 A10
U20
PCI1620GHK(1/2)
76.8B<> 46.9A<> 45.8B<> 25.8C<> BI AD<31..0>
0 G2 AD0
1 G3 AD1
2 H6 AD2
3 F1 AD3
4 G5 AD4
5 F2 AD5
6 F3 AD6
7 E2 AD7
8 F5 AD8
9 E3 AD9
10 D1 AD10
11 B12 AD11
12 A4 AD12
13 C5 AD13
14 E6 AD14
15 B5 AD15
16 C8 AD16
17 B8 AD17
18 A8 AD18
19 E9 AD19
20 F9 AD20
21 C9 AD21
22 B9 AD22
23 F10 AD23
24 B10 AD24
25 F12 AD25
26 F11 AD26
27 E11 AD27
28 B11 AD28
29 A11 AD29
30 C12 AD30
31 E12 AD31
100 5% 1/16W 1 R107 2 1005 E10 IDSEL
76.7B<> 46.8A<> 45.8B<> 25.9C<> BI C_BE<3..0>
0 G6 C/BE0#
1 F6 C/BE1#
2 F8 C/BE2#
3 B14 C/BE3#
100K 5% 1/16W 1 2 1005 R133
10K 5% 1/16W 1 2 1005 R842
FRAME# E8 -FRAME BI 25.5C<> 45.4N<> 46.7L<> 52.5B< 76.6B<
IRDY# B7 -IRDY BI 25.5C<> 45.5C<> 46.7L<> 52.5B< 76.6B<
TRDY# C7 -TRDY BI 25.5C<> 45.4N<> 46.7L<> 76.6B<
DEVSEL# F7 -DEVSEL BI 25.5C<> 45.4N<> 46.6L<> 76.6B<
STOP# B6 -STOP BI 25.5C<> 45.4N<> 46.7L<> 76.6B<
PAR A5 PAR BI 25.5C<> 45.5N<> 46.6L<> 76.5B<
PERR# E7 -PERR BI 25.5C<> 45.4C<> 46.5L<> 76.5B<
SERR# C6 -SERR OUT 45.4C> 46.6L> 25.5C< 76.5B<
REQ# A13 -REQ0 OUT 25.4C<
GNT# B13 -GNT0 IN 25.3C>
INTA#/MFUNC0 D19 -INTA OUT 17.4C> 46.5L> 26.1B< 76.5B<
INTB#/MFUNC1 A16 -INTB OUT 46.5L> 26.1B<
MFUNC2 E14
IRQSER/MFUNC3 F13 IRQSER BI 60.5J<> 26.0B< 52.4B< 46.6L<> 49.7B<> 54.6E<
MFUNC4 B15 -LOCK BI 25.5C<> 46.6L<>
MFUNC5 A15 PCMACT OUT 52.4B< 77.1L> 52.7B<
CLKRUN#/MFUNC6 C14 -CLKRUN BI 25.4C<> 45.4C<> 49.7B< 54.6E> 60.5J<>
RI_OUT#/PME# E13 -PME OUT 45.6N> 25.4C< 52.5B< 76.3B<
PCLK C10 PCICLK_CB_33M IN 16.4Q>
PRST# C13 -VGARESET IN 52.6P>
GRST# C11 -G_RST_PCI1520 IN 52.7P>
SPKOUT F14 PCIC_SPKR OUT 38.6B<
SUSPEND# C15 -CARDBUSPDN IN 52.7P>
CLOCK F15 TI_16K OUT 42.5B<
DATA E17 TPS2216A_D OUT 42.5B<
LATCH E18 TPS2216A_L OUT 42.5B<
CLK48 W11 CBCLK_48M OUT 16.4Q>
NC E5 NC
VR_EN L1
VR_OUT K19
1UF 10V 10% 1 2 1608 C3
43K 5% 1/16W 1 2 1005 R30
100K 5% 1/16W 1 2 1005 R31
GND
A6 A9 A14 F19 E1 K1 P1 R19 W6 W14
GND
VCC3M
0.01UF 16V 10% 1 2 1005 C440
0.01UF 16V 10% 1 2 1005 C443
0.01UF 16V 10% 1 2 1005 C658
0.01UF 16V 10% 1 2 1005 C659
0.01UF 16V 10% 1 2 1005 C660
GND
A_VCC5
0.01UF 16V 10% 1 2 1005 C4
GND
B_VCC5
0.01UF 16V 10% 1 2 1005 C188
GND

DESIGNER	Y.I	11/21/03	PART NO. 13R1088 IBM
CHECKED	Y.Y	11/21/03	TITLE ROME-1 RWK(V099)
APPROVED	K.T	11/21/03	
CLASS	K.T	11/21/03	CARD BUS PCI1520 (1/2)

IBM CONFIDENTIAL

	DATE	EC NO.
REL	11/21/03	J45843A

PART NO. 13R1088

DEVELOPMENT NO.

Q/M 41 /82

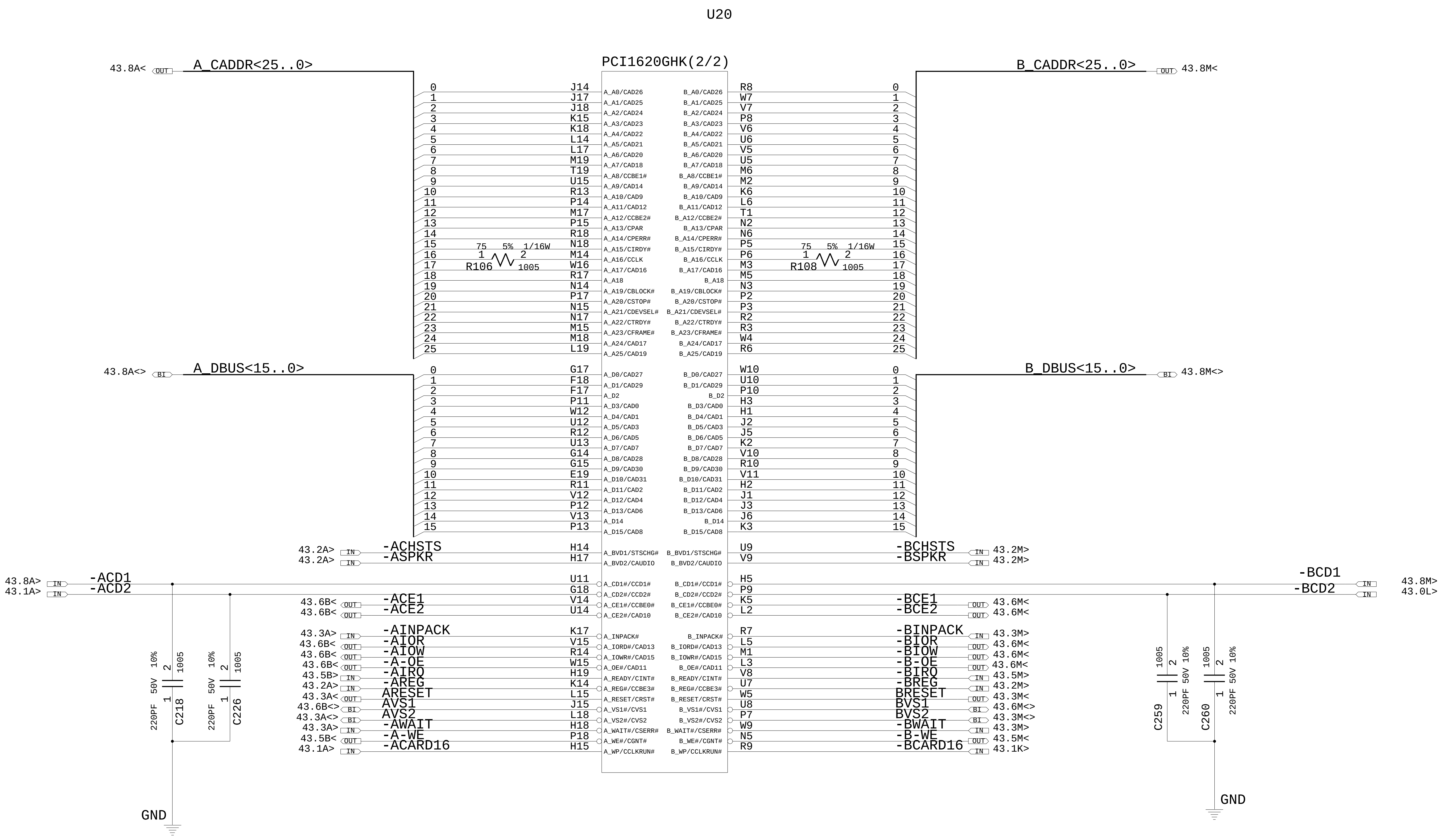
U20
PCI1620GHK(2/2)
43.8A< OUT A_CADDR<25..0>
B_CADDR<25..0> OUT 43.8M<
0 J14 A_A0/CAD26 | B_A0/CAD26 R8 0
1 J17 A_A1/CAD25 | B_A1/CAD25 W7 1
2 J18 A_A2/CAD24 | B_A2/CAD24 V7 2
3 K15 A_A3/CAD23 | B_A3/CAD23 P8 3
4 K18 A_A4/CAD22 | B_A4/CAD22 V6 4
5 L14 A_A5/CAD21 | B_A5/CAD21 U6 5
6 L17 A_A6/CAD20 | B_A6/CAD20 V5 6
7 M19 A_A7/CAD18 | B_A7/CAD18 U5 7
8 T19 A_A8/CCBE1# | B_A8/CCBE1# M6 8
9 U15 A_A9/CAD14 | B_A9/CAD14 M2 9
10 R13 A_A10/CAD9 | B_A10/CAD9 K6 10
11 P14 A_A11/CAD12 | B_A11/CAD12 L6 11
12 M17 A_A12/CCBE2# | B_A12/CCBE2# T1 12
13 P15 A_A13/CPAR | B_A13/CPAR N2 13
14 R18 A_A14/CPERR# | B_A14/CPERR# N6 14
15 N18 A_A15/CIRDY# | B_A15/CIRDY# P5 15
16 M14 A_A16/CCLK | B_A16/CCLK P6 16
17 W16 A_A17/CAD16 | B_A17/CAD16 M3 17
18 R17 A_A18 | B_A18 M5 18
19 N14 A_A19/CBLOCK# | B_A19/CBLOCK# N3 19
20 P17 A_A20/CSTOP# | B_A20/CSTOP# P2 20
21 N15 A_A21/CDEVSEL# | B_A21/CDEVSEL# P3 21
22 N17 A_A22/CTRDY# | B_A22/CTRDY# R2 22
23 M15 A_A23/CFRAME# | B_A23/CFRAME# R3 23
24 M18 A_A24/CAD17 | B_A24/CAD17 W4 24
25 L19 A_A25/CAD19 | B_A25/CAD19 R6 25
75 5% 1/16W
1 2
R106 1005
75 5% 1/16W
1 2
R108 1005
43.8A<> BI A_DBUS<15..0>
B_DBUS<15..0> BI 43.8M<>
0 G17 A_D0/CAD27 | B_D0/CAD27 W10 0
1 F18 A_D1/CAD29 | B_D1/CAD29 U10 1
2 F17 A_D2 | B_D2 P10 2
3 P11 A_D3/CAD0 | B_D3/CAD0 H3 3
4 W12 A_D4/CAD1 | B_D4/CAD1 H1 4
5 U12 A_D5/CAD3 | B_D5/CAD3 J2 5
6 R12 A_D6/CAD5 | B_D6/CAD5 J5 6
7 U13 A_D7/CAD7 | B_D7/CAD7 K2 7
8 G14 A_D8/CAD28 | B_D8/CAD28 V10 8
9 G15 A_D9/CAD30 | B_D9/CAD30 R10 9
10 E19 A_D10/CAD31 | B_D10/CAD31 V11 10
11 R11 A_D11/CAD2 | B_D11/CAD2 H2 11
12 V12 A_D12/CAD4 | B_D12/CAD4 J1 12
13 P12 A_D13/CAD6 | B_D13/CAD6 J3 13
14 V13 A_D14 | B_D14 J6 14
15 P13 A_D15/CAD8 | B_D15/CAD8 K3 15
43.2A> IN -ACHSTS H14 A_BVD1/STSCHG# | B_BVD1/STSCHG# U9 -BCHSTS IN 43.2M>
43.2A> IN -ASPKR H17 A_BVD2/CAUDIO | B_BVD2/CAUDIO V9 -BSPKR IN 43.2M>
43.8A> IN -ACD1 U11 A_CD1#/CCD1# | B_CD1#/CCD1# H5 -BCD1 IN 43.8M>
43.1A> IN -ACD2 G18 A_CD2#/CCD2# | B_CD2#/CCD2# P9 -BCD2 IN 43.0L>
43.6B< OUT -ACE1 V14 A_CE1#/CCBE0# | B_CE1#/CCBE0# K5 -BCE1 OUT 43.6M<
43.6B< OUT -ACE2 U14 A_CE2#/CAD10 | B_CE2#/CAD10 L2 -BCE2 OUT 43.6M<
43.3A> IN -AINPACK K17 A_INPACK# | B_INPACK# R7 -BINPACK IN 43.3M>
43.6B< OUT -AIOR V15 A_IORD#/CAD13 | B_IORD#/CAD13 L5 -BIOR OUT 43.6M<
43.6B< OUT -AIOW R14 A_IOWR#/CAD15 | B_IOWR#/CAD15 M1 -BIOW OUT 43.6M<
43.6B< OUT -A-OE W15 A_OE#/CAD11 | B_OE#/CAD11 L3 -B-OE OUT 43.6M<
43.5B> IN -AIRQ H19 A_READY/CINT# | B_READY/CINT# V8 -BIRQ IN 43.5M>
43.2A> IN -AREG K14 A_REG#/CCBE3# | B_REG#/CCBE3# U7 -BREG IN 43.2M>
43.3A< OUT ARESET L15 A_RESET/CRST# | B_RESET/CRST# W5 BRESET OUT 43.3M<
43.6B<> BI AVS1 J15 A_VS1#/CVS1 | B_VS1#/CVS1 U8 BVS1 BI 43.6M<>
43.3A<> BI AVS2 L18 A_VS2#/CVS2 | B_VS2#/CVS2 P7 BVS2 BI 43.3M<>
43.3A> IN -AWAIT H18 A_WAIT#/CSERR# | B_WAIT#/CSERR# W9 -BWAIT IN 43.3M>
43.5B< OUT -A-WE P18 A_WE#/CGNT# | B_WE#/CGNT# N5 -B-WE OUT 43.5M<
43.1A> IN -ACARD16 H15 A_WP/CCLKRUN# | B_WP/CCLKRUN# R9 -BCARD16 IN 43.1K>
220PF 50V 10% 1 2 1005 C218
220PF 50V 10% 1 2 1005 C226
GND
1005 2 1 220PF 50V 10% C259
1005 2 1 220PF 50V 10% C260
GND

DESIGNER	Y.I	11/21/03	PART NO. 13R1088	IBM
CHECKED	Y.Y	11/21/03	TITLE ROME-1 RWK(V099)	
APPROVED	K.T	11/21/03		
CLASS	K.T	11/21/03	CARD BUS PCI1520 (2/2)	

IBM CONFIDENTIAL

	DATE	EC NO.
REL	11/21/03	J45843A

PART NO. 13R1088

DEVELOPMENT NO.

Q/M 42 /82

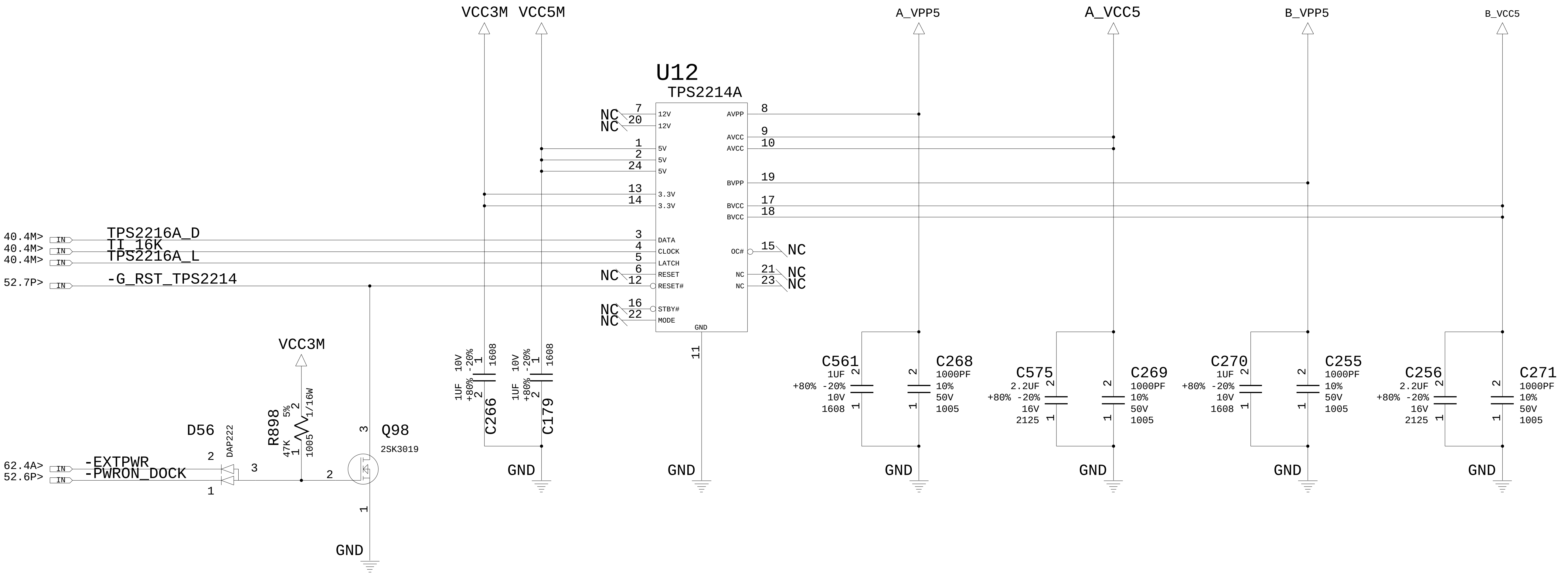
VCC3M
VCC5M
A_VPP5
A_VCC5
B_VPP5
B_VCC5
U12
TPS2214A
NC 7 12V
NC 20 12V
1 5V
2 5V
24 5V
13 3.3V
14 3.3V
3 DATA
4 CLOCK
5 LATCH
NC 6 RESET
12 RESET#
NC 16 STBY#
NC 22 MODE
GND 11
AVPP 8
AVCC 9
AVCC 10
BVPP 19
BVCC 17
BVCC 18
OC# 15 NC
NC 21 NC
NC 23 NC
40.4M> IN TPS2216A_D
40.4M> IN TI_16K
40.4M> IN TPS2216A_L
52.7P> IN -G_RST_TPS2214
62.4A> IN -EXTPWR
52.6P> IN -PWRON_DOCK
D56 DAP222
R898 47K 5% 1/16W 1005
Q98 2SK3019
C266 1UF 10V +80% -20% 1608
C179 1UF 10V +80% -20% 1608
C561 1UF +80% -20% 10V 1608
C268 1000PF 10% 50V 1005
C575 2.2UF +80% -20% 16V 2125
C269 1000PF 10% 50V 1005
C270 1UF +80% -20% 10V 1608
C255 1000PF 10% 50V 1005
C256 2.2UF +80% -20% 16V 2125
C271 1000PF 10% 50V 1005
GND

13R1088

DESIGNER	Y.I	11/21/03
CHECKED	Y.Y	11/21/03
APPROVED	K.T	11/21/03
CLASS	K.T	11/21/03

PART NO. 13R1088

IBM

TITLE ROME-1 RWK(V099)

CARD BUS POWER CONTROL

IBM CONFIDENTIAL

	DATE	EC NO.
REL	11/21/03	J45843A

PART NO. 13R1088

DEVELOPMENT NO.

Q/M 43 /82

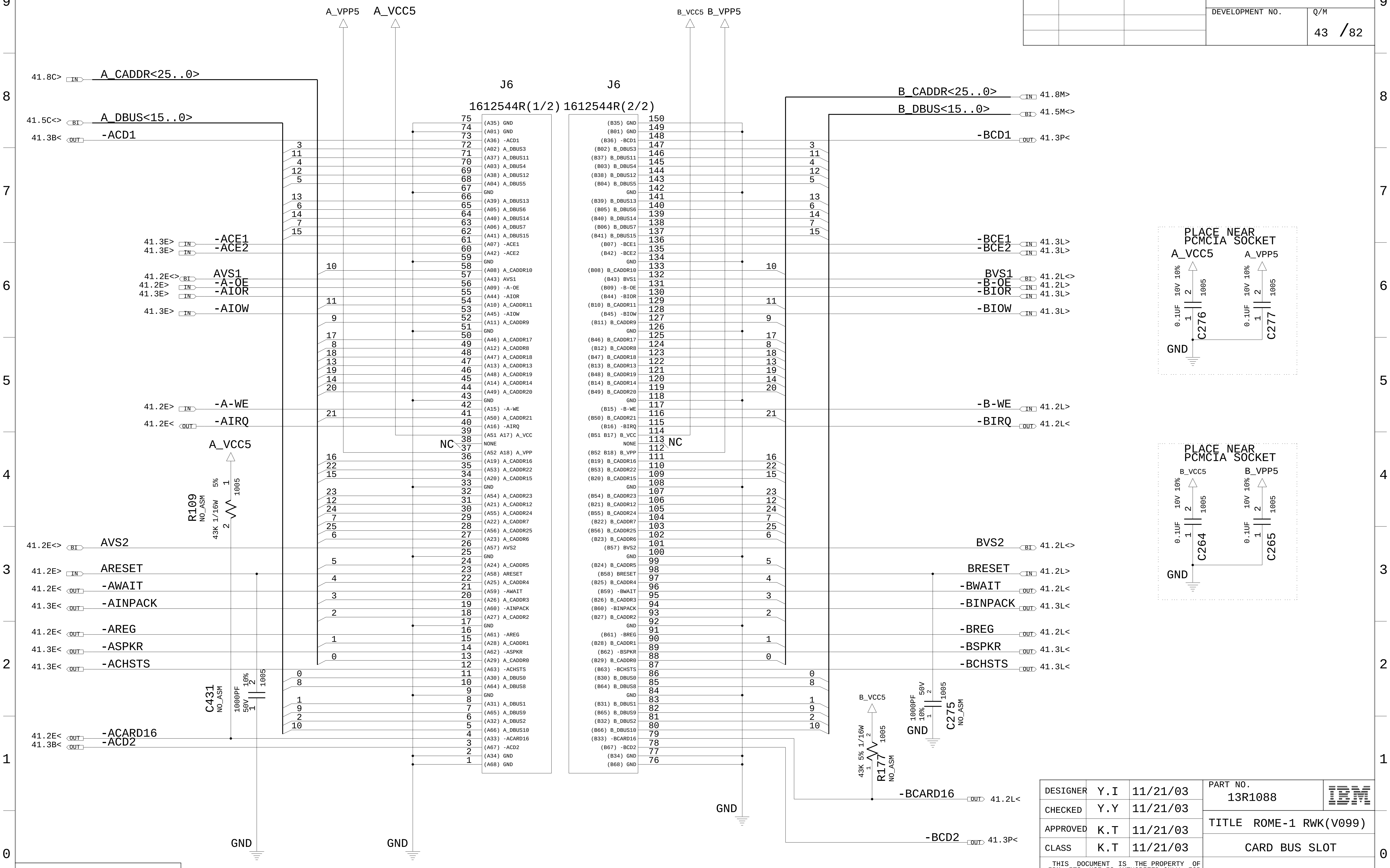

J6
1612544R(1/2)
J6
1612544R(2/2)
A_VPP5
A_VCC5
B_VCC5
B_VPP5
41.8C> IN A_CADDR<25..0>
41.5C<> BI A_DBUS<15..0>
41.3B< OUT -ACD1
41.3E> IN -ACE1
41.3E> IN -ACE2
41.2E<> BI AVS1
41.2E> IN -A-OE
41.3E> IN -AIOR
41.3E> IN -AIOW
41.2E> IN -A-WE
41.2E< OUT -AIRQ
41.2E<> BI AVS2
41.2E> IN ARESET
41.2E< OUT -AWAIT
41.3E< OUT -AINPACK
41.2E< OUT -AREG
41.3E< OUT -ASPKR
41.3E< OUT -ACHSTS
41.2E< OUT -ACARD16
41.3B< OUT -ACD2
B_CADDR<25..0> IN 41.8M>
B_DBUS<15..0> BI 41.5M<>
-BCD1 OUT 41.3P<
-BCE1 IN 41.3L>
-BCE2 IN 41.3L>
BVS1 BI 41.2L<>
-B-OE IN 41.2L>
-BIOR IN 41.3L>
-BIOW IN 41.3L>
-B-WE IN 41.2L>
-BIRQ OUT 41.2L<
BVS2 BI 41.2L<>
BRESET IN 41.2L>
-BWAIT OUT 41.2L<
-BINPACK OUT 41.3L<
-BREG OUT 41.2L<
-BSPKR OUT 41.3L<
-BCHSTS OUT 41.3L<
-BCARD16 OUT 41.2L<
-BCD2 OUT 41.3P<
NC
NC
R109 NO_ASM 43K 1/16W 5% 1005
C431 NO_ASM 1000PF 50V 10% 1005
R177 NO_ASM 43K 5% 1/16W 1005
C275 NO_ASM 1000PF 50V 10% 1005
PLACE NEAR PCMCIA SOCKET
C276 0.1UF 10V 10% 1005
C277 0.1UF 10V 10% 1005
PLACE NEAR PCMCIA SOCKET
C264 0.1UF 10V 10% 1005
C265 0.1UF 10V 10% 1005
GND
(A35) GND, (A01) GND, (A36) -ACD1, (A02) A_DBUS3, (A37) A_DBUS11, (A03) A_DBUS4, (A38) A_DBUS12, (A04) A_DBUS5, GND, (A39) A_DBUS13, (A05) A_DBUS6, (A40) A_DBUS14, (A06) A_DBUS7, (A41) A_DBUS15, (A07) -ACE1, (A42) -ACE2, GND, (A08) A_CADDR10, (A43) AVS1, (A09) -A-OE, (A44) -AIOR, (A10) A_CADDR11, (A45) -AIOW, (A11) A_CADDR9, GND, (A46) A_CADDR17, (A12) A_CADDR8, (A47) A_CADDR18, (A13) A_CADDR13, (A48) A_CADDR19, (A14) A_CADDR14, (A49) A_CADDR20, GND, (A15) -A-WE, (A50) A_CADDR21, (A16) -AIRQ, (A51 A17) A_VCC, NONE, (A52 A18) A_VPP, (A19) A_CADDR16, (A53) A_CADDR22, (A20) A_CADDR15, GND, (A54) A_CADDR23, (A21) A_CADDR12, (A55) A_CADDR24, (A22) A_CADDR7, (A56) A_CADDR25, (A23) A_CADDR6, (A57) AVS2, GND, (A24) A_CADDR5, (A58) ARESET, (A25) A_CADDR4, (A59) -AWAIT, (A26) A_CADDR3, (A60) -AINPACK, (A27) A_CADDR2, GND, (A61) -AREG, (A28) A_CADDR1, (A62) -ASPKR, (A29) A_CADDR0, (A63) -ACHSTS, (A30) A_DBUS0, (A64) A_DBUS8, GND, (A31) A_DBUS1, (A65) A_DBUS9, (A32) A_DBUS2, (A66) A_DBUS10, (A33) -ACARD16, (A67) -ACD2, (A34) GND, (A68) GND
(B35) GND, (B01) GND, (B36) -BCD1, (B02) B_DBUS3, (B37) B_DBUS11, (B03) B_DBUS4, (B38) B_DBUS12, (B04) B_DBUS5, GND, (B39) B_DBUS13, (B05) B_DBUS6, (B40) B_DBUS14, (B06) B_DBUS7, (B41) B_DBUS15, (B07) -BCE1, (B42) -BCE2, GND, (B08) B_CADDR10, (B43) BVS1, (B09) -B-OE, (B44) -BIOR, (B10) B_CADDR11, (B45) -BIOW, (B11) B_CADDR9, GND, (B46) B_CADDR17, (B12) B_CADDR8, (B47) B_CADDR18, (B13) B_CADDR13, (B48) B_CADDR19, (B14) B_CADDR14, (B49) B_CADDR20, GND, (B15) -B-WE, (B50) B_CADDR21, (B16) -BIRQ, (B51 B17) B_VCC, NONE, (B52 B18) B_VPP, (B19) B_CADDR16, (B53) B_CADDR22, (B20) B_CADDR15, GND, (B54) B_CADDR23, (B21) B_CADDR12, (B55) B_CADDR24, (B22) B_CADDR7, (B56) B_CADDR25, (B23) B_CADDR6, (B57) BVS2, GND, (B24) B_CADDR5, (B58) BRESET, (B25) B_CADDR4, (B59) -BWAIT, (B26) B_CADDR3, (B60) -BINPACK, (B27) B_CADDR2, GND, (B61) -BREG, (B28) B_CADDR1, (B62) -BSPKR, (B29) B_CADDR0, (B63) -BCHSTS, (B30) B_DBUS0, (B64) B_DBUS8, GND, (B31) B_DBUS1, (B65) B_DBUS9, (B32) B_DBUS2, (B66) B_DBUS10, (B33) -BCARD16, (B67) -BCD2, (B34) GND, (B68) GND

13R1088

DESIGNER	Y.I	11/21/03
CHECKED	Y.Y	11/21/03
APPROVED	K.T	11/21/03
CLASS	K.T	11/21/03

PART NO. 13R1088

IBM

TITLE ROME-1 RWK(V099)

CARD BUS SLOT

THIS DOCUMENT IS THE PROPERTY OF IBM. ITS USE IS AUTHORIZED ONLY FOR RESPONDING TO A REQUEST FOR QUOTATION OR FOR THE PERFORMANCE OF WORK FOR IBM. ALL QUESTIONS MUST BE REFERRED TO THE IBM PURCHASING DEPARTMENT.

IBM CONFIDENTIAL

	DATE	EC NO.	PART NO. 13R1088
REL	11/21/03	J45843A	DEVELOPMENT NO. Q/M 44 /82

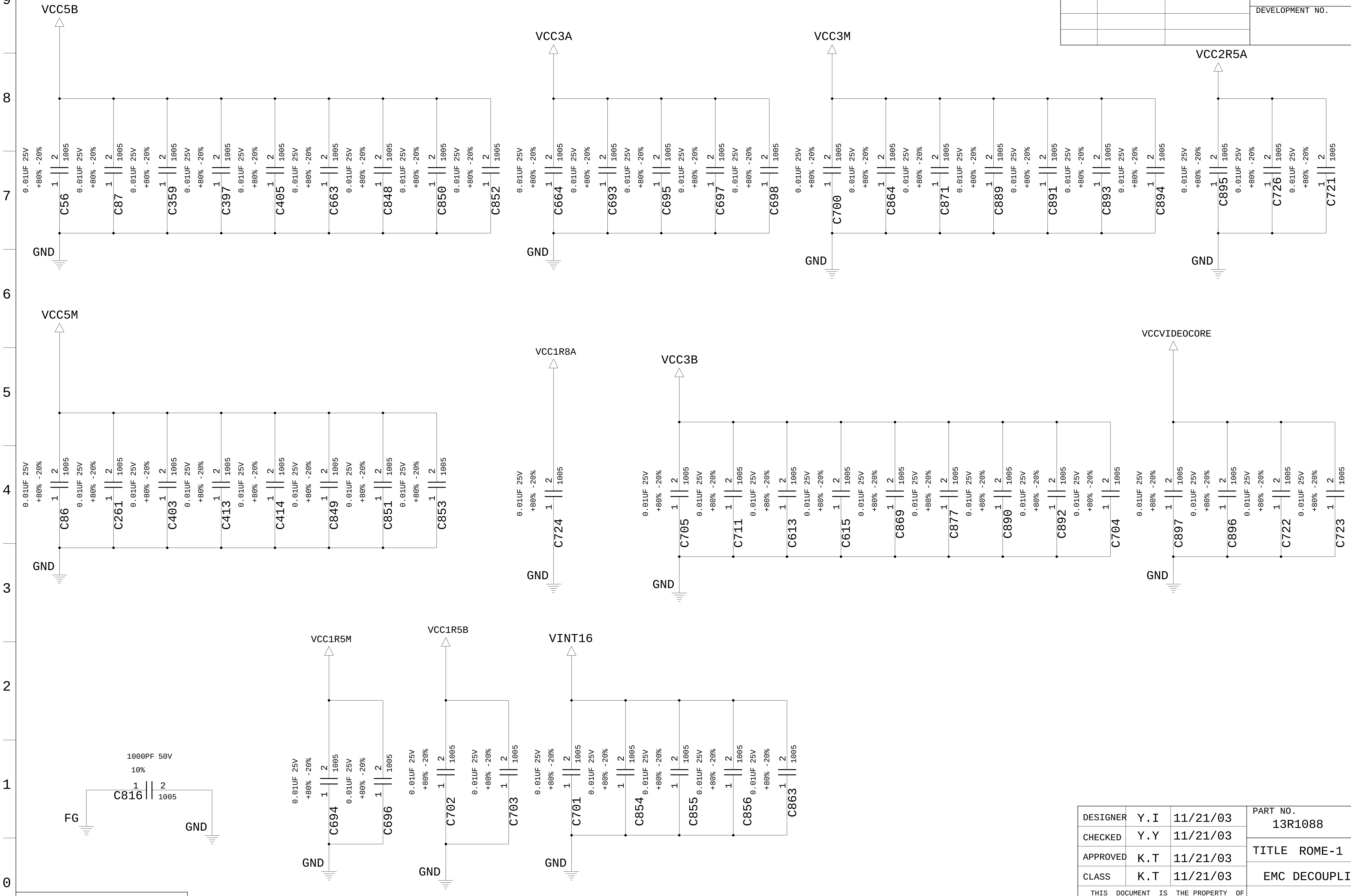
VCC5B
C56
C87
C359
C397
C405
C663
C848
C850
C852
VCC3A
C664
C693
C695
C697
C698
VCC3M
C700
C864
C871
C889
C891
C893
C894
VCC2R5A
C895
C726
C721
0.01UF 25V
+80% -20%
1005
1
2
GND
VCC5M
C86
C261
C403
C413
C414
C849
C851
C853
VCC1R8A
C724
VCC3B
C705
C711
C613
C615
C869
C877
C890
C892
C704
VCCVIDEOCORE
C897
C896
C722
C723
VCC1R5M
C694
C696
VCC1R5B
C702
C703
VINT16
C701
C854
C855
C856
C863
1000PF 50V
10%
C816
FG

13R1088

DESIGNER	Y.I	11/21/03	PART NO. 13R1088
CHECKED	Y.Y	11/21/03	TITLE ROME-1 RWK(V099)
APPROVED	K.T	11/21/03	
CLASS	K.T	11/21/03	EMC DECOUPLING

THIS DOCUMENT IS THE PROPERTY OF IBM ITS USE IS AUTHORIZED ONLY FOR RESPONDING TO A REQUEST FOR QUOTATION OR FOR THE PERFORMANCE OF WORK FOR IBM. ALL QUESTIONS MUST BE REFERRED TO THE IBM PURCHASING DEPARTMENT.

IBM CONFIDENTIAL

REL	DATE 11/21/03	EC NO. J45843A	PART NO. 13R1088
			DEVELOPMENT NO.
			Q/M 45 /82

MINI PCI

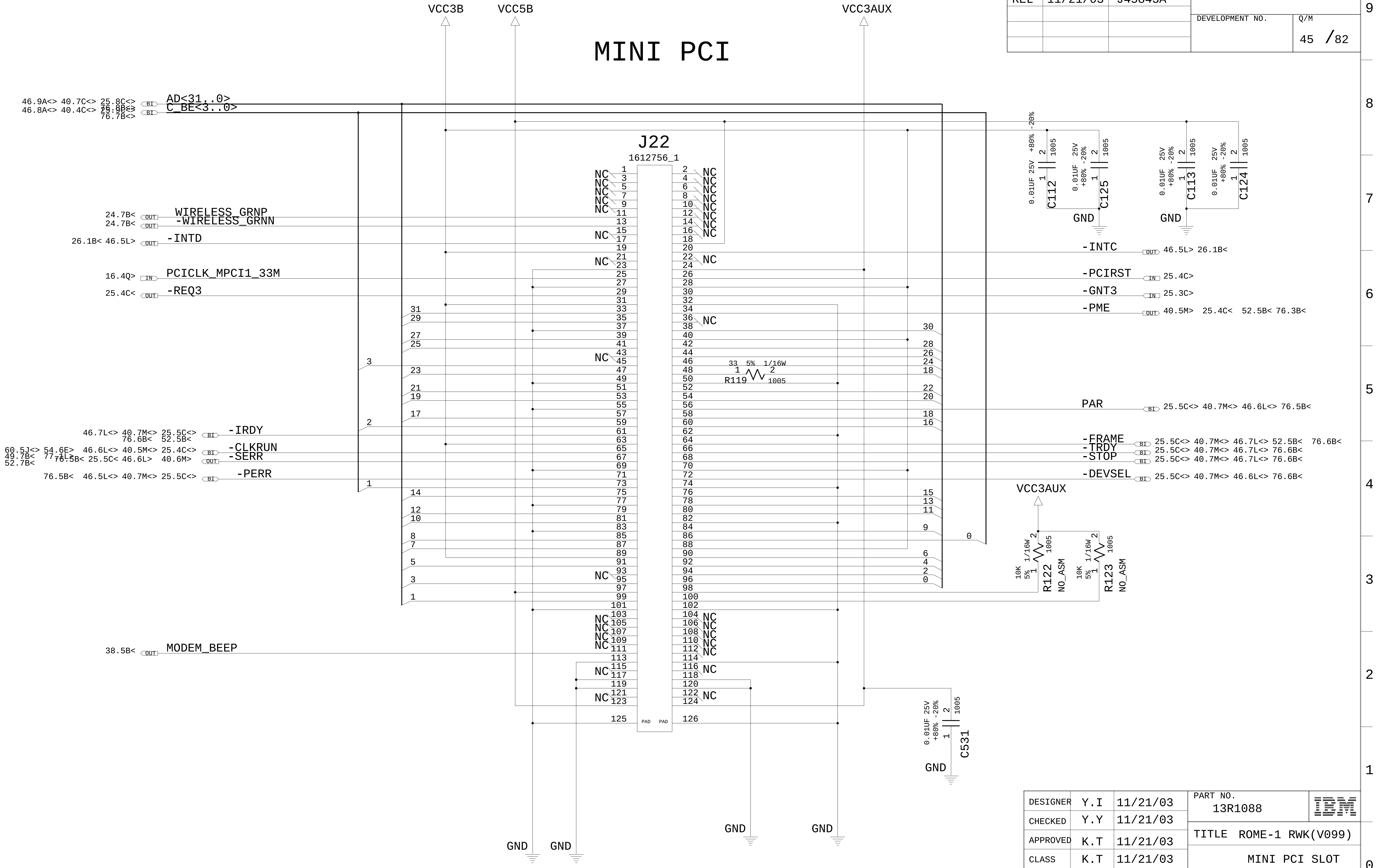
VCC3B
VCC5B
VCC3AUX
46.9A<> 40.7C<> 25.8C<> 76.8B<> AD<31..0>
46.8A<> 40.4C<> 25.9B<> 76.7B<> C_BE<3..0>
J22
1612756_1
24.7B< WIRELESS_GRNP
24.7B< -WIRELESS_GRNN
26.1B< 46.5L> -INTD
16.4Q> PCICLK_MPCI1_33M
25.4C< -REQ3
46.7L<> 40.7M<> 25.5C<> 76.6B< 52.5B< -IRDY
60.5J<> 54.6E> 46.6L<> 40.5M<> 25.4C<> 49.7B< 77.1L> 52.7B< -CLKRUN
76.5B< 25.5C< 46.6L> 40.6M> -SERR
76.5B< 46.5L<> 40.7M<> 25.5C<> -PERR
38.5B< MODEM_BEEP
-INTC 46.5L> 26.1B<
-PCIRST 25.4C>
-GNT3 25.3C>
-PME 40.5M> 25.4C< 52.5B< 76.3B<
PAR 25.5C<> 40.7M<> 46.6L<> 76.5B<
-FRAME 25.5C<> 40.7M<> 46.7L<> 52.5B< 76.6B<
-TRDY 25.5C<> 40.7M<> 46.7L<> 76.6B<
-STOP 25.5C<> 40.7M<> 46.7L<> 76.6B<
-DEVSEL 25.5C<> 40.7M<> 46.6L<> 76.6B<
NC
R119 33 5% 1/16W 1005
C112 0.01UF 25V +80% -20% 1005
C125 0.01UF 25V +80% -20% 1005
C113 0.01UF 25V +80% -20% 1005
C124 0.01UF 25V +80% -20% 1005
C531 0.01UF 25V +80% -20% 1005
R122 10K 5% 1/16W 1005 NO_ASM
R123 10K 5% 1/16W 1005 NO_ASM
GND
PAD
125
126

DESIGNER	Y.I	11/21/03	PART NO. 13R1088	IBM
CHECKED	Y.Y	11/21/03	TITLE ROME-1 RWK(V099)	
APPROVED	K.T	11/21/03		
CLASS	K.T	11/21/03	MINI PCI SLOT	

IBM CONFIDENTIAL

REL	DATE 11/21/03	EC NO. J45843A

PART NO. 13R1088

DEVELOPMENT NO.

Q/M 46 /82

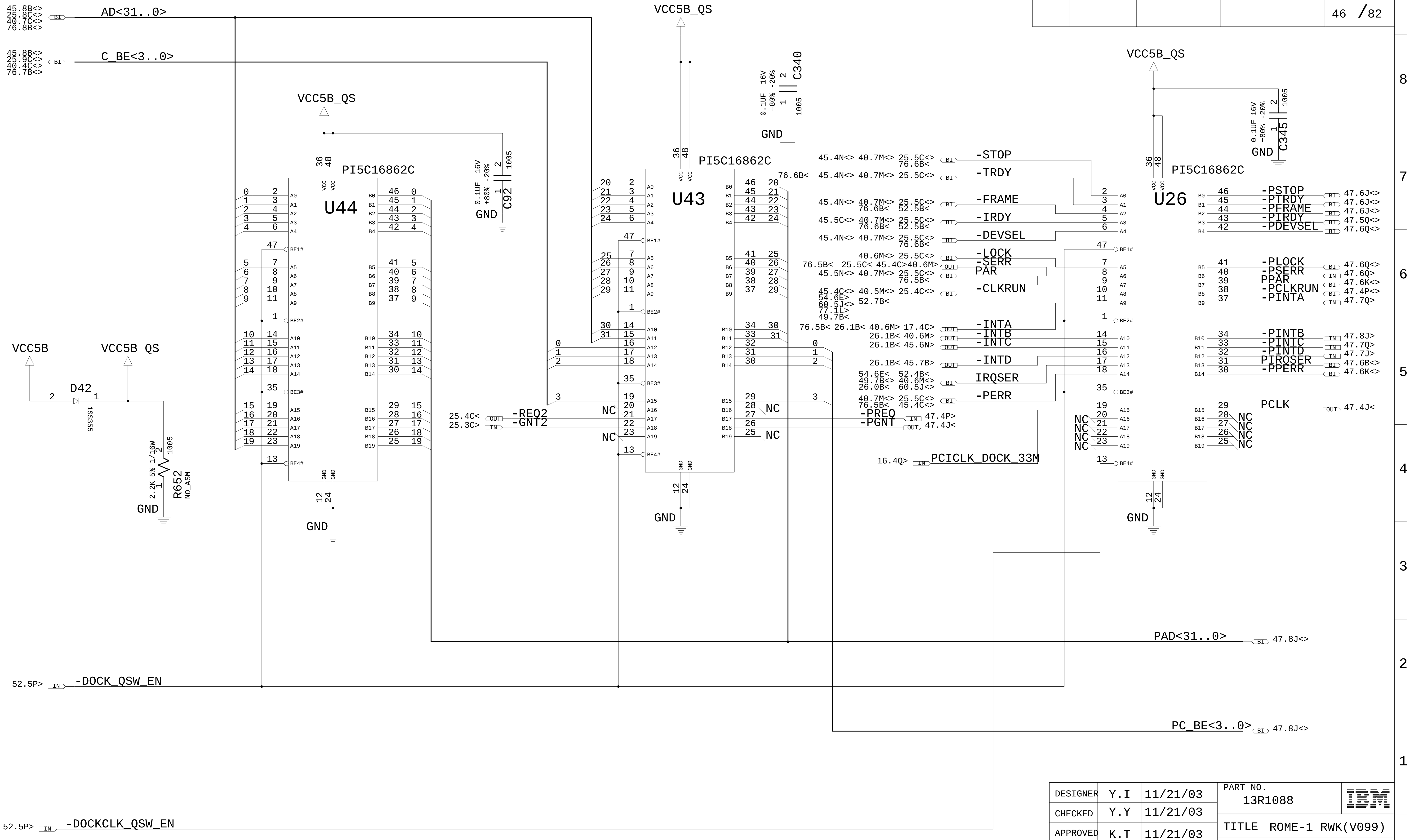

45.8B<> 25.8C<> 40.7C<> 76.8B<> BI AD<31..0>
45.8B<> 25.9C<> 40.4C<> 76.7B<> BI C_BE<3..0>
VCC5B_QS
VCC5B_QS
VCC5B_QS
VCC5B_QS
VCC5B
0.1UF 16V +80% -20% 1005 C92
0.1UF 16V +80% -20% 1005 C340
0.1UF 16V +80% -20% 1005 C345
GND
U44
U43
U26
PI5C16862C
PI5C16862C
PI5C16862C
D42
1SS355
R652
2.2K 5% 1/16W 1005
NO_ASM
45.4N<> 40.7M<> 25.5C<> 76.6B<> BI -STOP
76.6B< 45.4N<> 40.7M<> 25.5C<> BI -TRDY
45.4N<> 40.7M<> 25.5C<> 76.6B< 52.5B< BI -FRAME
45.5C<> 40.7M<> 25.5C<> 76.6B< 52.5B< BI -IRDY
45.4N<> 40.7M<> 25.5C<> 76.6B< BI -DEVSEL
40.6M<> 25.5C<> BI -LOCK
76.5B< 25.5C< 45.4C<> 40.6M> OUT -SERR
45.5N<> 40.7M<> 25.5C<> 76.5B< BI PAR
45.4C<> 40.5M<> 25.4C<> 54.6E> 60.5J<> 52.7B< 77.1L> 49.7B< BI -CLKRUN
76.5B< 26.1B< 40.6M> 17.4C> OUT -INTA
26.1B< 40.6M> OUT -INTB
26.1B< 45.6N> OUT -INTC
26.1B< 45.7B> OUT -INTD
54.6E< 52.4B< 49.7B<> 40.6M<> 26.0B< 60.5J<> BI IRQSER
40.7M<> 25.5C<> 76.5B< 45.4C<> BI -PERR
25.4C< OUT -REQ2
25.3C> IN -GNT2
-PREQ IN 47.4P>
-PGNT OUT 47.4J<
16.4Q> IN PCICLK_DOCK_33M
-PSTOP BI 47.6J<>
-PTRDY BI 47.6J<>
-PFRAME BI 47.6J<>
-PIRDY BI 47.5Q<>
-PDEVSEL BI 47.6Q<>
-PLOCK BI 47.6Q<>
-PSERR IN 47.6Q>
PPAR BI 47.6K<>
-PCLKRUN BI 47.4P<>
-PINTA IN 47.7Q>
-PINTB IN 47.8J>
-PINTC IN 47.7Q>
-PINTD IN 47.7J>
PIRQSER BI 47.6B<>
-PPERR BI 47.6K<>
PCLK OUT 47.4J<
NC
PAD<31..0> BI 47.8J<>
PC_BE<3..0> BI 47.8J<>
52.5P> IN -DOCK_QSW_EN
52.5P> IN -DOCKCLK_QSW_EN

DESIGNER	Y.I	11/21/03
CHECKED	Y.Y	11/21/03
APPROVED	K.T	11/21/03
CLASS	K.T	11/21/03

PART NO. 13R1088

IBM

TITLE ROME-1 RWK(V099)

PCI BUS SWITCH

IBM CONFIDENTIAL

	DATE	EC NO.
REL	11/21/03	J45843A

PART NO. 13R1088

DEVELOPMENT NO.

Q/M 47 /82

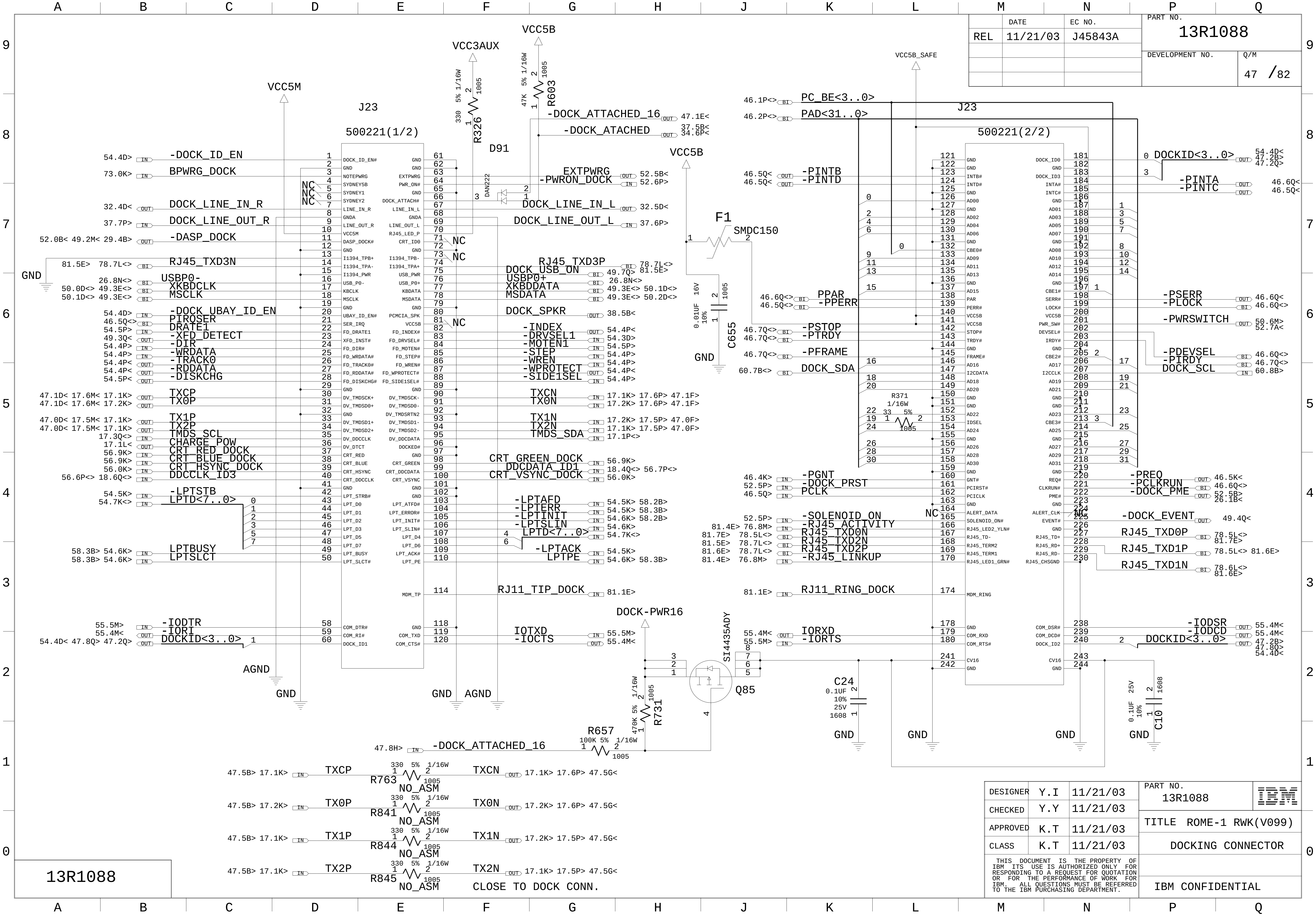

J23
500221(1/2)
500221(2/2)
VCC5M
VCC3AUX
VCC5B
VCC5B_SAFE
DOCK-PWR16
-DOCK_ID_EN
BPWRG_DOCK
DOCK_LINE_IN_R
DOCK_LINE_OUT_R
-DASP_DOCK
RJ45_TXD3N
USBP0-
XKBDCLK
MSCLK
-DOCK_UBAY_ID_EN
PIRQSER
DRATE1
-XFD_DETECT
-DIR
-WRDATA
-TRACK0
-RDDATA
-DISKCHG
TXCP
TX0P
TX1P
TX2P
TMDS_SCL
CHARGE_POW
CRT_RED_DOCK
CRT_BLUE_DOCK
CRT_HSYNC_DOCK
DDCCLK_ID3
-LPTSTB
LPTD<7..0>
LPTBUSY
LPTSLCT
-IODTR
-IORI
DOCKID<3..0>
-DOCK_ATTACHED_16
-DOCK_ATACHED
EXTPWRG
-PWRON_DOCK
DOCK_LINE_IN_L
DOCK_LINE_OUT_L
RJ45_TXD3P
DOCK_USB_ON
USBP0+
XKBDDATA
MSDATA
DOCK_SPKR
-INDEX
-DRVSEL1
-MOTEN1
-STEP
-WREN
-WPROTECT
-SIDE1SEL
TXCN
TX0N
TX1N
TX2N
TMDS_SDA
CRT_GREEN_DOCK
DDCDATA_ID1
CRT_VSYNC_DOCK
-LPTAFD
-LPTERR
-LPTINIT
-LPTSLIN
-LPTACK
LPTPE
RJ11_TIP_DOCK
IOTXD
-IOCTS
R326 330 5% 1/16W 1005
R603 47K 5% 1/16W 1005
D91 DAN222
F1 SMDC150
C655 0.01UF 16V 10% 1005
Q85 SI4435ADY
R731 470K 5% 1/16W 1005
R657 100K 5% 1/16W 1005
R371 33 5% 1/16W 1005
C24 0.1UF 10% 25V 1608
C10 0.1UF 25V 10% 1608
PC_BE<3..0>
PAD<31..0>
-PINTB
-PINTD
PPAR
-PPERR
-PSTOP
-PTRDY
-PFRAME
DOCK_SDA
-PGNT
-DOCK_PRST
PCLK
-SOLENOID_ON
-RJ45_ACTIVITY
RJ45_TXD0N
RJ45_TXD2N
RJ45_TXD2P
-RJ45_LINKUP
RJ11_RING_DOCK
IORXD
-IORTS
DOCKID<3..0>
-PINTA
-PINTC
-PSERR
-PLOCK
-PWRSWITCH
-PDEVSEL
-PIRDY
DOCK_SCL
-PREQ
-PCLKRUN
-DOCK_PME
-DOCK_EVENT
RJ45_TXD0P
RJ45_TXD1P
RJ45_TXD1N
-IODSR
-IODCD
NC
GND
AGND
TXCP
TXCN
R763 330 5% 1/16W 1005 NO_ASM
TX0P
TX0N
R841 330 5% 1/16W 1005 NO_ASM
TX1P
TX1N
R844 330 5% 1/16W 1005 NO_ASM
TX2P
TX2N
R845 330 5% 1/16W 1005 NO_ASM
CLOSE TO DOCK CONN.

DESIGNER	Y.I	11/21/03
CHECKED	Y.Y	11/21/03
APPROVED	K.T	11/21/03
CLASS	K.T	11/21/03

PART NO. 13R1088

IBM

TITLE ROME-1 RWK(V099)

DOCKING CONNECTOR

IBM CONFIDENTIAL

	DATE	EC NO.	PART NO. 13R1088
REL	11/21/03	J45843A	
			DEVELOPMENT NO.
			Q/M 48 /82

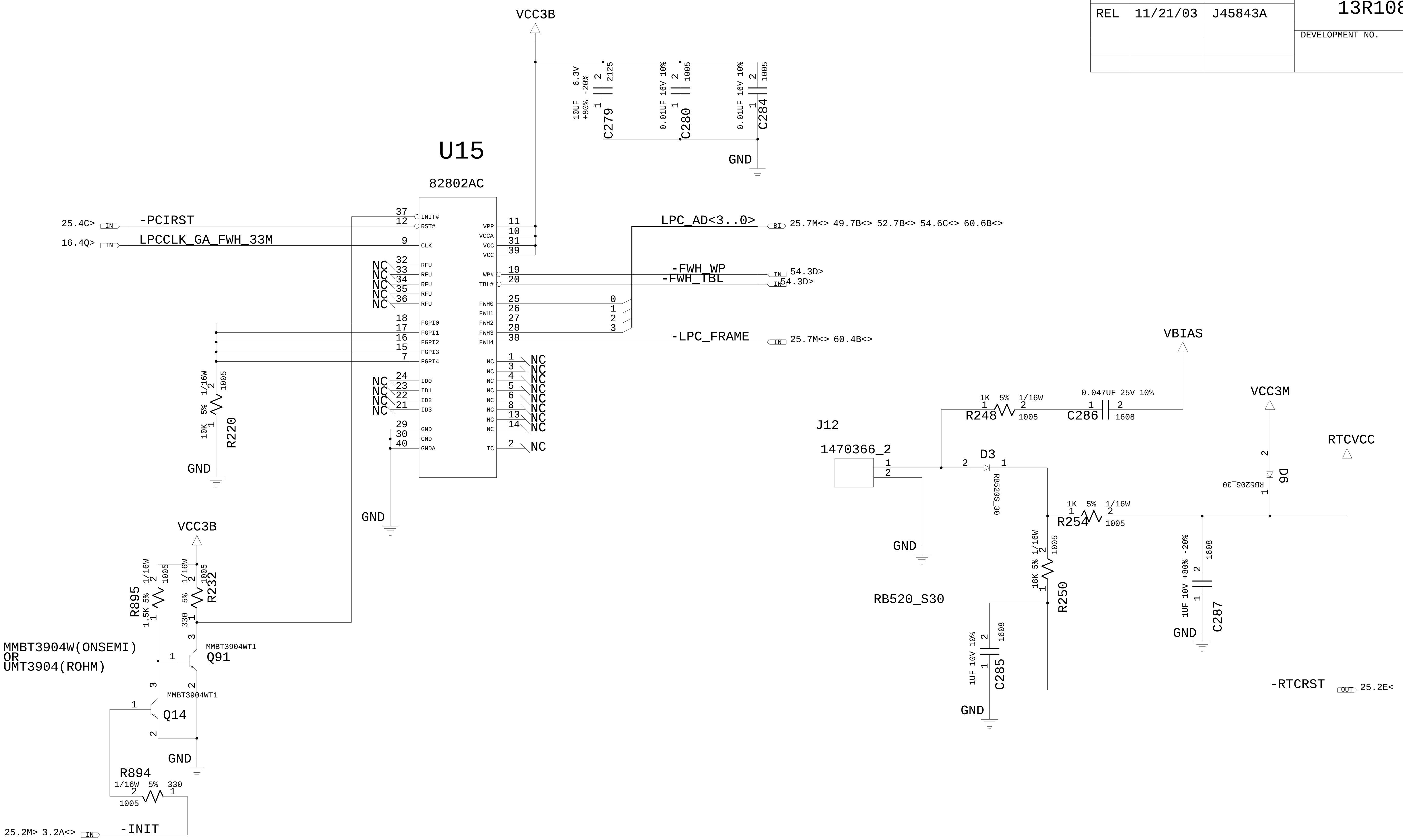

VCC3B
10UF 6.3V +80% -20% 2125
C279
0.01UF 16V 10% 1005
C280
0.01UF 16V 10% 1005
C284
GND
U15
82802AC
INIT#
RST#
CLK
RFU
FGPI0
FGPI1
FGPI2
FGPI3
FGPI4
ID0
ID1
ID2
ID3
GND
GNDA
VPP
VCCA
VCC
WP#
TBL#
FWH0
FWH1
FWH2
FWH3
FWH4
NC
IC
25.4C> IN -PCIRST
16.4Q> IN LPCCLK_GA_FWH_33M
LPC_AD<3..0> BI 25.7M<> 49.7B<> 52.7B<> 54.6C<> 60.6B<>
-FWH_WP IN 54.3D>
-FWH_TBL IN 54.3D>
-LPC_FRAME IN 25.7M<> 60.4B<>
R220 10K 5% 1/16W 1005
VCC3B
R895 1.5K 5% 1/16W 1005
R232 330 5% 1/16W 1005
MMBT3904W(ONSEMI)
OR
UMT3904(ROHM)
MMBT3904WT1
Q91
MMBT3904WT1
Q14
R894 1/16W 5% 330 1005
25.2M> 3.2A<> IN -INIT
VBIAS
R248 1K 5% 1/16W 1005
C286 0.047UF 25V 10% 1608
VCC3M
J12
1470366_2
D3
RB520S_30
D6
RB520S_30
RTCVCC
R254 1K 5% 1/16W 1005
R250 18K 5% 1/16W 1005
C287 1UF 10V +80% -20% 1608
RB520_S30
C285 1UF 10V 10% 1608
-RTCRST OUT 25.2E<

DESIGNER	Y.I	11/21/03	PART NO. 13R1088
CHECKED	Y.Y	11/21/03	TITLE ROME-1 RWK(V099)
APPROVED	K.T	11/21/03	FWH,RTC BATTERY
CLASS	K.T	11/21/03	

THIS DOCUMENT IS THE PROPERTY OF IBM ITS USE IS AUTHORIZED ONLY FOR RESPONDING TO A REQUEST FOR QUOTATION OR FOR THE PERFORMANCE OF WORK FOR IBM. ALL QUESTIONS MUST BE REFERRED TO THE IBM PURCHASING DEPARTMENT.

IBM CONFIDENTIAL

13R1088

ATI TABLE 6/7

	M6/M7	M9/M10
R270	ASM	NO_ASM
R329	NO_ASM	ASM

REL	DATE	EC NO.
REL	11/21/03	J45843A

PART NO. 13R1088

DEVELOPMENT NO.

Q/M 49 /82

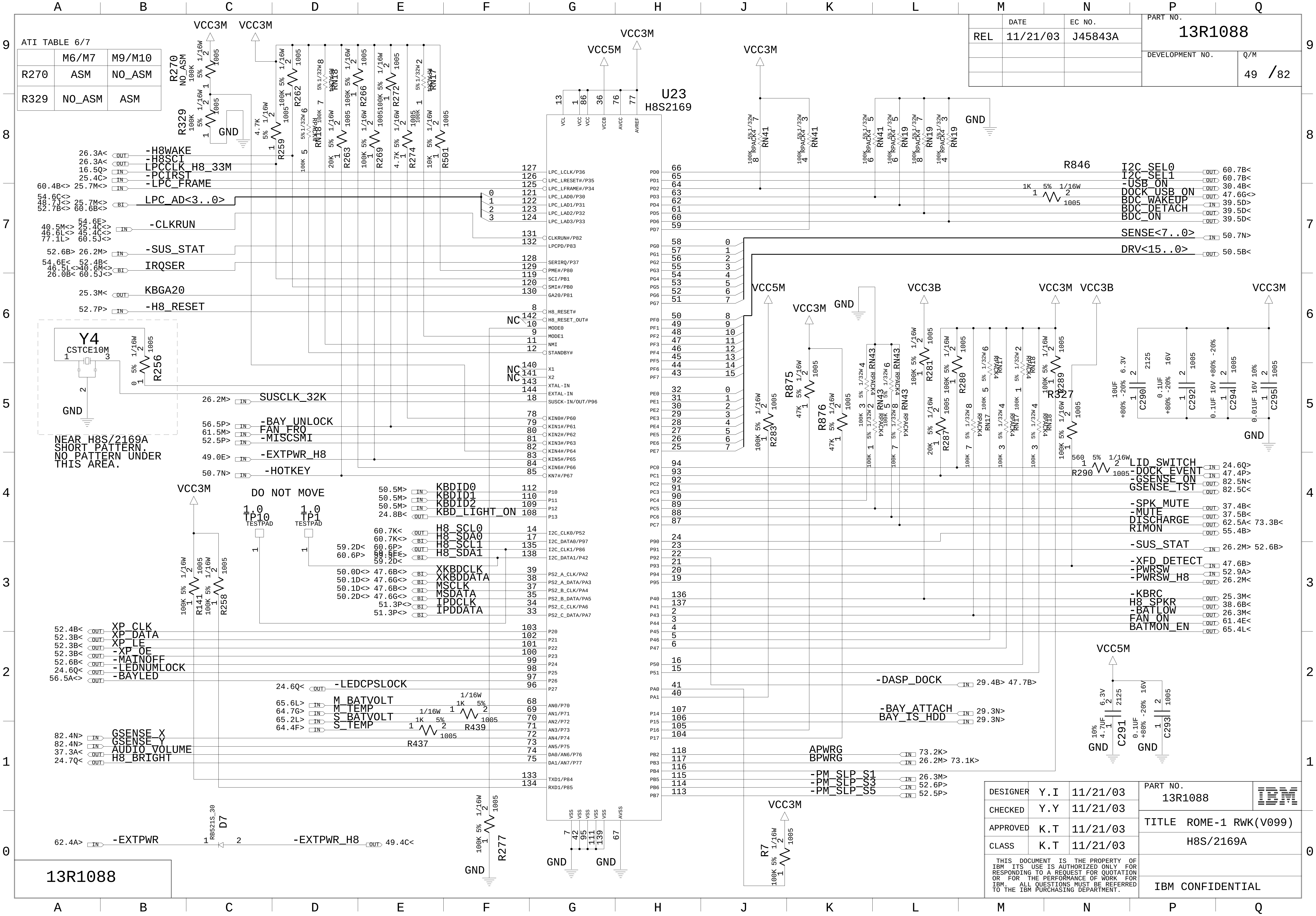

U23
H8S2169
VCC3M
VCC5M
VCC3B
GND
Y4
CSTCE10M
R256
R270 NO_ASM
R329
R259 R262 R263 R266 R269 R272 R274 R501
RN18 RN17 RN41 RN19 RN43
R846
R875 R876 R283 R281 R280 R287 R289 R327 R290
C290 C291 C292 C293 C294 C295
R141 R258 R277 R7 R437 R439
D7 RB521S_30
TP10 TP1 TESTPAD
1.0
DO NOT MOVE
NEAR H8S/2169A
SHORT PATTERN.
NO PATTERN UNDER
THIS AREA.
NC
-H8WAKE
-H8SCI
LPCCLK_H8_33M
-PCIRST
-LPC_FRAME
LPC_AD<3..0>
-CLKRUN
-SUS_STAT
IRQSER
KBGA20
-H8_RESET
SUSCLK_32K
-BAY_UNLOCK
FAN_FRQ
-MISCSMI
-EXTPWR_H8
-HOTKEY
KBDID0
KBDID1
KBDID2
KBD_LIGHT_ON
H8_SCL0
H8_SDA0
H8_SCL1
H8_SDA1
XKBDCLK
XKBDDATA
MSCLK
MSDATA
IPDCLK
IPDDATA
XP_CLK
XP_DATA
XP_LE
-XP_OE
-MAINOFF
-LEDNUMLOCK
-BAYLED
-LEDCPSLOCK
M_BATVOLT
M_TEMP
S_BATVOLT
S_TEMP
GSENSE_X
GSENSE_Y
AUDIO_VOLUME
H8_BRIGHT
-EXTPWR
-EXTPWR_H8
I2C_SEL0
I2C_SEL1
-USB_ON
DOCK_USB_ON
BDC_WAKEUP
BDC_DETACH
BDC_ON
SENSE<7..0>
DRV<15..0>
LID_SWITCH
-DOCK_EVENT
-GSENSE_ON
GSENSE_TST
-SPK_MUTE
-MUTE
DISCHARGE
RIMON
-SUS_STAT
-XFD_DETECT
-PWRSW
-PWRSW_H8
-KBRC
H8_SPKR
-BATLOW
FAN_ON
BATMON_EN
-DASP_DOCK
-BAY_ATTACH
BAY_IS_HDD
APWRG
BPWRG
-PM_SLP_S1
-PM_SLP_S3
-PM_SLP_S5

DESIGNER Y.I 11/21/03
CHECKED Y.Y 11/21/03
APPROVED K.T 11/21/03
CLASS K.T 11/21/03

PART NO. 13R1088

IBM

TITLE ROME-1 RWK(V099)

H8S/2169A

THIS DOCUMENT IS THE PROPERTY OF IBM ITS USE IS AUTHORIZED ONLY FOR RESPONDING TO A REQUEST FOR QUOTATION OR FOR THE PERFORMANCE OF WORK FOR IBM. ALL QUESTIONS MUST BE REFERRED TO THE IBM PURCHASING DEPARTMENT.

IBM CONFIDENTIAL

13R1088

	DATE	EC NO.
REL	11/21/03	J45843A

PART NO.	13R1088
DEVELOPMENT NO.	Q/M 50 /82

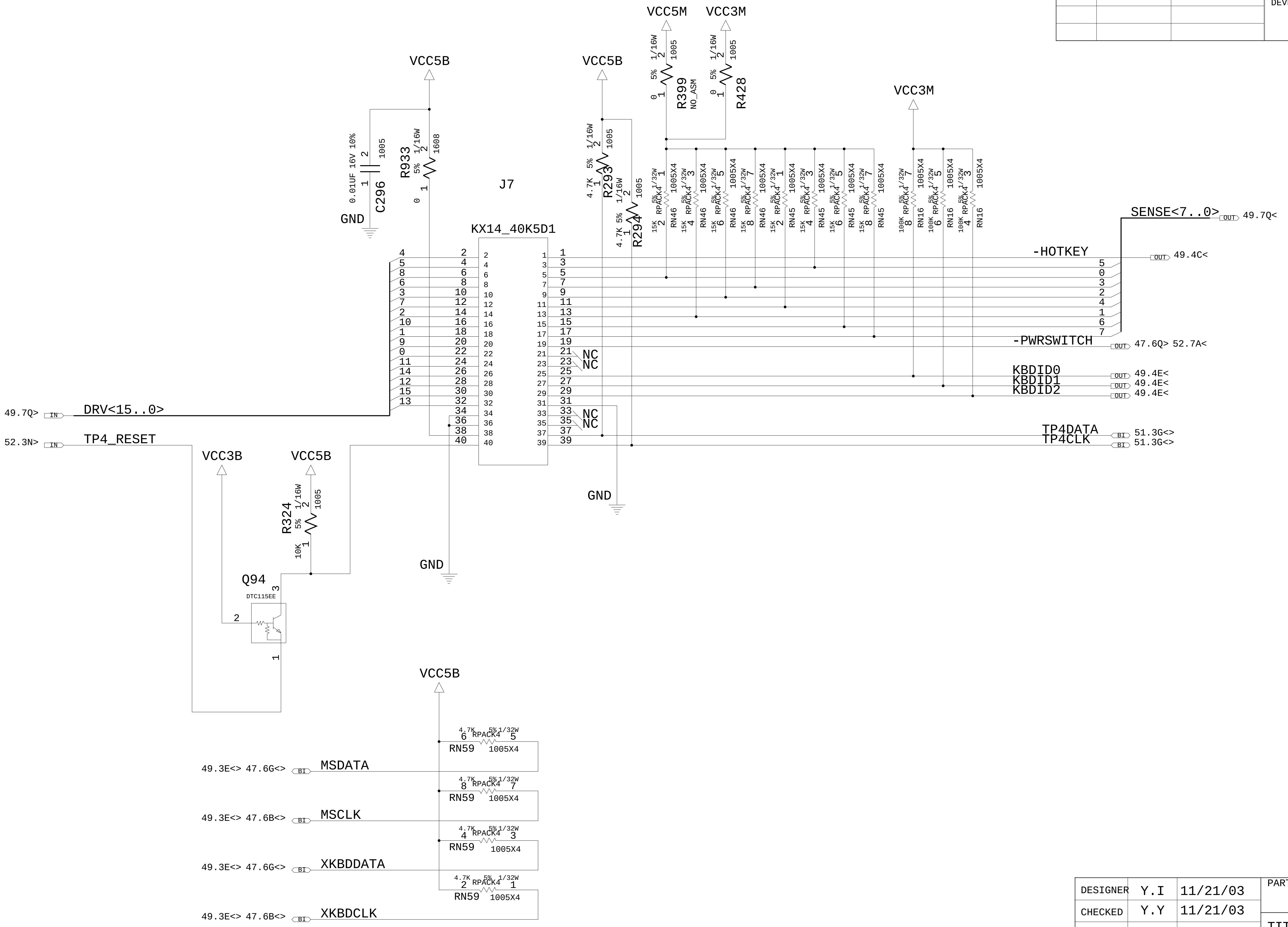
VCC5B
C296
0.01UF 16V 10%
1005
GND
R933
0 5% 1/16W
1608
J7
KX14_40K5D1
VCC5B
R293
4.7K 5% 1/16W
1005
R294
4.7K 5% 1/16W
1005
VCC5M
VCC3M
R399
NO_ASM
0 5% 1/16W
1005
R428
0 5% 1/16W
1005
VCC3M
RN46
RN45
RN16
15K 5% 1/32W
100K 5% 1/32W
RPACK4
1005X4
SENSE<7..0>
49.7Q<
-HOTKEY
49.4C<
-PWRSWITCH
47.6Q> 52.7A<
KBDID0
KBDID1
KBDID2
49.4E<
49.4E<
49.4E<
TP4DATA
TP4CLK
51.3G<>
51.3G<>
NC
NC
NC
NC
GND
49.7Q>
DRV<15..0>
52.3N>
TP4_RESET
VCC3B
VCC5B
R324
10K 5% 1/16W
1005
Q94
DTC115EE
GND
VCC5B
RN59
4.7K 5% 1/32W
RPACK4
1005X4
49.3E<> 47.6G<>
MSDATA
49.3E<> 47.6B<>
MSCLK
49.3E<> 47.6G<>
XKBDDATA
49.3E<> 47.6B<>
XKBDCLK
IN
OUT
BI

13R1088

DESIGNER	Y.I	11/21/03	PART NO. 13R1088	IBM
CHECKED	Y.Y	11/21/03		
APPROVED	K.T	11/21/03	TITLE ROME-1 RWK(V099)	
CLASS	K.T	11/21/03	KEYBOARD CONNECTOR	

IBM CONFIDENTIAL

	DATE	EC NO.
REL	11/21/03	J45843A

PART NO.
13R1088

DEVELOPMENT NO.

Q/M
51 /82

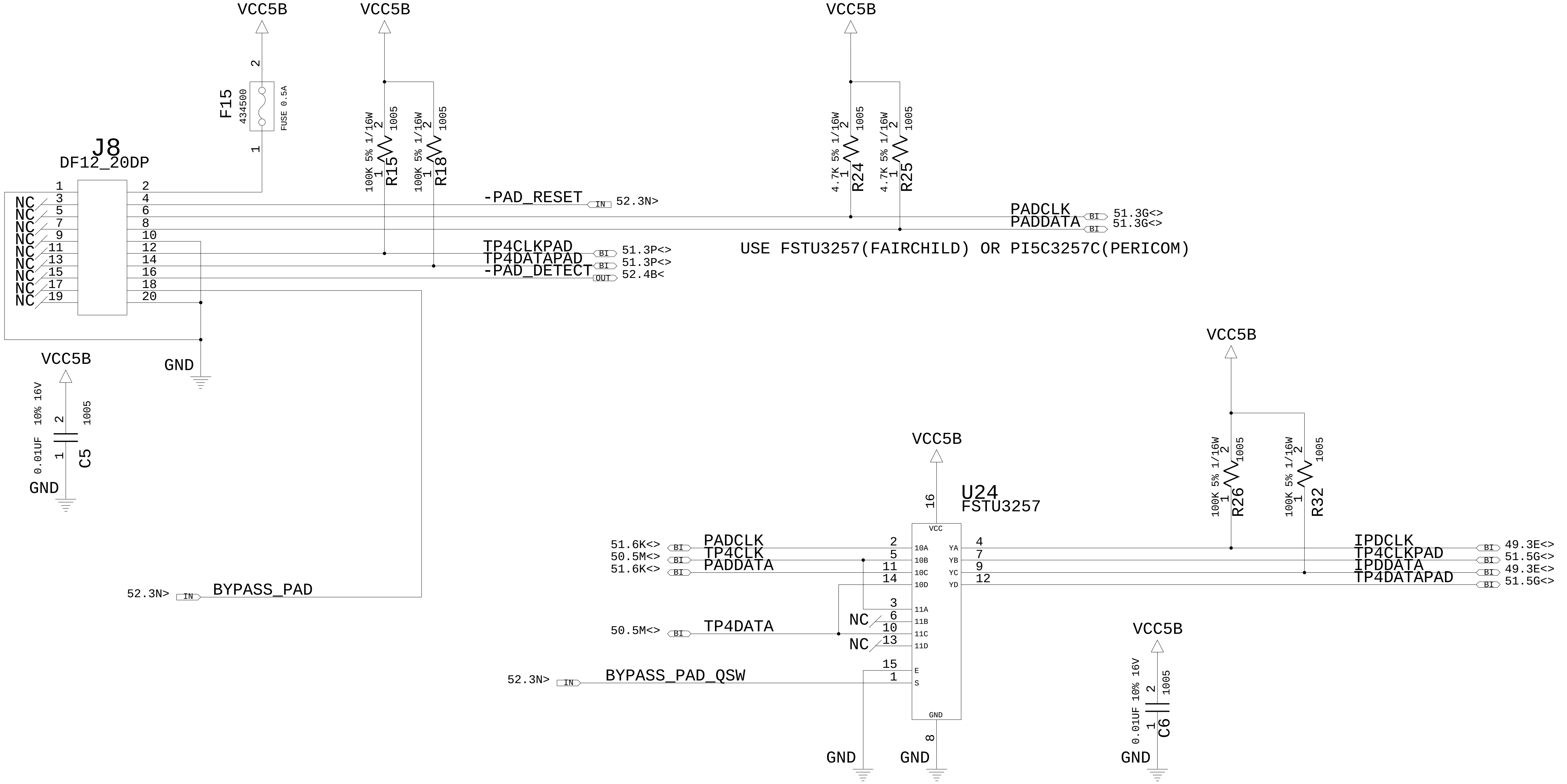

VCC5B
F15
434500
FUSE 0.5A
J8
DF12_20DP
NC
R15
R18
100K 5% 1/16W
1005
-PAD_RESET
IN
52.3N>
R24
R25
4.7K 5% 1/16W
PADCLK
PADDATA
BI
51.3G<>
TP4CLKPAD
TP4DATAPAD
-PAD_DETECT
51.3P<>
OUT
52.4B<
USE FSTU3257(FAIRCHILD) OR PI5C3257C(PERICOM)
GND
C5
0.01UF 10% 16V
52.3N>
BYPASS_PAD
U24
FSTU3257
VCC
10A
10B
10C
10D
11A
11B
11C
11D
E
S
YA
YB
YC
YD
51.6K<>
50.5M<>
TP4CLK
TP4DATA
BYPASS_PAD_QSW
R26
R32
IPDCLK
IPDDATA
49.3E<>
51.5G<>
C6

DESIGNER	Y.I	11/21/03
CHECKED	Y.Y	11/21/03
APPROVED	K.T	11/21/03
CLASS	K.T	11/21/03

PART NO.
13R1088

TITLE ROME-1 RWK(V099)

TOUCH PAD CONNECTOR

THIS DOCUMENT IS THE PROPERTY OF IBM ITS USE IS AUTHORIZED ONLY FOR RESPONDING TO A REQUEST FOR QUOTATION OR FOR THE PERFORMANCE OF WORK FOR IBM. ALL QUESTIONS MUST BE REFERRED TO THE IBM PURCHASING DEPARTMENT.

IBM CONFIDENTIAL

13R1088

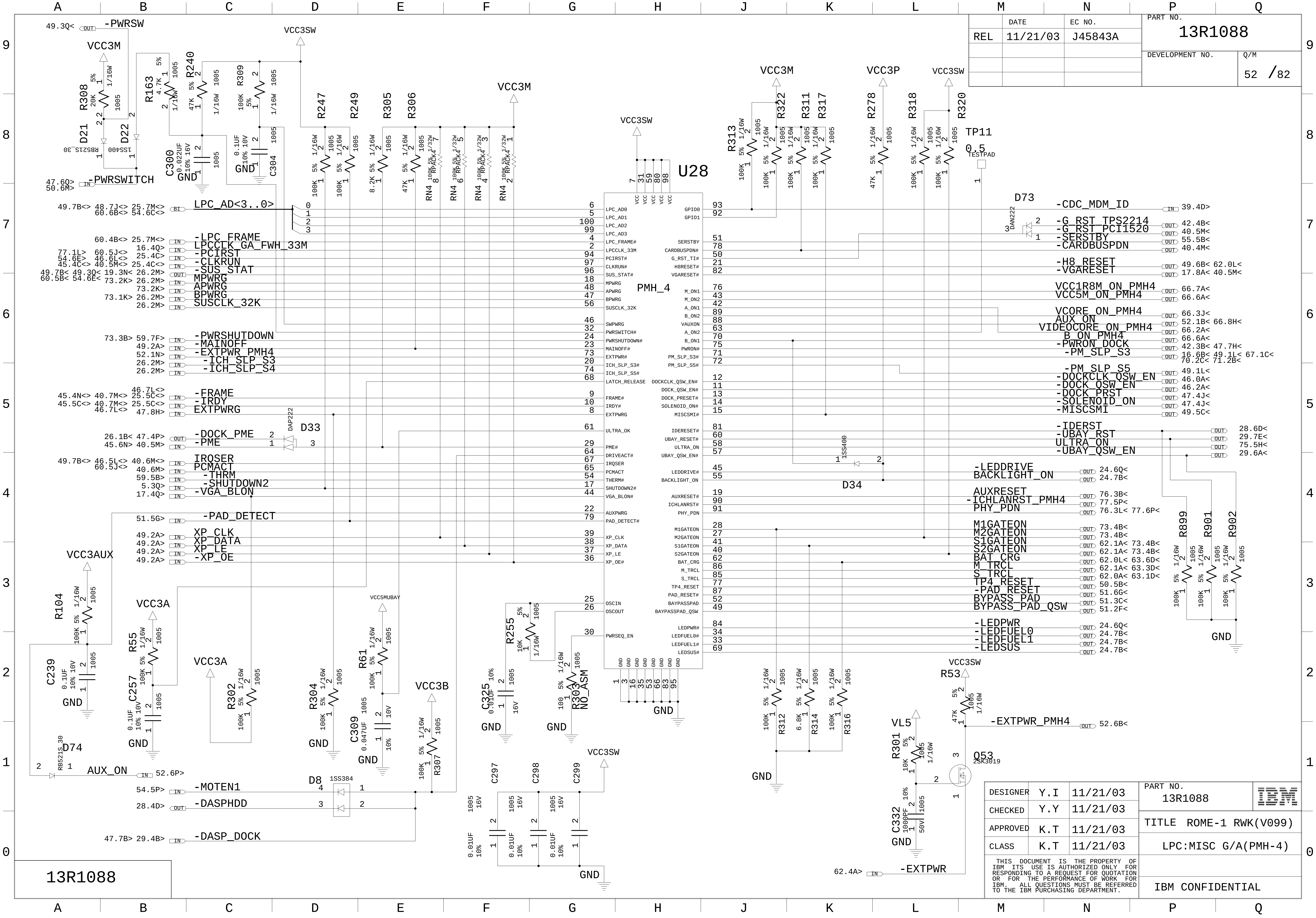
U28
PMH_4
VCC3SW
VCC3M
VCC3P
VCC3AUX
VCC3A
VCC3B
VCC5MUBAY
VL5
GND
-PWRSW
-PWRSWITCH
LPC_AD<3..0>
-LPC_FRAME
LPCCLK_GA_FWH_33M
-PCIRST
-CLKRUN
-SUS_STAT
MPWRG
APWRG
BPWRG
SUSCLK_32K
-PWRSHUTDOWN
-MAINOFF
-EXTPWR_PMH4
-ICH_SLP_S3
-ICH_SLP_S4
-FRAME
-IRDY
EXTPWRG
-DOCK_PME
-PME
IRQSER
PCMACT
-THRM
-SHUTDOWN2
-VGA_BLON
-PAD_DETECT
XP_CLK
XP_DATA
XP_LE
-XP_OE
AUX_ON
-MOTEN1
-DASPHDD
-DASP_DOCK
-EXTPWR
-CDC_MDM_ID
-G_RST_TPS2214
-G_RST_PCI1520
-SERSTBY
-CARDBUSPDN
-H8_RESET
-VGARESET
VCC1R8M_ON_PMH4
VCC5M_ON_PMH4
VCORE_ON_PMH4
AUX_ON
VIDEOCORE_ON_PMH4
B_ON_PMH4
-PWRON_DOCK
-PM_SLP_S3
-PM_SLP_S5
-DOCKCLK_QSW_EN
-DOCK_QSW_EN
-DOCK_PRST
-SOLENOID_ON
-MISCSMI
-IDERST
-UBAY_RST
ULTRA_ON
-UBAY_QSW_EN
-LEDDRIVE
BACKLIGHT_ON
AUXRESET
-ICHLANRST_PMH4
PHY_PDN
M1GATEON
M2GATEON
S1GATEON
S2GATEON
BAT_CRG
M_TRCL
S_TRCL
TP4_RESET
-PAD_RESET
BYPASS_PAD
BYPASS_PAD_QSW
-LEDPWR
-LEDFUEL0
-LEDFUEL1
-LEDSUS
-EXTPWR_PMH4
R308 R163 R240 R309 R247 R249 R305 R306 RN4
R313 R322 R311 R317 R278 R318 R320 TP11 TESTPAD
D21 D22 D73 D33 D34 D74 D8 Q53 2SK3019
C300 C304 C239 C257 C309 C325 C297 C298 C299 C332
R104 R55 R302 R304 R61 R307 R255 R303 NO_ASM
R312 R314 R316 R301 R53 R899 R901 R902
DAN222 DAP222 1SS400 1SS384 RB521S_30

DATE	EC NO.
REL 11/21/03	J45843A

PART NO. 13R1088

DEVELOPMENT NO.

Q/M 52 /82

DESIGNER	Y.I	11/21/03
CHECKED	Y.Y	11/21/03
APPROVED	K.T	11/21/03
CLASS	K.T	11/21/03

PART NO. 13R1088

IBM

TITLE ROME-1 RWK(V099)

LPC:MISC G/A(PMH-4)

IBM CONFIDENTIAL

13R1088

	DATE	EC NO.
REL	11/21/03	J45843A

PART NO. 13R1088

DEVELOPMENT NO.

Q/M 53 /82

ADDITIONAL CAPS FOR VINT16 OF VCCCPUCORE.

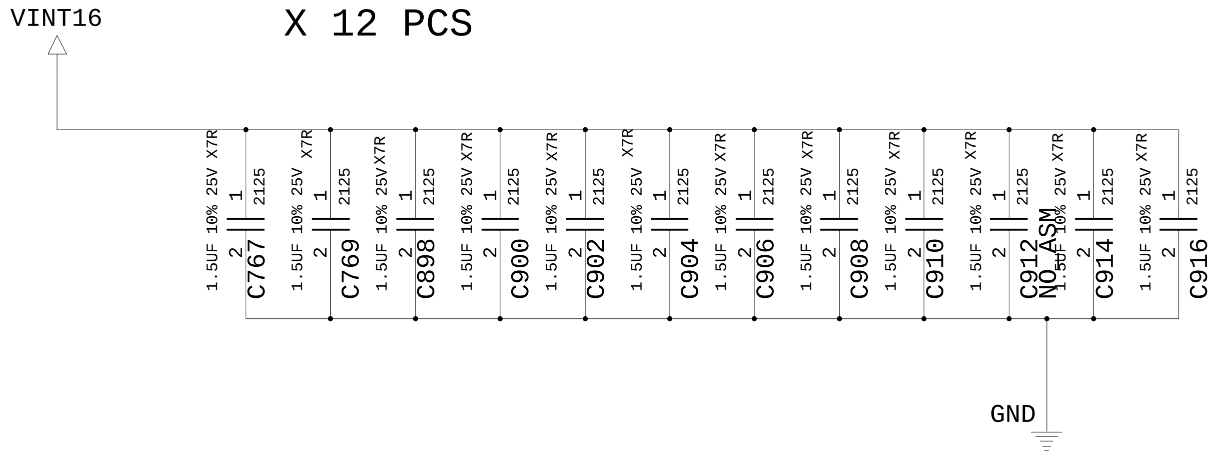
VINT16
X 12 PCS
C767 1.5UF 10% 25V X7R 2125
C769 1.5UF 10% 25V X7R 2125
C898 1.5UF 10% 25V X7R 2125
C900 1.5UF 10% 25V X7R 2125
C902 1.5UF 10% 25V X7R 2125
C904 1.5UF 10% 25V X7R 2125
C906 1.5UF 10% 25V X7R 2125
C908 1.5UF 10% 25V X7R 2125
C910 1.5UF 10% 25V X7R 2125
C912 NO_ASM 1.5UF 10% 25V X7R 2125
C914 1.5UF 10% 25V X7R 2125
C916 1.5UF 10% 25V X7R 2125
1
2
GND

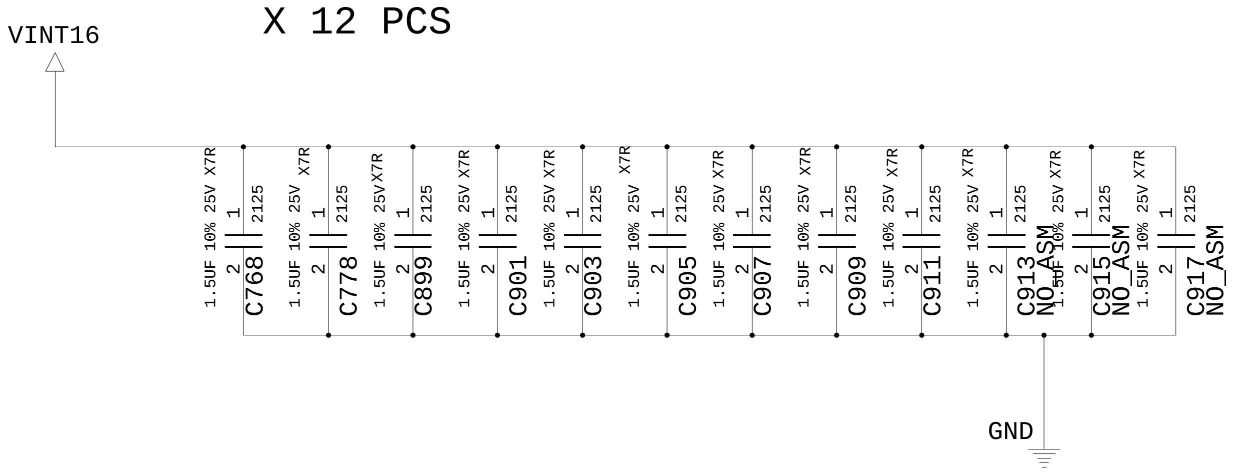
VINT16
X 12 PCS
C768 1.5UF 10% 25V X7R 2125
C778 1.5UF 10% 25V X7R 2125
C899 1.5UF 10% 25V X7R 2125
C901 1.5UF 10% 25V X7R 2125
C903 1.5UF 10% 25V X7R 2125
C905 1.5UF 10% 25V X7R 2125
C907 1.5UF 10% 25V X7R 2125
C909 1.5UF 10% 25V X7R 2125
C911 1.5UF 10% 25V X7R 2125
C913 NO_ASM 1.5UF 10% 25V X7R 2125
C915 NO_ASM 1.5UF 10% 25V X7R 2125
C917 NO_ASM 1.5UF 10% 25V X7R 2125
1
2
GND

13R1088

DESIGNER	Y.I	11/21/03
CHECKED	Y.Y	11/21/03
APPROVED	K.T	11/21/03
CLASS	K.T	11/21/03

PART NO. 13R1088

IBM

TITLE ROME-1 RWK(V099)

VCCCPUCORE DECAP

IBM CONFIDENTIAL

	DATE	EC NO.
REL	11/21/03	J45843A

PART NO. 13R1088

DEVELOPMENT NO.

Q/M 54 /82

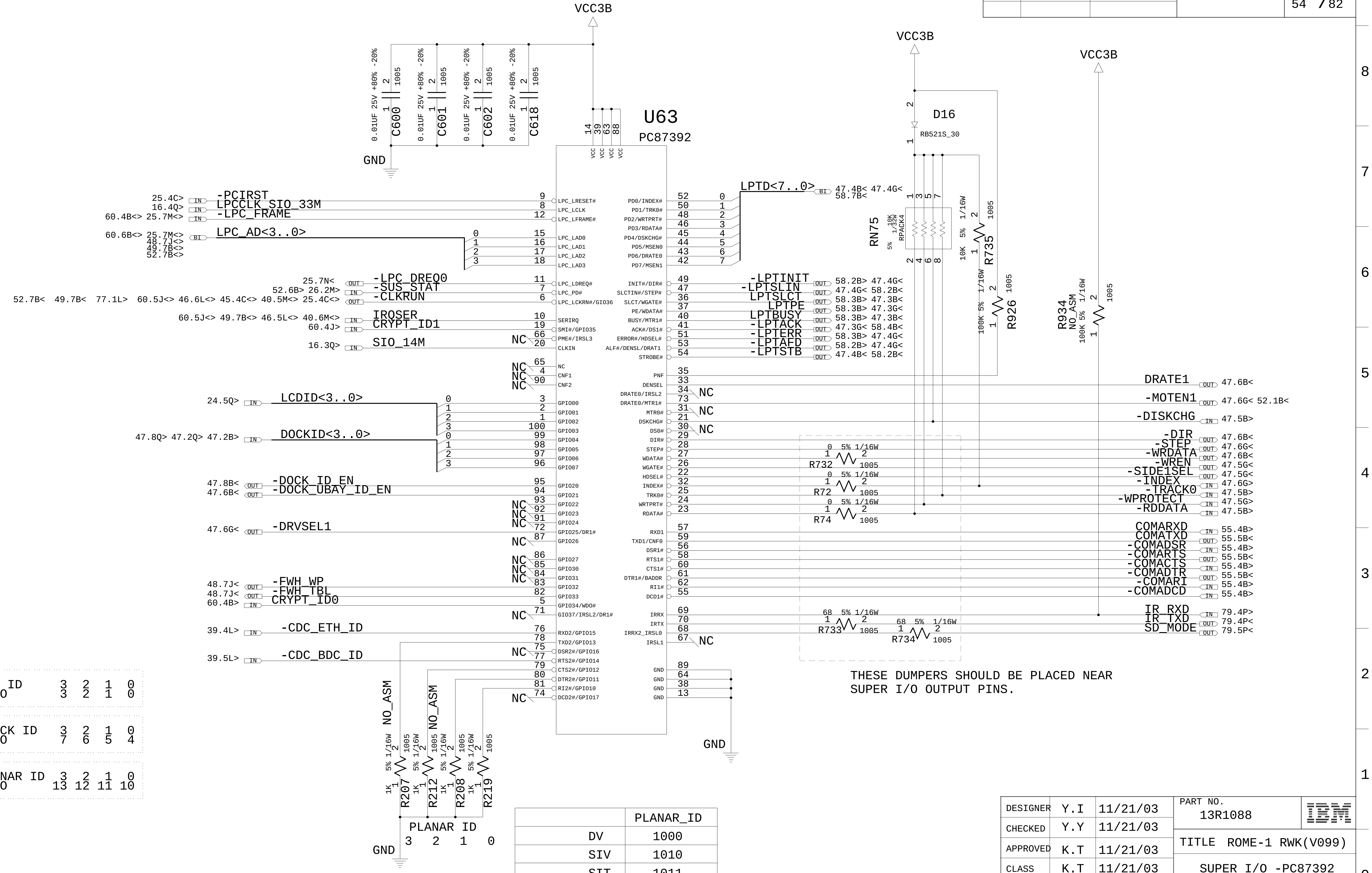

VCC3B
U63
PC87392
C600
C601
C602
C618
0.01UF 25V +80% -20%
1005
GND
25.4C> IN -PCIRST 9 LPC_LRESET#
16.4Q> IN LPCCLK_SIO_33M 8 LPC_LCLK
60.4B<> 25.7M<> IN -LPC_FRAME 12 LPC_LFRAME#
60.6B<> 25.7M<> 48.7J<> 49.7B<> 52.7B<> BI LPC_AD<3..0> 15 16 17 18 LPC_LAD0 LPC_LAD1 LPC_LAD2 LPC_LAD3
25.7N< OUT -LPC_DREQ0 11 LPC_LDREQ#
52.6B> 26.2M> IN -SUS_STAT 7 LPC_PD#
52.7B< 49.7B< 77.1L> 60.5J<> 46.6L<> 45.4C<> 40.5M<> 25.4C<> OUT -CLKRUN 6 LPC_LCKRN#/GIO36
60.5J<> 49.7B<> 46.5L<> 40.6M<> IN IRQSER 10 SERIRQ
60.4J> IN CRYPT_ID1 19 SMI#/GPIO35
NC 66 PME#/IRSL3
16.3Q> IN SIO_14M 20 CLKIN
NC 65 NC
NC 4 CNF1
NC 90 CNF2
24.5Q> IN LCDID<3..0> 3 2 1 100 GPIO00 GPIO01 GPIO02 GPIO03
47.8Q> 47.2Q> 47.2B> IN DOCKID<3..0> 99 98 97 96 GPIO04 GPIO05 GPIO06 GPIO07
47.8B< OUT -DOCK_ID_EN 95 GPIO20
47.6B< OUT -DOCK_UBAY_ID_EN 94 GPIO21
NC 93 GPIO22
NC 92 GPIO23
NC 91 GPIO24
47.6G< OUT -DRVSEL1 72 GPIO25/DR1#
NC 87 GPIO26
NC 86 GPIO27
NC 85 GPIO30
NC 84 GPIO31
48.7J< OUT -FWH_WP 83 GPIO32
48.7J< OUT -FWH_TBL 82 GPIO33
60.4B> IN CRYPT_ID0 5 GPIO34/WDO#
NC 71 GIO37/IRSL2/DR1#
39.4L> IN -CDC_ETH_ID 76 RXD2/GPIO15
78 TXD2/GPIO13
NC 75 DSR2#/GPIO16
NC 77 RTS2#/GPIO14
79 CTS2#/GPIO12
80 DTR2#/GPIO11
81 RI2#/GPIO10
NC 74 DCD2#/GPIO17
39.5L> IN -CDC_BDC_ID
NO_ASM
R207 R212 R208 R219
1K 5% 1/16W 1005
PLANAR ID 3 2 1 0
LPTD<7..0> BI 47.4B< 47.4G< 58.7B<
PD0/INDEX# 52 PD1/TRK0# 50 PD2/WRTPRT# 48 PD3/RDATA# 46 PD4/DSKCHG# 45 PD5/MSEN0 44 PD6/DRATE0 43 PD7/MSEN1 42
INIT#/DIR# 49 -LPTINIT OUT 58.2B> 47.4G<
SLCTIN#/STEP# 47 -LPTSLIN OUT 47.4G< 58.2B<
SLCT/WGATE# 36 LPTSLCT OUT 58.3B> 47.3B<
PE/WDATA# 37 LPTPE OUT 58.3B> 47.3G<
BUSY/MTR1# 40 LPTBUSY OUT 58.3B> 47.3B<
ACK#/DS1# 41 -LPTACK OUT 47.3G< 58.4B<
ERROR#/HDSEL# 51 -LPTERR OUT 58.3B> 47.4G<
ALF#/DENSL/DRAT1 53 -LPTAFD OUT 58.2B> 47.4G<
STROBE# 54 -LPTSTB OUT 47.4B> 58.2B<
VCC3B
D16 RB521S_30
RN75 10K 5% 1/32W RPACK4
R735 10K 5% 1/16W 1005
R926 100K 5% 1/16W 1005
R934 NO_ASM 100K 5% 1/16W 1005
PNF 35
DENSEL 33 DRATE1 OUT 47.6B<
DRATE0/IRSL2 34 NC
DRATE0/MTR1# 73 -MOTEN1 OUT 47.6G< 52.1B<
MTR0# 31 NC
DSKCHG# 21 -DISKCHG IN 47.5B>
DS0# 30 NC
DIR# 29 -DIR OUT 47.6B<
STEP# 28 -STEP OUT 47.6G<
WDATA# 27 -WRDATA OUT 47.6B<
WGATE# 26 -WREN OUT 47.5G<
HDSEL# 22 -SIDE1SEL OUT 47.5G<
INDEX# 32 -INDEX IN 47.6G>
TRK0# 25 -TRACK0 IN 47.5B>
WRTPRT# 24 -WPROTECT IN 47.5G>
RDATA# 23 -RDDATA IN 47.5B>
R732 R72 R74 0 5% 1/16W 1005
RXD1 57 COMARXD IN 55.4B>
TXD1/CNF0 59 COMATXD OUT 55.5B<
DSR1# 56 -COMADSR IN 55.4B>
RTS1# 58 -COMARTS OUT 55.5B<
CTS1# 60 -COMACTS IN 55.4B>
DTR1#/BADDR 61 -COMADTR OUT 55.5B<
RI1# 62 -COMARI IN 55.4B>
DCD1# 55 -COMADCD IN 55.4B>
IRRX 69 IR_RXD IN 79.4P>
IRTX 70 IR_TXD OUT 79.4P<
IRRX2_IRSL0 68 SD_MODE OUT 79.5P<
IRSL1 67 NC
R733 68 5% 1/16W 1005
R734 68 5% 1/16W 1005
GND 89 64 38 13
GND

THESE DUMPERS SHOULD BE PLACED NEAR
SUPER I/O OUTPUT PINS.

LCD ID	3	2	1	0
GPIO	3	2	1	0

-DOCK ID	3	2	1	0
GPIO	7	6	5	4

PLANAR ID	3	2	1	0
GPIO	13	12	11	10

	PLANAR_ID
DV	1000
SIV	1010
SIT	1011
SVT	1100
SVT M9GLCSP64	0101

13R1088

DESIGNER	Y.I	11/21/03
CHECKED	Y.Y	11/21/03
APPROVED	K.T	11/21/03
CLASS	K.T	11/21/03

PART NO. 13R1088

IBM

TITLE ROME-1 RWK(V099)

SUPER I/O -PC87392

100PIN PITCH=0.5MM

IBM CONFIDENTIAL

THIS DOCUMENT IS THE PROPERTY OF IBM ITS USE IS AUTHORIZED ONLY FOR RESPONDING TO A REQUEST FOR QUOTATION OR FOR THE PERFORMANCE OF WORK FOR IBM. ALL QUESTIONS MUST BE REFERRED TO THE IBM PURCHASING DEPARTMENT.

	DATE	EC NO.
REL	11/21/03	J45843A

PART NO. 13R1088

DEVELOPMENT NO.

Q/M 55 /82

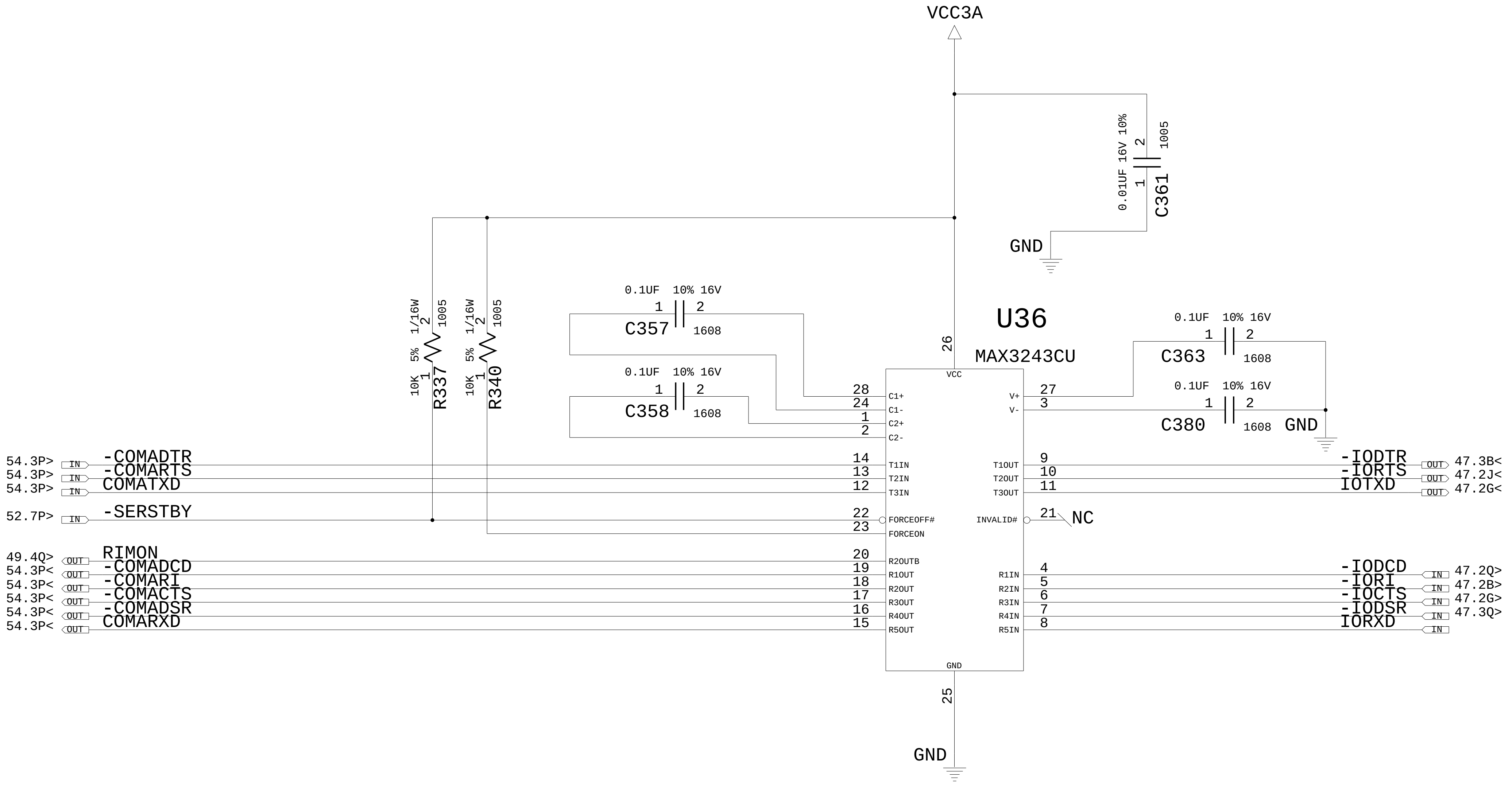
VCC3A
C361
0.01UF 16V 10%
1005
1
2
GND
R337
10K 5% 1/16W
1005
R340
10K 5% 1/16W
1005
C357
0.1UF 10% 16V
1608
C358
0.1UF 10% 16V
1608
U36
MAX3243CU
VCC
26
28 C1+
24 C1-
1 C2+
2 C2-
14 T1IN
13 T2IN
12 T3IN
22 FORCEOFF#
23 FORCEON
20 R2OUTB
19 R1OUT
18 R2OUT
17 R3OUT
16 R4OUT
15 R5OUT
GND
25
GND
V+ 27
V- 3
T1OUT 9
T2OUT 10
T3OUT 11
INVALID# 21
NC
R1IN 4
R2IN 5
R3IN 6
R4IN 7
R5IN 8
C363
0.1UF 10% 16V
1608
C380
0.1UF 10% 16V
1608
GND
54.3P> IN -COMADTR
54.3P> IN -COMARTS
54.3P> IN COMATXD
52.7P> IN -SERSTBY
49.4Q> OUT RIMON
54.3P< OUT -COMADCD
54.3P< OUT -COMARI
54.3P< OUT -COMACTS
54.3P< OUT -COMADSR
54.3P< OUT COMARXD
-IODTR OUT 47.3B<
-IORTS OUT 47.2J<
IOTXD OUT 47.2G<
-IODCD IN 47.2Q>
-IORI IN 47.2B>
-IOCTS IN 47.2G>
-IODSR IN 47.3Q>
IORXD IN

R1IN/R2IN/R3IN/R5IN HAVE INTERNAL PULLDOWN(5K OHM).

DO NOT WIRE SIGNALS UNDER PINS (1/2/3/24/25/26/27/28)

CHARGE PUMP CAPACITOR SHOULD BE PLACED NEAR PINS(1/2/3/24/27/28)

ADD GND SHILED UNDER CHARGE PUMP CIRCUIT TO
PROTECT POWER LINE NOISE

CAPACITORS FOR CHARGE PUMP SHOULD BE USED TYPE B AND LOW ESR TYPE.

	NORMAL MODE	POWER DOWN MODE	AUTO POWER DOWN MODE
FORCEON	HIGH	DO NOT CARE	LOW
FOCEOFF	HIGH	LOW	HIGH

13R1088

DESIGNER	Y.I	11/21/03	PART NO. 13R1088
CHECKED	Y.Y	11/21/03	TITLE ROME-1 RWK(V099)
APPROVED	K.T	11/21/03	SERIAL INTERFACE
CLASS	K.T	11/21/03	

IBM CONFIDENTIAL

	DATE	EC NO.
REL	11/21/03	J45843A

PART NO. 13R1088

DEVELOPMENT NO.

Q/M 56 /82

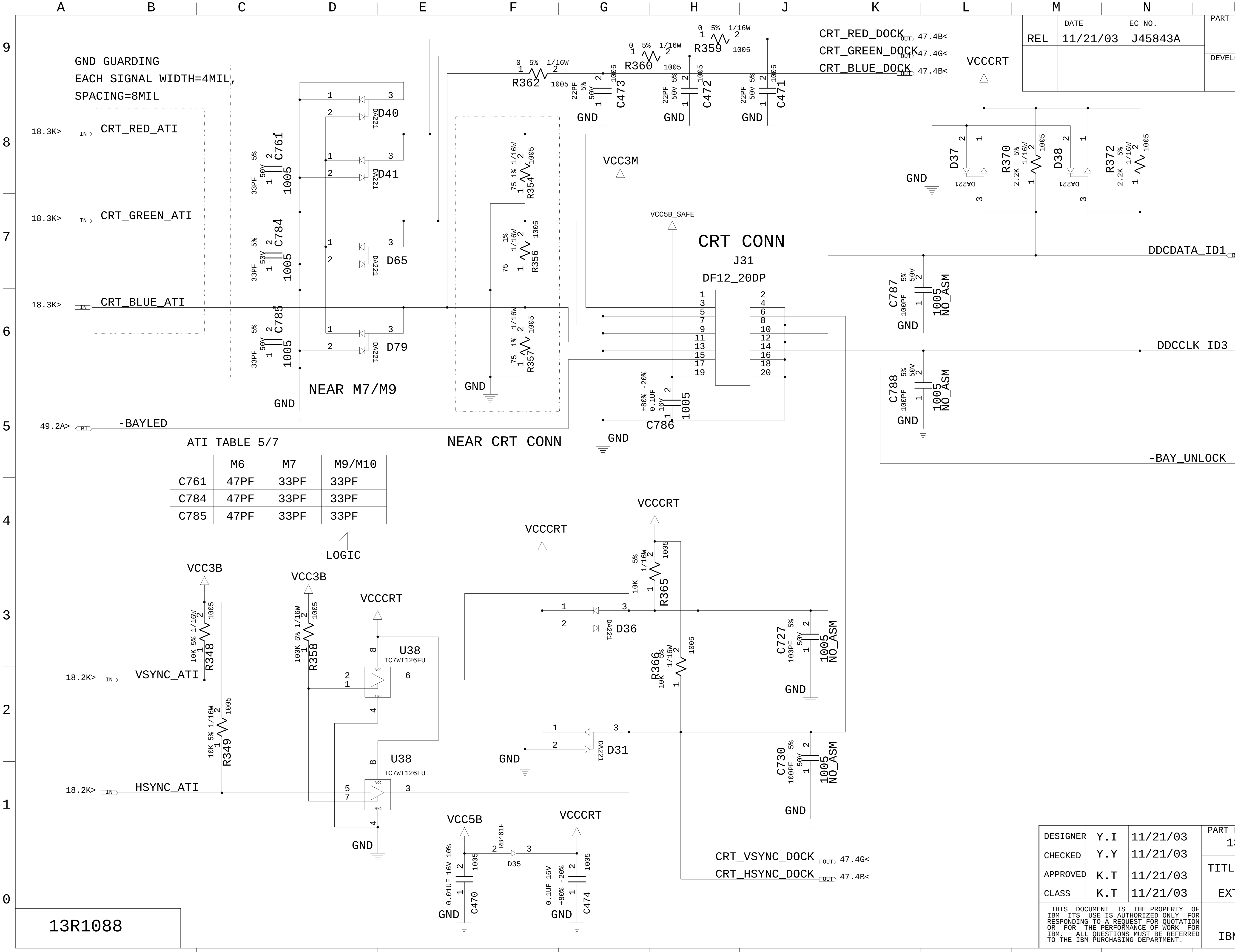

GND GUARDING
EACH SIGNAL WIDTH=4MIL,
SPACING=8MIL
18.3K> IN CRT_RED_ATI
18.3K> IN CRT_GREEN_ATI
18.3K> IN CRT_BLUE_ATI
49.2A> BI -BAYLED
C761 33PF 5% 50V 1005
C784 33PF 5% 50V 1005
C785 33PF 5% 50V 1005
D40 DA221
D41 DA221
D65 DA221
D79 DA221
NEAR M7/M9
GND
R354 75 1% 1/16W 1005
R356 75 1% 1/16W 1005
R357 75 1% 1/16W 1005
NEAR CRT CONN
R362 0 5% 1/16W 1005
R360 0 5% 1/16W 1005
R359 0 5% 1/16W 1005
C473 22PF 5% 50V 1005
C472 22PF 5% 50V 1005
C471 22PF 5% 50V 1005
CRT_RED_DOCK OUT 47.4B<
CRT_GREEN_DOCK OUT 47.4G<
CRT_BLUE_DOCK OUT 47.4B<
VCC3M
VCC5B_SAFE
CRT CONN
J31
DF12_20DP
C786 0.1UF +80% -20% 16V 1005
VCCCRT
D37 DA221
R370 2.2K 5% 1/16W 1005
D38 DA221
R372 2.2K 5% 1/16W 1005
DDCDATA_ID1 BI 18.4Q<>47.4G<
C787 100PF 5% 50V 1005 NO_ASM
DDCCLK_ID3 BI 18.6Q<> 47.4B<
C788 100PF 5% 50V 1005 NO_ASM
-BAY_UNLOCK OUT 49.5C<
LOGIC
VCC3B
R348 10K 5% 1/16W 1005
R349 10K 5% 1/16W 1005
R358 100K 5% 1/16W 1005
18.2K> IN VSYNC_ATI
18.2K> IN HSYNC_ATI
U38 TC7WT126FU
R365 10K 5% 1/16W 1005
R366 10K 5% 1/16W 1005
D36 DA221
D31 DA221
C727 100PF 5% 50V 1005 NO_ASM
C730 100PF 5% 50V 1005 NO_ASM
VCC5B
C470 0.01UF 16V 10% 1005
D35 RB461F
C474 0.1UF 16V +80% -20% 1005
CRT_VSYNC_DOCK OUT 47.4G<
CRT_HSYNC_DOCK OUT 47.4B<

ATI TABLE 5/7

	M6	M7	M9/M10
C761	47PF	33PF	33PF
C784	47PF	33PF	33PF
C785	47PF	33PF	33PF

DESIGNER	Y.I	11/21/03	PART NO. 13R1088
CHECKED	Y.Y	11/21/03	TITLE ROME-1 RWK(V099)
APPROVED	K.T	11/21/03	
CLASS	K.T	11/21/03	EXT CRT INTERFACE

IBM

THIS DOCUMENT IS THE PROPERTY OF IBM ITS USE IS AUTHORIZED ONLY FOR RESPONDING TO A REQUEST FOR QUOTATION OR FOR THE PERFORMANCE OF WORK FOR IBM. ALL QUESTIONS MUST BE REFERRED TO THE IBM PURCHASING DEPARTMENT.

IBM CONFIDENTIAL

	DATE	EC NO.
REL	11/21/03	J45843A

PART NO. 13R1088

DEVELOPMENT NO.

Q/M 57 /82

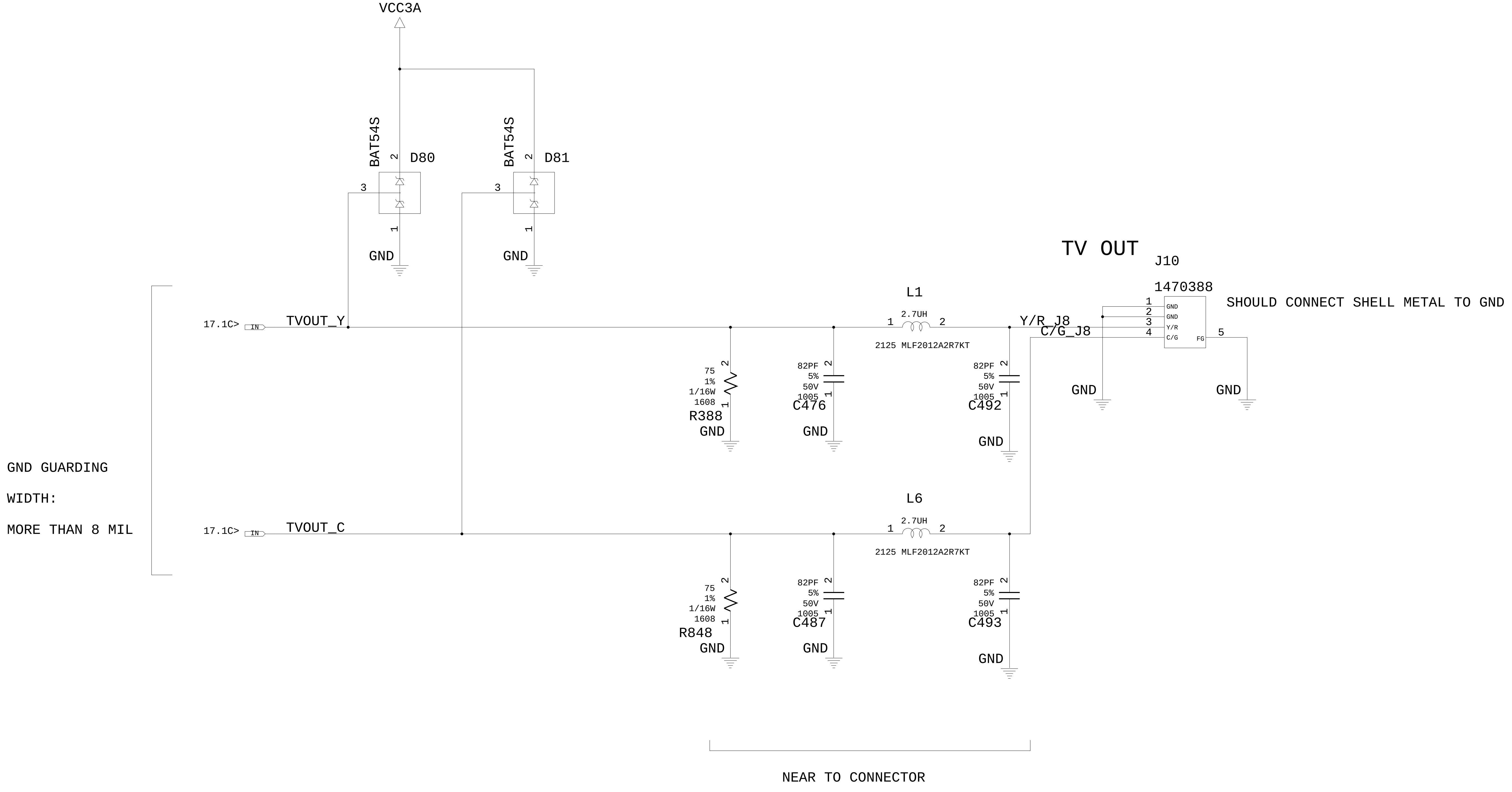

VCC3A
BAT54S
D80
BAT54S
D81
2
3
1
GND
GND
TV OUT
J10
1470388
SHOULD CONNECT SHELL METAL TO GND
L1
2.7UH
1
2
2125 MLF2012A2R7KT
Y/R_J8
C/G_J8
1 GND
2 GND
3 Y/R
4 C/G
FG 5
17.1C> IN
TVOUT_Y
17.1C> IN
TVOUT_C
75
1%
1/16W
1608
R388
GND
82PF
5%
50V
1005
C476
GND
82PF
5%
50V
1005
C492
GND
GND
GND
GND GUARDING
WIDTH:
MORE THAN 8 MIL
L6
2.7UH
2125 MLF2012A2R7KT
75
1%
1/16W
1608
R848
GND
82PF
5%
50V
1005
C487
GND
82PF
5%
50V
1005
C493
GND
NEAR TO CONNECTOR

DESIGNER	Y.I	11/21/03
CHECKED	Y.Y	11/21/03
APPROVED	K.T	11/21/03
CLASS	K.T	11/21/03

PART NO. 13R1088

IBM

TITLE ROME-1 RWK(V099)

TV OUT CONNECTOR

IBM CONFIDENTIAL

13R1088

	DATE	EC NO.
REL	11/21/03	J45843A

PART NO. 13R1088

DEVELOPMENT NO.

Q/M 58 /82

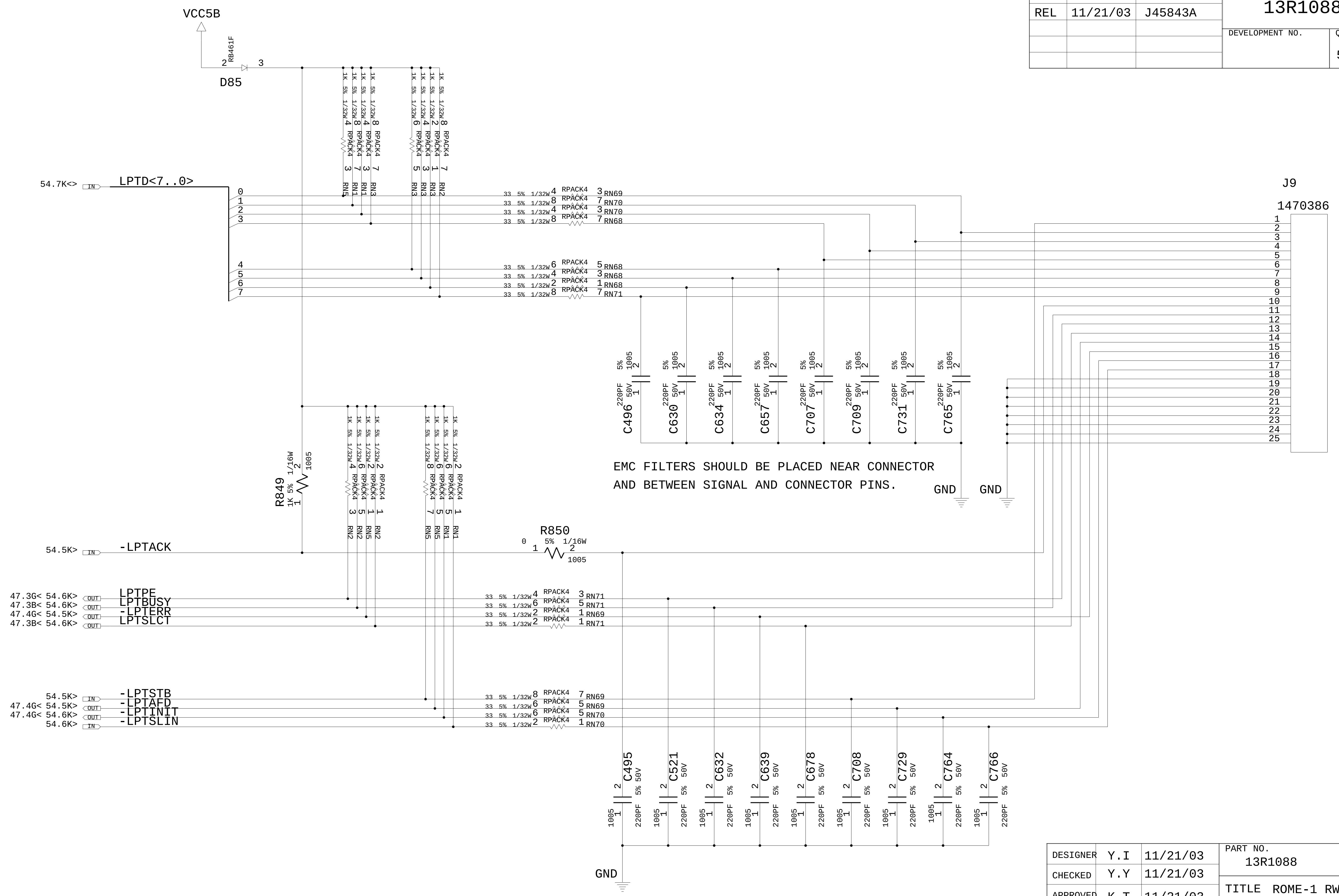

VCC5B
RB461F
2
3
D85
54.7K<>
IN
LPTD<7..0>
0
1
2
3
4
5
6
7
1K 5% 1/32W
RPACK4
RN1
RN2
RN3
RN5
33 5% 1/32W
RN68
RN69
RN70
RN71
J9
1470386
1
2
3
4
5
6
7
8
9
10
11
12
13
14
15
16
17
18
19
20
21
22
23
24
25
220PF 50V 5% 1005
C496
C630
C634
C657
C707
C709
C731
C765
GND
R849
1K 5% 1/16W
1005
R850
0 5% 1/16W
1005
54.5K>
-LPTACK
47.3G< 54.6K>
47.3B< 54.6K>
47.4G< 54.5K>
47.3B< 54.6K>
OUT
LPTPE
LPTBUSY
-LPTERR
LPTSLCT
54.5K>
47.4G< 54.5K>
47.4G< 54.6K>
54.6K>
-LPTSTB
-LPTAFD
-LPTINIT
-LPTSLIN
C495
C521
C632
C639
C678
C708
C729
C764
C766
GND

EMC FILTERS SHOULD BE PLACED NEAR CONNECTOR
AND BETWEEN SIGNAL AND CONNECTOR PINS.

EMC FILTERS SHOULD BE PLACED NEAR CONNECTOR
AND BETWEEN SIGNAL AND CONNECTOR PINS.

DESIGNER	Y.I	11/21/03
CHECKED	Y.Y	11/21/03
APPROVED	K.T	11/21/03
CLASS	K.T	11/21/03

PART NO. 13R1088

TITLE ROME-1 RWK(V099)

PARALLEL PORT

IBM CONFIDENTIAL

13R1088

	DATE	EC NO.
REL	11/21/03	J45843A

PART NO.
13R1088

DEVELOPMENT NO.

Q/M
59 /82

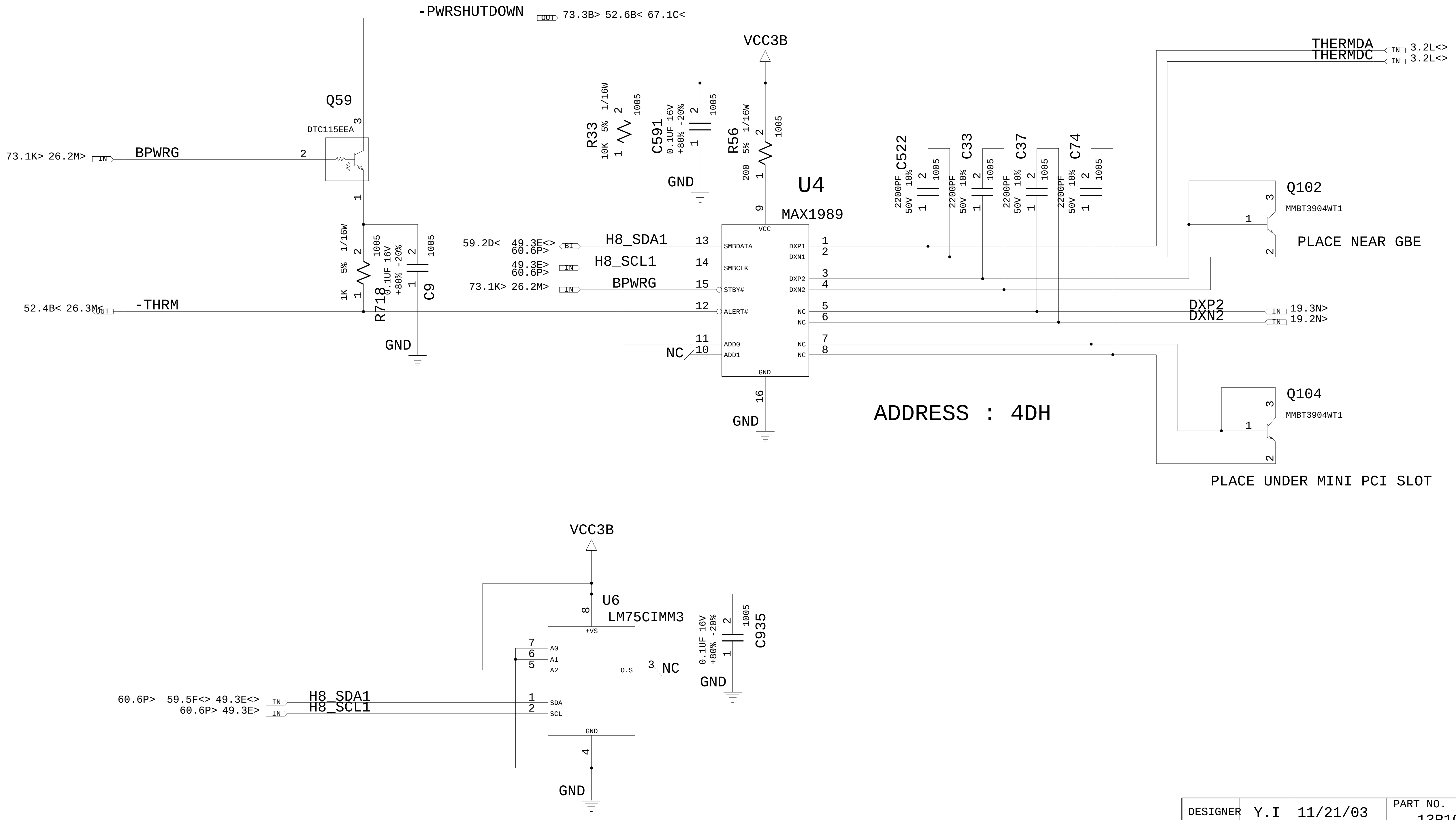
-PWRSHUTDOWN
OUT
73.3B> 52.6B< 67.1C<
Q59
DTC115EEA
3
2
1
73.1K> 26.2M>
IN
BPWRG
R718
1K 5% 1/16W
1005
2
1
C9
0.1UF 16V
+80% -20%
1005
GND
52.4B< 26.3M<
OUT
-THRM
VCC3B
R33
10K 5% 1/16W
1005
C591
0.1UF 16V
+80% -20%
1005
GND
R56
200 5% 1/16W
1005
U4
MAX1989
9
VCC
59.2D<
49.3E<>
60.6P>
BI
H8_SDA1
13
SMBDATA
49.3E>
60.6P>
IN
H8_SCL1
14
SMBCLK
73.1K> 26.2M>
IN
BPWRG
15
STBY#
12
ALERT#
11
ADD0
NC
10
ADD1
GND
16
GND
DXP1
1
DXN1
2
DXP2
3
DXN2
4
NC
5
NC
6
NC
7
NC
8
C522
2200PF 50V 10%
1005
C33
2200PF 50V 10%
1005
C37
2200PF 50V 10%
1005
C74
2200PF 50V 10%
1005
THERMDA
THERMDC
IN
3.2L<>
IN
3.2L<>
Q102
MMBT3904WT1
1
3
2
PLACE NEAR GBE
DXP2
DXN2
IN
19.3N>
IN
19.2N>
ADDRESS : 4DH
Q104
MMBT3904WT1
1
3
2
PLACE UNDER MINI PCI SLOT
VCC3B
U6
LM75CIMM3
8
+VS
7
A0
6
A1
5
A2
O.S
3
NC
60.6P> 59.5F<> 49.3E<>
IN
H8_SDA1
1
SDA
60.6P> 49.3E>
IN
H8_SCL1
2
SCL
GND
4
GND
C935
0.1UF 16V
+80% -20%
1005
2
1
GND

DESIGNER	Y.I	11/21/03
CHECKED	Y.Y	11/21/03
APPROVED	K.T	11/21/03
CLASS	K.T	11/21/03

PART NO.
13R1088

IBM

TITLE ROME-1 RWK(V099)

THERMAL SENSOR

IBM CONFIDENTIAL

	DATE	EC NO.	PART NO.
REL	11/21/03	J45843A	13R1088
			DEVELOPMENT NO.
			Q/M 60 /82

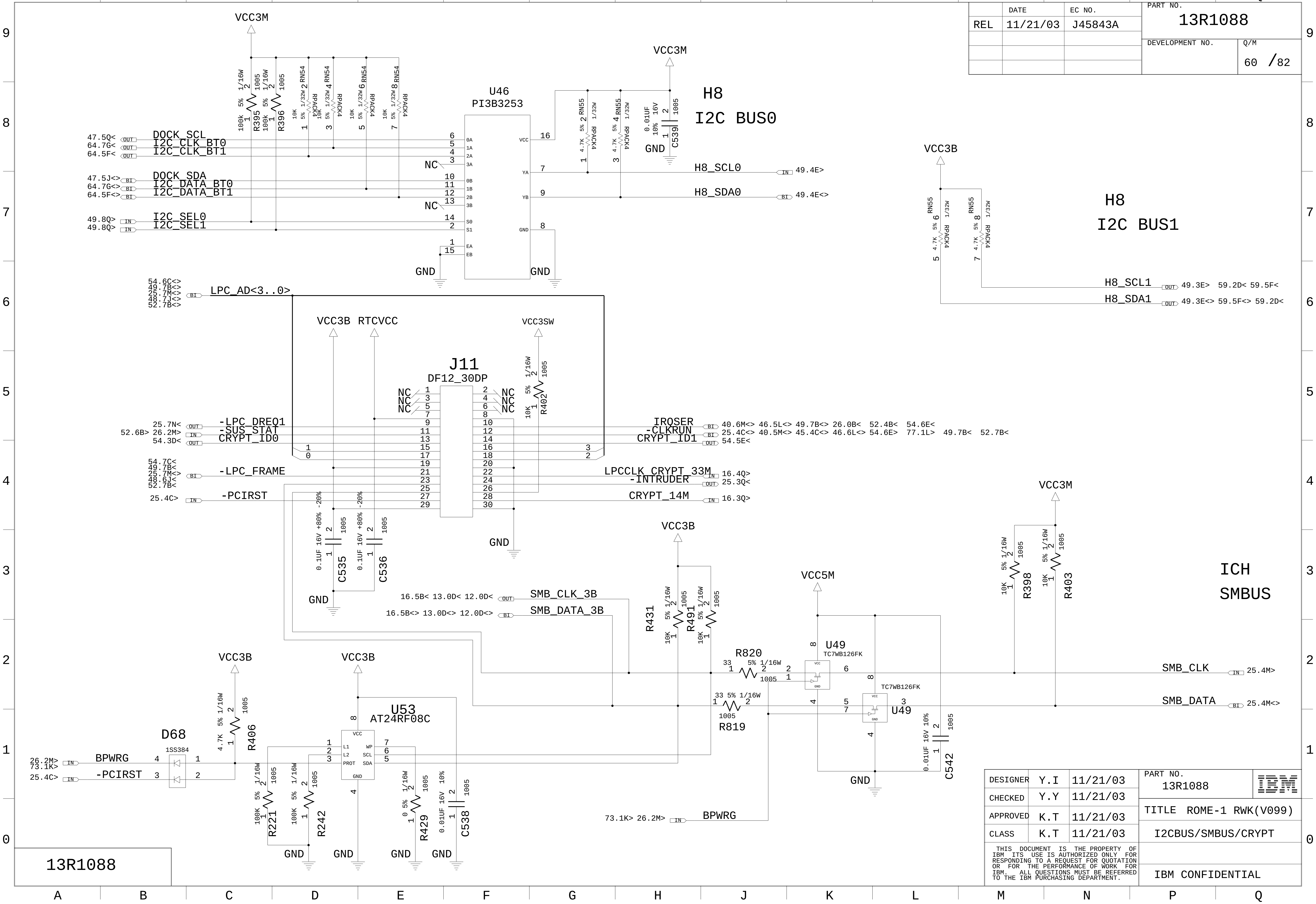
VCC3M
R395
R396
RN54
RN55
RPACK4
U46
PI3B3253
DOCK_SCL
I2C_CLK_BT0
I2C_CLK_BT1
DOCK_SDA
I2C_DATA_BT0
I2C_DATA_BT1
I2C_SEL0
I2C_SEL1
47.5Q<
64.7G<
64.5F<
47.5J<>
64.7G<>
64.5F<>
49.8Q>
49.8Q>
NC
GND
C539
0.01UF 16V 10%
H8
I2C BUS0
H8_SCL0
H8_SDA0
49.4E>
49.4E<>
VCC3B
H8
I2C BUS1
H8_SCL1
H8_SDA1
49.3E> 59.2D< 59.5F<
49.3E<> 59.5F<> 59.2D<
LPC_AD<3..0>
54.6C<>
49.7B<>
25.7M<>
48.7J<>
52.7B<>
RTCVCC
VCC3SW
J11
DF12_30DP
R402
-LPC_DREQ1
-SUS_STAT
CRYPT_ID0
25.7N<
52.6B> 26.2M>
54.3D<
IRQSER
-CLKRUN
CRYPT_ID1
40.6M<> 46.5L<> 49.7B<> 26.0B<> 52.4B< 54.6E<
25.4C<> 40.5M<> 45.4C<> 46.6L<> 54.6E> 77.1L> 49.7B< 52.7B<
54.5E<
-LPC_FRAME
-PCIRST
25.4C>
LPCCLK_CRYPT_33M
-INTRUDER
CRYPT_14M
16.4Q>
25.3Q<
16.3Q>
C535
C536
0.1UF 16V +80% -20%
SMB_CLK_3B
SMB_DATA_3B
16.5B< 13.0D< 12.0D<
16.5B<> 13.0D<> 12.0D<>
R431
R491
R820
R819
VCC5M
U49
TC7WB126FK
C542
R398
R403
ICH
SMBUS
SMB_CLK
SMB_DATA
25.4M>
25.4M<>
D68
1SS384
BPWRG
-PCIRST
26.2M>
73.1K>
25.4C>
R406
U53
AT24RF08C
R221
R242
R429
C538
73.1K> 26.2M>
BPWRG

13R1088

DESIGNER	Y.I	11/21/03	PART NO. 13R1088
CHECKED	Y.Y	11/21/03	TITLE ROME-1 RWK(V099)
APPROVED	K.T	11/21/03	I2CBUS/SMBUS/CRYPT
CLASS	K.T	11/21/03	

THIS DOCUMENT IS THE PROPERTY OF IBM ITS USE IS AUTHORIZED ONLY FOR RESPONDING TO A REQUEST FOR QUOTATION OR FOR THE PERFORMANCE OF WORK FOR IBM. ALL QUESTIONS MUST BE REFERRED TO THE IBM PURCHASING DEPARTMENT.

IBM CONFIDENTIAL

	DATE	EC NO.
REL	11/21/03	J45843A

PART NO. 13R1088

DEVELOPMENT NO.

Q/M 61 /82

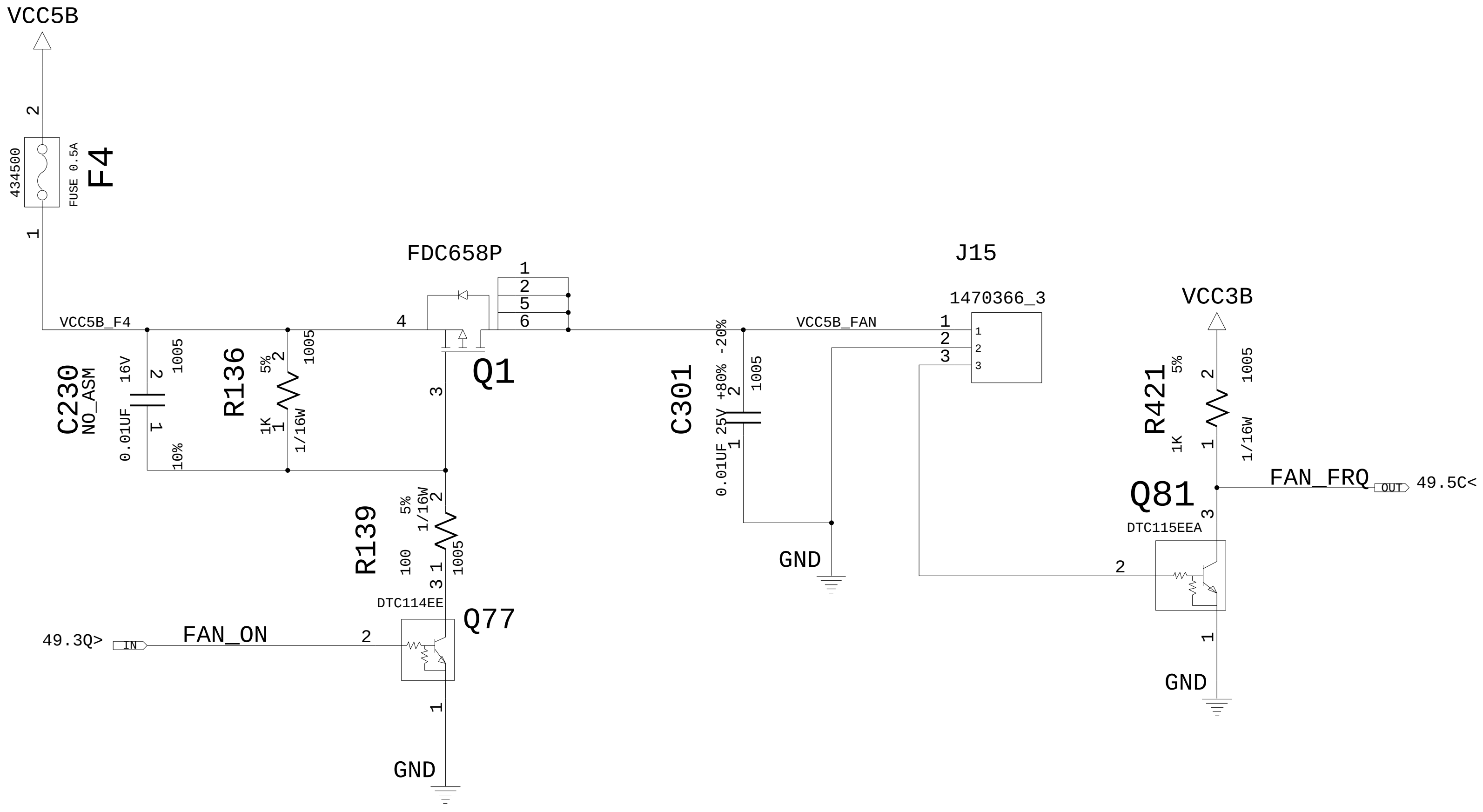
VCC5B
2
434500
FUSE 0.5A
F4
1
VCC5B_F4
C230
NO_ASM
16V
2
1005
0.01UF
1
10%
R136
5%
2
1005
1K
1
1/16W
FDC658P
4
1
2
5
6
3
Q1
R139
5%
1/16W
2
100
3 1
1005
DTC114EE
Q77
49.3Q>
IN
FAN_ON
2
1
GND
C301
0.01UF 25V +80% -20%
2
1
1005
VCC5B_FAN
GND
J15
1470366_3
1
2
3
VCC3B
R421
5%
2
1005
1K
1
1/16W
FAN_FRQ
OUT
49.5C<
Q81
3
DTC115EEA
2
1
GND

DESIGNER	Y.I	11/21/03
CHECKED	Y.Y	11/21/03
APPROVED	K.T	11/21/03
CLASS	K.T	11/21/03

PART NO. 13R1088

IBM

TITLE ROME-1 RWK(V099)

FAN CONNECTOR

IBM CONFIDENTIAL

REL	DATE 11/21/03	EC NO. J45843A

PART NO. 13R1088

DEVELOPMENT NO.

Q/M 62 /82

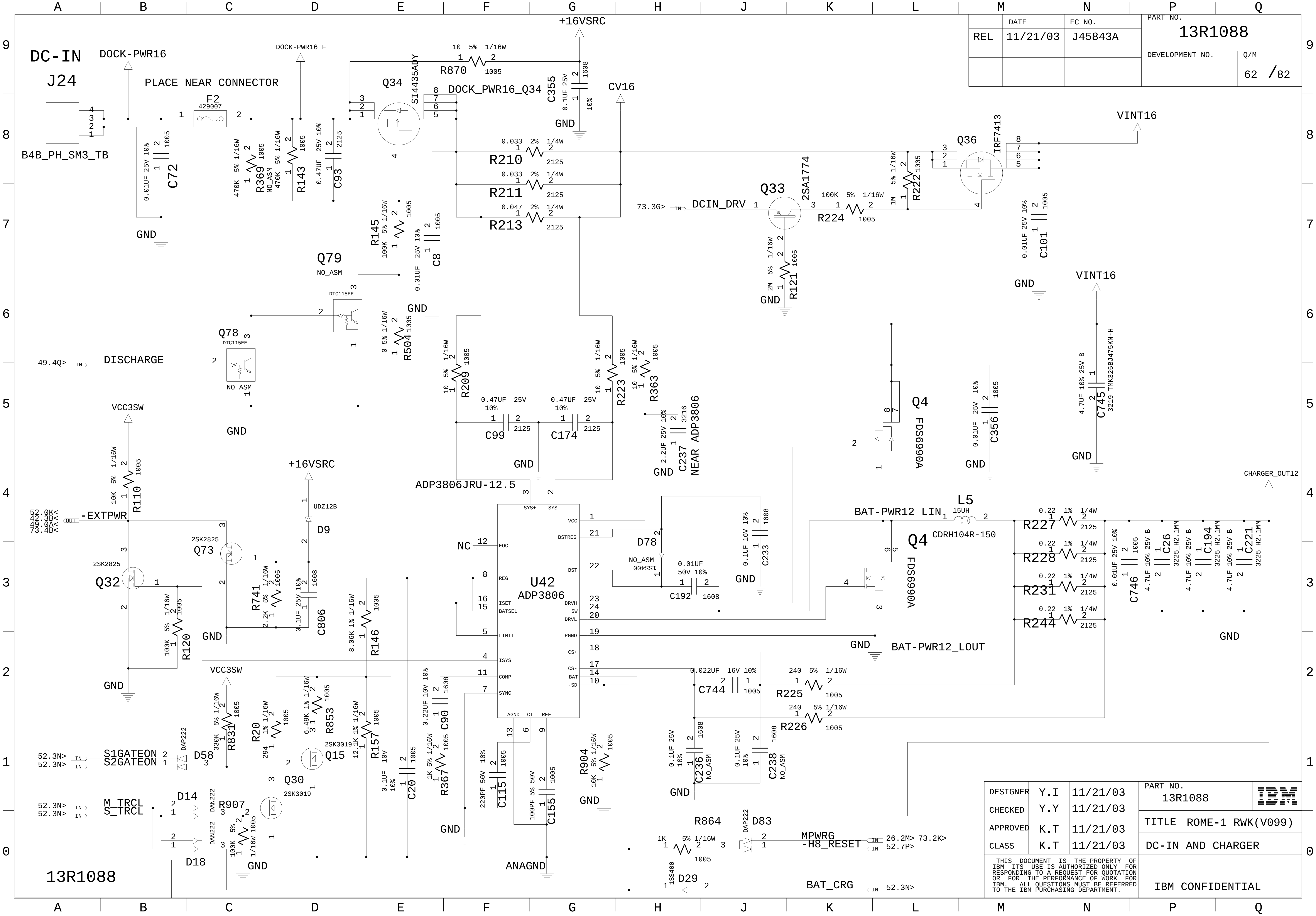

DC-IN
J24
B4B_PH_SM3_TB
DOCK-PWR16
PLACE NEAR CONNECTOR
F2 429007
DOCK-PWR16_F
Q34 SI4435ADY
DOCK_PWR16_Q34
R870 10 5% 1/16W 1005
+16VSRC
C355 0.1UF 25V 10% 1608
CV16
GND
C72 0.01UF 25V 10% 1005
R369 470K 5% 1/16W 1005 NO_ASM
R143 470K 5% 1/16W 1005
C93 0.47UF 25V 10% 2125
R210 0.033 2% 1/4W 2125
R211 0.033 2% 1/4W 2125
R213 0.047 2% 1/4W 2125
R145 100K 5% 1/16W 1005
C8 0.01UF 25V 10% 1005
Q79 NO_ASM DTC115EE
Q78 DTC115EE NO_ASM
49.4Q> DISCHARGE
R504 0 5% 1/16W 1005
R209 10 5% 1/16W 1005
C99 0.47UF 10% 25V 2125
C174 0.47UF 10% 25V 2125
R223 10 5% 1/16W 1005
R363 10 5% 1/16W 1005
C237 2.2UF 25V 10% 3216 NEAR ADP3806
ADP3806JRU-12.5
Q36 IRF7413
VINT16
73.3G> DCIN_DRV
Q33 2SA1774
R224 100K 5% 1/16W 1005
R222 1M 5% 1/16W 1005
R121 2M 5% 1/16W 1005
C101 0.01UF 25V 10% 1005
C745 4.7UF 10% 25V B 3219 TMK325BJ475KN-H
C356 0.01UF 25V 10% 1005
Q4 FDS6990A
VCC3SW
R110 10K 5% 1/16W 1005
52.0K< 42.3B< 49.0A< 73.4B< -EXTPWR
Q32 2SK2825
Q73 2SK2825
D9 UDZ12B
R741 2.2K 5% 1/16W 1005
C806 0.1UF 25V 10% 1608
R120 100K 5% 1/16W 1005
R146 8.06K 1% 1/16W 1005
U42 ADP3806
SYS+ SYS- VCC BSTREG BST DRVH SW DRVL PGND CS+ CS- BAT -SD EOC REG ISET BATSEL LIMIT ISYS COMP SYNC AGND CT REF
NC
D78 1SS400 NO_ASM
C192 0.01UF 50V 10% 1608
C233 0.1UF 16V 10% 1608
BAT-PWR12_LIN
L5 15UH CDRH104R-150
BAT-PWR12_LOUT
CHARGER_OUT12
R227 0.22 1% 1/4W 2125
R228 0.22 1% 1/4W 2125
R231 0.22 1% 1/4W 2125
R244 0.22 1% 1/4W 2125
C746 0.01UF 25V 10% 1005
C26 4.7UF 10% 25V B 3225_H2.1MM
C194 4.7UF 10% 25V B 3225_H2.1MM
C221 4.7UF 10% 25V B 3225_H2.1MM
C744 0.022UF 16V 10% 1005
R225 240 5% 1/16W 1005
R226 240 5% 1/16W 1005
C236 0.1UF 25V 10% 1608 NO_ASM
C238 0.1UF 25V 10% 1608 NO_ASM
R831 330K 5% 1/16W 1005
R20 294 1% 1/16W 1005
R853 6.49K 1% 1/16W 1005
R157 12.1K 1% 1/16W 1005
Q15 2SK3019
Q30 2SK3019
D58 DAP222
52.3N> S1GATEON
52.3N> S2GATEON
C20 0.1UF 10V 10% 1005
C90 0.22UF 10V 10% 1608
R367 1K 5% 1/16W 1005
C115 220PF 50V 10% 1005
C155 100PF 5% 50V 1005
R904 10K 5% 1/16W 1005
D14 DAN222
D18 DAN222
52.3N> M_TRCL
52.3N> S_TRCL
R907 100K 5% 1/16W 1005
ANAGND
R864 1K 5% 1/16W 1005
D83 DAP222
MPWRG 26.2M> 73.2K>
-H8_RESET 52.7P>
D29 1SS400
BAT_CRG 52.3N>

13R1088

DESIGNER	Y.I	11/21/03
CHECKED	Y.Y	11/21/03
APPROVED	K.T	11/21/03
CLASS	K.T	11/21/03

PART NO. 13R1088

IBM

TITLE ROME-1 RWK(V099)

DC-IN AND CHARGER

THIS DOCUMENT IS THE PROPERTY OF IBM ITS USE IS AUTHORIZED ONLY FOR RESPONDING TO A REQUEST FOR QUOTATION OR FOR THE PERFORMANCE OF WORK FOR IBM. ALL QUESTIONS MUST BE REFERRED TO THE IBM PURCHASING DEPARTMENT.

IBM CONFIDENTIAL

	DATE	EC NO.
REL	11/21/03	J45843A

PART NO. 13R1088

DEVELOPMENT NO.

Q/M 63 /82

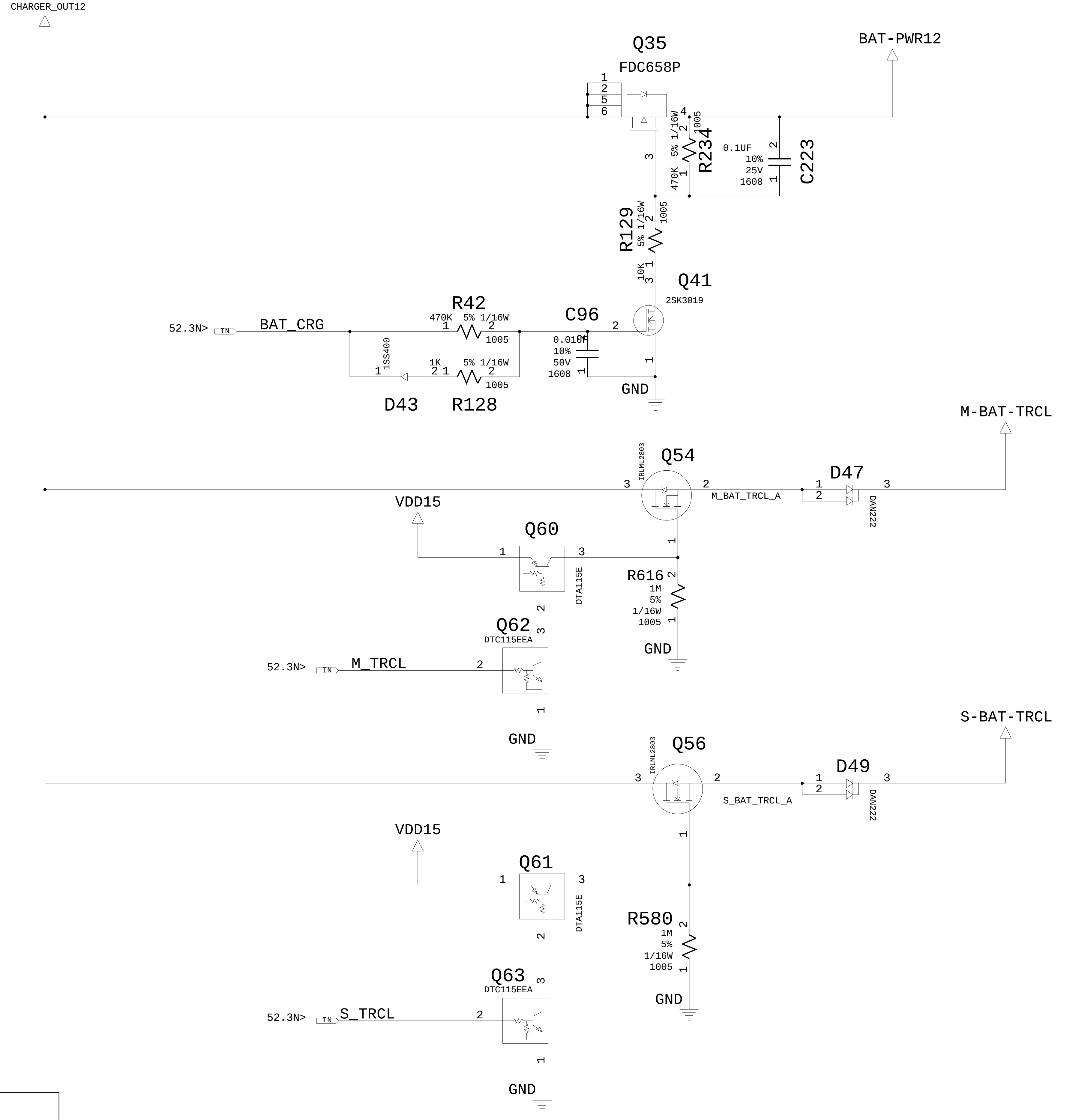
CHARGER_OUT12
Q35
FDC658P
1
2
5
6
4
3
BAT-PWR12
R234
470K
5% 1/16W
1005
C223
0.1UF
10%
25V
1608
R129
10K
5% 1/16W
1005
Q41
2SK3019
52.3N>
IN
BAT_CRG
R42
470K 5% 1/16W
1005
C96
0.010UF
10%
50V
1608
GND
1SS400
D43
R128
1K 5% 1/16W
1005
M-BAT-TRCL
Q54
IRLML2803
D47
M_BAT_TRCL_A
DAN222
VDD15
Q60
DTA115E
R616
1M
5%
1/16W
1005
GND
Q62
DTC115EEA
52.3N>
IN
M_TRCL
GND
S-BAT-TRCL
Q56
IRLML2803
D49
S_BAT_TRCL_A
DAN222
VDD15
Q61
DTA115E
R580
1M
5%
1/16W
1005
GND
Q63
DTC115EEA
52.3N>
IN
S_TRCL
GND

13R1088

DESIGNER	Y.I	11/21/03
CHECKED	Y.Y	11/21/03
APPROVED	K.T	11/21/03
CLASS	K.T	11/21/03

PART NO. 13R1088

TITLE ROME-1 RWK(V099)

CHARGE SELECTOR

IBM CONFIDENTIAL

	DATE	EC NO.	PART NO.
REL	11/21/03	J45843A	13R1088
			DEVELOPMENT NO.
			Q/M 64 /82

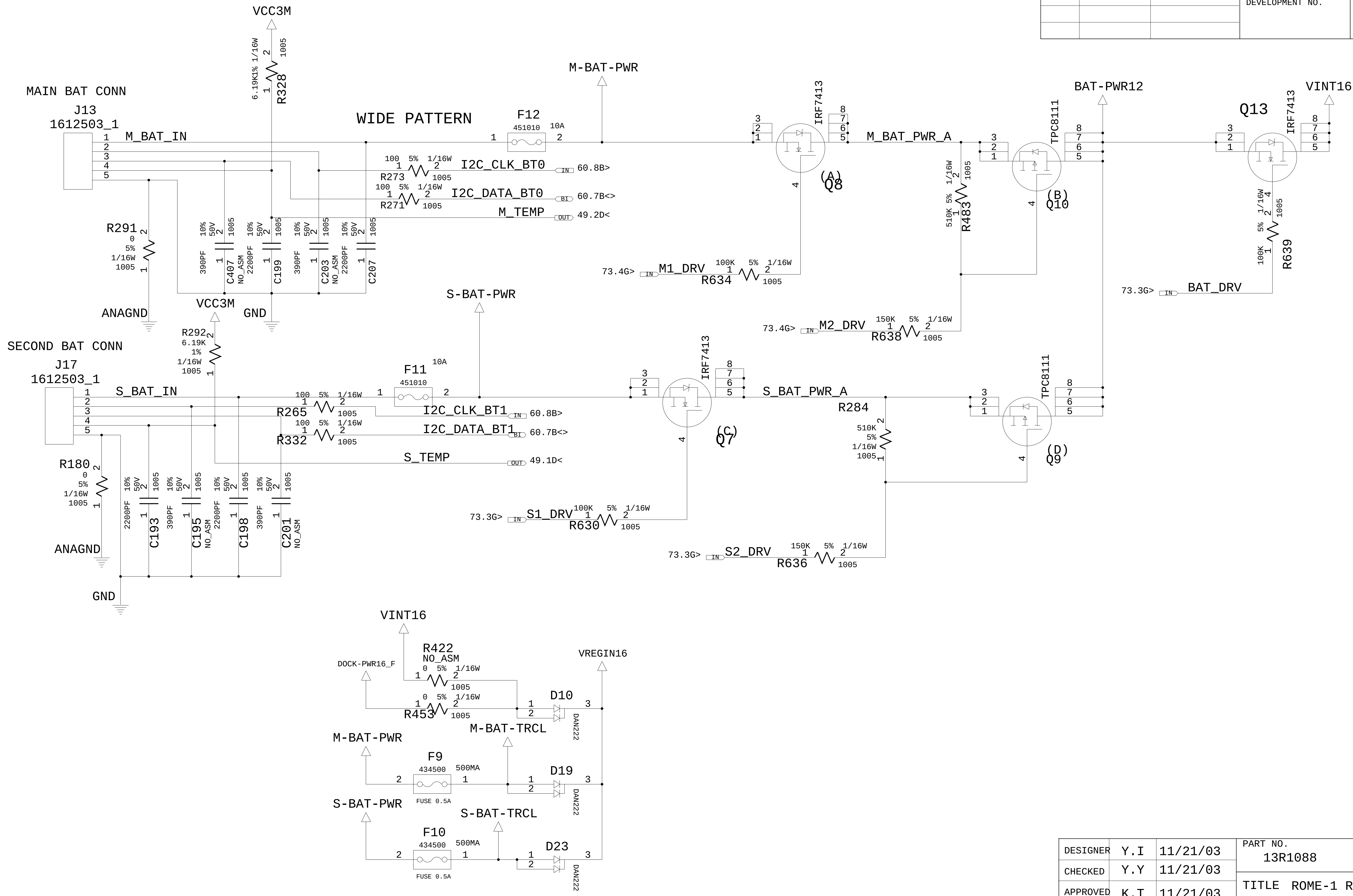
VCC3M
R328
6.19K1% 1/16W
1005
M-BAT-PWR
MAIN BAT CONN
J13
1612503_1
M_BAT_IN
WIDE PATTERN
F12
451010
10A
IRF7413
Q8
(A)
M_BAT_PWR_A
TPC8111
Q10
(B)
BAT-PWR12
VINT16
Q13
IRF7413
R273
100 5% 1/16W
I2C_CLK_BT0
60.8B>
R271
I2C_DATA_BT0
60.7B<>
M_TEMP
49.2D<
R291
0 5% 1/16W 1005
ANAGND
GND
C407
C199
C203
C207
390PF
2200PF
NO_ASM
10% 50V
R483
510K 5% 1/16W 1005
R639
100K 5% 1/16W 1005
73.4G> M1_DRV
R634
100K 5% 1/16W 1005
73.4G> M2_DRV
R638
150K 5% 1/16W 1005
73.3G> BAT_DRV
S-BAT-PWR
VCC3M
R292
6.19K 1% 1/16W 1005
SECOND BAT CONN
J17
1612503_1
S_BAT_IN
F11
451010
10A
R265
I2C_CLK_BT1
60.8B>
R332
I2C_DATA_BT1
60.7B<>
S_TEMP
49.1D<
IRF7413
Q7
(C)
S_BAT_PWR_A
R284
510K 5% 1/16W 1005
TPC8111
Q9
(D)
R180
0 5% 1/16W 1005
ANAGND
C193
C195
C198
C201
GND
73.3G> S1_DRV
R630
100K 5% 1/16W 1005
73.3G> S2_DRV
R636
150K 5% 1/16W 1005
VINT16
R422
NO_ASM
0 5% 1/16W 1005
DOCK-PWR16_F
R453
0 5% 1/16W 1005
D10
VREGIN16
DAN222
M-BAT-PWR
F9
434500
500MA
FUSE 0.5A
M-BAT-TRCL
D19
DAN222
S-BAT-PWR
F10
434500
500MA
FUSE 0.5A
S-BAT-TRCL
D23
DAN222

DESIGNER	Y.I	11/21/03	PART NO. 13R1088
CHECKED	Y.Y	11/21/03	
APPROVED	K.T	11/21/03	TITLE ROME-1 RWK(V099)
CLASS	K.T	11/21/03	BATTERY INPUT

IBM

THIS DOCUMENT IS THE PROPERTY OF IBM ITS USE IS AUTHORIZED ONLY FOR RESPONDING TO A REQUEST FOR QUOTATION OR FOR THE PERFORMANCE OF WORK FOR IBM. ALL QUESTIONS MUST BE REFERRED TO THE IBM PURCHASING DEPARTMENT.

IBM CONFIDENTIAL

	DATE	EC NO.
REL	11/21/03	J45843A

PART NO. 13R1088

DEVELOPMENT NO.

Q/M 65 /82

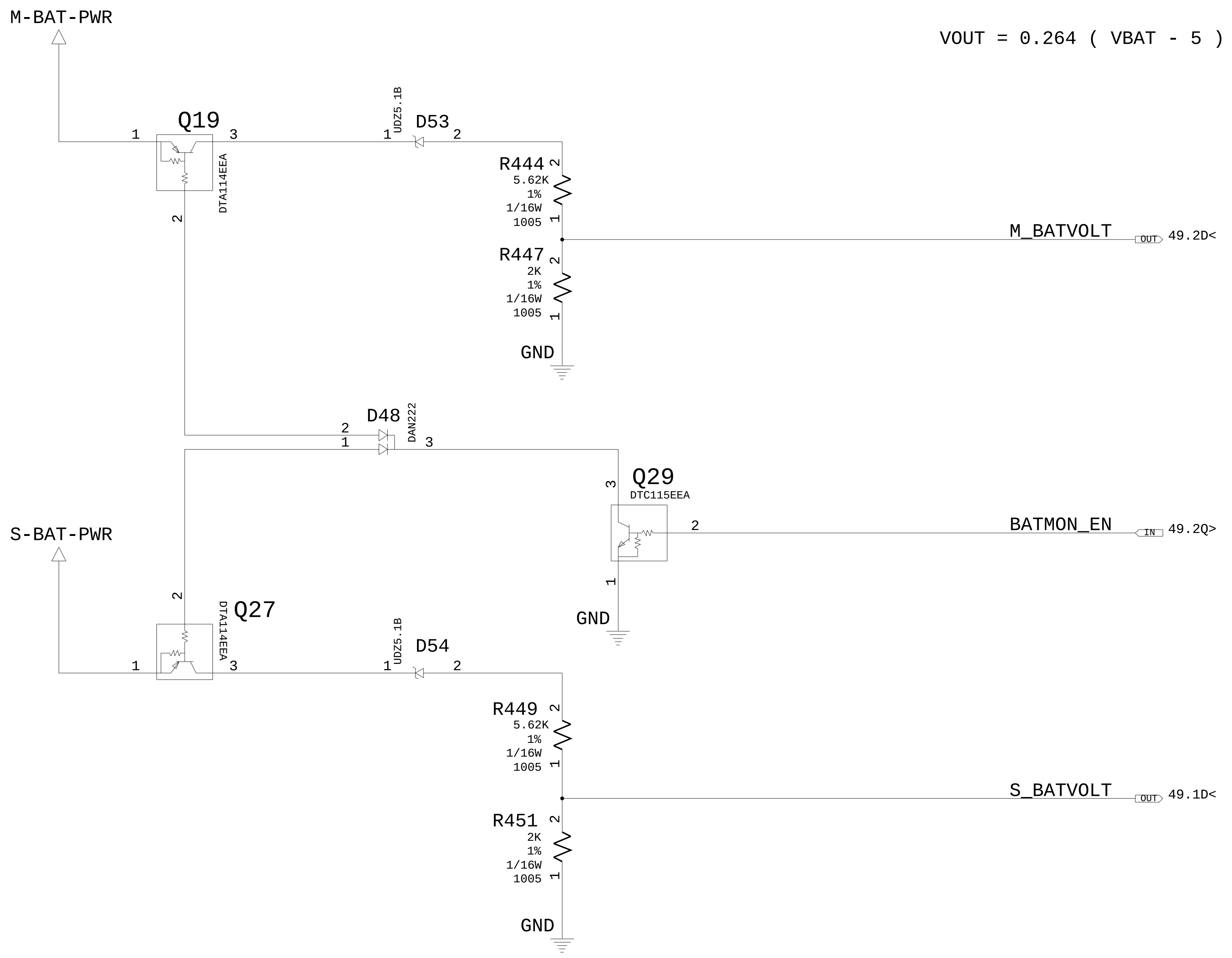
M-BAT-PWR
Q19
DTA114EEA
1
2
3
D53
UDZ5.1B
1
2
R444
5.62K
1%
1/16W
1005
M_BATVOLT
OUT
49.2D<
R447
2K
1%
1/16W
1005
GND
D48
DAN222
2
1
3
Q29
DTC115EEA
BATMON_EN
IN
49.2Q>
GND
S-BAT-PWR
Q27
DTA114EEA
D54
UDZ5.1B
R449
5.62K
1%
1/16W
1005
S_BATVOLT
OUT
49.1D<
R451
2K
1%
1/16W
1005
GND

VOUT = 0.264 (VBAT - 5)

DESIGNER	Y.I	11/21/03
CHECKED	Y.Y	11/21/03
APPROVED	K.T	11/21/03
CLASS	K.T	11/21/03

PART NO. 13R1088

IBM

TITLE ROME-1 RWK(V099)

BATTERY MONITOR

THIS DOCUMENT IS THE PROPERTY OF IBM ITS USE IS AUTHORIZED ONLY FOR RESPONDING TO A REQUEST FOR QUOTATION OR FOR THE PERFORMANCE OF WORK FOR IBM. ALL QUESTIONS MUST BE REFERRED TO THE IBM PURCHASING DEPARTMENT.

IBM CONFIDENTIAL

13R1088

	DATE	EC NO.
REL	11/21/03	J45843A

PART NO.
13R1088

DEVELOPMENT NO.

Q/M
66 /82

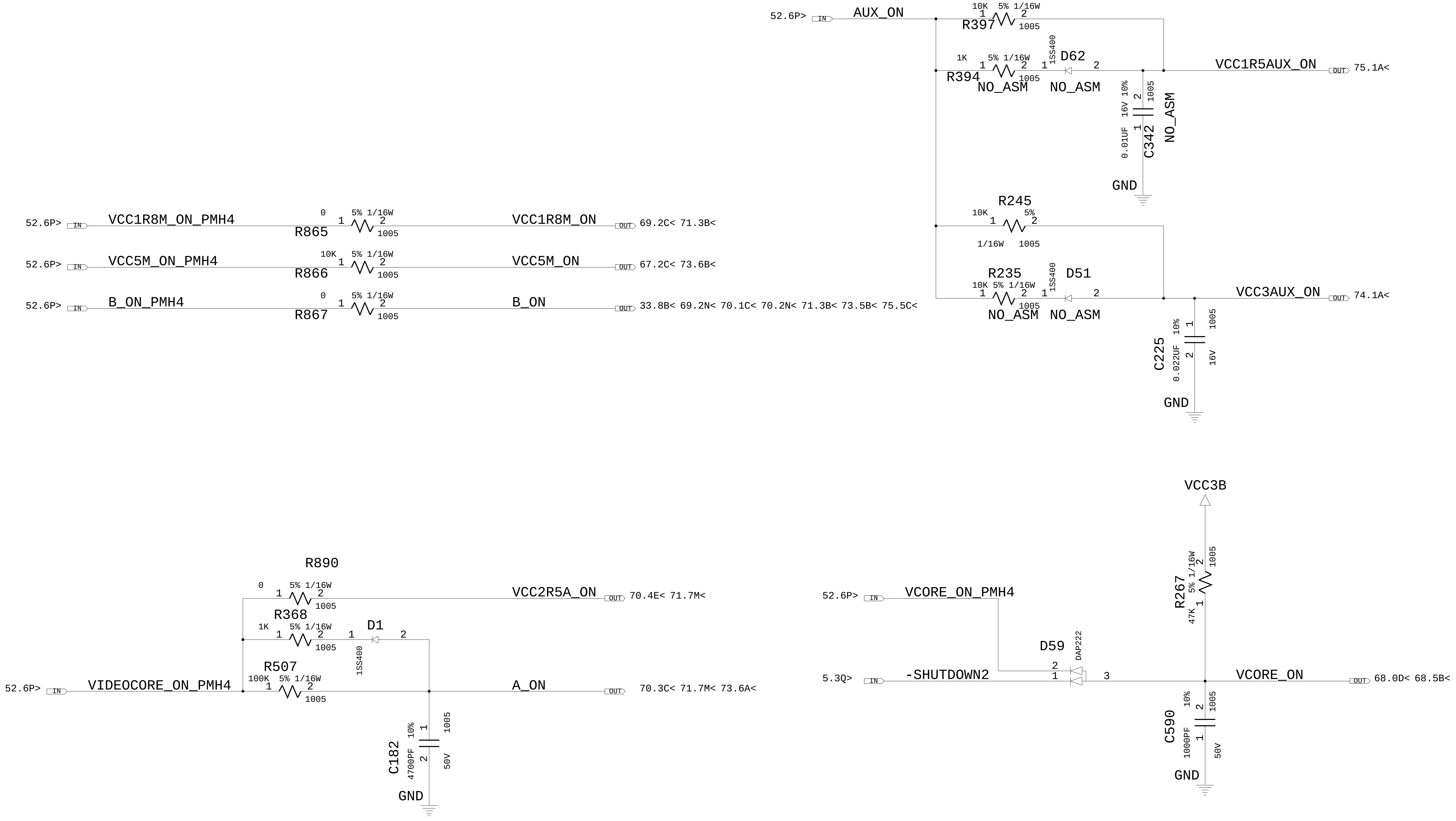
52.6P> IN AUX_ON
10K 5% 1/16W R397 1005
1K 5% 1/16W R394 1005 NO_ASM
1SS400 D62 NO_ASM
VCC1R5AUX_ON OUT 75.1A<
0.01UF 16V 10% C342 1005 NO_ASM
GND
R245 10K 5% 1/16W 1005
R235 10K 5% 1/16W 1005 NO_ASM
1SS400 D51 NO_ASM
VCC3AUX_ON OUT 74.1A<
C225 0.022UF 10% 16V 1005
GND
52.6P> IN VCC1R8M_ON_PMH4
0 5% 1/16W R865 1005
VCC1R8M_ON OUT 69.2C< 71.3B<
52.6P> IN VCC5M_ON_PMH4
10K 5% 1/16W R866 1005
VCC5M_ON OUT 67.2C< 73.6B<
52.6P> IN B_ON_PMH4
0 5% 1/16W R867 1005
B_ON OUT 33.8B< 69.2N< 70.1C< 70.2N< 71.3B< 73.5B< 75.5C<
R890 0 5% 1/16W 1005
VCC2R5A_ON OUT 70.4E< 71.7M<
R368 1K 5% 1/16W 1005
D1 1SS400
R507 100K 5% 1/16W 1005
52.6P> IN VIDEOCORE_ON_PMH4
A_ON OUT 70.3C< 71.7M< 73.6A<
C182 4700PF 10% 50V 1005
GND
VCC3B
R267 47K 5% 1/16W 1005
52.6P> IN VCORE_ON_PMH4
D59 DAP222
5.3Q> IN -SHUTDOWN2
VCORE_ON OUT 68.0D< 68.5B<
C590 1000PF 10% 50V 1005
GND

13R1088

DESIGNER	Y.I	11/21/03
CHECKED	Y.Y	11/21/03
APPROVED	K.T	11/21/03
CLASS	K.T	11/21/03

PART NO.
13R1088

TITLE ROME-1 RWK(V099)

POWER SEQUENCE

IBM CONFIDENTIAL

REL	DATE	EC NO.
REL	11/21/03	J45843A

PART NO. 13R1088

DEVELOPMENT NO.

Q/M 67 /82

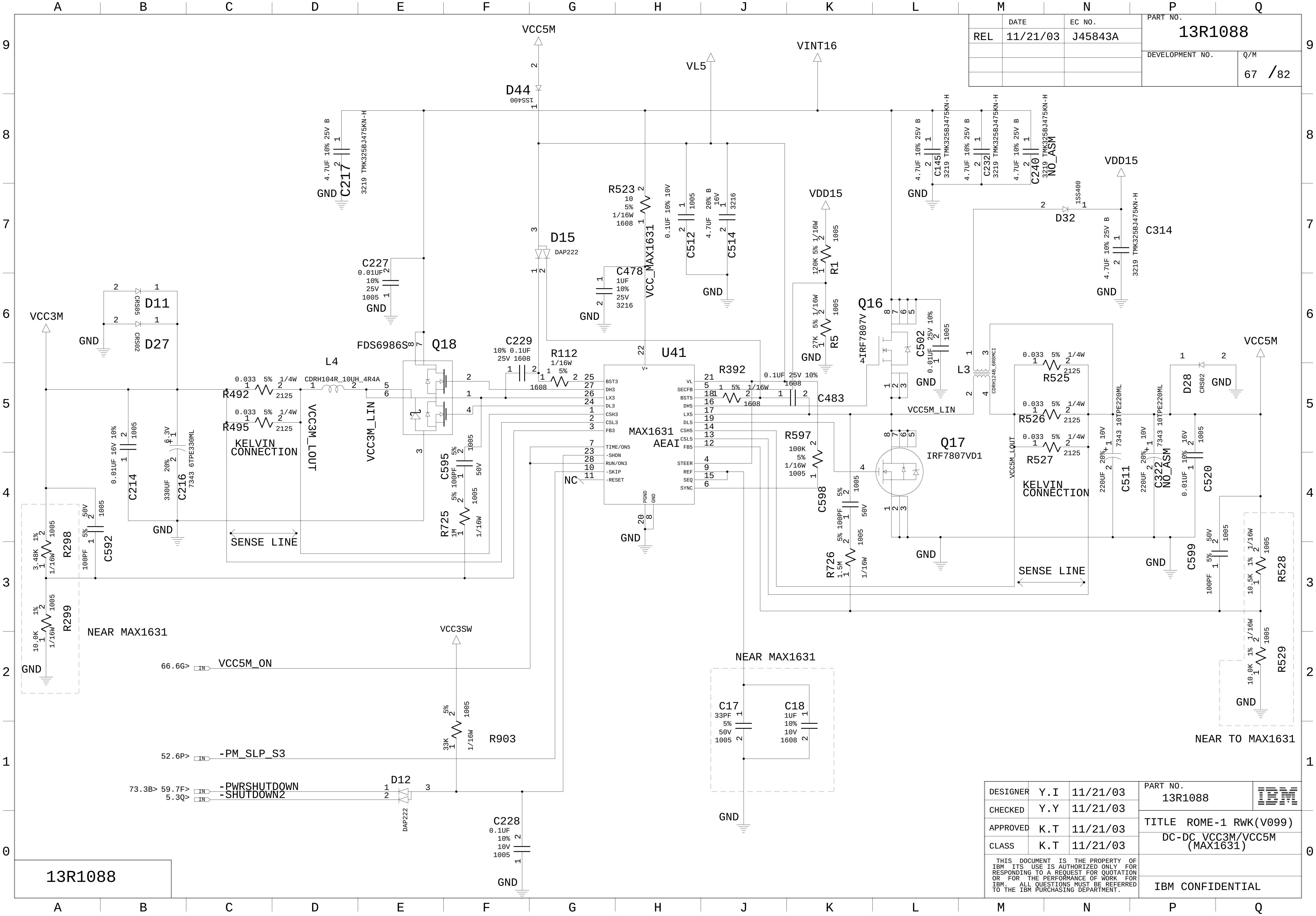

VCC5M
VINT16
VL5
D44
1SS400
C217
4.7UF 10% 25V B
3219 TMK325BJ475KN-H
GND
R523
10
5%
1/16W
1608
VCC_MAX1631
C512
0.1UF 10% 10V
1005
C514
4.7UF 20% B 16V
3216
VDD15
R1
120K 5% 1/16W
R5
27K 5% 1/16W
C145
C232
C240
NO_ASM
VDD15
D32
1SS400
C314
D15
DAP222
C227
0.01UF
10%
25V
1005
C478
1UF
10%
25V
3216
D11
CRS05
D27
CRS02
VCC3M
FDS6986S
Q18
L4
CDRH104R_10UH_4R4A
C229
10% 0.1UF
25V 1608
R112
1/16W
5%
U41
MAX1631
AEAI
BST3
DH3
LX3
DL3
CSH3
CSL3
FB3
TIME/ON5
-SHDN
RUN/ON3
-SKIP
-RESET
VL
SECFB
BST5
DH5
LX5
DL5
CSH5
CSL5
FB5
STEER
REF
SEQ
SYNC
PGND
GND
NC
R392
C483
0.1UF 25V 10%
1608
Q16
IRF7807V
C502
0.01UF 25V 10%
L3
CDRH124B_6R8MCI
VCC5M_LIN
R525
R526
R527
0.033 5% 1/4W
2125
D28
CRS02
VCC5M
R492
R495
0.033 5% 1/4W
2125
KELVIN
CONNECTION
VCC3M_LOUT
VCC3M_LIN
C214
0.01UF 16V 10%
C216
330UF 20% 6.3V
7343 6TPE330ML
C595
5% 100PF 50V
R725
1M 5% 1/16W
R597
100K 5% 1/16W
C598
5% 100PF 50V
R726
1.5M 5% 1/16W
Q17
IRF7807VD1
C511
220UF 20% 10V
7343 10TPE220ML
C322
NO_ASM
C520
0.01UF 10% 16V
VCC5M_LOUT
KELVIN
CONNECTION
SENSE LINE
SENSE LINE
C592
100PF 5% 50V
R298
3.48K 1% 1/16W
R299
10.0K 1% 1/16W
NEAR MAX1631
C599
100PF 5% 50V
R528
10.5K 1% 1/16W
R529
10.0K 1% 1/16W
NEAR TO MAX1631
VCC3SW
66.6G> IN VCC5M_ON
52.6P> IN -PM_SLP_S3
73.3B> 59.7F> IN -PWRSHUTDOWN
5.3Q> IN -SHUTDOWN2
R903
33K 5% 1/16W
D12
DAP222
C228
0.1UF
10%
10V
1005
NEAR MAX1631
C17
33PF
5%
50V
1005
C18
1UF
10%
10V
1608

DESIGNER	Y.I	11/21/03
CHECKED	Y.Y	11/21/03
APPROVED	K.T	11/21/03
CLASS	K.T	11/21/03

PART NO. 13R1088

IBM

TITLE ROME-1 RWK(V099)

DC-DC VCC3M/VCC5M
(MAX1631)

IBM CONFIDENTIAL

REL	DATE	EC NO.	PART NO.
REL	11/21/03	J45843A	13R1088

DEVELOPMENT NO.

Q/M 68 /82

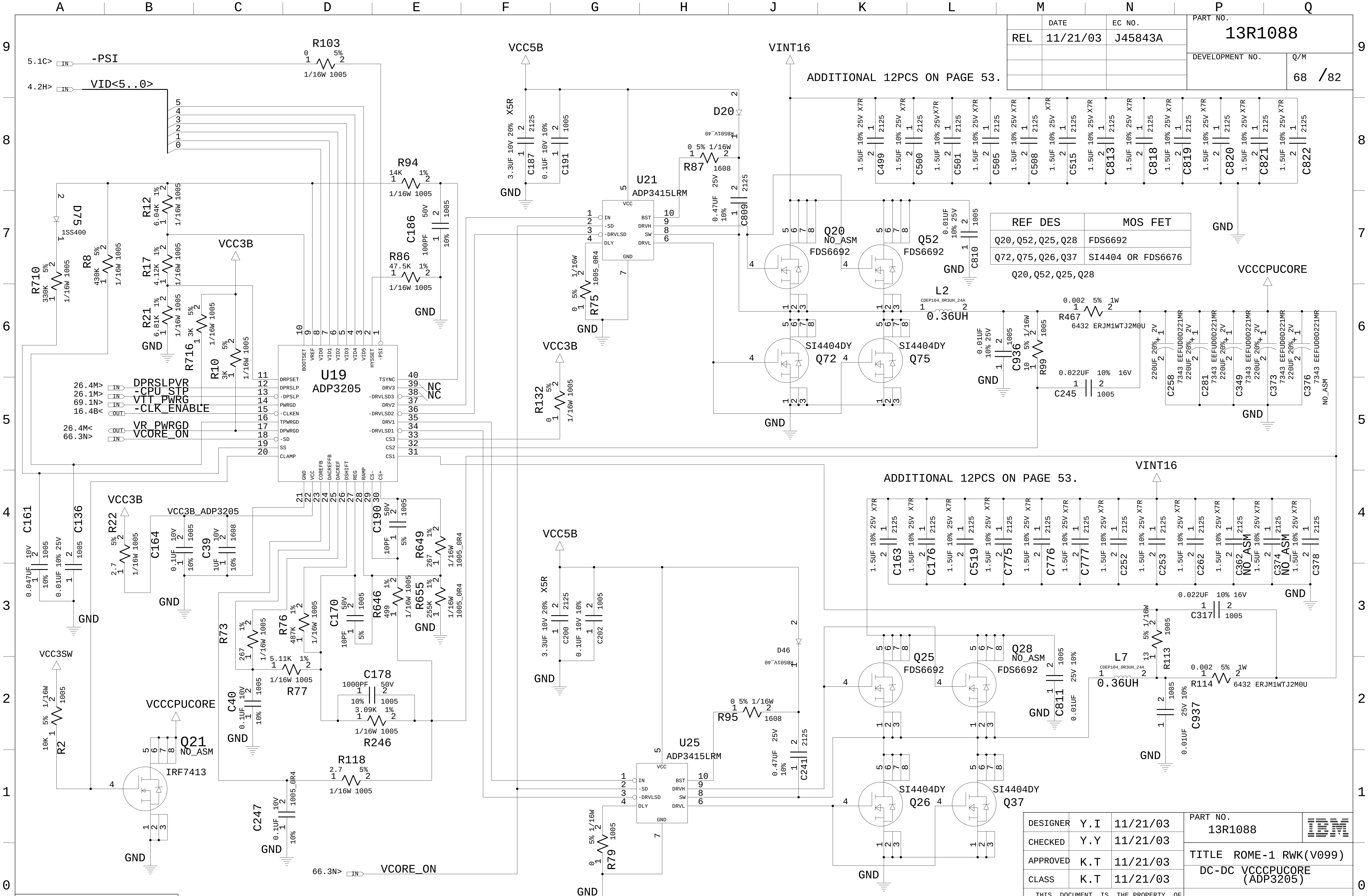

A B C D E F G H J K L M N P Q
9 8 7 6 5 4 3 2 1 0
5.1C> IN -PSI
4.2H> IN VID<5..0>
R103 0 5% 1/16W 1005
ADDITIONAL 12PCS ON PAGE 53.
VCC5B
VINT16
VCC3B
VCCCPUCORE
VCC3SW
GND
U19 ADP3205
U21 ADP3415LRM
U25 ADP3415LRM
BOOTSET VREF VID0 VID1 VID2 VID3 VID4 VID5 HYSSET -PSI
DRPSET DRPSLP -DPSLP PWRGD -CLKEN TPWRGD DPWRGD -SD SS CLAMP
TSYNC DRV3 -DRVLSD3 DRV2 -DRVLSD2 DRV1 -DRVLSD1 CS3 CS2 CS1
GND VCC COREFB DACREF DSHIFT REG RAMP CS- CS+
26.4M> IN DPRSLPVR
26.1M> IN -CPU_STP
69.1N> IN VTT_PWRG
16.4B< OUT -CLK_ENABLE
26.4M< OUT VR_PWRGD
66.3N> IN VCORE_ON
66.3N> IN VCORE_ON
NC
NC
IN -SD -DRVLSD DLY VCC BST DRVH SW DRVL GND
R94 14K 1% 1/16W 1005
C186 50V 100PF 10% 1005
R86 47.5K 1% 1/16W 1005
R12 6.04K 1% 1/16W 1005
R17 4.12K 1% 1/16W 1005
R21 6.81K 1% 1/16W 1005
R716 3K 5% 1/16W 1005
R10 3K 5% 1/16W 1005
R8 430K 5% 1/16W 1005
R710 330K 5% 1/16W 1005
D75 1SS400
C187 3.3UF 10V 20% X5R 2125
C191 0.1UF 10V 10% 1005
C200 3.3UF 10V 20% X5R 2125
C202 0.1UF 10V 10% 1005
D20 RB501V_40
D46 RB501V_40
R87 0 5% 1/16W 1608
R95 0 5% 1/16W 1608
C809 0.47UF 25V 10% 2125
C241 0.47UF 25V 10% 2125
R75 0 5% 1/16W 1005_0R4
R79 0 5% 1/16W 1005
R132 0 5% 1/16W 1005
Q20 NO_ASM FDS6692
Q52 FDS6692
Q72 SI4404DY
Q75 SI4404DY
Q25 FDS6692
Q28 NO_ASM FDS6692
Q26 SI4404DY
Q37 SI4404DY
Q21 NO_ASM IRF7413
C810 0.01UF 25V 10% 1005
C811 0.01UF 25V 10% 1005
L2 CDEP104_0R3UH_24A 0.36UH
L7 CDEP104_0R3UH_24A 0.36UH
R467 0.002 5% 1W 6432 ERJM1WTJ2M0U
R114 0.002 5% 1W 6432 ERJM1WTJ2M0U
C936 0.01UF 10% 25V 1005
R99 10 5% 1/16W 1005
R113 13 5% 1/16W 1005
C937 0.01UF 25V 10% 1005
C245 0.022UF 10% 16V 1005
C317 0.022UF 10% 16V 1005
C258 C281 C349 C373 C376 220UF 20% 2V 7343 EEFUD0D221MR
NO_ASM
C499 C500 C501 C505 C508 C515 C813 C818 C819 C820 C821 C822 1.5UF 10% 25V X7R 2125
C163 C176 C519 C775 C776 C777 C252 C253 C262 C362 C374 C378 1.5UF 10% 25V X7R 2125
NO_ASM
C161 0.047UF 10V 10% 1005
C136 0.01UF 10% 25V 1005
R22 2.7 5% 1/16W 1005
VCC3B_ADP3205
C164 0.1UF 10V 10% 1005
C39 1UF 10V 10% 1608
C190 10PF 50V 5% 1005
R649 267 1% 1/16W 1005_0R4
R646 499 1% 1/16W 1005
R655 255K 1% 1/16W 1005_0R4
C170 10PF 50V 5% 1005
R73 267 1% 1/16W 1005
R76 487K 1% 1/16W 1005
R77 5.11K 1% 1/16W 1005
C178 1000PF 50V 10% 1005
R246 3.09K 1% 1/16W 1005
C40 0.1UF 10V 10% 1005
R118 2.7 5% 1/16W 1005
C247 0.1UF 10V 10% 1005_0R4
R2 10K 5% 1/16W 1005

REF DES	MOS FET
Q20,Q52,Q25,Q28	FDS6692
Q72,Q75,Q26,Q37	SI4404 OR FDS6676

Q20,Q52,Q25,Q28

13R1088

DESIGNER	Y.I	11/21/03
CHECKED	Y.Y	11/21/03
APPROVED	K.T	11/21/03
CLASS	K.T	11/21/03

PART NO.
13R1088

IBM

TITLE ROME-1 RWK(V099)
DC-DC VCCCPUCORE
(ADP3205)

THIS DOCUMENT IS THE PROPERTY OF IBM ITS USE IS AUTHORIZED ONLY FOR RESPONDING TO A REQUEST FOR QUOTATION OR FOR THE PERFORMANCE OF WORK FOR IBM. ALL QUESTIONS MUST BE REFERRED TO THE IBM PURCHASING DEPARTMENT.

IBM CONFIDENTIAL

REL	DATE	EC NO.
REL	11/21/03	J45843A

PART NO. 13R1088

DEVELOPMENT NO.

Q/M 69 /82

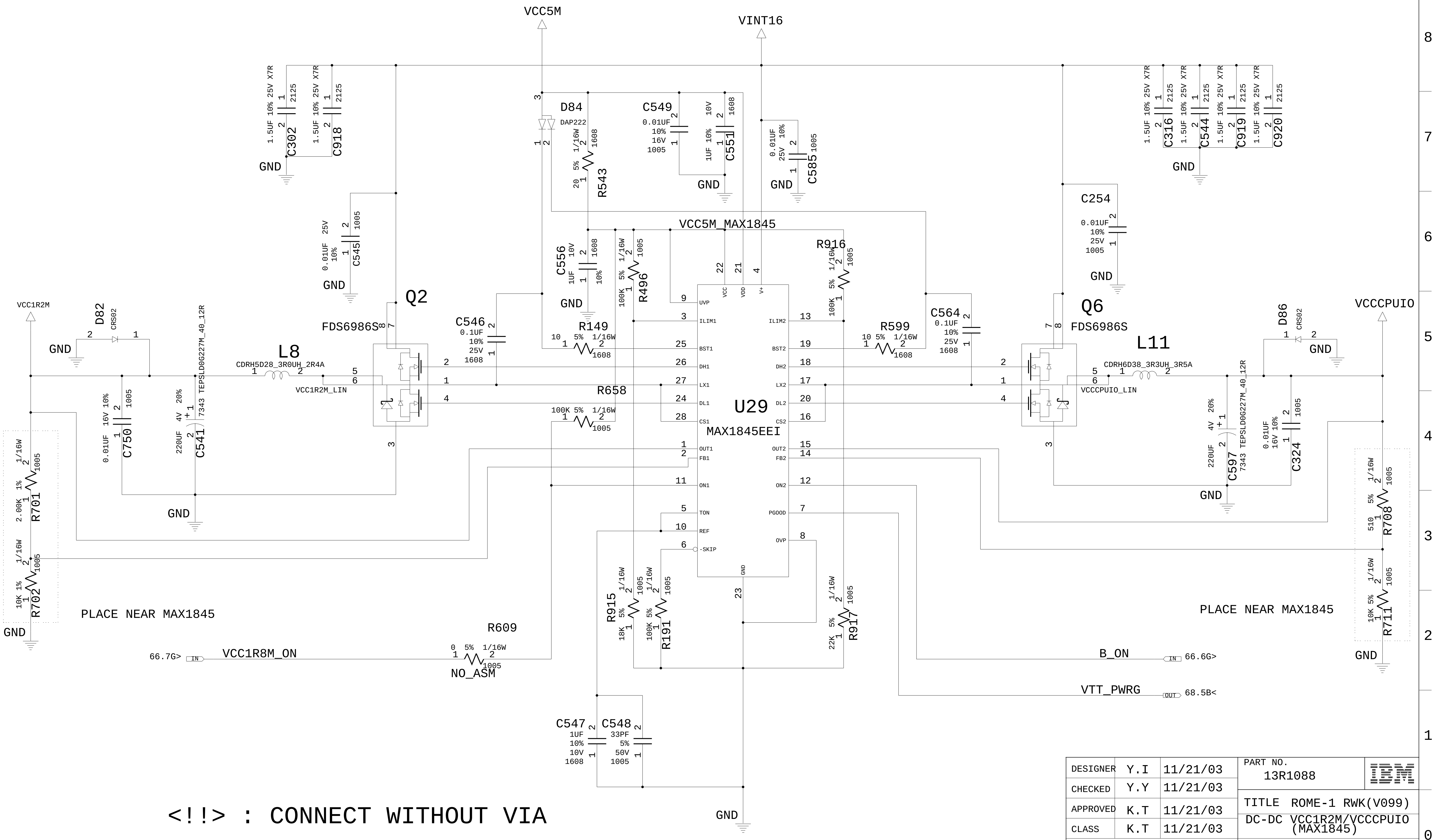

VCC5M
VINT16
VCC5M_MAX1845
VCC1R2M
VCCCPUIO
U29
MAX1845EEI
Q2
FDS6986S
Q6
FDS6986S
L8
CDRH5D28_3R0UH_2R4A
L11
CDRH6D38_3R3UH_3R5A
VCC1R2M_LIN
VCCCPUIO_LIN
D82 CRS02
D84 DAP222
D86 CRS02
C302 1.5UF 10% 25V X7R 2125
C918 1.5UF 10% 25V X7R 2125
C316 1.5UF 10% 25V X7R 2125
C544 1.5UF 10% 25V X7R 2125
C919 1.5UF 10% 25V X7R 2125
C920 1.5UF 10% 25V X7R 2125
C545 0.01UF 10% 25V 1005
C549 0.01UF 10% 16V 1005
C551 1UF 10% 10V 1608
C585 0.01UF 10% 25V 1005
C254 0.01UF 10% 25V 1005
C556 1UF 10V 10% 1608
C546 0.1UF 10% 25V 1608
C564 0.1UF 10% 25V 1608
C750 0.01UF 16V 10% 1005
C541 220UF 4V 20% 7343 TEPSLD0G227M_40_12R
C597 220UF 4V 20% 7343 TEPSLD0G227M_40_12R
C324 0.01UF 16V 10% 1005
C547 1UF 10% 10V 1608
C548 33PF 5% 50V 1005
R543 20 5% 1/16W 1608
R496 100K 5% 1/16W 1005
R916 100K 5% 1/16W 1005
R149 10 5% 1/16W 1608
R599 10 5% 1/16W 1608
R658 100K 5% 1/16W 1005
R701 2.00K 1% 1/16W 1005
R702 10K 1% 1/16W 1005
R708 510 5% 1/16W 1005
R711 10K 5% 1/16W 1005
R915 18K 5% 1/16W 1005
R191 100K 5% 1/16W 1005
R917 22K 5% 1/16W 1005
R609 0 5% 1/16W 1005 NO_ASM
UVP ILIM1 BST1 DH1 LX1 DL1 CS1 OUT1 FB1 ON1 TON REF -SKIP GND
VCC VDD V+
ILIM2 BST2 DH2 LX2 DL2 CS2 OUT2 FB2 ON2 PGOOD OVP
66.7G> IN VCC1R8M_ON
B_ON IN 66.6G>
VTT_PWRG OUT 68.5B<
PLACE NEAR MAX1845
PLACE NEAR MAX1845
GND

<!!> : CONNECT WITHOUT VIA

13R1088

DESIGNER	Y.I	11/21/03
CHECKED	Y.Y	11/21/03
APPROVED	K.T	11/21/03
CLASS	K.T	11/21/03

PART NO. 13R1088

IBM

TITLE ROME-1 RWK(V099)

DC-DC VCC1R2M/VCCCPUIO (MAX1845)

THIS DOCUMENT IS THE PROPERTY OF IBM ITS USE IS AUTHORIZED ONLY FOR RESPONDING TO A REQUEST FOR QUOTATION OR FOR THE PERFORMANCE OF WORK FOR IBM. ALL QUESTIONS MUST BE REFERRED TO THE IBM PURCHASING DEPARTMENT.

IBM CONFIDENTIAL

	DATE	EC NO.
REL	11/21/03	J45843A

PART NO. 13R1088

DEVELOPMENT NO.

Q/M 70 /82

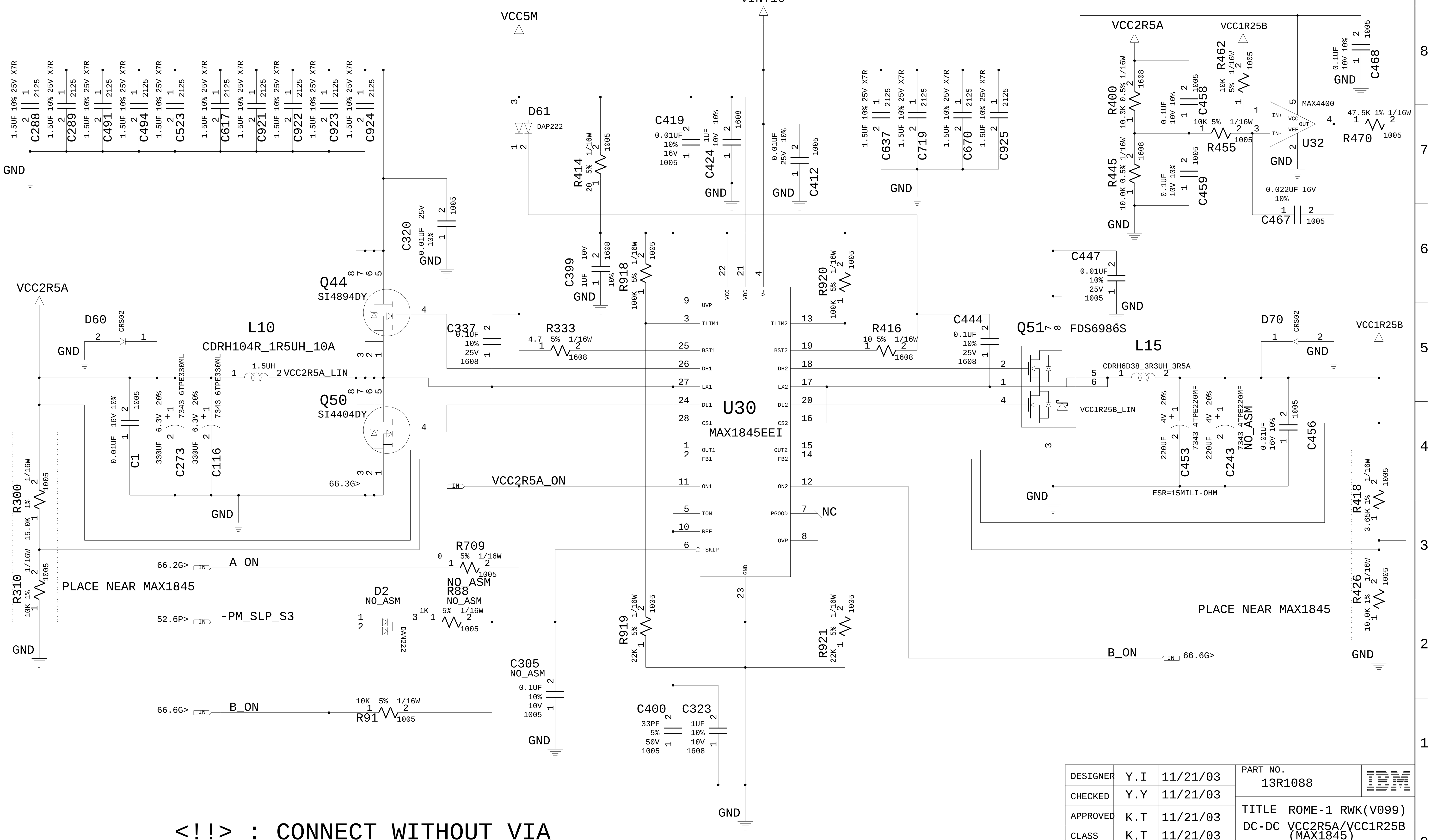
VCC5M
VINT16
VCC2R5A
VCC1R25B
C288 C289 C491 C494 C523 C617 C921 C922 C923 C924
1.5UF 10% 25V X7R 2125
GND
D61 DAP222
R414 20 5% 1/16W 1005
C419 0.01UF 10% 16V 1005
C424 1UF 10% 10V 1608
C412 0.01UF 25V 10% 1005
C637 C719 C670 C925 1.5UF 10% 25V X7R 2125
R400 10.0K 0.5% 1/16W 1608
R445 10.0K 0.5% 1/16W 1608
C458 0.1UF 10V 10% 1005
C459 0.1UF 10V 10% 1005
R462 10K 5% 1/16W 1005
R455 10K 5% 1/16W 1005
U32 MAX4400
IN+ IN- VCC VEE OUT
C468 0.1UF 10V 10% 1005
R470 47.5K 1% 1/16W 1005
C467 0.022UF 16V 10% 1005
C320 0.01UF 25V 10% 1005
Q44 SI4894DY
Q50 SI4404DY
C399 1UF 10V 10% 1608
R918 100K 5% 1/16W 1005
R920 100K 5% 1/16W 1005
C447 0.01UF 10% 25V 1005
D60 CRS02
L10 CDRH104R_1R5UH_10A 1.5UH
VCC2R5A_LIN
C337 0.1UF 10% 25V 1608
R333 4.7 5% 1/16W 1608
R416 10 5% 1/16W 1608
C444 0.1UF 10% 25V 1608
Q51 FDS6986S
D70 CRS02
L15 CDRH6D38_3R3UH_3R5A
VCC1R25B_LIN
C1 0.01UF 16V 10% 1005
C273 330UF 6.3V 20% 7343 6TPE330ML
C116 330UF 6.3V 20% 7343 6TPE330ML
U30 MAX1845EEI
UVP ILIM1 BST1 DH1 LX1 DL1 CS1 OUT1 FB1 ON1 TON REF -SKIP GND VCC VDD V+ ILIM2 BST2 DH2 LX2 DL2 CS2 OUT2 FB2 ON2 PGOOD OVP
NC
C453 220UF 4V 20% 7343 4TPE220MF
C243 220UF 4V 20% 7343 4TPE220MF NO_ASM
C456 0.01UF 16V 10% 1005
ESR=15MILI-OHM
R300 15.0K 1% 1/16W 1005
R310 10K 1% 1/16W 1005
PLACE NEAR MAX1845
R418 3.65K 1% 1/16W 1005
R426 10.0K 1% 1/16W 1005
66.3G>
VCC2R5A_ON
66.2G> A_ON
R709 0 5% 1/16W 1005 NO_ASM
52.6P> -PM_SLP_S3
D2 NO_ASM DAN222
R88 NO_ASM 1K 5% 1/16W 1005
66.6G> B_ON
R91 10K 5% 1/16W 1005
C305 NO_ASM 0.1UF 10% 10V 1005
C400 33PF 5% 50V 1005
C323 1UF 10% 10V 1608
B_ON 66.6G>

<!!> : CONNECT WITHOUT VIA

DESIGNER	Y.I	11/21/03
CHECKED	Y.Y	11/21/03
APPROVED	K.T	11/21/03
CLASS	K.T	11/21/03

PART NO. 13R1088

IBM

TITLE ROME-1 RWK(V099)

DC-DC VCC2R5A/VCC1R25B (MAX1845)

THIS DOCUMENT IS THE PROPERTY OF IBM ITS USE IS AUTHORIZED ONLY FOR RESPONDING TO A REQUEST FOR QUOTATION OR FOR THE PERFORMANCE OF WORK FOR IBM. ALL QUESTIONS MUST BE REFERRED TO THE IBM PURCHASING DEPARTMENT.

IBM CONFIDENTIAL

13R1088

	DATE	EC NO.
REL	11/21/03	J45843A

PART NO. 13R1088

DEVELOPMENT NO.

Q/M 71 /82

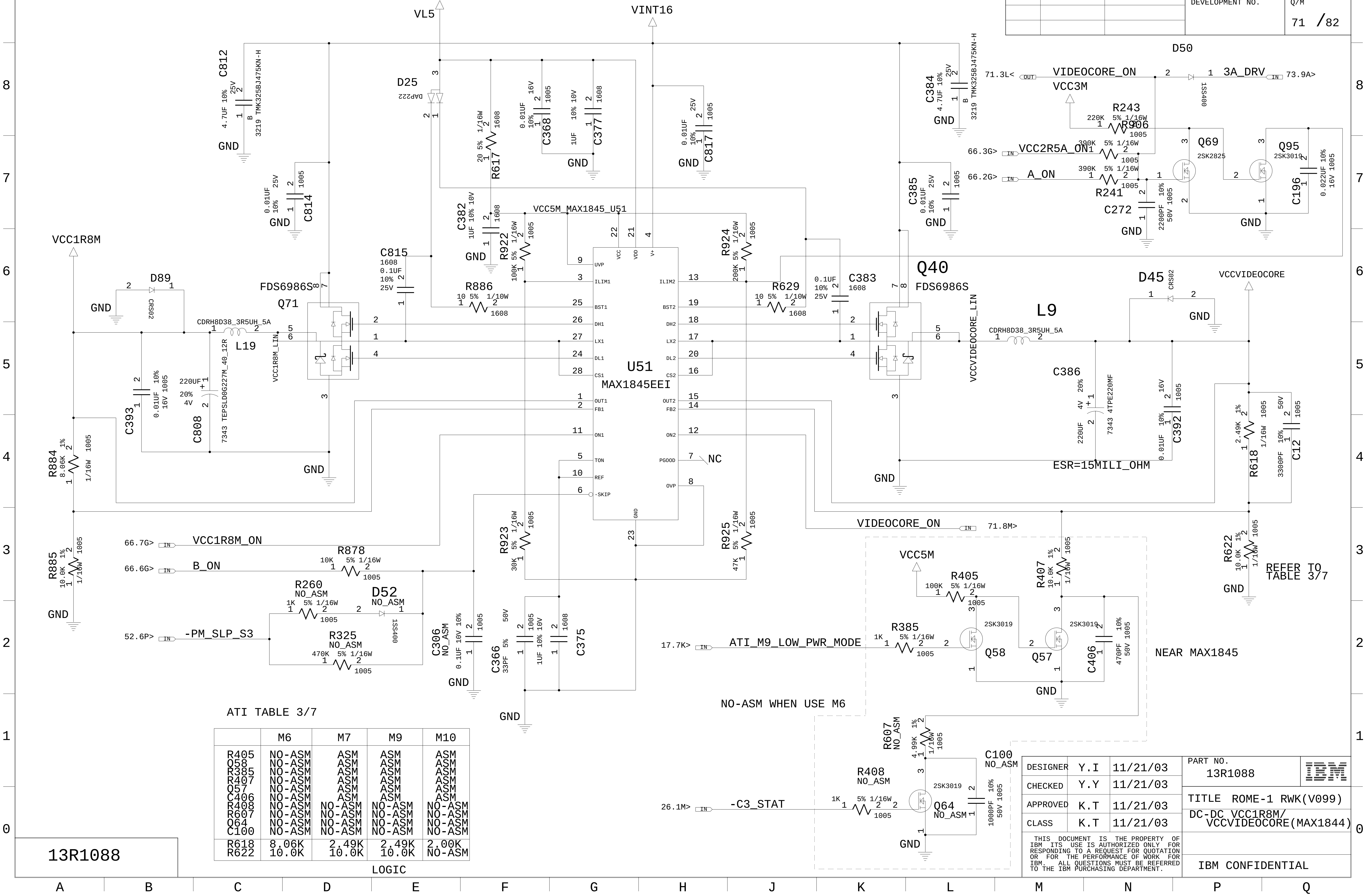
VL5
VINT16
VCC1R8M
VCCVIDEOCORE
VCC3M
VCC5M
D25
DAP222
D89
CRS02
D45
D50
1SS400
D52
NO_ASM
C812
4.7UF 10% 25V
3219 TMK325BJ475KN-H
C814
0.01UF 10% 25V 1005
C368
C377
C817
C382
1UF 10% 10V 1608
C815
0.1UF 10% 25V 1608
R617
20 5% 1/16W 1608
R922
100K 5% 1/16W 1005
R886
10 5% 1/10W 1608
R924
200K 5% 1/16W 1005
R629
C383
C384
C385
R243
220K 5% 1/16W
R906
VCC2R5A_ON
A_ON
R241
390K 5% 1/16W 1005
C272
2200PF 10% 50V 1005
Q69
2SK2825
Q95
2SK3019
C196
0.022UF 10% 16V 1005
VIDEOCORE_ON
3A_DRV
71.3L<
73.9A>
66.3G>
66.2G>
Q71
FDS6986S
Q40
FDS6986S
L19
CDRH8D38_3R5UH_5A
L9
VCC1R8M_LIN
VCCVIDEOCORE_LIN
C393
0.01UF 10% 16V 1005
C808
220UF 20% 4V
7343 TEPSLD0G227M_40_12R
C386
220UF 20% 4V
7343 4TPE220MF
ESR=15MILI_OHM
C392
0.01UF 10% 16V 1005
R618
2.49K 1% 1/16W 1005
C12
3300PF 10% 50V 1005
R622
10.0K 1% 1/16W 1005
REFER TO TABLE 3/7
R884
8.06K 1% 1/16W 1005
R885
10.0K 1% 1/16W 1005
U51
MAX1845EEI
VCC5M_MAX1845_U51
UVP
ILIM1
BST1
DH1
LX1
DL1
CS1
OUT1
FB1
ON1
TON
REF
-SKIP
VCC
VDD
V+
GND
ILIM2
BST2
DH2
LX2
DL2
CS2
OUT2
FB2
ON2
PGOOD
OVP
NC
R923
30K 5% 1/16W 1005
R925
47K 5% 1/16W 1005
VCC1R8M_ON
66.7G>
B_ON
66.6G>
R878
10K 5% 1/16W 1005
R260
NO_ASM
1K 5% 1/16W 1005
-PM_SLP_S3
52.6P>
R325
NO_ASM
470K 5% 1/16W 1005
C306
NO_ASM
0.1UF 10% 10V 1005
C366
33PF 5% 50V 1005
C375
1UF 10% 10V 1608
VIDEOCORE_ON
71.8M>
R405
100K 5% 1/16W 1005
R407
10.0K 1% 1/16W 1005
R385
1K 5% 1/16W 1005
ATI_M9_LOW_PWR_MODE
17.7K>
Q58
Q57
2SK3019
C406
470PF 10% 50V 1005
NEAR MAX1845
NO-ASM WHEN USE M6
R607
NO_ASM
4.99K 1% 1/16W 1005
R408
NO_ASM
1K 5% 1/16W 1005
-C3_STAT
26.1M>
Q64
NO_ASM
C100
NO_ASM
1000PF 10% 50V 1005
GND

ATI TABLE 3/7

	M6	M7	M9	M10
R405	NO-ASM	ASM	ASM	ASM
Q58	NO-ASM	ASM	ASM	ASM
R385	NO-ASM	ASM	ASM	ASM
R407	NO-ASM	ASM	ASM	ASM
Q57	NO-ASM	ASM	ASM	ASM
C406	NO-ASM	ASM	ASM	ASM
R408	NO-ASM	NO-ASM	NO-ASM	NO-ASM
R607	NO-ASM	NO-ASM	NO-ASM	NO-ASM
Q64	NO-ASM	NO-ASM	NO-ASM	NO-ASM
C100	NO-ASM	NO-ASM	NO-ASM	NO-ASM
R618	8.06K	2.49K	2.49K	2.00K
R622	10.0K	10.0K	10.0K	NO-ASM

LOGIC

DESIGNER	Y.I	11/21/03
CHECKED	Y.Y	11/21/03
APPROVED	K.T	11/21/03
CLASS	K.T	11/21/03

PART NO. 13R1088

IBM

TITLE ROME-1 RWK(V099)

DC-DC VCC1R8M/
VCCVIDEOCORE(MAX1844)

IBM CONFIDENTIAL

	DATE	EC NO.
REL	11/21/03	J45843A

PART NO. 13R1088

DEVELOPMENT NO.

Q/M 72 /82

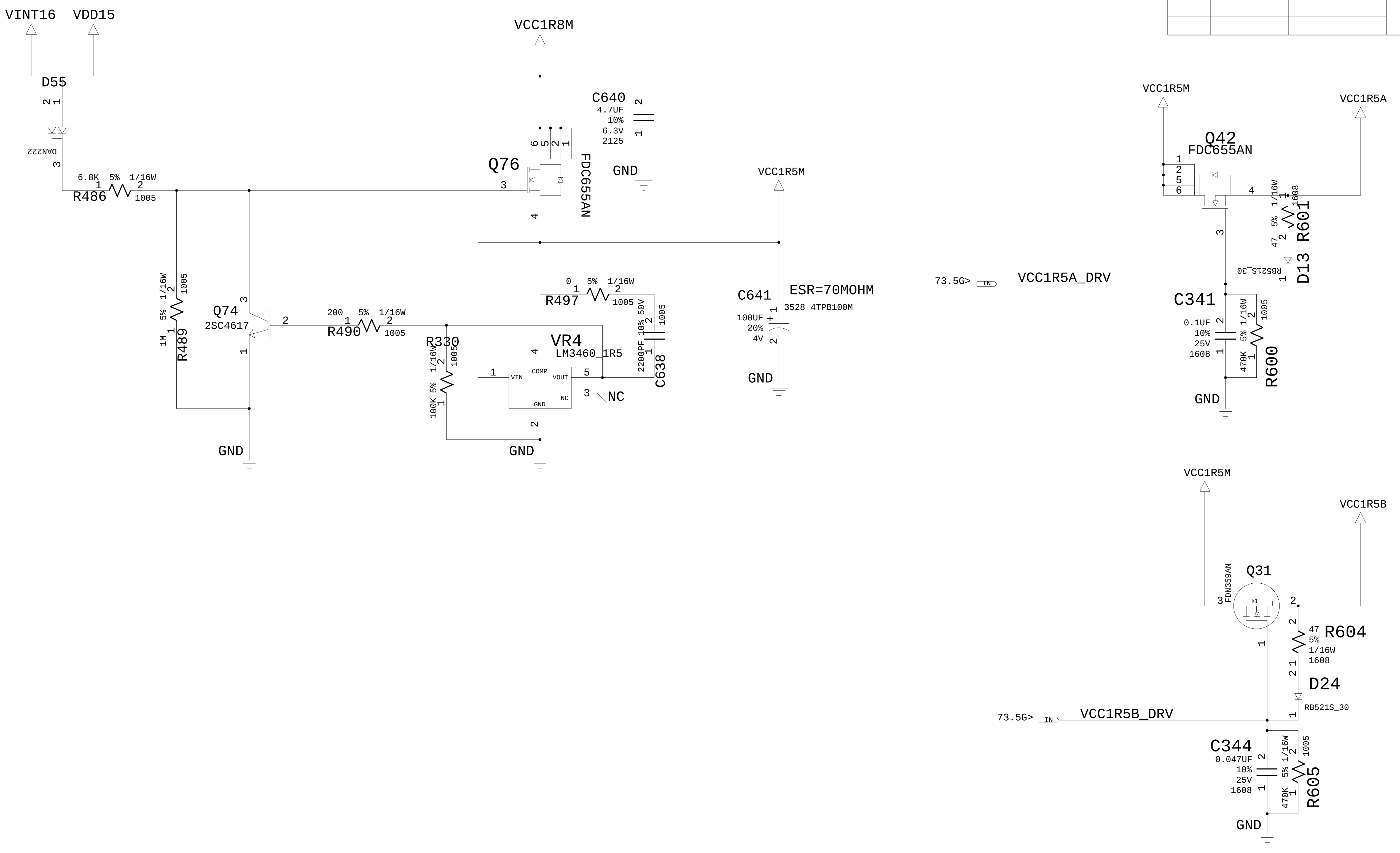

VINT16
VDD15
D55
DAN222
R486
6.8K 5% 1/16W 1005
VCC1R8M
C640
4.7UF 10% 6.3V 2125
GND
Q76
FDC655AN
VCC1R5M
R489
1M 5% 1/16W 1005
Q74
2SC4617
R490
200 5% 1/16W 1005
R330
100K 5% 1/16W 1005
R497
0 5% 1/16W 1005
VR4
LM3460_1R5
VIN
COMP
VOUT
GND
NC
C638
2200PF 10% 50V 1005
C641
100UF 20% 4V
ESR=70MOHM
3528 4TPB100M
GND
GND
GND
VCC1R5M
VCC1R5A
Q42
FDC655AN
R601
47 5% 1/16W 1608
D13
RB521S_30
73.5G>
IN
VCC1R5A_DRV
C341
0.1UF 10% 25V 1608
R600
470K 5% 1/16W 1005
GND
VCC1R5M
VCC1R5B
Q31
FDN359AN
R604
47 5% 1/16W 1608
D24
RB521S_30
73.5G>
IN
VCC1R5B_DRV
C344
0.047UF 10% 25V 1608
R605
470K 5% 1/16W 1005
GND

13R1088

DESIGNER	Y.I	11/21/03	PART NO. 13R1088
CHECKED	Y.Y	11/21/03	
APPROVED	K.T	11/21/03	TITLE ROME-1 RWK(V099)
CLASS	K.T	11/21/03	VCC1R5M/A/B/AUX

IBM

IBM CONFIDENTIAL

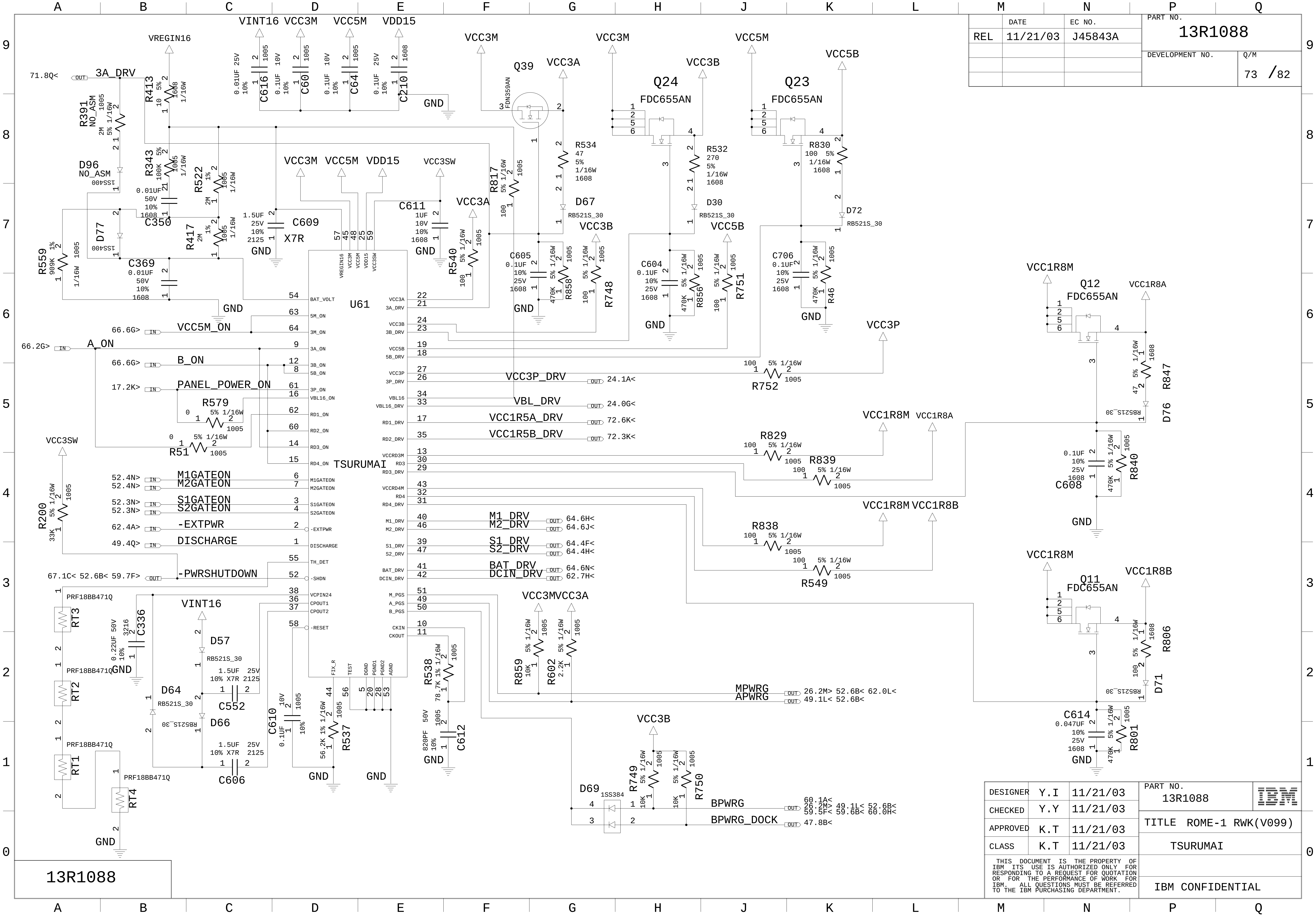

A B C D E F G H J K L M N P Q
9 8 7 6 5 4 3 2 1 0
VINT16
VCC3M
VCC5M
VDD15
VREGIN16
C616 0.01UF 25V 10% 1005
C60 0.1UF 10V 10% 1005
C64 0.1UF 10V 10% 1005
C210 0.1UF 25V 10% 1608
GND
71.8Q< OUT 3A_DRV
R413 10 5% 1608 1/16W
R391 NO_ASM 2M 5% 1/16W 1005
D96 NO_ASM 1SS400
R343 100K 5% 1/16W 1005
C350 0.01UF 50V 10% 1608
R522 2M 1% 1/16W 1005
R417 2M 1% 1/16W 1005
D77 1SS400
R559 909K 1% 1/16W 1005
C369 0.01UF 50V 10% 1608
C609 1.5UF 25V 10% 2125 X7R
VCC3SW
C611 1UF 10V 10% 1608
Q39 FDN359AN
VCC3A
R534 47 5% 1/16W 1608
D67 RB521S_30
R817 100 5% 1/16W 1005
R540 100 5% 1/16W 1005
C605 0.1UF 10% 25V 1608
R858 470K 5% 1/16W 1005
VCC3B
R748 100 5% 1/16W 1005
Q24 FDC655AN
R532 270 5% 1/16W 1608
D30 RB521S_30
C604 0.1UF 10% 25V 1608
R856 470K 5% 1/16W 1005
VCC5B
R751 100 5% 1/16W 1005
Q23 FDC655AN
R830 100 5% 1/16W 1608
D72 RB521S_30
C706 0.1UF 10% 25V 1608
R46 470K 5% 1/16W 1005
U61 TSURUMAI
VREGIN16 VCC3M VCC5M VDD15 VCC3SW
54 BAT_VOLT
63 5M_ON
66.6G> IN VCC5M_ON 64 3M_ON
66.2G> IN A_ON 9 3A_ON
66.6G> IN B_ON 12 3B_ON 8 5B_ON
17.2K> IN PANEL_POWER_ON 61 3P_ON
16 VBL16_ON
R579 0 5% 1/16W 1005
62 RD1_ON
60 RD2_ON
R51 0 5% 1/16W 1005
14 RD3_ON
15 RD4_ON
52.4N> IN M1GATEON 6 M1GATEON
52.4N> IN M2GATEON 7 M2GATEON
52.3N> IN S1GATEON 3 S1GATEON
52.3N> IN S2GATEON 4 S2GATEON
62.4A> IN -EXTPWR 2 -EXTPWR
49.4Q> IN DISCHARGE 1 DISCHARGE
55 TH_DET
67.1C< 52.6B< 59.7F> OUT -PWRSHUTDOWN 52 -SHDN
38 VCPIN24
36 CPOUT1
37 CPOUT2
58 -RESET
FIX_R TEST DGND PGND1 PGND2 AGND
44 56 5 20 28 53
VCC3A 22
3A_DRV 21
VCC3B 24
3B_DRV 23
VCC5B 19
5B_DRV 18
VCC3P 27
3P_DRV 26 VCC3P_DRV OUT 24.1A<
VBL16 34
VBL16_DRV 33 VBL_DRV OUT 24.0G<
RD1_DRV 17 VCC1R5A_DRV OUT 72.6K<
RD2_DRV 35 VCC1R5B_DRV OUT 72.3K<
VCCRD3M 13
RD3 30
RD3_DRV 29
VCCRD4M 43
RD4 32
RD4_DRV 31
M1_DRV 40 M1_DRV OUT 64.6H<
M2_DRV 46 M2_DRV OUT 64.6J<
S1_DRV 39 S1_DRV OUT 64.4F<
S2_DRV 47 S2_DRV OUT 64.4H<
BAT_DRV 41 BAT_DRV OUT 64.6N<
DCIN_DRV 42 DCIN_DRV OUT 62.7H<
M_PGS 51
A_PGS 49
B_PGS 50
CKIN 10
CKOUT 11
VCC3P
R752 100 5% 1/16W 1005
VCC1R8M
VCC1R8A
R829 100 5% 1/16W 1005
R839 100 5% 1/16W 1005
VCC1R8B
R838 100 5% 1/16W 1005
R549 100 5% 1/16W 1005
Q12 FDC655AN
R847 47 5% 1/16W 1608
D76 RB521S_30
C608 0.1UF 10% 25V 1608
R840 470K 5% 1/16W 1005
Q11 FDC655AN
R806 100 5% 1/16W 1608
D71 RB521S_30
C614 0.047UF 10% 25V 1608
R801 470K 5% 1/16W 1005
R200 33K 5% 1/16W 1005
RT3 PRF18BB471Q
RT2 PRF18BB471Q
RT1 PRF18BB471Q
RT4 PRF18BB471Q
C336 0.22UF 50V 10% 3216
D57 RB521S_30
D64 RB521S_30
D66 RB521S_30
C552 1.5UF 25V 10% X7R 2125
C606 1.5UF 25V 10% X7R 2125
C610 0.1UF 10V 10% 1005
R537 56.2K 1% 1/16W 1005
R538 78.7K 1% 1/16W 1005
C612 820PF 50V 10% 1005
VCC3M VCC3A
R859 10K 5% 1/16W 1005
R602 2.2K 5% 1/16W 1005
MPWRG OUT 26.2M> 52.6B< 62.0L<
APWRG OUT 49.1L< 52.6B<
R749 10K 5% 1/16W 1005
R750 10K 5% 1/16W 1005
D69 1SS384
BPWRG OUT 60.1A< 26.2M> 49.1L< 52.6B< 59.5F< 59.6B< 60.0H<
BPWRG_DOCK OUT 47.8B<

REL	DATE	EC NO.
REL	11/21/03	J45843A

PART NO. 13R1088

DEVELOPMENT NO.

Q/M 73 /82

DESIGNER	Y.I	11/21/03	PART NO. 13R1088
CHECKED	Y.Y	11/21/03	TITLE ROME-1 RWK(V099)
APPROVED	K.T	11/21/03	
CLASS	K.T	11/21/03	TSURUMAI

IBM

THIS DOCUMENT IS THE PROPERTY OF IBM ITS USE IS AUTHORIZED ONLY FOR RESPONDING TO A REQUEST FOR QUOTATION OR FOR THE PERFORMANCE OF WORK FOR IBM. ALL QUESTIONS MUST BE REFERRED TO THE IBM PURCHASING DEPARTMENT.

IBM CONFIDENTIAL

13R1088

	DATE	EC NO.
REL	11/21/03	J45843A

PART NO. 13R1088

DEVELOPMENT NO.

Q/M 74 /82

ASM FOR KENAI II-32

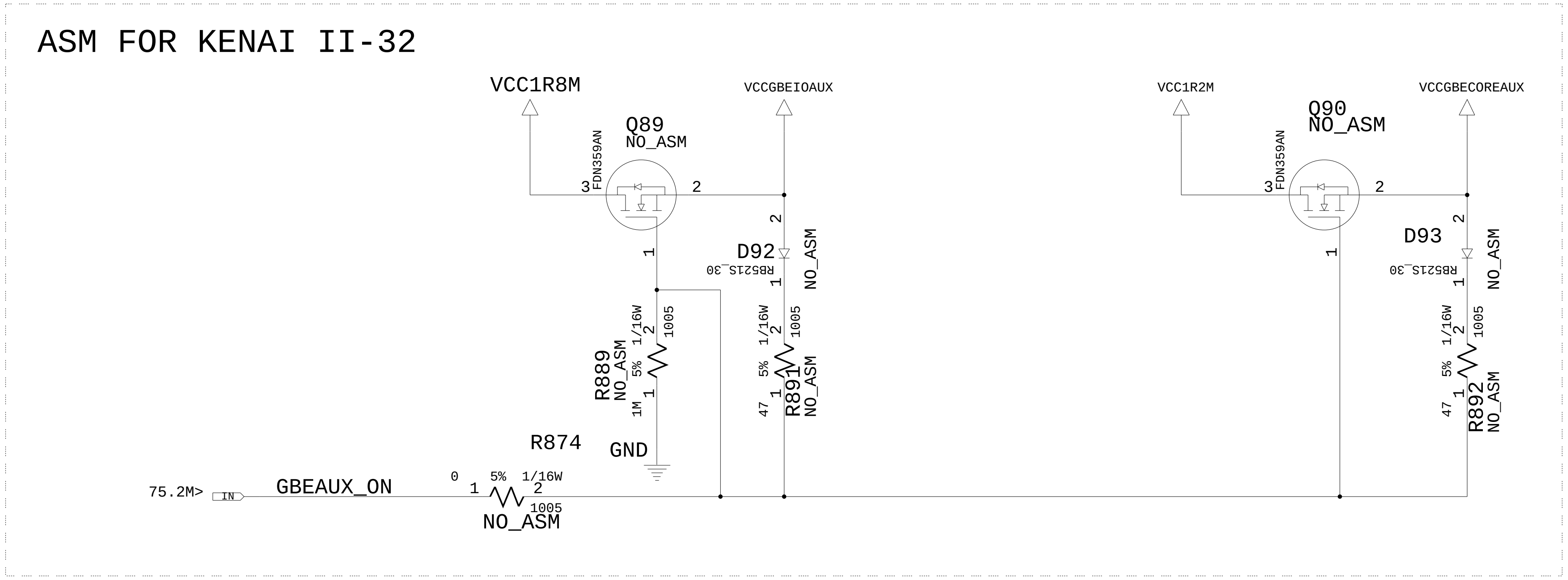

VCC1R8M
VCCGBEIOAUX
Q89
NO_ASM
FDN359AN
3
2
1
D92
RB521S_30
NO_ASM
R889
NO_ASM
5%
1/16W
1005
1M
R891
NO_ASM
47
GND
R874
0
5%
1/16W
1005
NO_ASM
75.2M>
IN
GBEAUX_ON
VCC1R2M
VCCGBECOREAUX
Q90
NO_ASM
FDN359AN
D93
RB521S_30
NO_ASM
R892
NO_ASM
47

	KENAI32	KINNERETH-R	KENAI2-32
VCCGBECOREAUX	1.5V	3.3V	1.2V
VCCGBIOAUX	2.5V	N.C.	1.8V

ETHERNET TABLE (5/5)

		KENNERETH-R	KENAI2-32	KENAI32M
2.5V	U31 C665 C668	NO-ASM NO-ASM NO-ASM	NO-ASM NO-ASM NO-ASM	ASM ASM ASM
1.5V	R887	NO-ASM	NO-ASM	ASM
3.3V	R888	ASM	NO-ASM	NO-ASM
1.2V 1.8V	Q89 R874 R889 R891 D92 Q90 R892 D93	NO-ASM NO-ASM NO-ASM NO-ASM NO-ASM NO-ASM NO-ASM NO-ASM	ASM ASM ASM ASM ASM ASM ASM ASM	NO-ASM NO-ASM NO-ASM NO-ASM NO-ASM NO-ASM NO-ASM NO-ASM

LOGIC

ASM FOR KENAI32M

ASM FOR KINNERETH-R

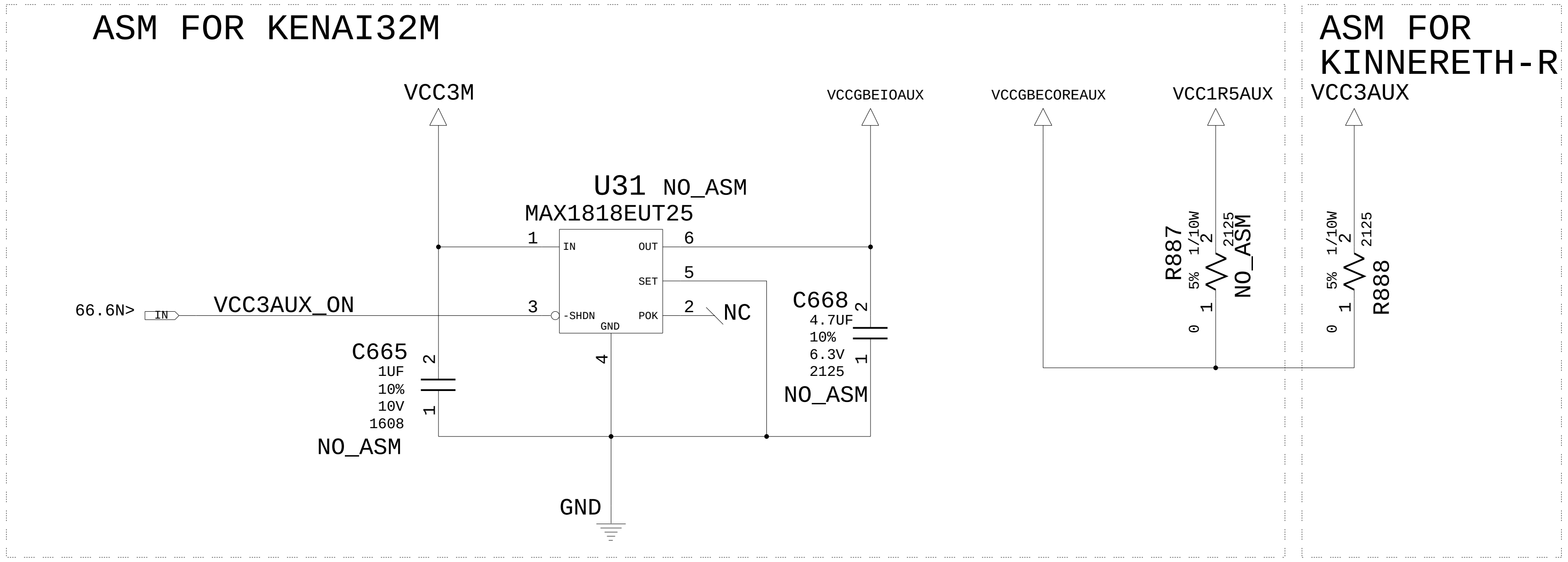

VCC3M
VCCGBEIOAUX
VCCGBECOREAUX
VCC1R5AUX
VCC3AUX
U31 NO_ASM
MAX1818EUT25
IN
OUT
SET
-SHDN
POK
GND
1
6
5
3
2
4
NC
66.6N>
IN
VCC3AUX_ON
C665
1UF
10%
10V
1608
NO_ASM
C668
4.7UF
10%
6.3V
2125
NO_ASM
R887
5%
1/10W
2125
0
NO_ASM
R888
5%
1/10W
2125
0
GND

DESIGNER	Y.I	11/21/03
CHECKED	Y.Y	11/21/03
APPROVED	K.T	11/21/03
CLASS	K.T	11/21/03

PART NO. 13R1088

IBM

TITLE ROME-1 RWK(V099)

DC-DC VCC2R5AUX,LOAD SW

IBM CONFIDENTIAL

13R1088

	DATE	EC NO.
REL	11/21/03	J45843A

PART NO. 13R1088

DEVELOPMENT NO.

Q/M 75 /82

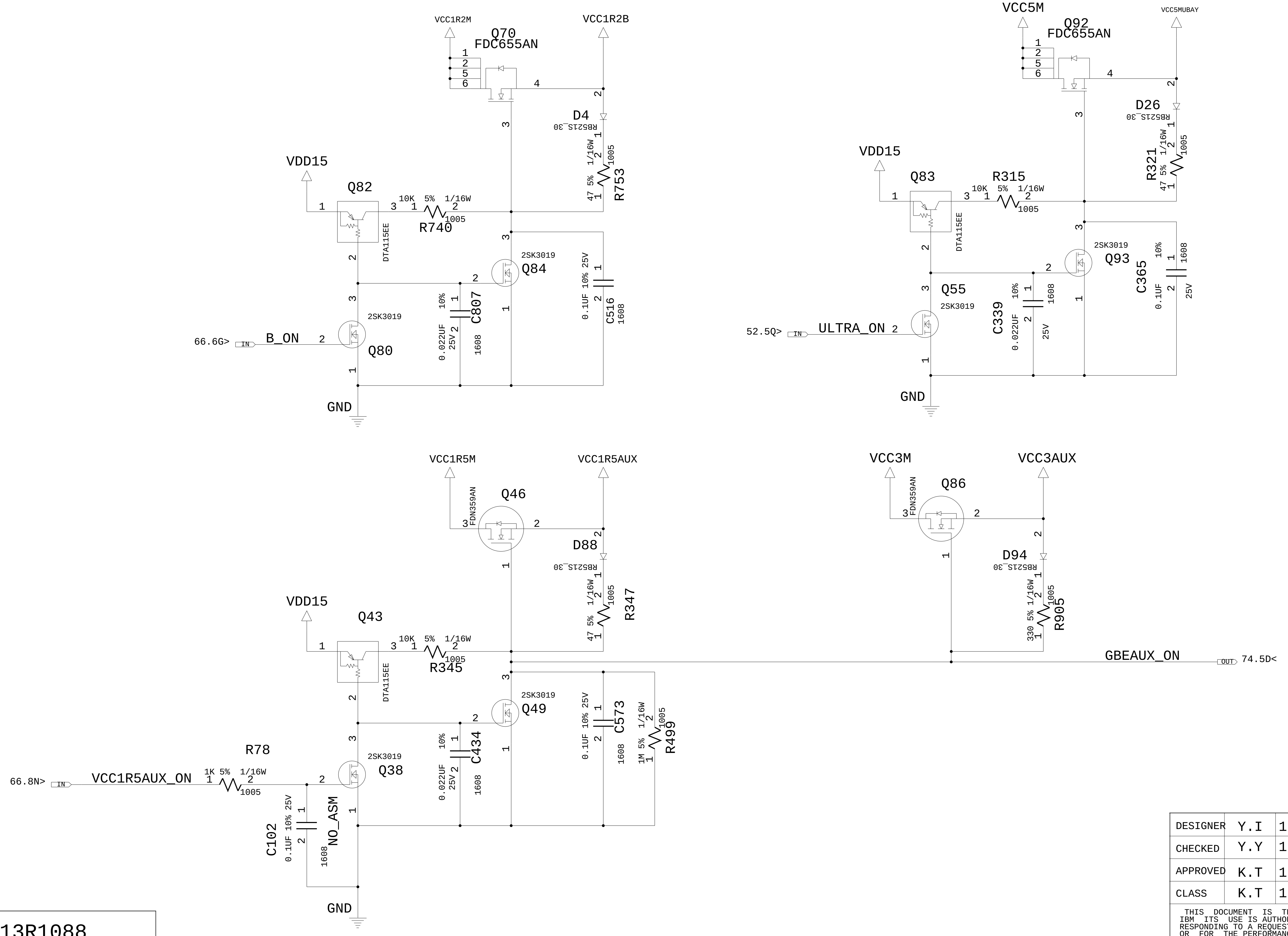

VCC1R2M
VCC1R2B
Q70
FDC655AN
D4
RB521S_30
R753
47 5% 1/16W 1005
VDD15
Q82
DTA115EE
10K 5% 1/16W
R740
1005
Q84
2SK3019
C807
0.022UF 25V 10% 1608
C516
0.1UF 10% 25V 1608
Q80
2SK3019
66.6G>
IN
B_ON
GND
VCC5M
VCC5MUBAY
Q92
FDC655AN
D26
RB521S_30
R321
47 5% 1/16W 1005
VDD15
Q83
DTA115EE
R315
10K 5% 1/16W 1005
Q93
2SK3019
C365
0.1UF 10% 25V 1608
Q55
2SK3019
C339
0.022UF 10% 25V 1608
52.5Q>
IN
ULTRA_ON
GND
VCC1R5M
VCC1R5AUX
Q46
FDN359AN
D88
RB521S_30
R347
47 5% 1/16W 1005
VDD15
Q43
DTA115EE
10K 5% 1/16W 1005
R345
Q49
2SK3019
C434
0.022UF 25V 10% 1608
C573
0.1UF 10% 25V 1608
R499
1M 5% 1/16W 1005
Q38
2SK3019
R78
1K 5% 1/16W 1005
66.8N>
IN
VCC1R5AUX_ON
C102
0.1UF 10% 25V 1608
NO_ASM
GND
VCC3M
VCC3AUX
Q86
FDN359AN
D94
RB521S_30
R905
330 5% 1/16W 1005
GBEAUX_ON
OUT
74.5D<

13R1088

DESIGNER	Y.I	11/21/03
CHECKED	Y.Y	11/21/03
APPROVED	K.T	11/21/03
CLASS	K.T	11/21/03

PART NO. 13R1088

IBM

TITLE ROME-1 RWK(V099)

DC-DC LOAD SW

IBM CONFIDENTIAL

REL	DATE	EC NO.
REL	11/21/03	J45843A

PART NO. 13R1088

DEVELOPMENT NO.

Q/M 76 /82

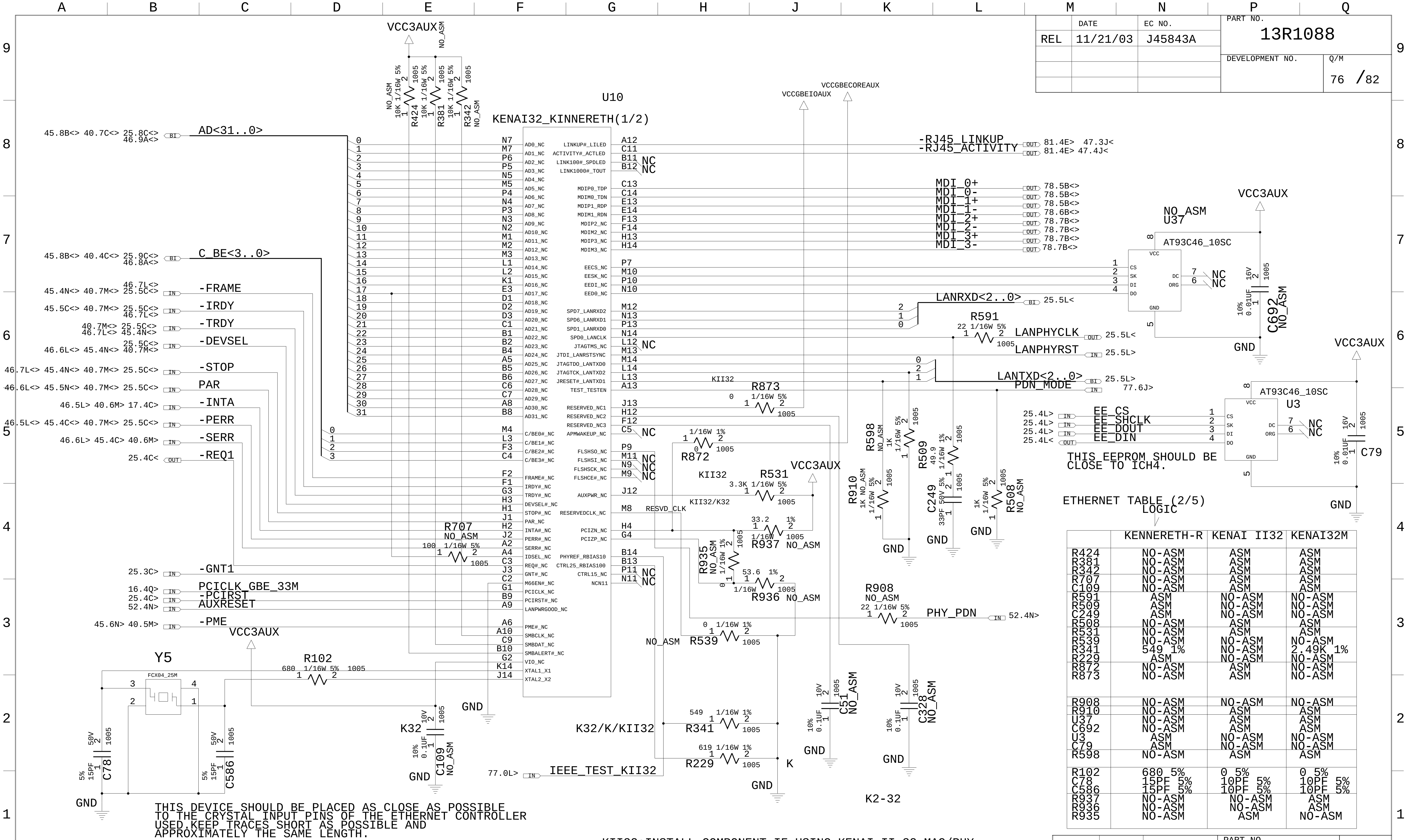

U10
KENAI32_KINNERETH(1/2)
VCC3AUX
NO_ASM
R424 10K 1/16W 5% 1005 NO_ASM
R381 10K 1/16W 5% 1005
R342 10K 1/16W 5% 1005 NO_ASM
AD<31..0>
45.8B<> 40.7C<> 25.8C<> 46.9A<>
C_BE<3..0>
45.8B<> 40.4C<> 25.9C<> 46.8A<>
-FRAME
-IRDY
-TRDY
-DEVSEL
-STOP
PAR
-INTA
-PERR
-SERR
-REQ1
-GNT1
PCICLK_GBE_33M
-PCIRST
AUXRESET
-PME
VCCGBEIOAUX
VCCGBECOREAUX
-RJ45_LINKUP 81.4E> 47.3J<
-RJ45_ACTIVITY 81.4E> 47.4J<
MDI_0+
MDI_0-
MDI_1+
MDI_1-
MDI_2+
MDI_2-
MDI_3+
MDI_3-
LANRXD<2..0> 25.5L<
R591 22 1/16W 5% 1005
LANPHYCLK 25.5L<
LANPHYRST 25.5L>
LANTXD<2..0> 25.5L>
PDN_MODE 77.6J>
KII32
R873 0 1/16W 5% 1005
R872 0 1/16W 1% 1005
R531 3.3K 1/16W 5% 1005
KII32/K32
RESVD_CLK
R937 33.2 1/16W 1% 1005 NO_ASM
R935 NO_ASM 0 1/16W 1005
R936 53.6 1/16W 1% NO_ASM
R908 NO_ASM 22 1/16W 5% 1005
PHY_PDN 52.4N>
R539 0 1/16W 1% 1005
NO_ASM
R341 549 1/16W 1% 1005
R229 619 1/16W 1% 1005
K32/K/KII32
K
IEEE_TEST_KII32 77.0L>
R707 NO_ASM 100 1/16W 5% 1005
R102 680 1/16W 5% 1005
Y5 FCX04_25M
C78 15PF 5% 50V 1005
C586 15PF 5% 50V 1005
C109 0.1UF 10% 10V 1005 NO_ASM
K32
C51 0.1UF 10% 10V 1005 NO_ASM
C328 0.1UF 10% 10V 1005 NO_ASM
K2-32
R598 NO_ASM 1K 1/16W 5% 1005
R509 49.9 1/16W 1% 1005
R910 1K NO_ASM 1/16W 5% 1005
C249 33PF 50V 5% 1005
R508 1K 1/16W 5% 1005 NO_ASM
U37 NO_ASM AT93C46_10SC
C692 0.01UF 10% 16V 1005 NO_ASM
U3 AT93C46_10SC
C79 0.01UF 10% 16V 1005
EE_CS
EE_SHCLK
EE_DOUT
EE_DIN
THIS EEPROM SHOULD BE CLOSE TO ICH4.
GND
NC

THIS DEVICE SHOULD BE PLACED AS CLOSE AS POSSIBLE TO THE CRYSTAL INPUT PINS OF THE ETHERNET CONTROLLER USED.KEEP TRACES SHORT AS POSSIBLE AND APPROXIMATELY THE SAME LENGTH.

ETHERNET TABLE (2/5)

LOGIC

	KENNERETH-R	KENAI II32	KENAI32M
R424	NO-ASM	ASM	ASM
R381	NO-ASM	ASM	ASM
R342	NO-ASM	ASM	ASM
R707	NO-ASM	ASM	ASM
C109	NO-ASM	ASM	ASM
R591	ASM	NO-ASM	NO-ASM
R509	ASM	NO-ASM	NO-ASM
C249	ASM	NO-ASM	NO-ASM
R508	NO-ASM	ASM	ASM
R531	NO-ASM	ASM	ASM
R539	NO-ASM	NO-ASM	NO-ASM
R341	549 1%	NO-ASM	2.49K 1%
R229	ASM	NO-ASM	NO-ASM
R872	NO-ASM	ASM	NO-ASM
R873	NO-ASM	ASM	NO-ASM
R908	NO-ASM	NO-ASM	NO-ASM
R910	NO-ASM	ASM	ASM
U37	NO-ASM	ASM	ASM
C692	NO-ASM	ASM	ASM
U3	ASM	NO-ASM	NO-ASM
C79	ASM	NO-ASM	NO-ASM
R598	NO-ASM	ASM	ASM
R102	680 5%	0 5%	0 5%
C78	15PF 5%	10PF 5%	10PF 5%
C586	15PF 5%	10PF 5%	10PF 5%
R937	NO-ASM	NO-ASM	ASM
R936	NO-ASM	NO-ASM	ASM
R935	NO-ASM	ASM	NO-ASM

KII32:INSTALL COMPONENT IF USING KENAI II 32 MAC/PHY

K32:INSTALL COMPONENT IF USING KENAI32 MAC/PHY

K:INSTALL COMPONENT IF USING KINERRETHPHY

FOR R341 : INSTALL 549 OHM RESISTOR (1%) WITH KINNERETH CONTROLLER OR 2.49K OHM RESISTOR (1%) WITH KENAI32 CONTROLLER BUT NO RESISTER WITH KENAI II 32.

DESIGNER	Y.I	11/21/03
CHECKED	Y.Y	11/21/03
APPROVED	K.T	11/21/03
CLASS	K.T	11/21/03

PART NO. 13R1088

TITLE ROME-1 RWK(V099)

GIGABIT ETHERNET (1/3)

IBM CONFIDENTIAL

	DATE	EC NO.
REL	11/21/03	J45843A

PART NO. 13R1088

DEVELOPMENT NO.

Q/M 77 /82

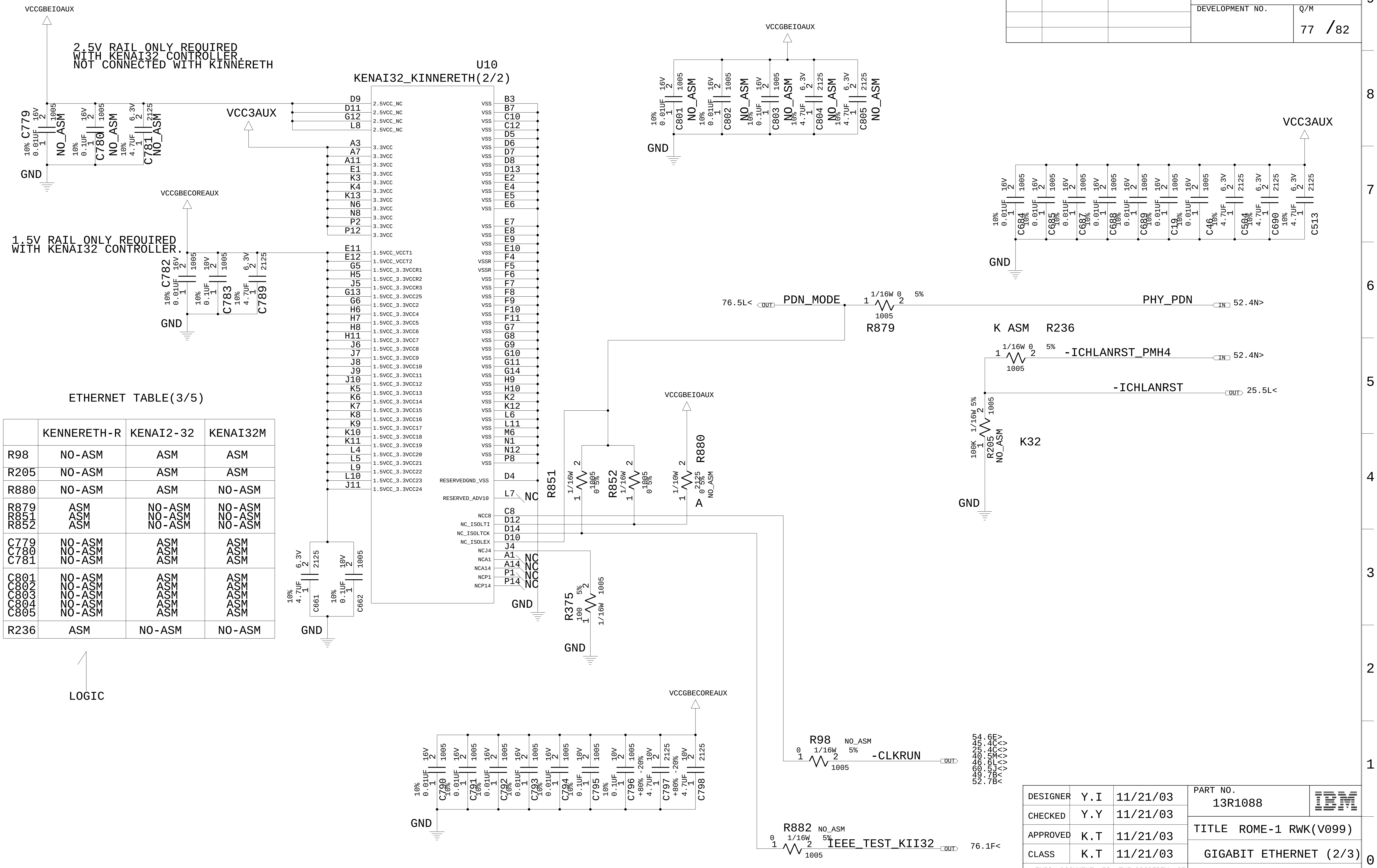
VCCGBEIOAUX
2.5V RAIL ONLY REQUIRED
WITH KENAI32 CONTROLLER.
NOT CONNECTED WITH KINNERETH
C779 0.01UF 10% 16V 1005 NO_ASM
C780 0.1UF 10% 16V 1005 NO_ASM
C781 4.7UF 10% 6.3V 2125 NO_ASM
GND
VCC3AUX
U10
KENAI32_KINNERETH(2/2)
D9 D11 G12 L8 2.5VCC_NC
A3 A7 A11 E1 K3 K4 K13 N6 N8 P2 P12 3.3VCC
E11 E12 1.5VCC_VCCT1 1.5VCC_VCCT2
G5 H5 J5 G13 G6 H6 H7 H8 H11 J6 J7 J8 J9 J10 K5 K6 K7 K8 K9 K10 K11 L4 L5 L9 L10 J11 1.5VCC_3.3VCCR1 … 1.5VCC_3.3VCC24
B3 B7 C10 C12 D5 D6 D7 D8 D13 E2 E4 E5 E6 E7 E8 E9 E10 F4 F5 F6 F7 F8 F9 F10 F11 G7 G8 G9 G10 G11 G14 H9 H10 K2 K12 L6 L11 M6 N1 N12 P8 VSS
D4 RESERVEDGND_VSS
L7 RESERVED_ADV10 NC
C8 NCC8
D12 NC_ISOLTI
D14 NC_ISOLTCK
D10 NC_ISOLEX
J4 NCJ4
A1 NCA1 NC
A14 NCA14 NC
P1 NCP1 NC
P14 NCP14 NC
VCCGBECOREAUX
1.5V RAIL ONLY REQUIRED
WITH KENAI32 CONTROLLER.
C782 0.01UF 10% 16V 1005
C783 0.1UF 10% 10V 1005
C789 4.7UF 10% 6.3V 2125
C661 4.7UF 10% 6.3V 2125
C662 0.1UF 10% 10V 1005
C801 0.01UF 10% 16V 1005 NO_ASM
C802 0.01UF 10% 16V 1005 NO_ASM
C803 0.1UF 10% 16V 1005 NO_ASM
C804 4.7UF 10% 6.3V 2125 NO_ASM
C805 4.7UF 10% 6.3V 2125 NO_ASM
C684 C685 C687 C688 C689 C19 0.01UF 10% 16V 1005
C46 C504 C690 C513 4.7UF 10% 6.3V 2125
76.5L< OUT PDN_MODE
R879 1/16W 0 5% 1005
PHY_PDN IN 52.4N>
K ASM R236
R236 1/16W 0 5% 1005
-ICHLANRST_PMH4 IN 52.4N>
-ICHLANRST OUT 25.5L<
R205 100K 1/16W 5% 1005 NO_ASM
K32
R851 1/16W 0 5% 1005
R852 1/16W 0 5% 1005
R880 1/10W 0 5% 2125 NO_ASM
A
R375 100 1/16W 5% 1005
C790 0.01UF 10% 16V 1005
C791 0.01UF 10% 16V 1005
C792 0.01UF 10% 16V 1005
C793 0.01UF 10% 16V 1005
C794 0.1UF 10% 16V 1005
C795 0.1UF 10% 10V 1005
C796 4.7UF +80% -20% 10V 1005
C797 4.7UF +80% -20% 10V 2125
C798 10V 2125
R98 NO_ASM 0 1/16W 5% 1005
-CLKRUN OUT
54.6E> 45.4C<> 25.4C<> 40.5M<> 46.5L<> 60.5J<> 49.7B< 52.7B<
R882 NO_ASM 0 1/16W 5% 1005
IEEE_TEST_KII32 OUT 76.1F<
LOGIC

ETHERNET TABLE(3/5)

	KENNERETH-R	KENAI2-32	KENAI32M
R98	NO-ASM	ASM	ASM
R205	NO-ASM	ASM	ASM
R880	NO-ASM	ASM	NO-ASM
R879 R851 R852	ASM ASM ASM	NO-ASM NO-ASM NO-ASM	NO-ASM NO-ASM NO-ASM
C779 C780 C781	NO-ASM NO-ASM NO-ASM	ASM ASM ASM	ASM ASM ASM
C801 C802 C803 C804 C805	NO-ASM NO-ASM NO-ASM NO-ASM NO-ASM	ASM ASM ASM ASM ASM	ASM ASM ASM ASM ASM
R236	ASM	NO-ASM	NO-ASM

DESIGNER	Y.I	11/21/03
CHECKED	Y.Y	11/21/03
APPROVED	K.T	11/21/03
CLASS	K.T	11/21/03

PART NO. 13R1088

IBM

TITLE ROME-1 RWK(V099)

GIGABIT ETHERNET (2/3)

IBM CONFIDENTIAL

REL	DATE 11/21/03	EC NO. J45843A	PART NO. 13R1088
			DEVELOPMENT NO.
			Q/M 78 /82

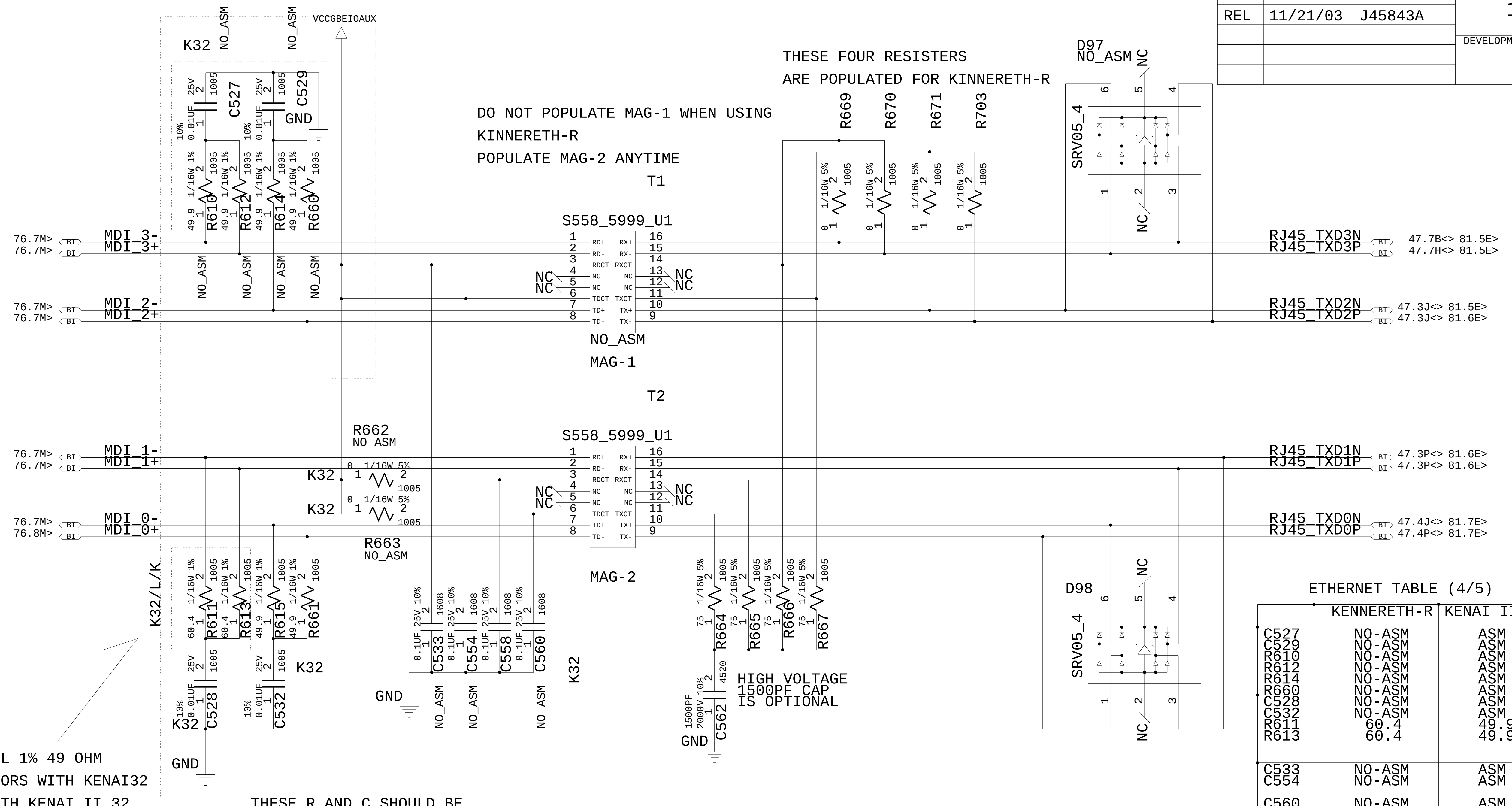
VCCGBEIOAUX
K32
NO_ASM
C527
C529
GND
R610
R612
R614
R660
49.9 1/16W 1% 1005
0.01UF 25V 10% 1005
76.7M>
MDI_3-
MDI_3+
MDI_2-
MDI_2+
MDI_1-
MDI_1+
MDI_0-
MDI_0+
76.8M>
BI
T1
S558_5999_U1
RD+ RX+
RD- RX-
RDCT RXCT
NC
TDCT TXCT
TD+ TX+
TD- TX-
NO_ASM
MAG-1
T2
MAG-2
R662
NO_ASM
R663
0 1/16W 5% 1005
R669
R670
R671
R703
D97
NO_ASM
SRV05_4
NC
D98
RJ45_TXD3N
RJ45_TXD3P
RJ45_TXD2N
RJ45_TXD2P
RJ45_TXD1N
RJ45_TXD1P
RJ45_TXD0N
RJ45_TXD0P
47.7B<> 81.5E>
47.7H<> 81.5E>
47.3J<> 81.5E>
47.3J<> 81.6E>
47.3P<> 81.6E>
47.3P<> 81.6E>
47.4J<> 81.7E>
47.4P<> 81.7E>
K32/L/K
R611
R613
R615
R661
60.4 1/16W 1%
C528
C532
C533
C554
C558
C560
0.1UF 25V 10% 1608
R664
R665
R666
R667
75 1/16W 5% 1005
C562
1500PF 2000V 10% 4520
GND

THESE FOUR RESISTERS
ARE POPULATED FOR KINNERETH-R

DO NOT POPULATE MAG-1 WHEN USING
KINNERETH-R
POPULATE MAG-2 ANYTIME

HIGH VOLTAGE
1500PF CAP
IS OPTIONAL

THESE R AND C SHOULD BE
PLACED NEAR PHY CHIP (KENAI32M,
KENAI2-32 AND KINNERETH-R)

INSTALL 1% 49 OHM
RESISTORS WITH KENAI32
AND WITH KENAI II 32,
OR 1% 60.4 OHM RESISTORS
WITH LAVON AND KINNERETH-R
CONTROLLERS.

ETHERNET TABLE (4/5)

	KENNERETH-R	KENAI II-32	KENAI32M
C527	NO-ASM	ASM	ASM
C529	NO-ASM	ASM	ASM
R610	NO-ASM	ASM	ASM
R612	NO-ASM	ASM	ASM
R614	NO-ASM	ASM	ASM
R660	NO-ASM	ASM	ASM
C528	NO-ASM	ASM	ASM
C532	NO-ASM	ASM	ASM
R611	60.4	49.9	49.9
R613	60.4	49.9	49.9
C533	NO-ASM	ASM	ASM
C554	NO-ASM	ASM	ASM
C560	NO-ASM	ASM	ASM
R662	NO-ASM	ASM	ASM
R663	NO-ASM	ASM	ASM
R669	ASM	NO-ASM	NO-ASM
R670	ASM	NO-ASM	NO-ASM
R671	ASM	NO-ASM	NO-ASM
R703	ASM	NO-ASM	NO-ASM
T1	NO-ASM	ASM	ASM
T2	ASM	ASM	ASM
D97	NO-ASM	ASM	ASM
D98	ASM	ASM	ASM

LOGIC

T1 : S558-599-BD FOR KENAI32M OR KENAI2-32

T2 : S558-599-BD FOR KENAI32M ORKENAI2-32,
S558-599-U1 FOR KINNERETH-R

DESIGNER	Y.I	11/21/03	PART NO. 13R1088
CHECKED	Y.Y	11/21/03	
APPROVED	K.T	11/21/03	TITLE ROME-1 RWK(V099)
CLASS	K.T	11/21/03	GIGABIT ETHERNET (3/3)

THIS DOCUMENT IS THE PROPERTY OF IBM ITS USE IS AUTHORIZED ONLY FOR RESPONDING TO A REQUEST FOR QUOTATION OR FOR THE PERFORMANCE OF WORK FOR IBM. ALL QUESTIONS MUST BE REFERRED TO THE IBM PURCHASING DEPARTMENT.

IBM CONFIDENTIAL

	DATE	EC NO.
REL	11/21/03	J45843A

PART NO.
13R1088

DEVELOPMENT NO.

Q/M
79 /82

LARGE PTH HOLE

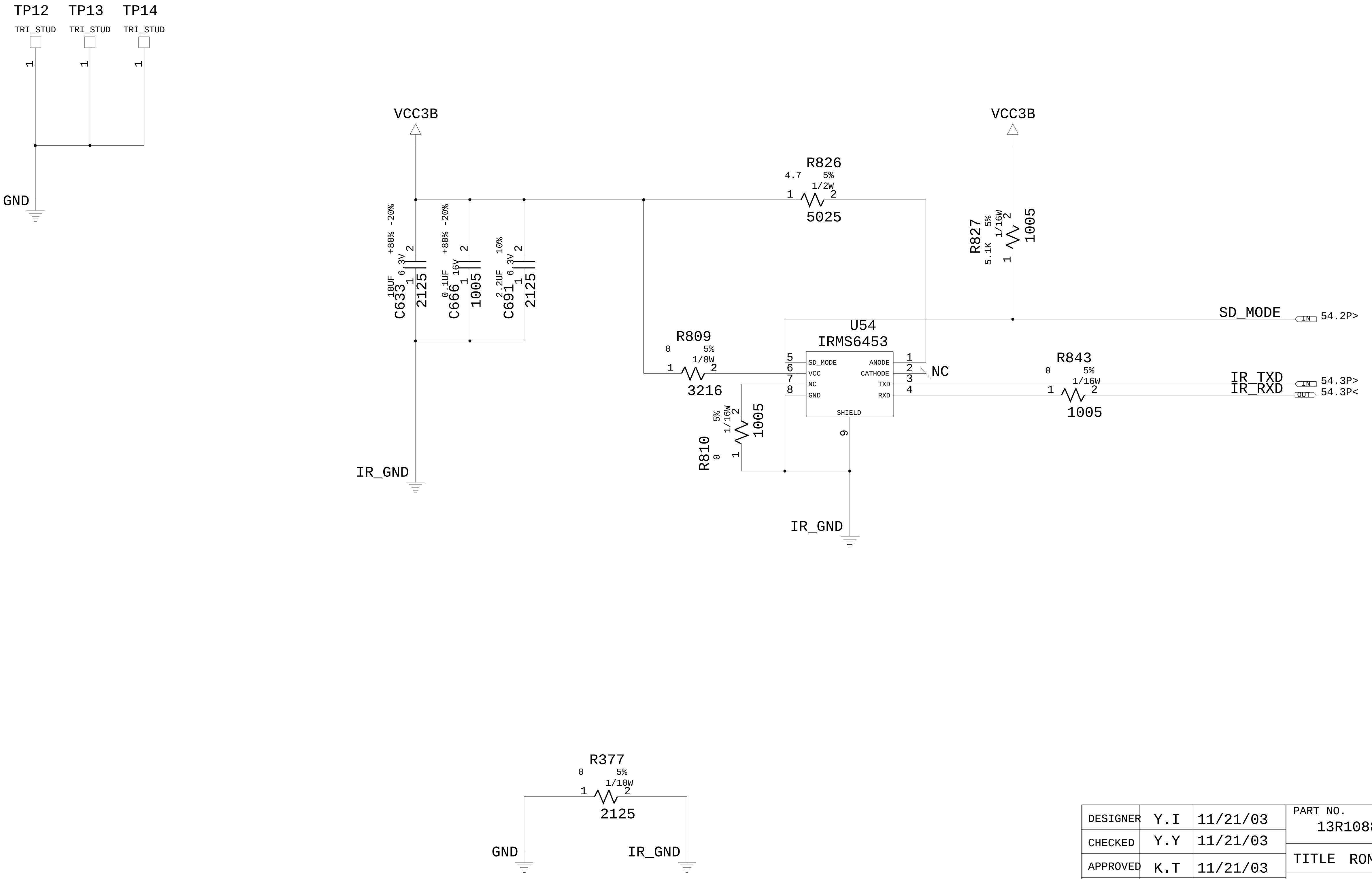
TP12
TP13
TP14
TRI_STUD
TRI_STUD
TRI_STUD
1
1
1
GND
VCC3B
VCC3B
C633
10UF
6.3V
+80% -20%
2125
C666
0.1UF
16V
+80% -20%
1005
C691
2.2UF
6.3V
10%
2125
IR_GND
R826
4.7
5%
1/2W
5025
R827
5.1K
5%
1/16W
1005
SD_MODE
IN
54.2P>
U54
IRMS6453
SD_MODE
VCC
NC
GND
ANODE
CATHODE
TXD
RXD
SHIELD
5
6
7
8
1
2
3
4
9
NC
R809
0
5%
1/8W
3216
R810
0
5%
1/16W
1005
R843
0
5%
1/16W
1005
IR_TXD
IR_RXD
IN
OUT
54.3P>
54.3P<
IR_GND
R377
0
5%
1/10W
2125
GND
IR_GND

DESIGNER	Y.I	11/21/03
CHECKED	Y.Y	11/21/03
APPROVED	K.T	11/21/03
CLASS	K.T	11/21/03

PART NO.
13R1088

IBM

TITLE ROME-1 RWK(V099)

IR MODULE

IBM CONFIDENTIAL

	DATE	EC NO.
REL	11/21/03	J45843A

PART NO. 13R1088

DEVELOPMENT NO.

Q/M 80 /82

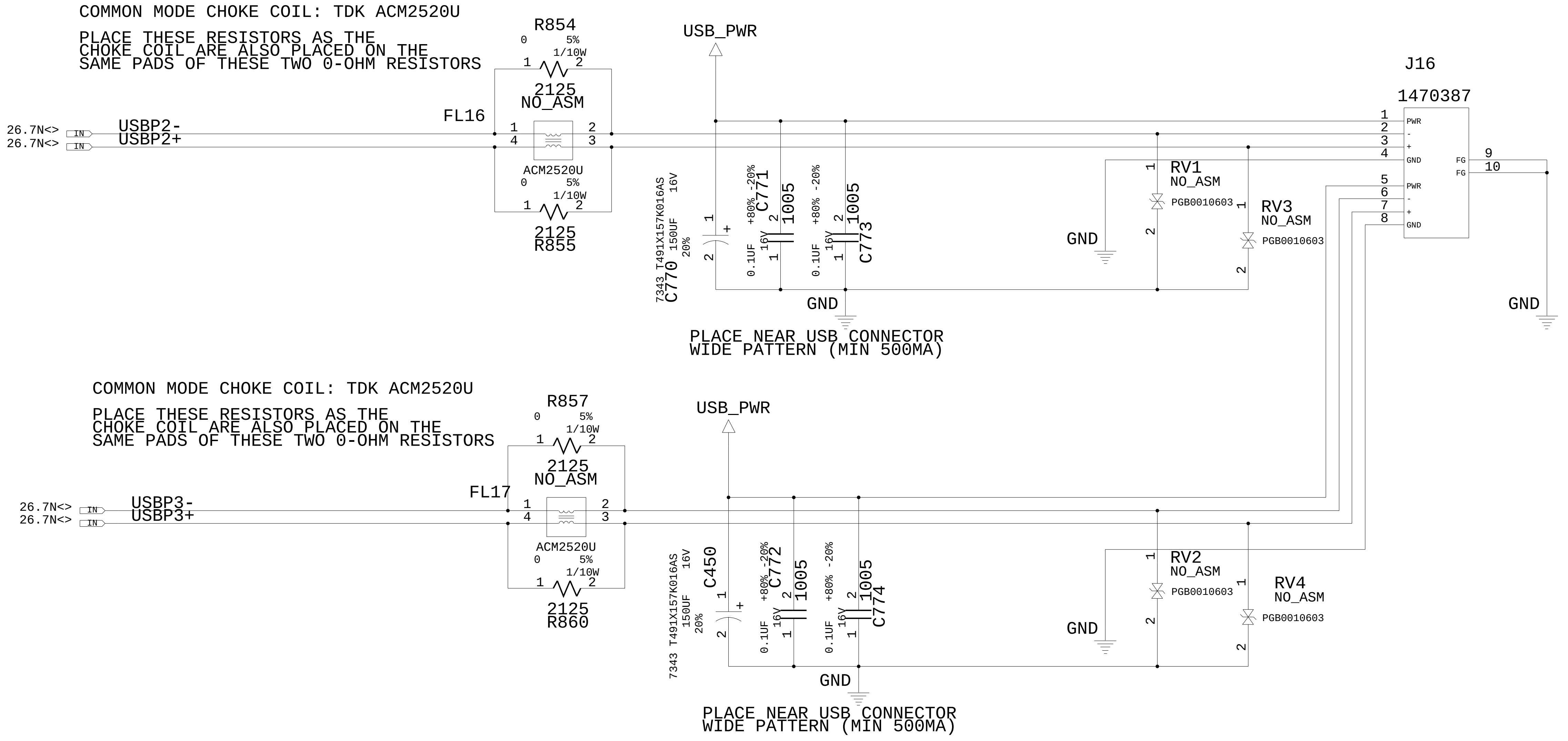

COMMON MODE CHOKE COIL: TDK ACM2520U
PLACE THESE RESISTORS AS THE CHOKE COIL ARE ALSO PLACED ON THE SAME PADS OF THESE TWO 0-OHM RESISTORS
R854
0 5% 1/10W
2125
NO_ASM
FL16
ACM2520U
R855
0 5% 1/10W
2125
26.7N<> IN USBP2-
26.7N<> IN USBP2+
USB_PWR
C770
7343 T491X157K016AS 16V 150UF 20%
C771
0.1UF 16V +80% -20% 1005
C773
0.1UF 16V +80% -20% 1005
GND
PLACE NEAR USB CONNECTOR WIDE PATTERN (MIN 500MA)
RV1
NO_ASM
PGB0010603
RV3
NO_ASM
PGB0010603
GND
J16
1470387
PWR
-
+
GND
PWR
-
+
GND
FG
FG
GND
COMMON MODE CHOKE COIL: TDK ACM2520U
PLACE THESE RESISTORS AS THE CHOKE COIL ARE ALSO PLACED ON THE SAME PADS OF THESE TWO 0-OHM RESISTORS
R857
0 5% 1/10W
2125
NO_ASM
FL17
ACM2520U
R860
0 5% 1/10W
2125
26.7N<> IN USBP3-
26.7N<> IN USBP3+
USB_PWR
C450
7343 T491X157K016AS 16V 150UF 20%
C772
0.1UF 16V +80% -20% 1005
C774
0.1UF 16V +80% -20% 1005
GND
PLACE NEAR USB CONNECTOR WIDE PATTERN (MIN 500MA)
RV2
NO_ASM
PGB0010603
RV4
NO_ASM
PGB0010603
GND

13R1088

DESIGNER	Y.I	11/21/03
CHECKED	Y.Y	11/21/03
APPROVED	K.T	11/21/03
CLASS	K.T	11/21/03

PART NO. 13R1088

IBM

TITLE ROME-1 RWK(V099)

USB CONNECTOR

IBM CONFIDENTIAL

	DATE	EC NO.
REL	11/21/03	J45843A

PART NO. 13R1088

DEVELOPMENT NO.

Q/M 81 /82

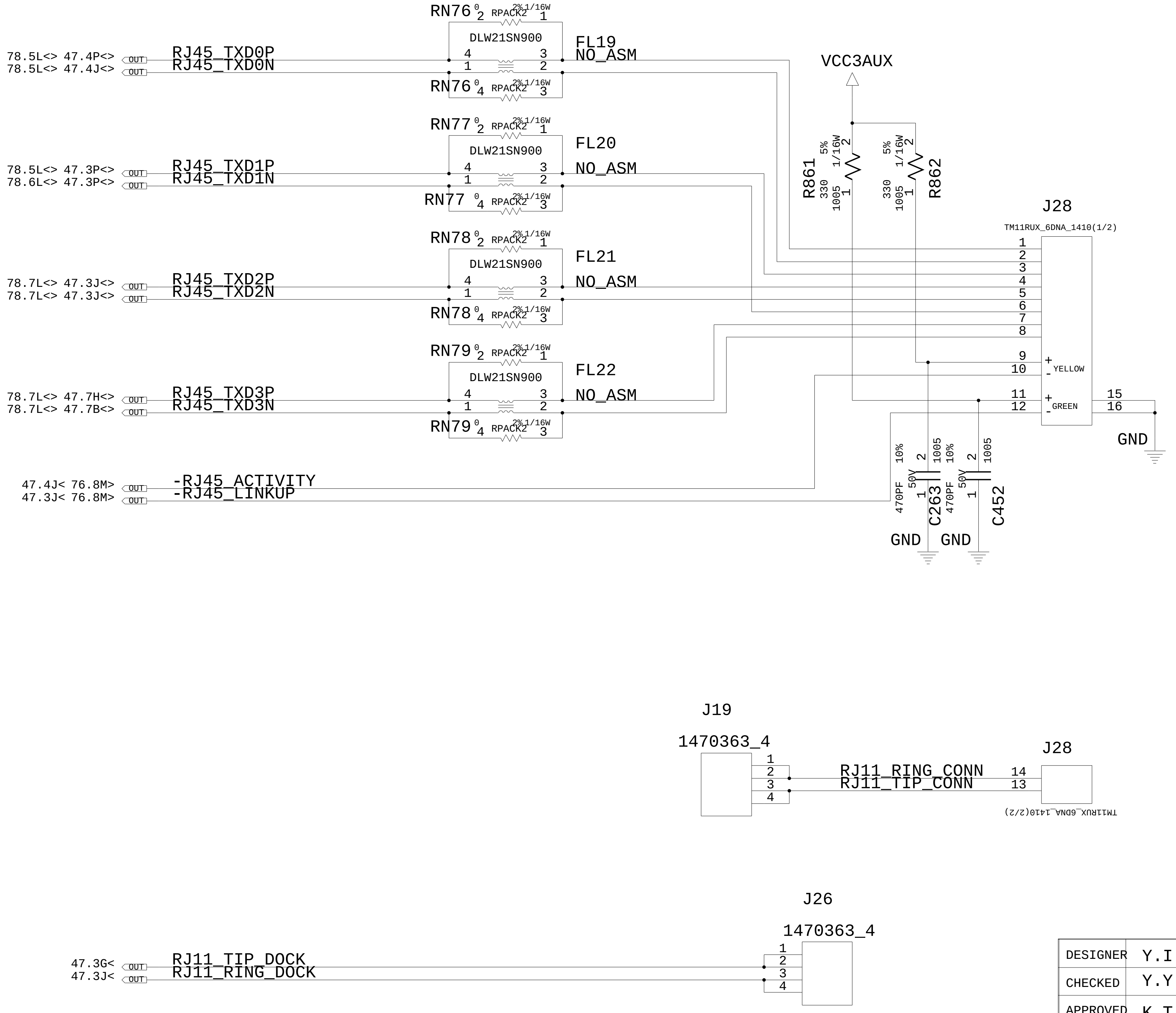

78.5L<> 47.4P<> OUT RJ45_TXD0P
78.5L<> 47.4J<> OUT RJ45_TXD0N
78.5L<> 47.3P<> OUT RJ45_TXD1P
78.6L<> 47.3P<> OUT RJ45_TXD1N
78.7L<> 47.3J<> OUT RJ45_TXD2P
78.7L<> 47.3J<> OUT RJ45_TXD2N
78.7L<> 47.7H<> OUT RJ45_TXD3P
78.7L<> 47.7B<> OUT RJ45_TXD3N
47.4J< 76.8M> OUT -RJ45_ACTIVITY
47.3J< 76.8M> OUT -RJ45_LINKUP
RN76 RN77 RN78 RN79
0 RPACK2 2%1/16W
DLW21SN900
FL19 FL20 FL21 FL22
NO_ASM
VCC3AUX
R861 330 1005 5% 1/16W
R862 330 1005 5% 1/16W
J28
TM11RUX_6DNA_1410(1/2)
YELLOW
GREEN
GND
C263 470PF 10% 50V 1005
C452 470PF 10% 50V 1005
J19
1470363_4
RJ11_RING_CONN
RJ11_TIP_CONN
TM11RUX_6DNA_1410(2/2)
J26
1470363_4
47.3G< OUT RJ11_TIP_DOCK
47.3J< OUT RJ11_RING_DOCK

13R1088

DESIGNER	Y.I	11/21/03
CHECKED	Y.Y	11/21/03
APPROVED	K.T	11/21/03
CLASS	K.T	11/21/03

PART NO. 13R1088

IBM

TITLE ROME-1 RWK(V099)

RJ-45/11 CONNECTOR

IBM CONFIDENTIAL

	DATE	EC NO.
REL	11/21/03	J45843A

PART NO. 13R1088

DEVELOPMENT NO.

Q/M 82 /82

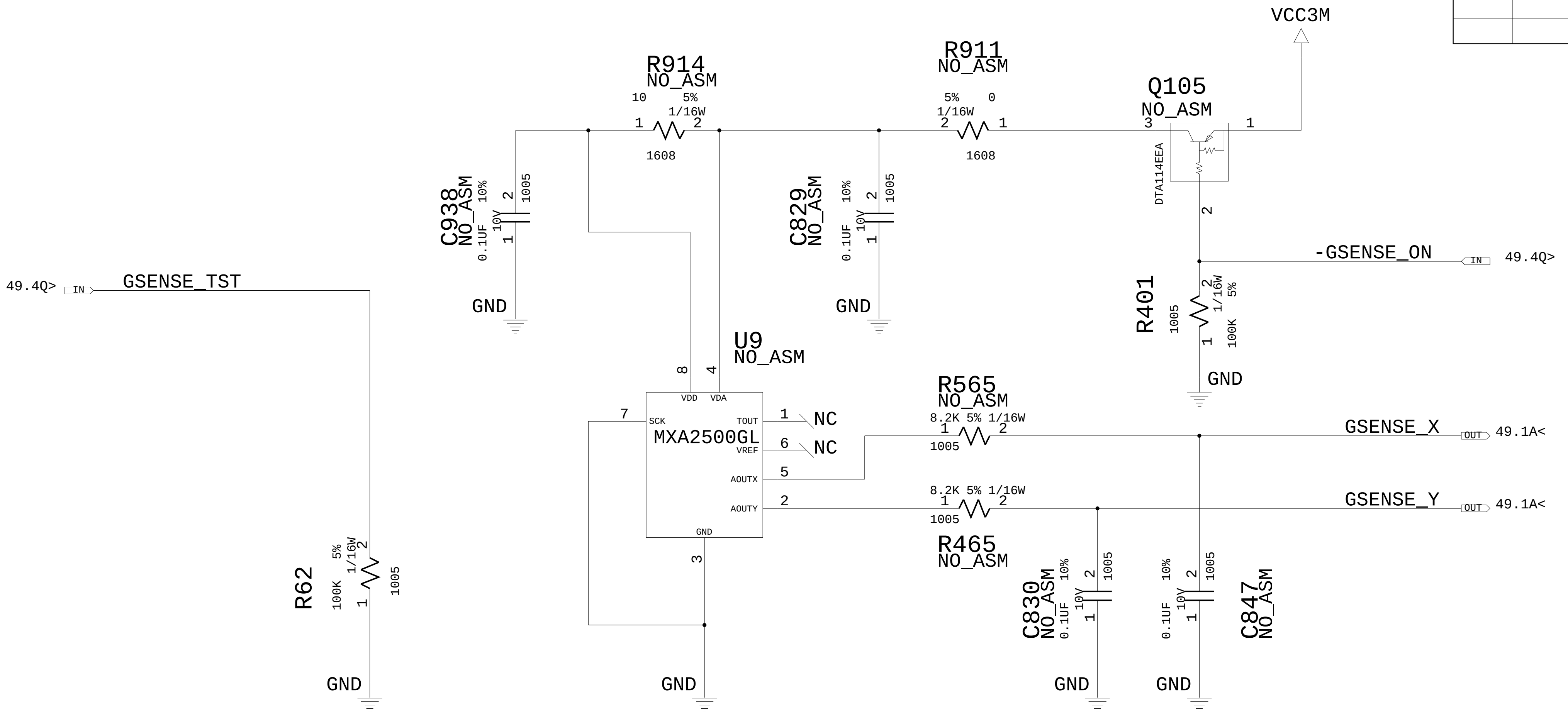
VCC3M
R914
NO_ASM
10 5%
1/16W
1608
R911
NO_ASM
5% 0
1/16W
1608
Q105
NO_ASM
DTA114EEA
C938
NO_ASM
0.1UF 10V 10% 1005
C829
NO_ASM
0.1UF 10V 10% 1005
GND
-GSENSE_ON
49.4Q>
IN
R401
1005
1/16W 5%
100K
49.4Q>
IN
GSENSE_TST
U9
NO_ASM
VDD VDA
SCK
TOUT
VREF
AOUTX
AOUTY
GND
MXA2500GL
NC
NC
R565
NO_ASM
8.2K 5% 1/16W
1005
GSENSE_X
OUT
49.1A<
R465
NO_ASM
8.2K 5% 1/16W
1005
GSENSE_Y
OUT
49.1A<
R62
100K 5% 1/16W
1005
C830
NO_ASM
0.1UF 10V 10% 1005
C847
NO_ASM
0.1UF 10V 10% 1005
GND

MEMSIC ACCELEROMETER TABLE (1/1)

LOGIC

	W/O ACC	WITH ACC
U9	NO-ASM	ASM
R914	NO-ASM	ASM
R911	NO-ASM	ASM
Q105	NO-ASM	ASM
C938	NO-ASM	ASM
C829	NO-ASM	ASM
R565	NO-ASM	ASM
R465	NO-ASM	ASM
C830	NO-ASM	ASM
C847	NO-ASM	ASM
R401	ASM	NO-ASM

DESIGNER	Y.I	11/21/03
CHECKED	Y.Y	11/21/03
APPROVED	K.T	11/21/03
CLASS	K.T	11/21/03

PART NO. 13R1088

IBM

TITLE ROME-1 RWK(V099)

G-SENSOR

IBM CONFIDENTIAL