NOZOMI-3 SWG SDV2 LOGIC SCHEMATICS

NZM3_SWG_SDV2_EC077

1.TITLE PAGE
2.EC HISTORY
3.CPU(1/8) : DMI/EDP/PEG/FDI
4.CPU(2/8) : CLK/MISC/JTAG
5.CPU(3/8) : DDR3 CHANNEL- A
6.CPU(4/8) : DDR3 CHANNEL- B
7.CPU(5/8) : PROCESSOR POWER
8.CPU(6/8) : GRAPHICS POWER
9.CPU(7/8) : GND
10.CPU(8/8) : CFG/RESERVED
11.XDP CONNECTOR
12.DDR3 SO DIMM CHANNEL-A
13.DDR3 SO DIMM CHANNEL-B
14.DDR3 DECOUPLING
15.N12M-NS(1/6) : PEG I/F
16.N12M-NS(2/6) : DIGITAL OUT I/F
17.N12M-NS(3/6) : VRAM I/F
18.N12M-NS(4/6) : GPIO
19.N12M-NS(5/6) : POWER
20.N12M-NS(6/6) : GND
21.VRAM CHANNEL-A
22.DYNAMIC MEMORY TERMINATION
23.PCH(1/9) : HDA/JTAG/SPI/SATA
24.PCH(2/9) : PCI-E/SMBUS/CLK
25.PCH(3/9) : DMI/FDI/PM
26.PCH(4/9) : LVDS/CRT/DDI
27.PCH(5/9) : PCI/USB/NVRAM
28.PCH(6/9) : GPIO/NCTF/RSVD
29.PCH(7/9) : POWER
30.PCH(8/9) : POWER
31.PCH(9/9) : GND
32.LCD CONNECTOR
33.RGB SWITCH
34.EXT CRT INTERFACE

NZM3_SWG_SDV2_EC003

NZM3_SWG_SDV2_EC077

35.DISPLAY PORT CONNECTOR
36.LVDS SWITCH
37.DISPLAY PORT MUX
38.RTC BATTERY
39.SATA HDD CONN
40.SATA BAY I/F CONN
41.ESATA CONNECTOR
42.USB POWER/CONN
43.AUDIO CX20672-11Z
44.AUDIO CONNECTOR
45.AUDIO JACK SENSE
46.AUDIO EXT MIC I/F
47.AUDIO SPEAKER
48.AUDIO BEEP
49.MDC CONNECTOR
50.GBE LEWISVILLE
51.GBE LAN SWITCH
52.GBE MAGNETICS
53.RJ45 CONNECTOR
54.PCIE MINI CARD SLOT
55.1394/MEDIA CARD CONTROLLER
56.MEDIA CARD INTERFACE
57.EXPRESS CARD/SMART CARD I/F
58.SLOT POWER CONTROL
59.SPI FLASH
60.DOCKING CONNECTOR
61.H8S/2113 (1/2)
62.H8S/2113 (2/2)
63.KEYBOARD CONNECTOR
64.TOUCH PAD CONNECTOR
65.WIRELESS DISABLE SW
66.FAN CONNECTOR
67.G-SENSOR
68.THINKER-1
69.TPM

NZM3H-2
VER 2.10
JUNE/08/2010

NZM3_SWG_SDV2_EC077

BASE LOGIC :NZM3 SWG SDV
VER 1.22
APR/26/2010

NZM3_SWG_SDV2_EC077

70.THERMAL SENSOR
71.EEPROM/SMBUS SW
72.DC-IN
73.BATTERY INPUT
74.BATTERY CHARGER(BQ24742)
75.CHARGE SELECTOR
76.BATTERY MONITOR
77.POWER SEQUENCE
78.DC/DC VCC5M/VCC3M(TPS51220ARSNR)
79.DC/DC VCCCPUCORE(VT1316/VT1317)
80.BLANK
81.DC/DC VCCGFXCORE_I(VT1317)
82.VCCCPUCORE DECOUPLING
83.DC/DC VCCGFXCORE_D(ADP3211)
84.DC/DC VCC1R05B_VTT(VT357)
85.DC/DC VCC1R05LAN(VT356)
86.DC/DC VCC1R5A(VT357)
87.DC/DC VCC0R75B(MAX1510)
88.DC/DC VCC1R5VIDEO(BD9139)
89.DC/DC VCC1R8B(TPS62290)
90.DC/DC VCCSA(VT356)
91.DC/DC RINKAN-2
92.LOAD SW LAN
93.LOAD SW VIDEO
94.LOAD SW AMT/ MEPWRG
95.LOAD SW B
96.LOAD SW VCC5MUBAY
97.LOAD SW WAN & WLAN
98.PTH FOR SCREW HOLES
99.BLANK

NZM3_SWG_SDV2_EC077

NZM3_SWG_SDV2_EC066

NZM3_SWG_SDV2_EC077

FLEXComputing

Project Name : NOZOMI-3 SWG SDV2	Title : TITLE PAGE	
Size : C	Document Number :	Rev : 2.10
Date: Monday, June 14, 2010	Sheet : 01 of 99	

EC HISTORY

NOZOMI-3 PRE-DV :BASE LOGIC NZM1 EXT 512MB SIT VER.7.03 12/01/2009

VER.0.01 12/10/2009 APPLIED PDV_EC001
VER.0.02 12/14/2009 APPLIED PDV_EC002-012
VER.0.03 12/15/2009 APPLIED PDV_EC013-025
VER.0.04 12/16/2009 APPLIED PDV_EC026-033
VER.0.05 12/17/2009 APPLIED PDV_EC034-038
VER.0.06 12/18/2009 APPLIED PDV_EC039-041,043-45,047-054
VER.0.07 12/21/2009 APPLIED PDV_EC042,046,055-066
VER.0.08 12/22/2009 APPLIED PDV_EC067-080
VER.0.09 12/24/2009 APPLIED PDV_EC081-085
VER.0.10 12/25/2009 APPLIED PDV_EC086-089
VER.0.11 12/28/2009 APPLIED PDV_EC090-095
VER.0.12 01/06/2010 APPLIED PDV_EC096-112
VER.0.13 01/07/2010 APPLIED PDV_EC113-120
VER.0.14 01/08/2010 APPLIED PDV_EC121
VER.0.15 01/12/2010 APPLIED PDV_EC122
VER.0.16 01/13/2010 APPLIED PDV_EC123-125
VER.0.17 01/14/2010 APPLIED PDV_EC126-128,130
VER.0.18 01/15/2010 APPLIED PDV_EC131-133
VER.0.19 01/18/2010 APPLIED PDV_EC134-137

VER.0.20 01/19/2010 APPLIED PDV_EC138
VER.0.21 01/20/2010 APPLIED PDV_EC139,140
VER.0.22 01/21/2010 APPLIED PDV_EC141-146
VER.0.23 01/22/2010 APPLIED PDV_EC147,148
VER.0.24 01/25/2010 APPLIED PDV_EC149-160
VER.0.25 01/26/2010 APPLIED PDV_EC162-168
VER.0.26 01/27/2010 APPLIED PDV_EC169-176
VER.0.27 01/28/2010 APPLIED PDV_EC177-179
VER.0.28 01/29/2010 APPLIED PDV_EC180
VER.0.29 02/01/2010 APPLIED PDV_EC181-189
VER.0.30 02/02/2010 APPLIED PDV_EC190-193
VER.0.31 02/03/2010 APPLIED PDV_EC194-197
VER.0.32 02/04/2010 APPLIED PDV_EC198-202

NOZOMI-3 SDV :BASE LOGIC NZM3 PRE-DV VER.0.32 02/04/2010
VER.1.00 02/05/2010 APPLIED SDV_EC001-004
VER.1.01 02/08/2010 APPLIED SDV_EC005-007
VER.1.02 02/09/2010 APPLIED SDV_EC010
VER.1.03 02/10/2010 APPLIED SDV_EC011-013
VER.1.04 02/15/2010 APPLIED SDV_EC014
VER.1.05 02/16/2010 APPLIED SDV_EC015-019
VER.1.06 02/17/2010 APPLIED SDV_EC020-022
VER.1.07 02/18/2010 APPLIED SDV_EC024,025,027
VER.1.08 02/19/2010 APPLIED SDV_EC028,030-032
VER.1.09 02/22/2010 APPLIED SDV_EC033-035
VER.1.10 02/23/2010 APPLIED SDV_EC036-038

VER.1.11 03/18/2010 APPLIED SDV_EC045,046
VER.1.12 03/19/2010 APPLIED SDV_EC040-043,CNV_EC061-066
VER.1.13 03/22/2010 APPLIED SDV_EC048-052
VER.1.14 03/24/2010 APPLIED SDV_EC053-059, ECR001-003
VER.1.15 03/26/2010 APPLIED SDV_EC061
VER.1.16 04/1/2010 APPLIED SDV_EC065-075, except SDV_EC069, SDV_EC076-079
VER.1.17 04/6/2010 APPLIED SDV_EC080-084, ECR004, ECR008 and ECR009
VER.1.18 04/8/2010 APPLIED SDV_EC085-091, SDV_ECR010-013
VER.1.19 04/13/2010 APPLIED SDV_EC092-094, change PCB footprint of all resistors from xxx to xxx-R, SDV_EC103 and EC047
VER.1.20 04/16/2010 APPLIED SDV_EC105-110 and ECR023, ECR026 and ECR027
VER.1.21 04/21/2010 APPLIED ECR028
VER.1.22 04/26/2010 APPLIED EC111-113, EC115-117 NZM3_SWG_SDV2_EC077

NOZOMI-3 SWG SDV2 :BASE LOGIC NZM3 SWG SDV VER1.22 04/26/2010 NZM3_SWG_SDV2_EC077
VER.2.00 04/28/2010 APPLIED NZM3_SWG_SDV2_EC003-021
VER.2.01 04/30/2010 APPLIED NZM3_SWG_SDV2_EC022-033
VER.2.02 05/04/2010 APPLIED NZM3_SWG_SDV2_EC035-061
VER.2.03 05/07/2010 APPLIED NZM3_SWG_SDV2_EC062-065
VER.2.04 05/12/2010 APPLIED NZM3_SWG_SDV2_EC066-071
VER.2.05 05/13/2010 APPLIED NZM3_SWG_SDV2_EC072
VER.2.06 05/21/2010 APPLIED NZM3_SWG_SDV2_EC073, EC076 and NZM3_SWG_SDV2_ECR001-003
VER.2.07 05/25/2010 APPLIED NZM3_SWG_SDV2_EC077,EC078, EC079, EC082, EC083, EC084, EC086, EC087, EC088, EC089 and EC095
VER.2.08 06/02/2010 APPLIED NZM3_SWG_SDV2_EC096-EC100, EC104, EC106 and EC107
VER.2.09 06/03/2010 APPLIED NZM3_SWG_SDV2_EC108-EC110
VER.2.10 06/08/2010 APPLIED NZM3_SWG_SDV2_EC105

FLEX Computing

Project Name : NOZOMI-3 SWG SDV2	Title : EC HISTORY	
Size : C	Document Number :	Rev : 2.10
Date: Monday, June 14, 2010	Sheet : 02 of 99	

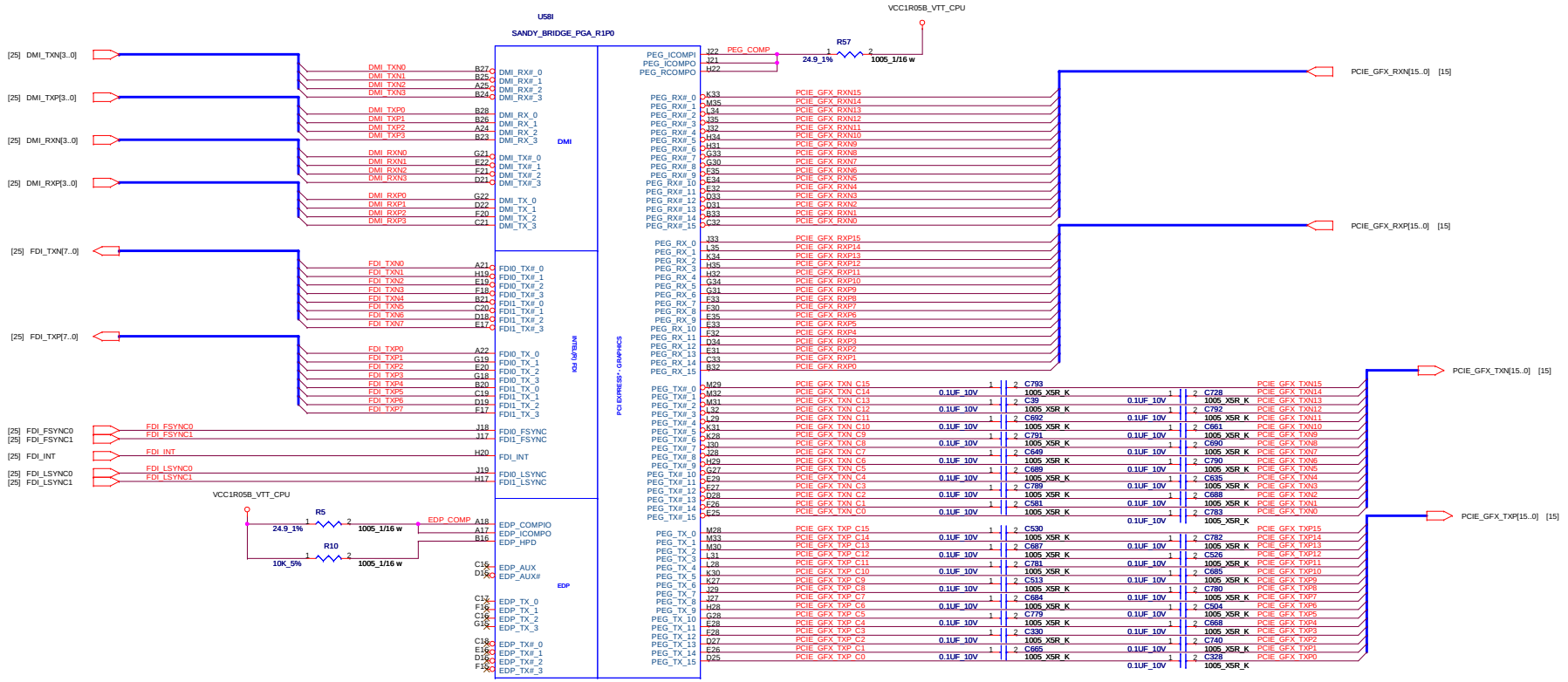
U58I
SANDY_BRIDGE_PGA_R1P0
VCC1R05B_VTT_CPU
R57
24.9_1%
1005_1/16 w
PEG_COMP
[25] DMI_TXN[3..0]
[25] DMI_TXP[3..0]
[25] DMI_RXN[3..0]
[25] DMI_RXP[3..0]
DMI_TXN0
DMI_TXN1
DMI_TXN2
DMI_TXN3
DMI_TXP0
DMI_TXP1
DMI_TXP2
DMI_TXP3
DMI_RXN0
DMI_RXN1
DMI_RXN2
DMI_RXN3
DMI_RXP0
DMI_RXP1
DMI_RXP2
DMI_RXP3
DMI_RX#_0
DMI_RX#_1
DMI_RX#_2
DMI_RX#_3
DMI_RX_0
DMI_RX_1
DMI_RX_2
DMI_RX_3
DMI_TX#_0
DMI_TX#_1
DMI_TX#_2
DMI_TX#_3
DMI_TX_0
DMI_TX_1
DMI_TX_2
DMI_TX_3
DMI
[25] FDI_TXN[7..0]
[25] FDI_TXP[7..0]
FDI_TXN0
FDI_TXN1
FDI_TXN2
FDI_TXN3
FDI_TXN4
FDI_TXN5
FDI_TXN6
FDI_TXN7
FDI_TXP0
FDI_TXP1
FDI_TXP2
FDI_TXP3
FDI_TXP4
FDI_TXP5
FDI_TXP6
FDI_TXP7
FDI0_TX#_0
FDI0_TX#_1
FDI0_TX#_2
FDI0_TX#_3
FDI1_TX#_0
FDI1_TX#_1
FDI1_TX#_2
FDI1_TX#_3
FDI0_TX_0
FDI0_TX_1
FDI0_TX_2
FDI0_TX_3
FDI1_TX_0
FDI1_TX_1
FDI1_TX_2
FDI1_TX_3
FDI
INTEL(R)
[25] FDI_FSYNC0
[25] FDI_FSYNC1
FDI_FSYNC0
FDI_FSYNC1
FDI0_FSYNC
FDI1_FSYNC
[25] FDI_INT
FDI_INT
[25] FDI_LSYNC0
[25] FDI_LSYNC1
FDI_LSYNC0
FDI_LSYNC1
FDI0_LSYNC
FDI1_LSYNC
VCC1R05B_VTT_CPU
R5
24.9_1%
1005_1/16 w
R10
10K_5%
1005_1/16 w
EDP_COMP
EDP_COMPIO
EDP_ICOMPO
EDP_HPD
EDP_AUX
EDP_AUX#
EDP_TX_0
EDP_TX_1
EDP_TX_2
EDP_TX_3
EDP_TX#_0
EDP_TX#_1
EDP_TX#_2
EDP_TX#_3
EDP
PEG_ICOMPI
PEG_ICOMPO
PEG_RCOMPO
PEG_RX#_0
PEG_RX#_1
PEG_RX#_2
PEG_RX#_3
PEG_RX#_4
PEG_RX#_5
PEG_RX#_6
PEG_RX#_7
PEG_RX#_8
PEG_RX#_9
PEG_RX#_10
PEG_RX#_11
PEG_RX#_12
PEG_RX#_13
PEG_RX#_14
PEG_RX#_15
PEG_RX_0
PEG_RX_1
PEG_RX_2
PEG_RX_3
PEG_RX_4
PEG_RX_5
PEG_RX_6
PEG_RX_7
PEG_RX_8
PEG_RX_9
PEG_RX_10
PEG_RX_11
PEG_RX_12
PEG_RX_13
PEG_RX_14
PEG_RX_15
PEG_TX#_0
PEG_TX#_1
PEG_TX#_2
PEG_TX#_3
PEG_TX#_4
PEG_TX#_5
PEG_TX#_6
PEG_TX#_7
PEG_TX#_8
PEG_TX#_9
PEG_TX#_10
PEG_TX#_11
PEG_TX#_12
PEG_TX#_13
PEG_TX#_14
PEG_TX#_15
PEG_TX_0
PEG_TX_1
PEG_TX_2
PEG_TX_3
PEG_TX_4
PEG_TX_5
PEG_TX_6
PEG_TX_7
PEG_TX_8
PEG_TX_9
PEG_TX_10
PEG_TX_11
PEG_TX_12
PEG_TX_13
PEG_TX_14
PEG_TX_15
PCI EXPRESS* - GRAPHICS
PCIE_GFX_RXN[15..0] [15]
PCIE_GFX_RXP[15..0] [15]
PCIE_GFX_TXN[15..0] [15]
PCIE_GFX_TXP[15..0] [15]
0.1UF_10V
1005_X5R_K

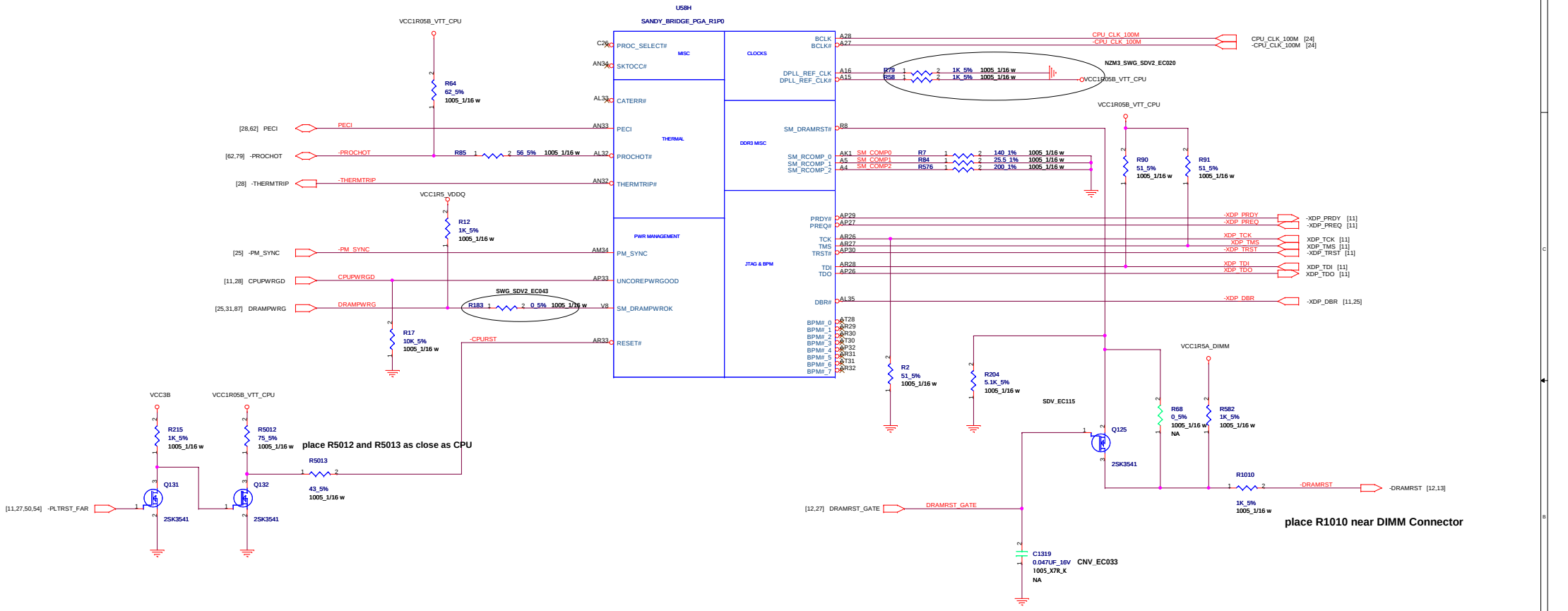

FLEXComputing			
Project Name : NOZOMI-3 SWG SDV2	Title : CPU(2/8) CLK/MISC/JTAG		
Size : C	Document Number :		Rev : 2.10
Date: Monday, June 14, 2010		Sheet : 04 of 99	

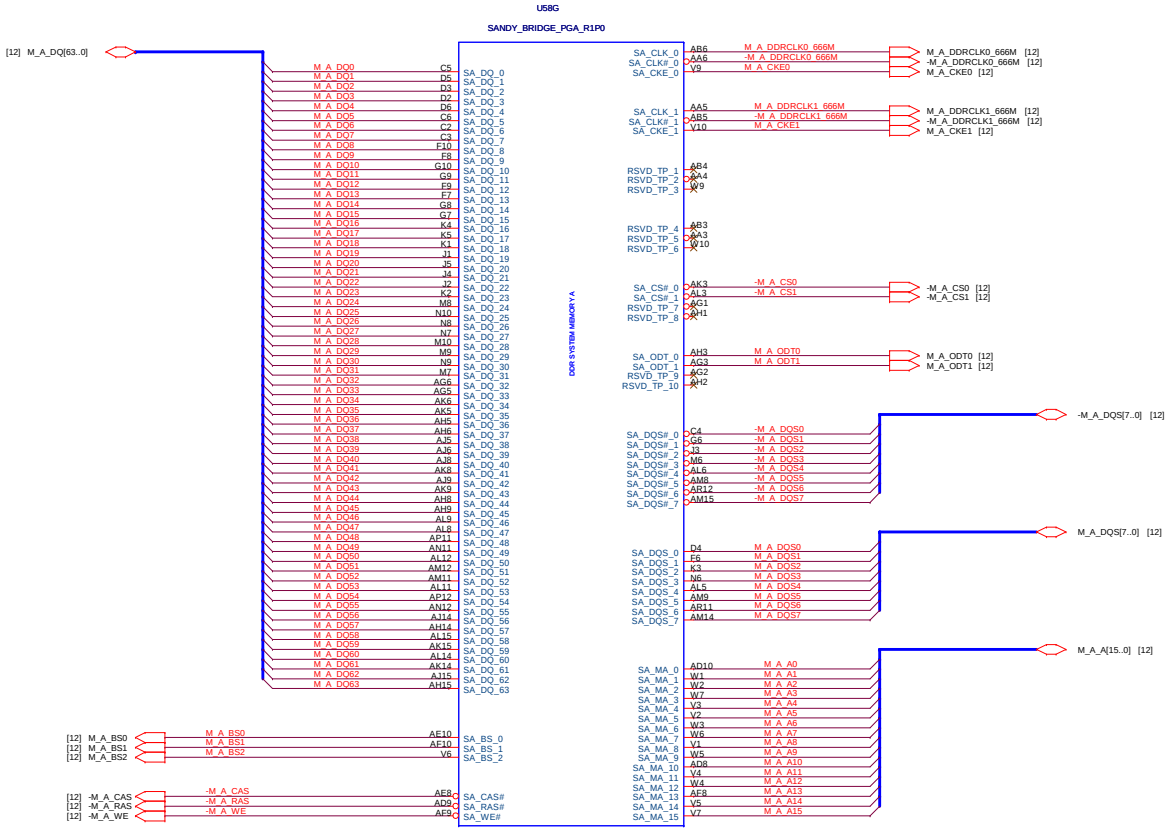

FLEXComputing

Project Name : NOZOMI-3 SWG SDV2	Title : CPU(3/8) DDR3 CH- A	
Size : C	Document Number :	Rev : 2.10
Date: Monday, June 14, 2010	Sheet : 05 of 99	

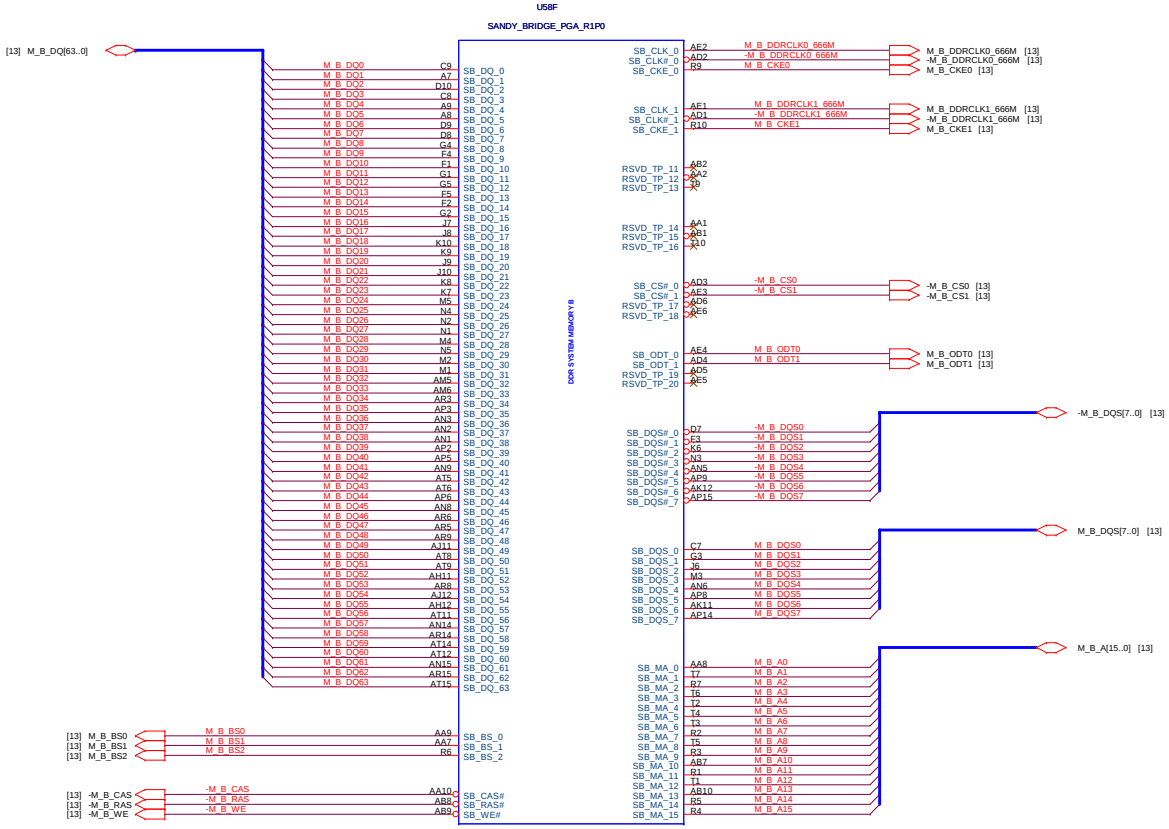

FLEXComputing

Project Name : NOZOMI-3 SWG SDV2	Title : CPU(4/8) DDR3 CH- B
Size : C	Document Number :
Rev : 2.10	
Date: Monday, June 14, 2010	Sheet : 06 of 99

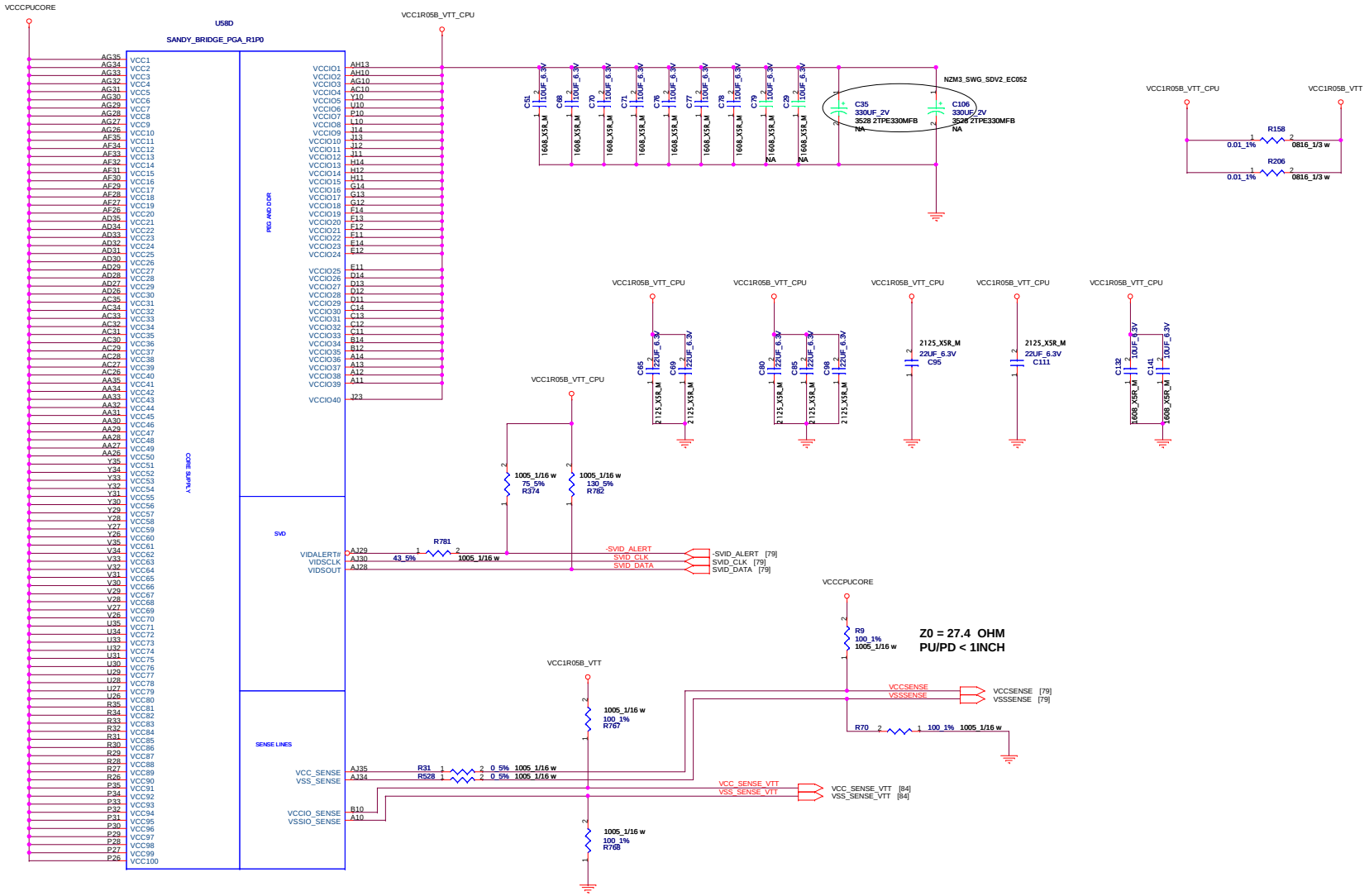

FLEX Computing

Project Name : NOZOMI-3 SWG SDV2	Title : CPU(5/8) PROCESSOR POWER
Size : C	Document Number :
Date: Monday, June 14, 2010	Rev : 2.10
	Sheet : 07 of 99

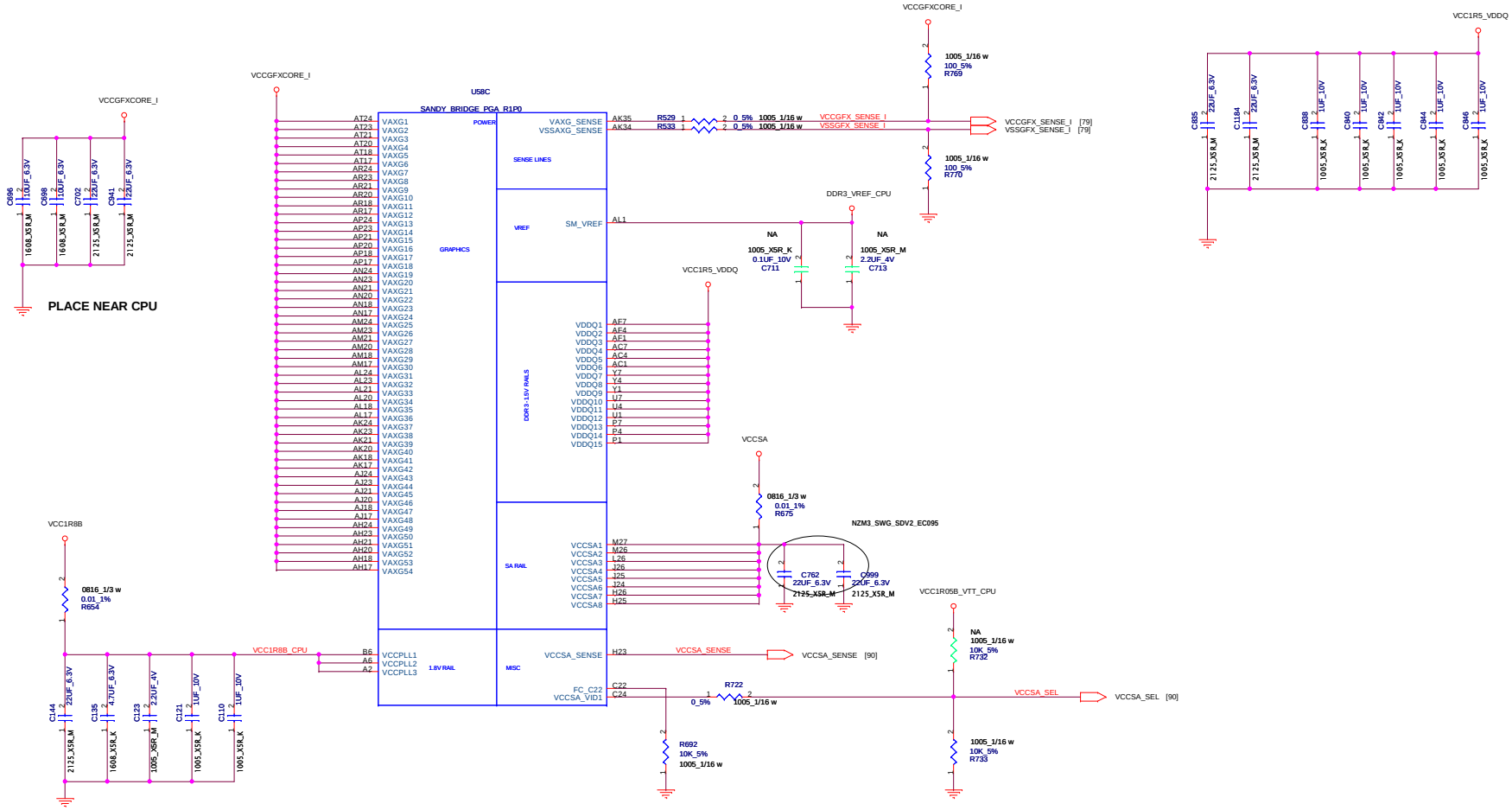

FLEXComputing NZM3_SWG_SDV2_EC077

Project Name : NOZOMI-3 SWG SDV2	Title : CPU(6/8) GRAPHICS POWER
Size : C	Document Number :
Rev : 2.10	
Date: Monday, June 14, 2010	Sheet : 08 of 99

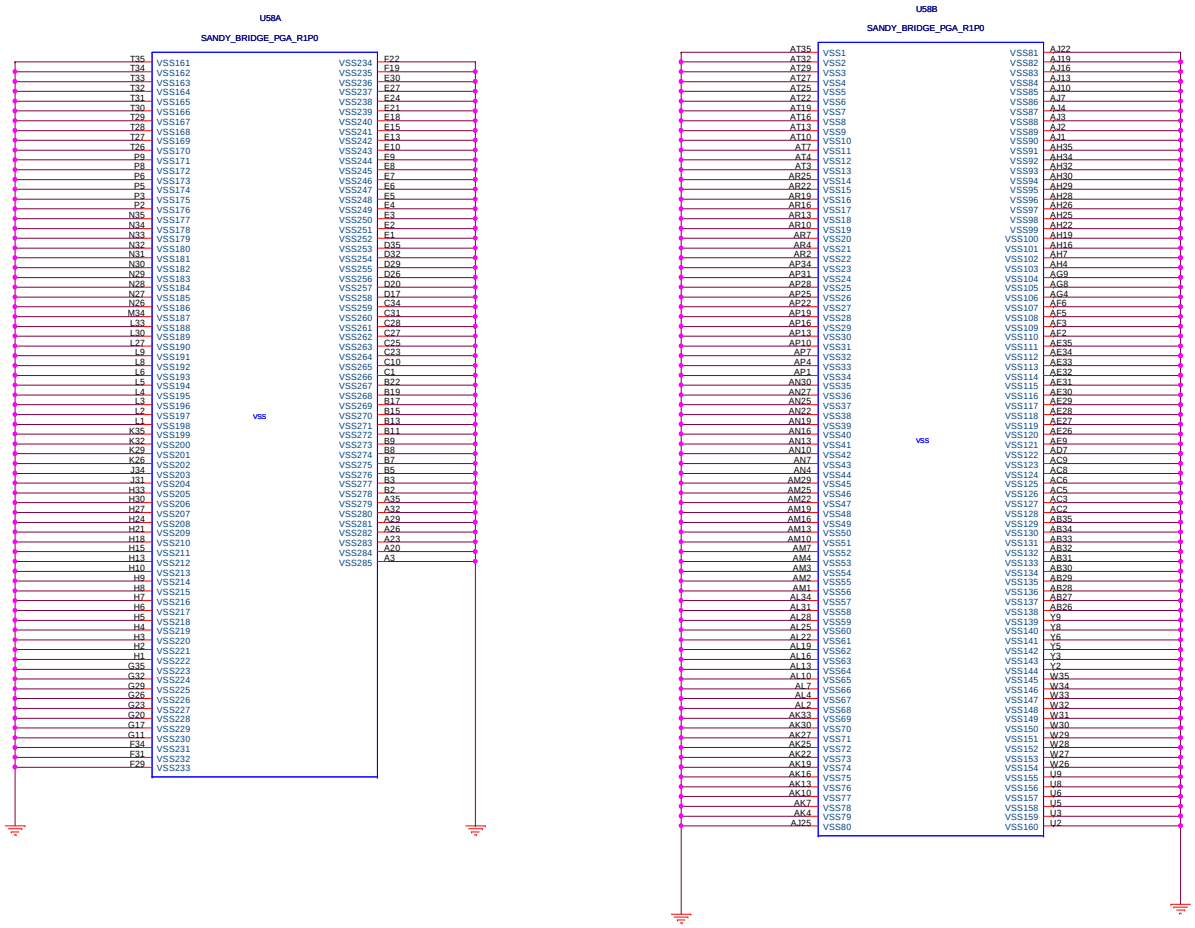

FLEXComputing	
Project Name : NOZOMI-3 SWG SDV2	Title : CPU(7/8) GND
Size : C	Document Number :
	Rev : 2.10
Date: Monday, June 14, 2010	Sheet : 09 of 99

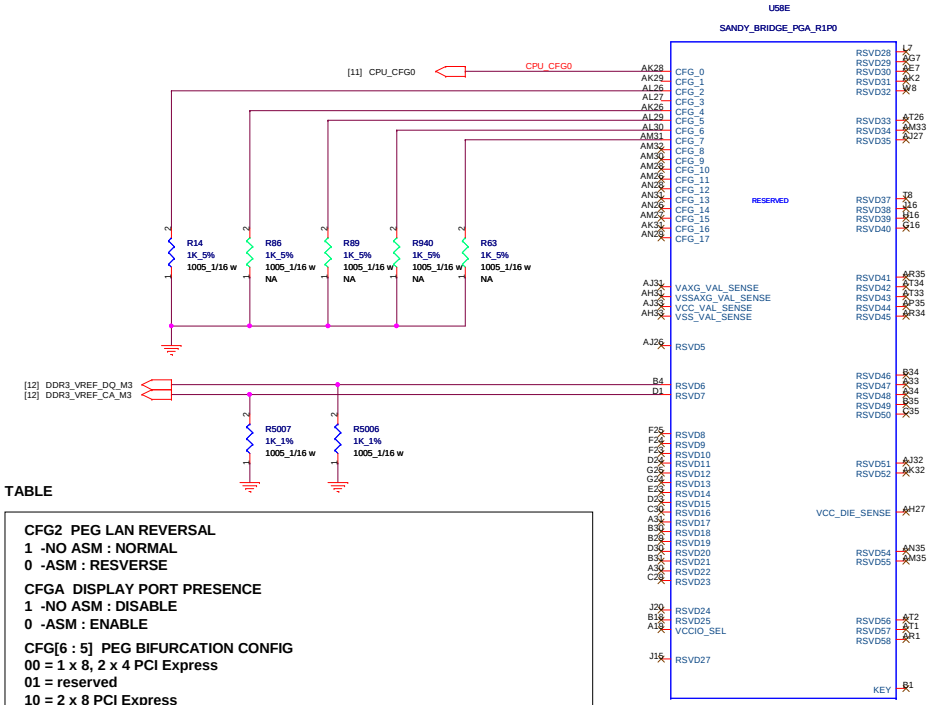

TABLE

CFG2 PEG LAN REVERSAL
1 -NO ASM : NORMAL
0 -ASM : RESVERSE

CFGA DISPLAY PORT PRESENCE
1 -NO ASM : DISABLE
0 -ASM : ENABLE

CFG[6 : 5] PEG BIFURCATION CONFIG
00 = 1 x 8, 2 x 4 PCI Express
01 = reserved
10 = 2 x 8 PCI Express
11 = 1 x 16 PCI Express

CFG7 PEG DEFER TRAINING
1 -NO ASM :PEG TRAIN IMMEDIATELY FOLLOWING XXRESETB DEASSERTION
0 -ASM : PEG WAIT FOR BIOS FOR TRAINING

FLEXComputing NZM3_SWG_SDV2_EC077

Project Name : NOZOMI-3 SWG SDV2	Title : CPU(8/8) CFG/RESERVED
Size : C	Document Number : Rev : 2.10
Date: Monday, June 14, 2010	Sheet : 10 of 99

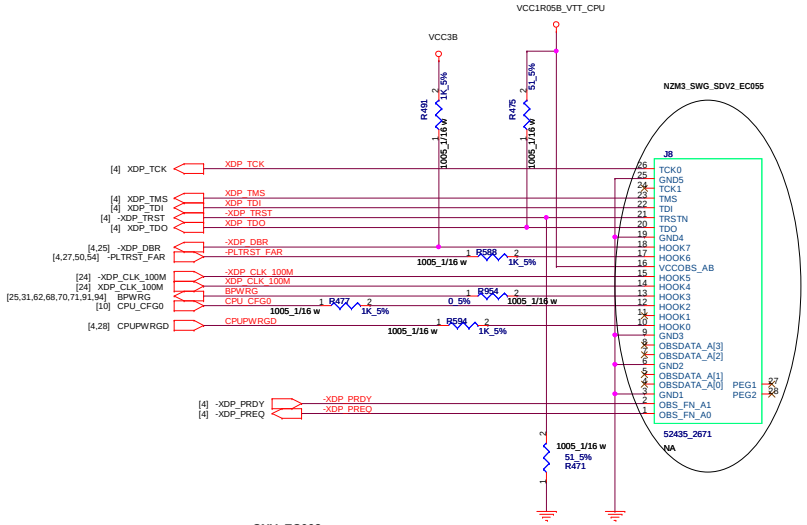

CNV_EC062

TABLE NOTE: J8 "ASM" FOR SDV1 ONLY.

SIGNAL	REF DES	ENABLE	DISABLE
TDO	R475	ASM	NO ASM
TRST#	R471	ASM	ASM
DBRST#	R491	ASM	ASM
RESET#	R588	ASM	NO ASM
CFG0	R477	ASM	NO ASM
PWRGD	R594	ASM	NO ASM
BPWRG	R954	ASM	NO ASM
	J8	ASM	NO ASM

LOGIC

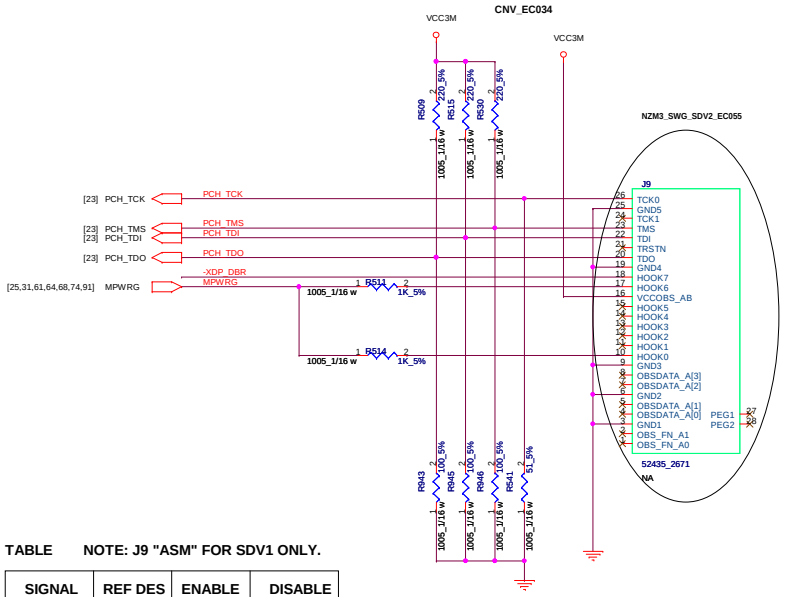

TABLE NOTE: J9 "ASM" FOR SDV1 ONLY.

SIGNAL	REF DES	ENABLE	DISABLE
TDO	R509	200	NO ASM
	R943	100	NO ASM
TMS	R530	220	NO ASM
	R946	100	NO ASM
TDI	R515	220	NO ASM
	R945	100	NO ASM
TCK	R541	51	51
MPWRG	R511	ASM	NO ASM
	R514	ASM	NO ASM
	J9	ASM	NO ASM

LOGIC

FLEXComputing

Project Name : NOZOMI-3 SWG SDV2	Title : XDP CONNECTOR	
Size : C	Document Number :	Rev : 2.10
Date: Monday, June 14, 2010	Sheet : 11 of 99	

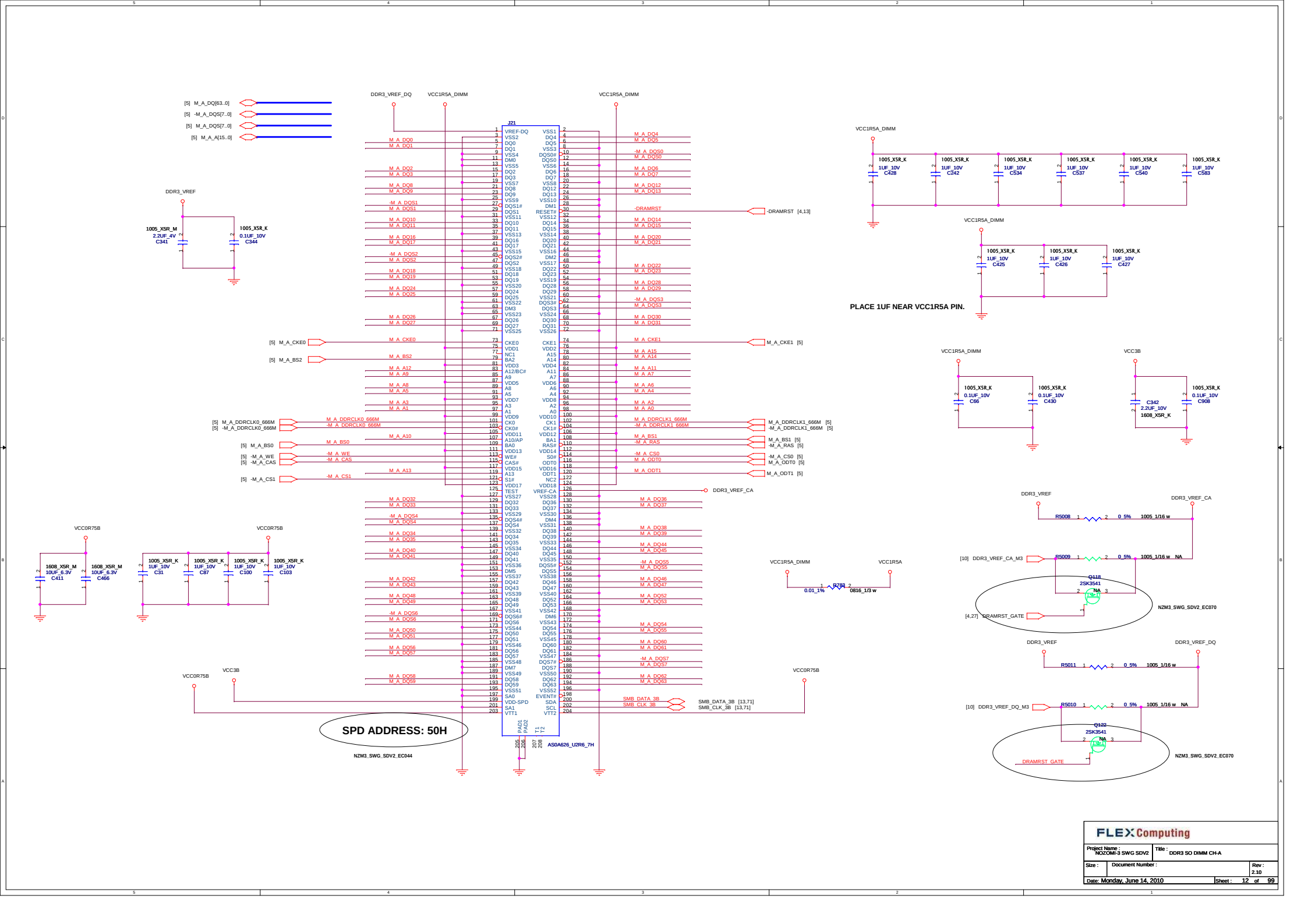
[5] M_A_DQ[63..0]
[5] -M_A_DQS[7..0]
[5] M_A_DQS[7..0]
[5] M_A_A[15..0]
DDR3_VREF_DQ
VCC1R5A_DIMM
VCC1R5A_DIMM
J21
DDR3_VREF
1005_X5R_M 2.2UF_4V C341
1005_X5R_K 0.1UF_10V C344
[5] M_A_CKE0
[5] M_A_BS2
[5] M_A_DDRCLK0_666M
[5] -M_A_DDRCLK0_666M
[5] M_A_BS0
[5] -M_A_WE
[5] -M_A_CAS
[5] -M_A_CS1
M_A_DDRCLK0_666M
-M_A_DDRCLK0_666M
M_A_BS0
-M_A_WE
-M_A_CAS
-M_A_CS1
M_A_CKE1 [5]
M_A_BS1 [5]
-M_A_RAS [5]
-M_A_CS0 [5]
M_A_ODT0 [5]
M_A_ODT1 [5]
M_A_DDRCLK1_666M [5]
-M_A_DDRCLK1_666M [5]
-DRAMRST [4,13]
DDR3_VREF_CA
SMB_DATA_3B
SMB_CLK_3B
SMB_DATA_3B [13,71]
SMB_CLK_3B [13,71]
VCC0R75B
VCC3B
AS0A626_U2R6_7H
SPD ADDRESS: 50H
NZM3_SWG_SDV2_EC044
VCC0R75B
1608_X5R_M 10UF_6.3V C411
1608_X5R_M 10UF_6.3V C466
1005_X5R_K 1UF_10V C31
1005_X5R_K 1UF_10V C87
1005_X5R_K 1UF_10V C100
1005_X5R_K 1UF_10V C103
VCC1R5A_DIMM
VCC1R5A
R788 2 0.01_1% 0816_1/3 w
PLACE 1UF NEAR VCC1R5A PIN.
1005_X5R_K 1UF_10V C428
1005_X5R_K 1UF_10V C242
1005_X5R_K 1UF_10V C534
1005_X5R_K 1UF_10V C537
1005_X5R_K 1UF_10V C540
1005_X5R_K 1UF_10V C583
1005_X5R_K 1UF_10V C425
1005_X5R_K 1UF_10V C426
1005_X5R_K 1UF_10V C427
1005_X5R_K 0.1UF_10V C66
1005_X5R_K 0.1UF_10V C430
C342 2.2UF_10V 1608_X5R_K
1005_X5R_K 0.1UF_10V C908
DDR3_VREF
DDR3_VREF_CA
R5008 1 2 0_5% 1005_1/16 w
[10] DDR3_VREF_CA_M3
R5009 1 2 0_5% 1005_1/16 w NA
Q118 2SK3541 NA
[4,27] DRAMRST_GATE
NZM3_SWG_SDV2_EC070
DDR3_VREF
DDR3_VREF_DQ
R5011 1 2 0_5% 1005_1/16 w
[10] DDR3_VREF_DQ_M3
R5010 1 2 0_5% 1005_1/16 w NA
Q122 2SK3541 NA
DRAMRST_GATE
NZM3_SWG_SDV2_EC070
FLEX Computing
Project Name : NCXCMI-3 SWG SDV2
Title : DDR3 SO DIMM CH-A
Size :
Document Number :
Rev : 2.10
Date: Monday, June 14, 2010
Sheet : 12 of 99

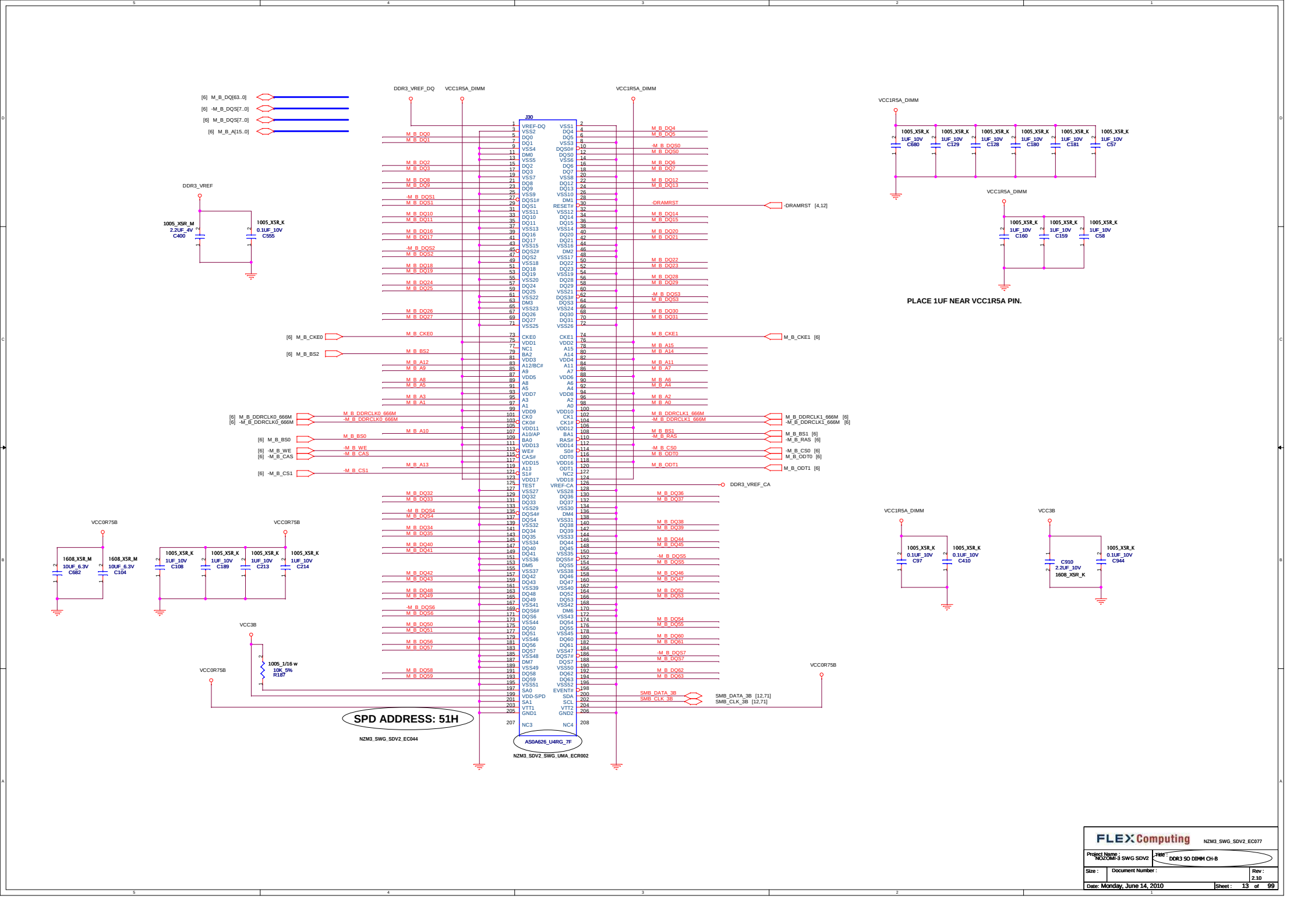

FLEXComputing	NZM3_SWG_SDV2_EC077
Project Name : NOZOMI-3 SWG SDV2	Title : DDR3 SO DIMM CH-B
Size :	Document Number : Rev : 2.10
Date: Monday, June 14, 2010	Sheet : 13 of 99

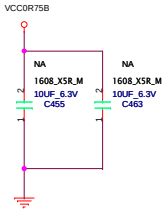

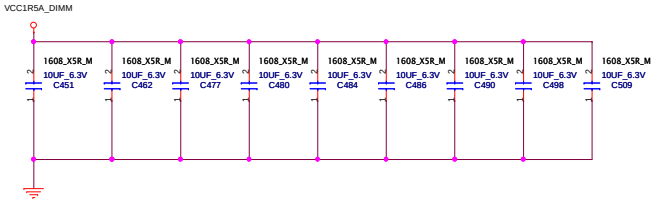

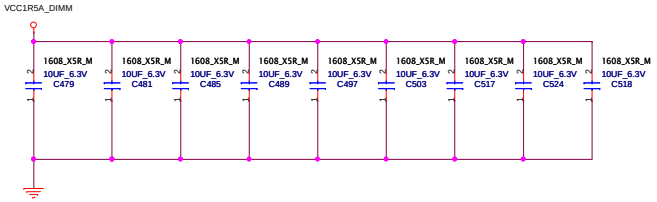

FLEXComputing

Project Name : NOZOMI-3 SWG SDV2	Title : DDR3 DECOUPLING	
Size : C	Document Number :	Rev : 2.10
Date: Monday, June 14, 2010	Sheet : 14 of 99	

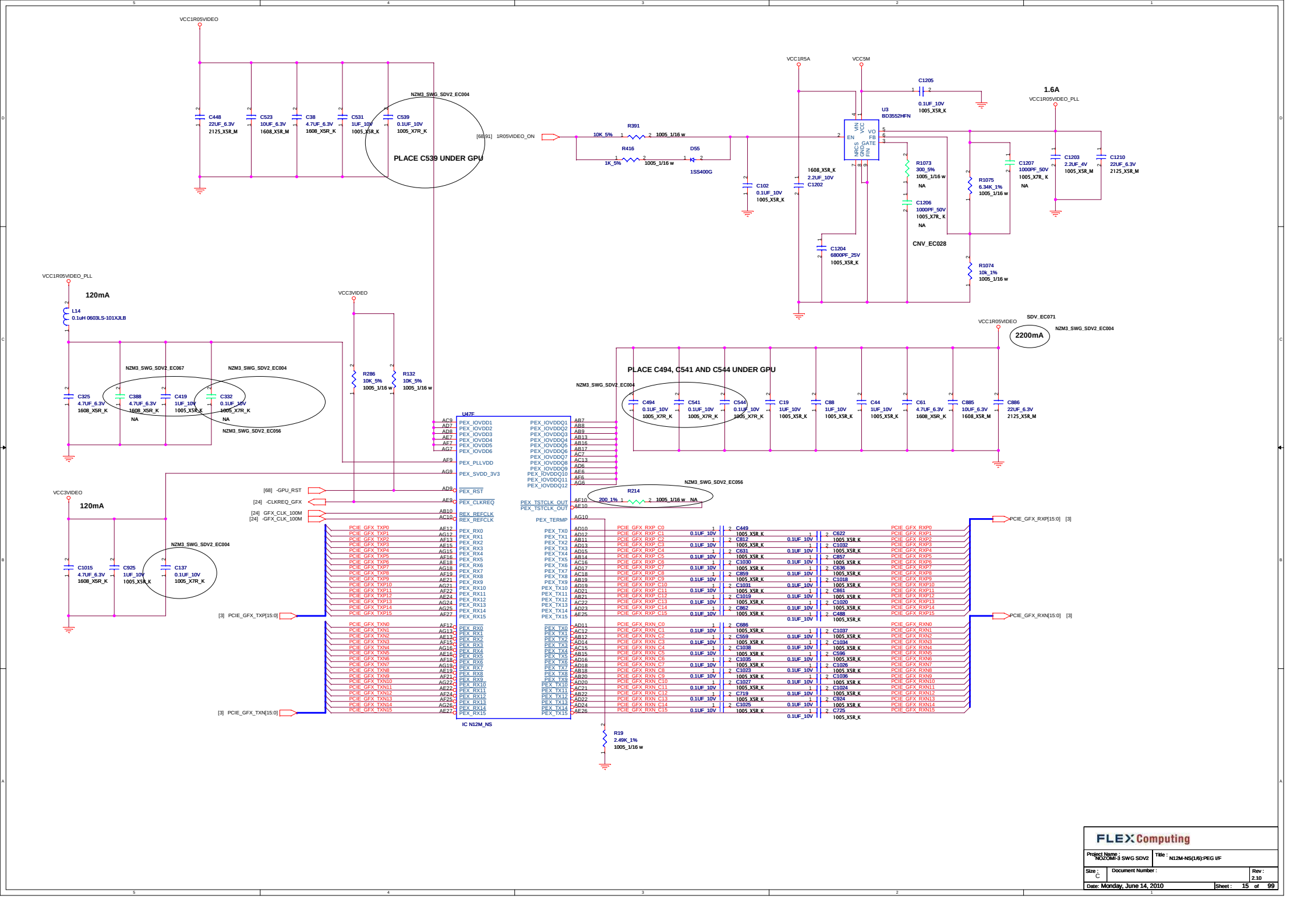
VCC1R05VIDEO
NZM3_SWG_SDV2_EC004
C448 22UF_6.3V 2125_X5R_M
C523 10UF_6.3V 1608_X5R_M
C38 4.7UF_6.3V 1608_X5R_K
C531 1UF_10V 1005_X5R_K
C539 0.1UF_10V 1005_X7R_K
PLACE C539 UNDER GPU
[68][91] 1R05VIDEO_ON
R391 10K_5% 1005_1/16 w
R416 1K_5% 1005_1/16 w
D55 1SS400G
VCC1R5A
VCCSM
C1205 0.1UF_10V 1005_X5R_K
U3 BD3552HFN
VIN VCC EN VO FB GATE SRCS GND FIN
C102 0.1UF_10V 1005_X5R_K
1608_X5R_K
C1202 2.2UF_10V
R1073 300_5% 1005_1/16 w NA
C1206 1000PF_50V 1005_X7R_K NA
CNV_EC028
C1204 6800PF_25V 1005_X5R_K
R1075 6.34K_1% 1005_1/16 w
R1074 10k_1% 1005_1/16 w
C1207 1000PF_50V 1005_X7R_K NA
1.6A
VCC1R05VIDEO_PLL
C1203 2.2UF_4V 1005_X5R_M
C1210 22UF_6.3V 2125_X5R_M
VCC1R05VIDEO_PLL
120mA
L14 0.1uH 0603LS-101XJLB
NZM3_SWG_SDV2_EC067
NZM3_SWG_SDV2_EC004
C325 4.7UF_6.3V 1608_X5R_K
C388 4.7UF_6.3V 1608_X5R_K NA
C419 1UF_10V 1005_X5R_K
C332 0.1UF_10V 1005_X7R_K NA
NZM3_SWG_SDV2_EC056
VCC3VIDEO
R286 10K_5% 1005_1/16 w
R132 10K_5% 1005_1/16 w
VCC1R05VIDEO
SDV_EC071
2200mA
NZM3_SWG_SDV2_EC004
PLACE C494, C541 AND C544 UNDER GPU
NZM3_SWG_SDV2_EC004
C494 0.1UF_10V 1005_X7R_K
C541 0.1UF_10V 1005_X7R_K
C544 0.1UF_10V 1005_X7R_K
C19 1UF_10V 1005_X5R_K
C88 1UF_10V 1005_X5R_K
C44 1UF_10V 1005_X5R_K
C61 4.7UF_6.3V 1608_X5R_K
C885 10UF_6.3V 1608_X5R_M
C886 22UF_6.3V 2125_X5R_M
VCC3VIDEO
120mA
NZM3_SWG_SDV2_EC004
C1015 4.7UF_6.3V 1608_X5R_K
C925 1UF_10V 1005_X5R_K
C137 0.1UF_10V 1005_X7R_K
U47F
PEX_IOVDD1 PEX_IOVDD2 PEX_IOVDD3 PEX_IOVDD4 PEX_IOVDD5 PEX_IOVDD6
PEX_PLLVDD
PEX_SVDD_3V3
PEX_IOVDDQ1 PEX_IOVDDQ2 PEX_IOVDDQ3 PEX_IOVDDQ4 PEX_IOVDDQ5 PEX_IOVDDQ6 PEX_IOVDDQ7 PEX_IOVDDQ8 PEX_IOVDDQ9 PEX_IOVDDQ10 PEX_IOVDDQ11 PEX_IOVDDQ12
[68] -GPU_RST
PEX_RST
[24] -CLKREQ_GFX
PEX_CLKREQ
[24] GFX_CLK_100M
[24] -GFX_CLK_100M
REX_REFCLK
REX_REFCLK
PEX_TSTCLK_OUT
PEX_TSTCLK_OUT
PEX_TERMP
R214 200_1% 1005_1/16 w NA
NZM3_SWG_SDV2_EC056
PEX_RX0 PEX_RX1 PEX_RX2 PEX_RX3 PEX_RX4 PEX_RX5 PEX_RX6 PEX_RX7 PEX_RX8 PEX_RX9 PEX_RX10 PEX_RX11 PEX_RX12 PEX_RX13 PEX_RX14 PEX_RX15
PEX_TX0 PEX_TX1 PEX_TX2 PEX_TX3 PEX_TX4 PEX_TX5 PEX_TX6 PEX_TX7 PEX_TX8 PEX_TX9 PEX_TX10 PEX_TX11 PEX_TX12 PEX_TX13 PEX_TX14 PEX_TX15
IC N12M_NS
PCIE_GFX_TXP0 PCIE_GFX_TXP1 PCIE_GFX_TXP2 PCIE_GFX_TXP3 PCIE_GFX_TXP4 PCIE_GFX_TXP5 PCIE_GFX_TXP6 PCIE_GFX_TXP7 PCIE_GFX_TXP8 PCIE_GFX_TXP9 PCIE_GFX_TXP10 PCIE_GFX_TXP11 PCIE_GFX_TXP12 PCIE_GFX_TXP13 PCIE_GFX_TXP14 PCIE_GFX_TXP15
[3] PCIE_GFX_TXP[15:0]
PCIE_GFX_TXN0 PCIE_GFX_TXN1 PCIE_GFX_TXN2 PCIE_GFX_TXN3 PCIE_GFX_TXN4 PCIE_GFX_TXN5 PCIE_GFX_TXN6 PCIE_GFX_TXN7 PCIE_GFX_TXN8 PCIE_GFX_TXN9 PCIE_GFX_TXN10 PCIE_GFX_TXN11 PCIE_GFX_TXN12 PCIE_GFX_TXN13 PCIE_GFX_TXN14 PCIE_GFX_TXN15
[3] PCIE_GFX_TXN[15:0]
PCIE_GFX_RXP C0 C1 C2 C3 C4 C5 C6 C7 C8 C9 C10 C11 C12 C13 C14 C15
C449 C812 C1032 C631 C857 C1030 C636 C859 C1018 C1031 C861 C1019 C1020 C862 C488
PCIE_GFX_RXP0 PCIE_GFX_RXP1 PCIE_GFX_RXP2 PCIE_GFX_RXP3 PCIE_GFX_RXP4 PCIE_GFX_RXP5 PCIE_GFX_RXP6 PCIE_GFX_RXP7 PCIE_GFX_RXP8 PCIE_GFX_RXP9 PCIE_GFX_RXP10 PCIE_GFX_RXP11 PCIE_GFX_RXP12 PCIE_GFX_RXP13 PCIE_GFX_RXP14 PCIE_GFX_RXP15
PCIE_GFX_RXP[15:0] [3]
PCIE_GFX_RXN C0 C1 C2 C3 C4 C5 C6 C7 C8 C9 C10 C11 C12 C13 C14 C15
C686 C559 C1034 C1038 C596 C1035 C1026 C1023 C1036 C1027 C1024 C719 C924 C1025 C725
PCIE_GFX_RXN0 PCIE_GFX_RXN1 PCIE_GFX_RXN2 PCIE_GFX_RXN3 PCIE_GFX_RXN4 PCIE_GFX_RXN5 PCIE_GFX_RXN6 PCIE_GFX_RXN7 PCIE_GFX_RXN8 PCIE_GFX_RXN9 PCIE_GFX_RXN10 PCIE_GFX_RXN11 PCIE_GFX_RXN12 PCIE_GFX_RXN13 PCIE_GFX_RXN14 PCIE_GFX_RXN15
PCIE_GFX_RXN[15:0] [3]
R19 2.49K_1% 1005_1/16 w
FLEX Computing
Project Name : NOZOMI-3 SWG SDV2
Title : N12M-NS(1/6):PEG I/F
Size : C
Document Number :
Rev : 2.10
Date: Monday, June 14, 2010
Sheet : 15 of 99

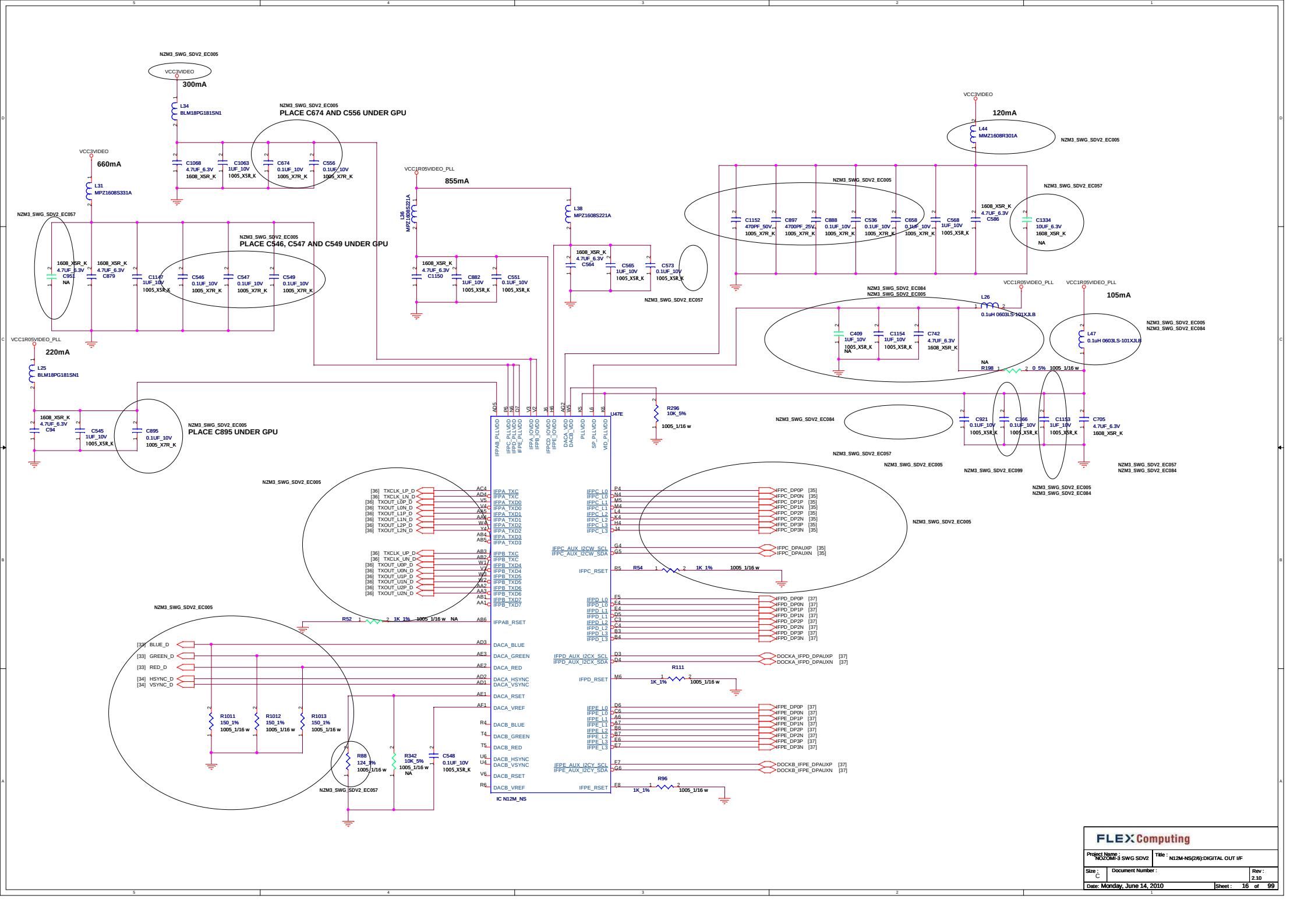
NZM3_SWG_SDV2_EC005
VCC3VIDEO
300mA
L34
BLM18PG181SN1
PLACE C674 AND C556 UNDER GPU
C1068 4.7UF_6.3V 1608_X5R_K
C1063 1UF_10V 1005_X5R_K
C674 0.1UF_10V 1005_X7R_K
C556 0.1UF_10V 1005_X7R_K
VCC3VIDEO
660mA
L31
MPZ1608S331A
NZM3_SWG_SDV2_EC057
PLACE C546, C547 AND C549 UNDER GPU
C852 1608_X5R_K 4.7UF_6.3V NA
C879 1608_X5R_K 4.7UF_6.3V
C1147 1UF_10V 1005_X5R_K
C546 0.1UF_10V 1005_X7R_K
C547 0.1UF_10V 1005_X7R_K
C549 0.1UF_10V 1005_X7R_K
VCC1R05VIDEO_PLL
220mA
L25
BLM18PG181SN1
C94 1608_X5R_K 4.7UF_6.3V
C545 1UF_10V 1005_X5R_K
PLACE C895 UNDER GPU
C895 0.1UF_10V 1005_X7R_K
VCC1R05VIDEO_PLL
855mA
L36
MPZ1608S221A
L38
MPZ1608S221A
C1150 1608_X5R_K 4.7UF_6.3V
C882 1UF_10V 1005_X5R_K
C551 0.1UF_10V 1005_X5R_K
C564 1608_X5R_K 4.7UF_6.3V
C565 1UF_10V 1005_X5R_K
C573 0.1UF_10V 1005_X5R_K
NZM3_SWG_SDV2_EC057
VCC3VIDEO
120mA
L44
MMZ1608R301A
NZM3_SWG_SDV2_EC005
C1152 470PF_50V 1005_X7R_K
C897 4700PF_25V 1005_X7R_K
C888 0.1UF_10V 1005_X7R_K
C536 0.1UF_10V 1005_X7R_K
C558 0.1UF_10V 1005_X7R_K
C568 1UF_10V 1005_X5R_K
C586 1608_X5R_K 4.7UF_6.3V
NZM3_SWG_SDV2_EC057
C1334 10UF_6.3V 1608_X5R_K NA
NZM3_SWG_SDV2_EC084
NZM3_SWG_SDV2_EC005
VCC1R05VIDEO_PLL
L26
0.1uH 0603LS-101XJLB
C409 1UF_10V 1005_X5R_K NA
C1154 1UF_10V 1005_X5R_K
C742 4.7UF_6.3V 1608_X5R_K
VCC1R05VIDEO_PLL
105mA
L47
0.1uH 0603LS-101XJLB
NZM3_SWG_SDV2_EC005
NZM3_SWG_SDV2_EC084
NA
R198 0_5% 1005_1/16 w
C921 0.1UF_10V 1005_X5R_K
C366 0.1UF_10V 1005_X5R_K
C1153 1UF_10V 1005_X5R_K
C705 4.7UF_6.3V 1608_X5R_K
NZM3_SWG_SDV2_EC099
NZM3_SWG_SDV2_EC057
NZM3_SWG_SDV2_EC084
U47E
IFPAB_PLLVDD
IFPC_PLLVDD
IFPD_PLLVDD
IFPE_PLLVDD
IFPA_IOVDD
IFPB_IOVDD
IFPCD_IOVDD
IFPE_IOVDD
DACA_VDD
DACB_VDD
PLLVDD
SP_PLLVDD
VID_PLLVDD
R296 10K_5% 1005_1/16 w
NZM3_SWG_SDV2_EC005
[36] TXCLK_LP_D
[36] TXCLK_LN_D
[36] TXOUT_L0P_D
[36] TXOUT_L0N_D
[36] TXOUT_L1P_D
[36] TXOUT_L1N_D
[36] TXOUT_L2P_D
[36] TXOUT_L2N_D
IFPA_TXC
IFPA_TXD0
IFPA_TXD1
IFPA_TXD2
IFPA_TXD3
[36] TXCLK_UP_D
[36] TXCLK_UN_D
[36] TXOUT_U0P_D
[36] TXOUT_U0N_D
[36] TXOUT_U1P_D
[36] TXOUT_U1N_D
[36] TXOUT_U2P_D
[36] TXOUT_U2N_D
IFPB_TXC
IFPB_TXD4
IFPB_TXD5
IFPB_TXD6
IFPB_TXD7
IFPC_L0
IFPC_L1
IFPC_L2
IFPC_L3
IFPC_DP0P [35]
IFPC_DP0N [35]
IFPC_DP1P [35]
IFPC_DP1N [35]
IFPC_DP2P [35]
IFPC_DP2N [35]
IFPC_DP3P [35]
IFPC_DP3N [35]
IFPC_AUX_I2CW_SCL
IFPC_AUX_I2CW_SDA
IFPC_DPAUXP [35]
IFPC_DPAUXN [35]
IFPC_RSET
R54 1K_1% 1005_1/16 w
NZM3_SWG_SDV2_EC005
IFPD_L0
IFPD_L1
IFPD_L2
IFPD_L3
IFPD_DP0P [37]
IFPD_DP0N [37]
IFPD_DP1P [37]
IFPD_DP1N [37]
IFPD_DP2P [37]
IFPD_DP2N [37]
IFPD_DP3P [37]
IFPD_DP3N [37]
IFPD_AUX_I2CX_SCL
IFPD_AUX_I2CX_SDA
DOCKA_IFPD_DPAUXP [37]
DOCKA_IFPD_DPAUXN [37]
IFPD_RSET
R111 1K_1% 1005_1/16 w
NZM3_SWG_SDV2_EC005
[33] BLUE_D
[33] GREEN_D
[33] RED_D
[34] HSYNC_D
[34] VSYNC_D
R52 1K_1% 1005_1/16 w NA
IFPAB_RSET
DACA_BLUE
DACA_GREEN
DACA_RED
DACA_HSYNC
DACA_VSYNC
DACA_RSET
DACA_VREF
R1011 150_1% 1005_1/16 w
R1012 150_1% 1005_1/16 w
R1013 150_1% 1005_1/16 w
DACB_BLUE
DACB_GREEN
DACB_RED
DACB_HSYNC
DACB_VSYNC
DACB_RSET
DACB_VREF
R88 124_1% 1005_1/16 w
NZM3_SWG_SDV2_EC057
R342 10K_5% 1005_1/16 w NA
C548 0.1UF_10V 1005_X5R_K
IFPE_L0
IFPE_L1
IFPE_L2
IFPE_L3
IFPE_DP0P [37]
IFPE_DP0N [37]
IFPE_DP1P [37]
IFPE_DP1N [37]
IFPE_DP2P [37]
IFPE_DP2N [37]
IFPE_DP3P [37]
IFPE_DP3N [37]
IFPE_AUX_I2CY_SCL
IFPE_AUX_I2CY_SDA
DOCKB_IFPE_DPAUXP [37]
DOCKB_IFPE_DPAUXN [37]
IFPE_RSET
R96 1K_1% 1005_1/16 w
IC N12M_NS
FLEX Computing
Project Name : NOZOMI-3 SWG SDV2
Title : N12M-NS(2/6):DIGITAL OUT I/F
Size : C
Document Number :
Rev : 2.10
Date: Monday, June 14, 2010
Sheet : 16 of 99

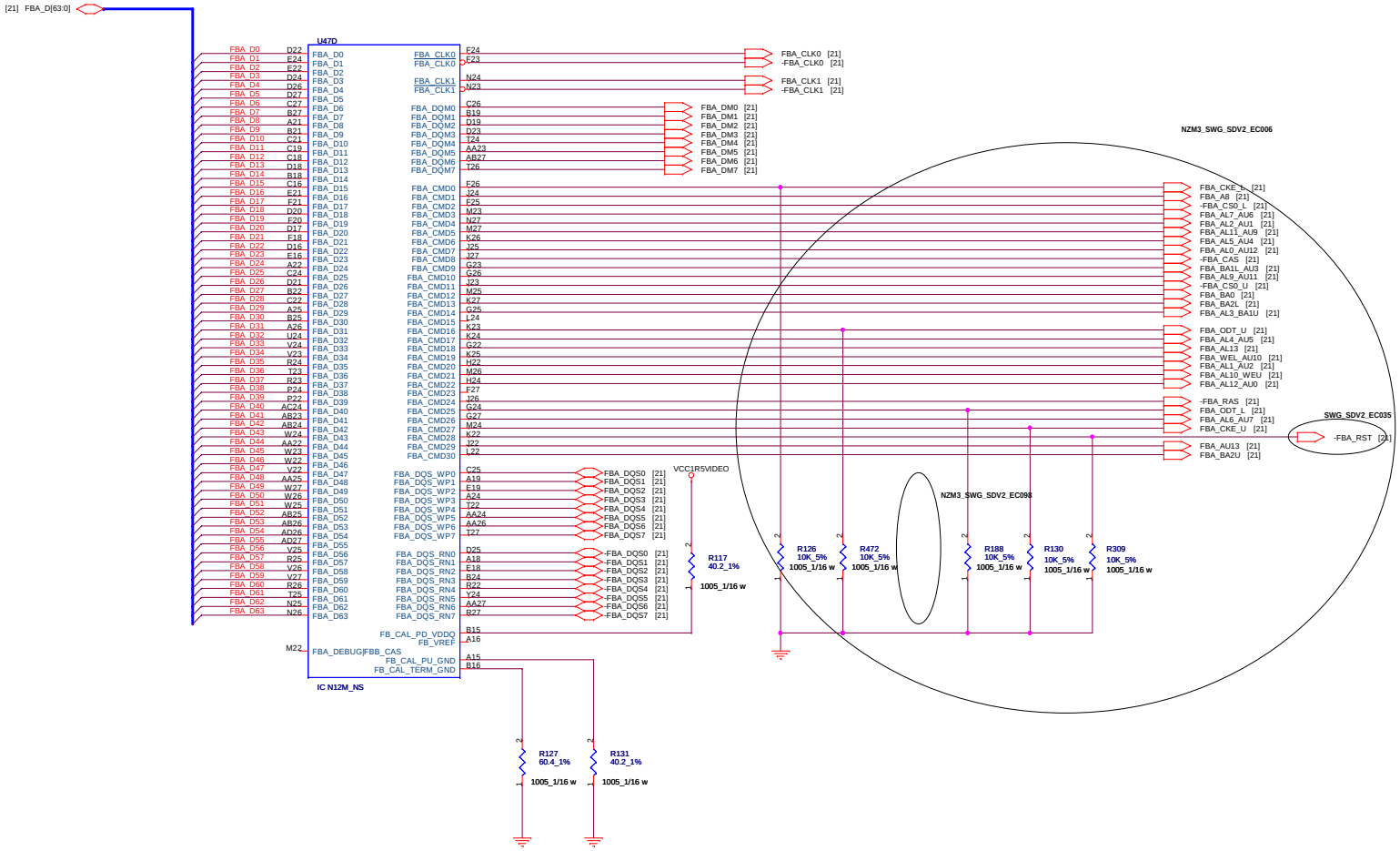

FLEX Computing — NZM3_SWG_SDV2_EC077

Project Name : NOZOMI-3 SWG SDV2	Title : N12M-NS(3/6):VRAM I/F	
Size : C	Document Number :	Rev : 2.10
Date: Monday, June 14, 2010	Sheet : 17 of 99	

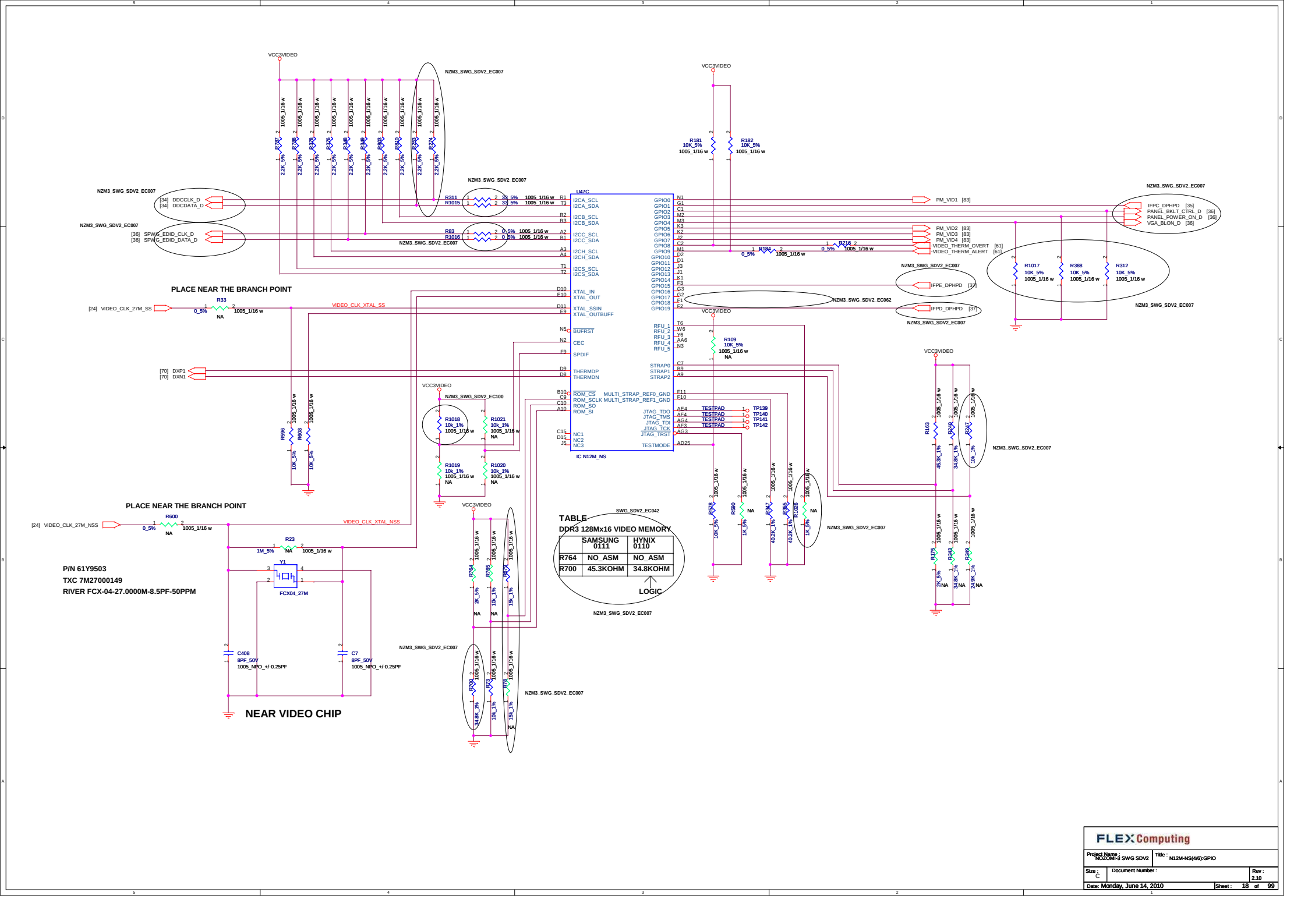
VCC3VIDEO
NZM3_SWG_SDV2_EC007
U47C
IC N12M_NS
PLACE NEAR THE BRANCH POINT
PLACE NEAR THE BRANCH POINT
NEAR VIDEO CHIP
P/N 61Y9503
TXC 7M27000149
RIVER FCX-04-27.0000M-8.5PF-50PPM
FCX04_27M
TABLE
DDR3 128Mx16 VIDEO MEMORY
SAMSUNG 0111
HYNIX 0110
R764 NO_ASM NO_ASM
R700 45.3KOHM 34.8KOHM
LOGIC
SWG_SDV2_EC042
NZM3_SWG_SDV2_EC100
NZM3_SWG_SDV2_EC062
FLEX Computing
Project Name : NOZOMI-3 SWG SDV2
Title : N12M-NS(4/6):GPIO
Size : C
Document Number :
Rev : 2.10
Date: Monday, June 14, 2010
Sheet : 18 of 99

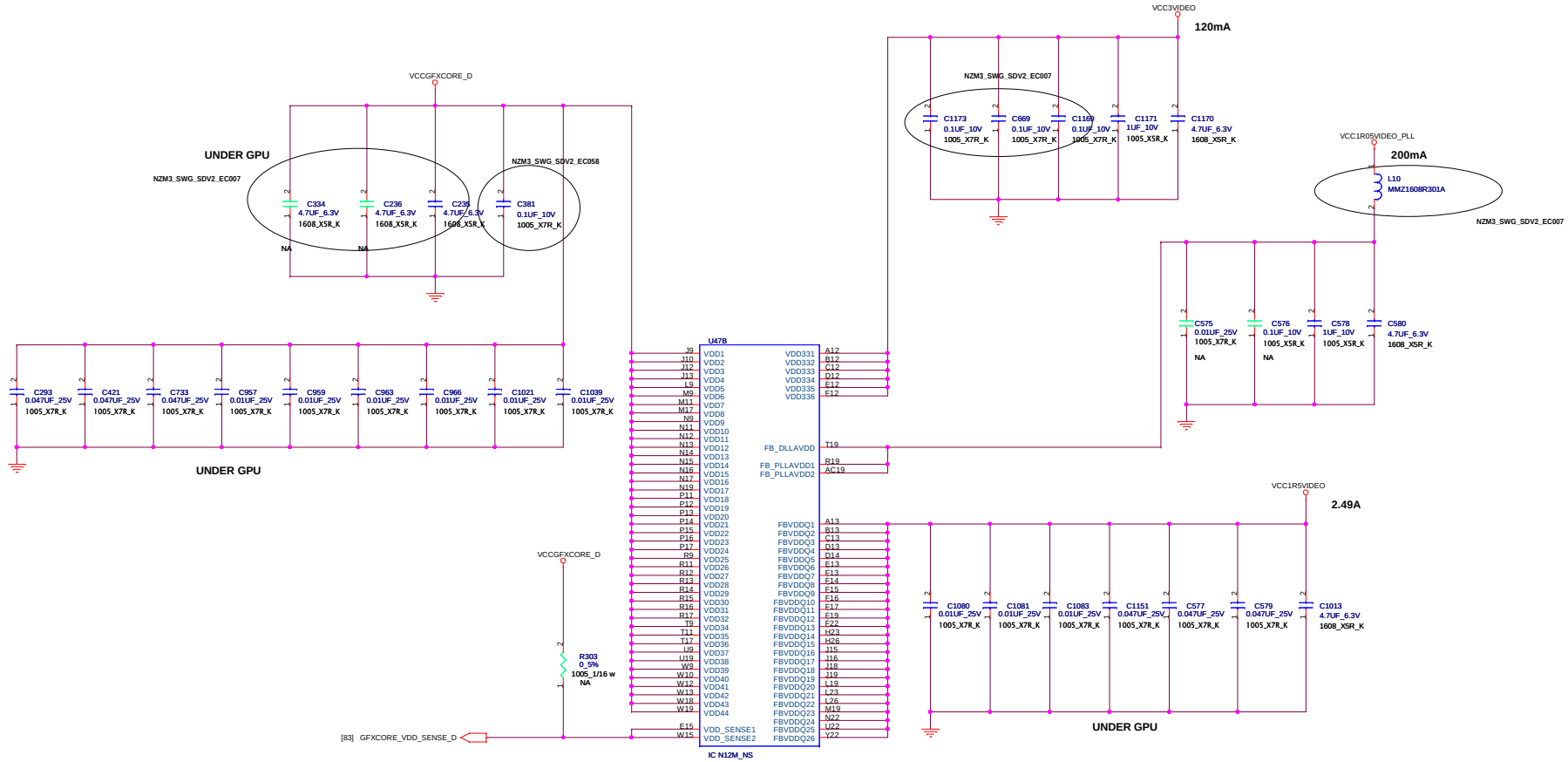

FLEXComputing

Project Name : NOZOMI-3 SWG SDV2	Title : N12M-NS(5/6):POWER
Size : C	Document Number :
Date: Monday, June 14, 2010	Sheet : 19 of 99
	Rev : 2.10

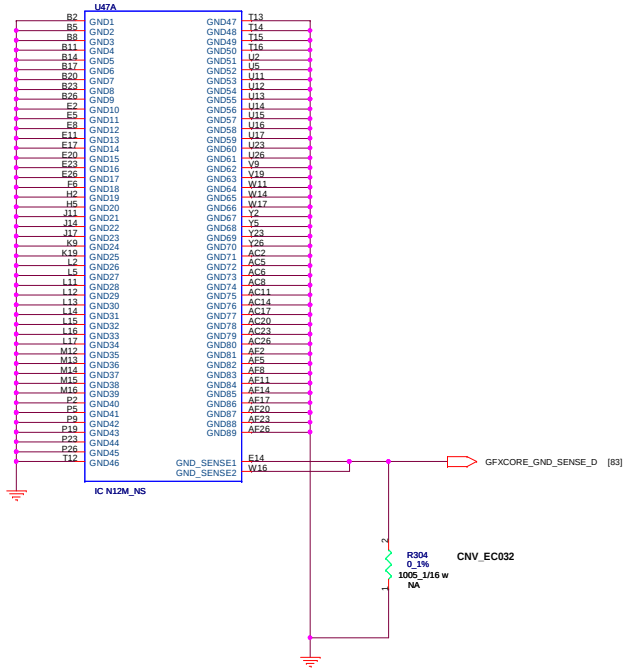

FLEX Computing

Project Name : NOZOMI-3 SWG SDV2	Title : N12M-NS(6/6):GND	
Size : C	Document Number :	Rev : 2.10
Date: Monday, June 14, 2010	Sheet : 20 of 99	

[17] FBA_D[63:0]

FBA_CLK0 — R441 243_1% 1005_1/16 w — -FBA_CLK0

FBA_CLK1 — R306 243_1% 1005_1/16 w — -FBA_CLK1

TABLE
DDR3 VIDEO MEMORY

	HYNIX 2GBITS (128MX16)	SAMSUNG 2GBITS (128MX16)
U1 U44 U46 U54	H5TQ2G63BFR-12C	K4W2G1646C-HC11

LOGIC

VCC1R5VIDEO

[22] VREF0_0

(TOP/LEFT SIDE M0)

U1 — H5TQ1G63BFR-12C

SWAPPING AT 20100601

[17] FBA_DQS3 / [17] -FBA_DQS3 — [17] FBA_DM3 — [17] FBA_DQS0 / [17] -FBA_DQS0 — [17] FBA_DM0 — [17] FBA_CLK0 / [17] -FBA_CLK0 — [17] FBA_CKE_L

[17] -FBA_CS0_L — [17] -FBA_RAS — [17] -FBA_CAS — [17] FBA_WEL_AU10 — [17] FBA_BA2L — [17] FBA_BA1L_AU3 — [17] FBA_BA0

[17] FBA_AL13 — [17] FBA_AL12_AU0 — [17] FBA_AL11_AU9 — [17] FBA_AL10_WEU — [17] FBA_AL9_AU11 — [17] FBA_A8

[17] FBA_AL7_AU6 — [17] FBA_AL6_AU7 — [17] FBA_AL5_AU4 — [17] FBA_AL4_AU5 — [17] FBA_AL3_BA1U — [17] FBA_AL2_AU1 — [17] FBA_AL1_AU2 — [17] FBA_AL0_AU12

FBA_ODT_L [17] — -FBA_RST [17]

NZM3_SWG_SDV2_EC010

R393 243_1% 1005_1/16 w

(BOTTOM/LEFT SIDE M1)

U44 — H5TQ1G63BFR-12C

SWAPPING AT 20100601

[17] FBA_DQS1 / [17] -FBA_DQS1 — [17] FBA_DM1 — [17] FBA_DQS2 / [17] -FBA_DQS2 — [17] FBA_DM2 — FBA_CLK0 / -FBA_CLK0 — FBA_CKE_L

-FBA_CS0_L — -FBA_RAS — -FBA_CAS — FBA_WEL_AU10 — FBA_BA2L — FBA_BA1L_AU3 — FBA_BA0

FBA_AL13 — FBA_AL12_AU0 — FBA_AL11_AU9 — FBA_AL10_WEU — FBA_AL9_AU11 — FBA_A8

FBA_AL7_AU6 — FBA_AL6_AU7 — FBA_AL5_AU4 — FBA_AL4_AU5 — FBA_AL3_BA1U — FBA_AL2_AU1 — FBA_AL1_AU2 — FBA_AL0_AU12

FBA_ODT_L — -FBA_RST

NZM3_SWG_SDV2_EC010

R190 243_1% 1005_1/16 w

(TOP/RIGHT SIDE M2)

LOGIC VCC1R5VIDEO

[22] VREF1_0

U46 — H5TQ1G63BFR-12C

SWAPPING AT 20100601

[17] FBA_DQS6 / [17] -FBA_DQS6 — [17] FBA_DM6 — [17] FBA_DQS4 / [17] -FBA_DQS4 — [17] FBA_DM4 — [17] FBA_CLK1 / [17] -FBA_CLK1 — [17] FBA_CKE_U

[17] -FBA_CS0_U — -FBA_RAS — -FBA_CAS — FBA_AL10_WEU — [17] FBA_BA2U — FBA_AL3_BA1U — FBA_BA0

FBA_AL11_AU9 — FBA_A8 — FBA_AL6_AU7 — FBA_AL7_AU6 — FBA_AL4_AU5 — FBA_AL5_AU4 — FBA_BA1L_AU3 — FBA_AL1_AU2 — FBA_AL2_AU1 — FBA_AL12_AU0

SWG_SDV2_EC036

FBA_ODT_U [17] — -FBA_RST

NZM3_SWG_SDV2_EC010

R458 243_1% 1005_1/16 w

(BOTTOM/RIGHT SIDE M3)

VCC1R5VIDEO

VREF1_0

U54 — H5TQ1G63BFR-12C

SWAPPING AT 20100601

[17] FBA_DQS5 / [17] -FBA_DQS5 — [17] FBA_DM5 — [17] FBA_DQS7 / [17] -FBA_DQS7 — [17] FBA_DM7 — FBA_CLK1 / -FBA_CLK1 — FBA_CKE_U

-FBA_CS0_U — -FBA_RAS — -FBA_CAS — FBA_AL10_WEU — FBA_BA2U — FBA_AL3_BA1U — FBA_BA0

FBA_AL13 — FBA_AL0_AU12 — FBA_AL9_AU11 — FBA_WEL_AU10 — FBA_A8 — FBA_AL6_AU7 — FBA_AL7_AU6 — FBA_AL4_AU5 — FBA_AL5_AU4 — FBA_BA1L_AU3 — FBA_AL1_AU2 — FBA_AL2_AU1 — FBA_AL12_AU0

FBA_ODT_U — -FBA_RST

NZM3_SWG_SDV2_EC010

R191 243_1% 1005_1/16 w

VCC1R5VIDEO decoupling

C691 0.1UF_10V 1005_X7R_K — C1278 0.1UF_10V 1005_X7R_K — C825 0.1UF_10V 1005_X7R_K — C826 0.1UF_10V 1005_X7R_K — C1002 0.1UF_10V 1005_X7R_K — C872 1UF_10V 1005_X5R_K — C884 1UF_10V 1005_X5R_K

C993 0.1UF_10V 1005_X7R_K — C995 0.1UF_10V 1005_X7R_K — C997 0.1UF_10V 1005_X7R_K — C1000 0.1UF_10V 1005_X7R_K — C624 0.1UF_10V 1005_X7R_K — C1001 1UF_10V 1005_X5R_K — C870 1UF_10V 1005_X5R_K

C1045 0.1UF_10V 1005_X7R_K — C1046 0.1UF_10V 1005_X7R_K — C1010 0.1UF_10V 1005_X7R_K — C676 0.1UF_10V 1005_X7R_K — C677 0.1UF_10V 1005_X7R_K — C734 1UF_10V 1005_X5R_K — C1281 1UF_10V 1005_X5R_K

C1047 0.1UF_10V 1005_X7R_K — C1058 0.1UF_10V 1005_X7R_K — C1051 0.1UF_10V 1005_X7R_K — C1056 0.1UF_10V 1005_X7R_K — C1057 0.1UF_10V 1005_X7R_K — C1050 1UF_10V 1005_X5R_K — C1059 1UF_10V 1005_X5R_K

NZM3_SWG_SDV2_EC010

C1327 1UF_10V 1005_X5R_K — C1326 1UF_10V 1005_X5R_K

NZM3_SWG_SDV2_EC059

C1329 1UF_10V 1005_X5R_K — C1328 1UF_10V 1005_X5R_K

NZM3_SWG_SDV2_EC059

C1331 1UF_10V 1005_X5R_K — C1330 1UF_10V 1005_X5R_K

NZM3_SWG_SDV2_EC059

C1333 1UF_10V 1005_X5R_K — C1332 1UF_10V 1005_X5R_K

NZM3_SWG_SDV2_EC059

FLEX Computing

Project Name : NOZOMI-3 SWG SDV2	Title : VRAM CHANNEL-A
Size : C	Document Number :
Date: Monday, June 14, 2010	Sheet : 21 of 99
	Rev : 2.10

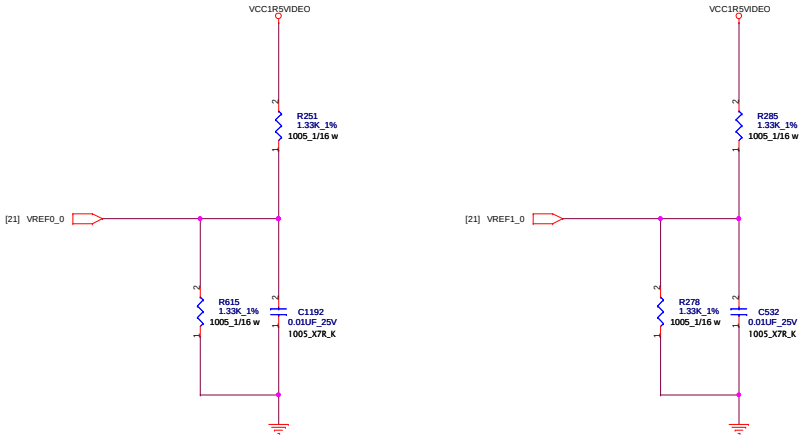

FLEX Computing

Project Name : NOZOMI-3 SWG SDV2	Title : DYNAMIC MEMORY TERMINATION	
Size : C	Document Number :	Rev : 2.10
Date: Monday, June 14, 2010	Sheet : 22 of 99	

TABLE

AMT	YES	NO	NO
RPAT	YES	YES	NO
U5	QM67	HM67	HM65

LOGIC

P/N 41U6143
KDS DST310S-32.768KHz-20PPM-9PF
RIVER TFX-02-32.768KJ80862

TABLE

SPKR TCO TIMER SYSTEM REBOOT	
HIGH	DISABLED (NO REBOOT)
LOW	ENABLED

TABLE

ESATA	YES	NO
C732	ASM	NO_ASM
C743	ASM	NO_ASM
C744	ASM	NO_ASM
C747	ASM	NO_ASM

LOGIC

TEST PAD
BOTTOM SIDE
DO NOT MOVE AFTER FIX

PLACE ON TOP SIDE

COUGAR_POINT_M_R1P0

FLEXComputing

Project Name : NOZOMI-3 SWG SDV2	Title : PCH(1/9):HDA/JTAG/SPI/SATA
Size : C	Document Number :
Date: Monday, June 14, 2010	Sheet : 23 of 99

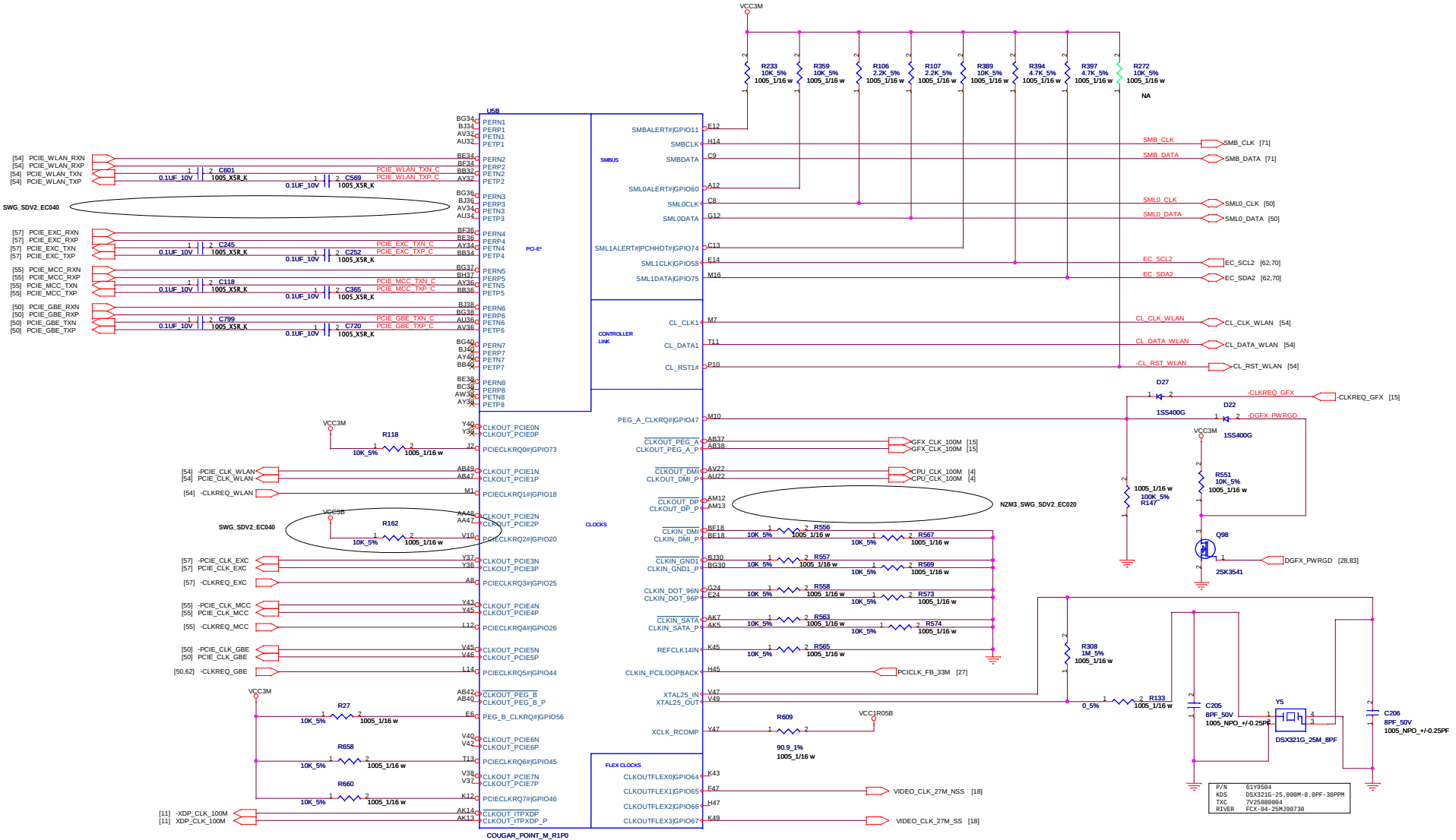

FLEXComputing

Project Name : NOZOMI-3 SWG SDV2	Title : PCH(2/9):PCI-E/SMBUS/CLK
Size : C	Document Number :
Rev : 2.10	
Date: Monday, June 14, 2010	Sheet : 24 of 99

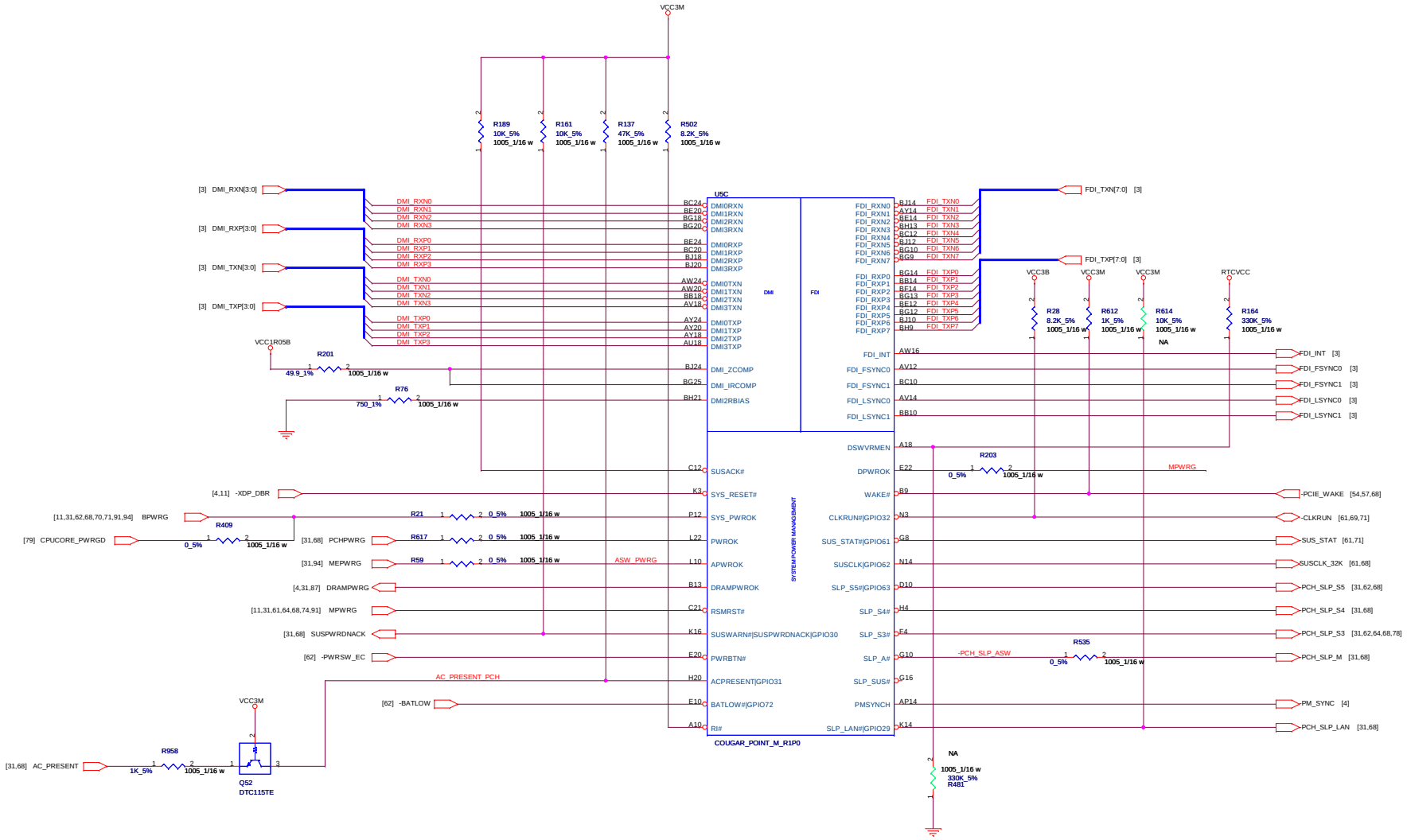

FLEXComputing

Project Name : NOZOMI-3 SWG SDV2	Title : PCH(3/9):DMI/FDI/PM
Size : C	Document Number :
Date: Monday, June 14, 2010	Sheet : 25 of 99
	Rev : 2.10

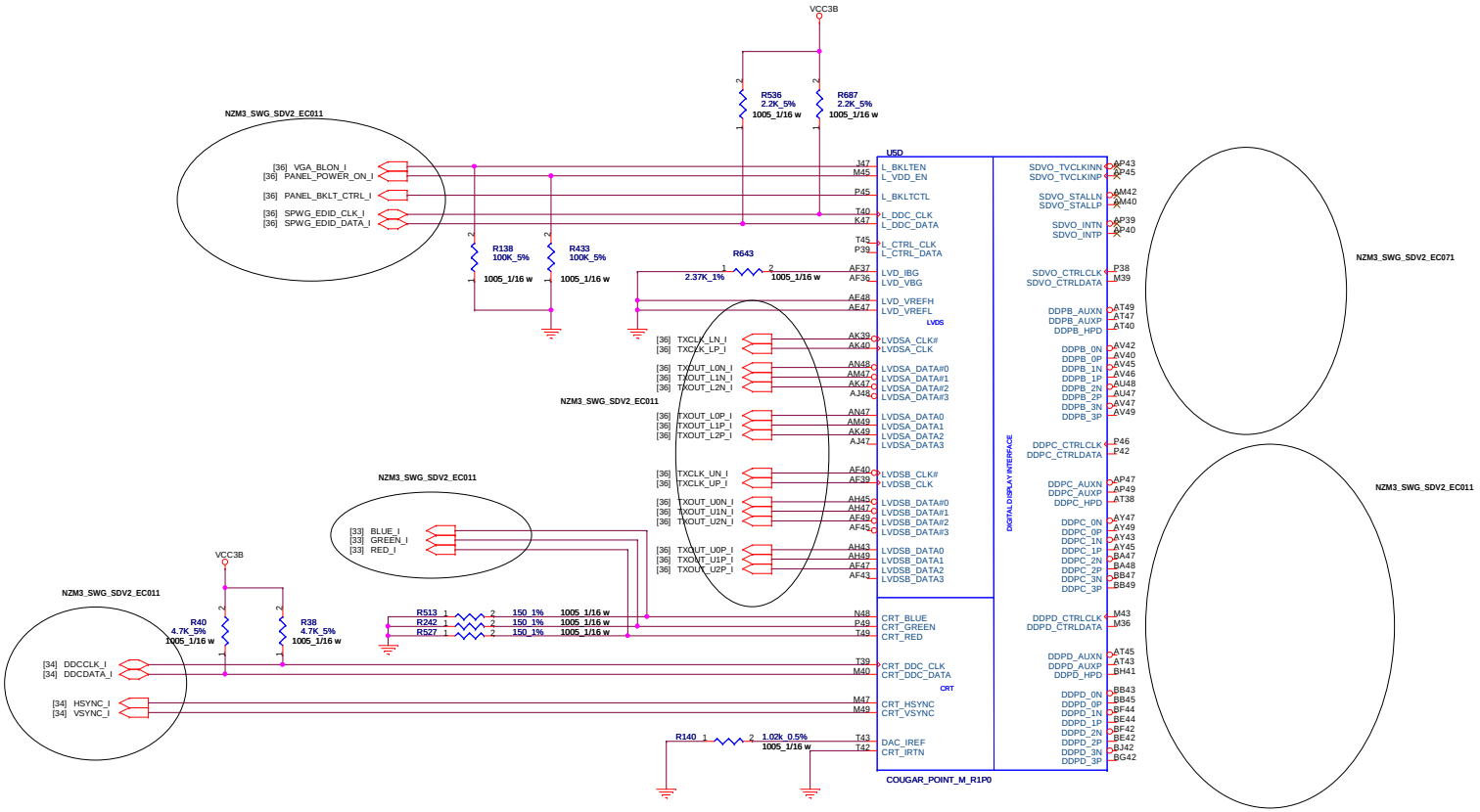

FLEXComputing

Project Name : NOZOMI-3 SWG SDV2	Title : PCH(4/9):LVDS/CRT/DDI
Size : C	Document Number :
Date: Monday, June 14, 2010	Sheet : 26 of 99
	Rev : 2.10

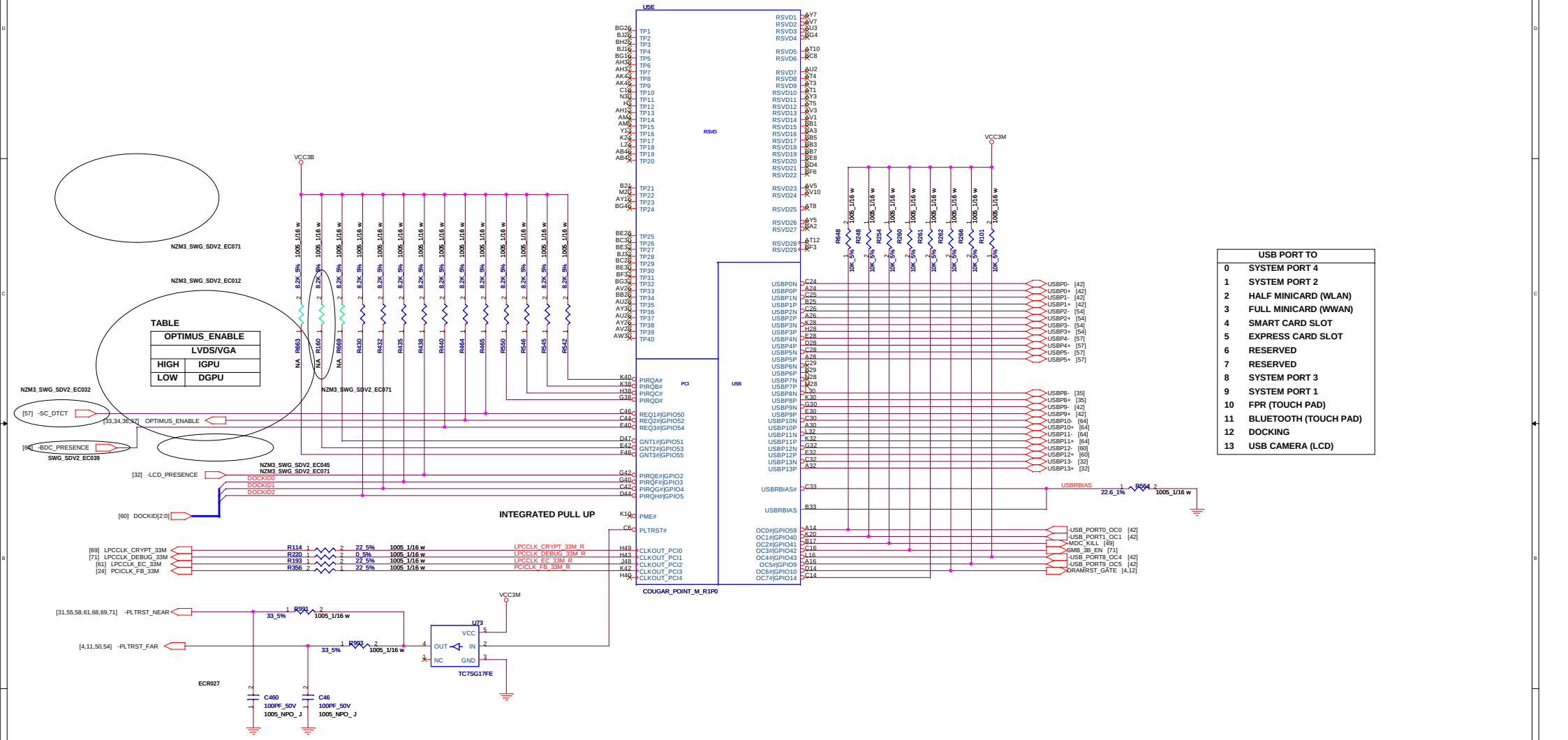

USB PORT TO	
0	SYSTEM PORT 4
1	SYSTEM PORT 2
2	HALF MINICARD (WLAN)
3	FULL MINICARD (WWAN)
4	SMART CARD SLOT
5	EXPRESS CARD SLOT
6	RESERVED
7	RESERVED
8	SYSTEM PORT 3
9	SYSTEM PORT 1
10	FPR (TOUCH PAD)
11	BLUETOOTH (TOUCH PAD)
12	DOCKING
13	USB CAMERA (LCD)

FLEXComputing

Project Name : NOZOMI-3 SWG SDV2	Title : PCH(5/9):PCI/USB/NVRAM	
Size : C	Document Number :	Rev : 2.10
Date: Monday, June 14, 2010	Sheet : 27 of 99	

TABLE

GPIO15	ME CRYPTO STRAP
HIGH	WITH CONFIDENTIALITY
LOW	NO CONFIDENTIALITY

TABLE

GPIO8	INTEGRATED CLOCKING
HIGH	DISABLED(BTM)
LOW	ENABLED(FCIM)

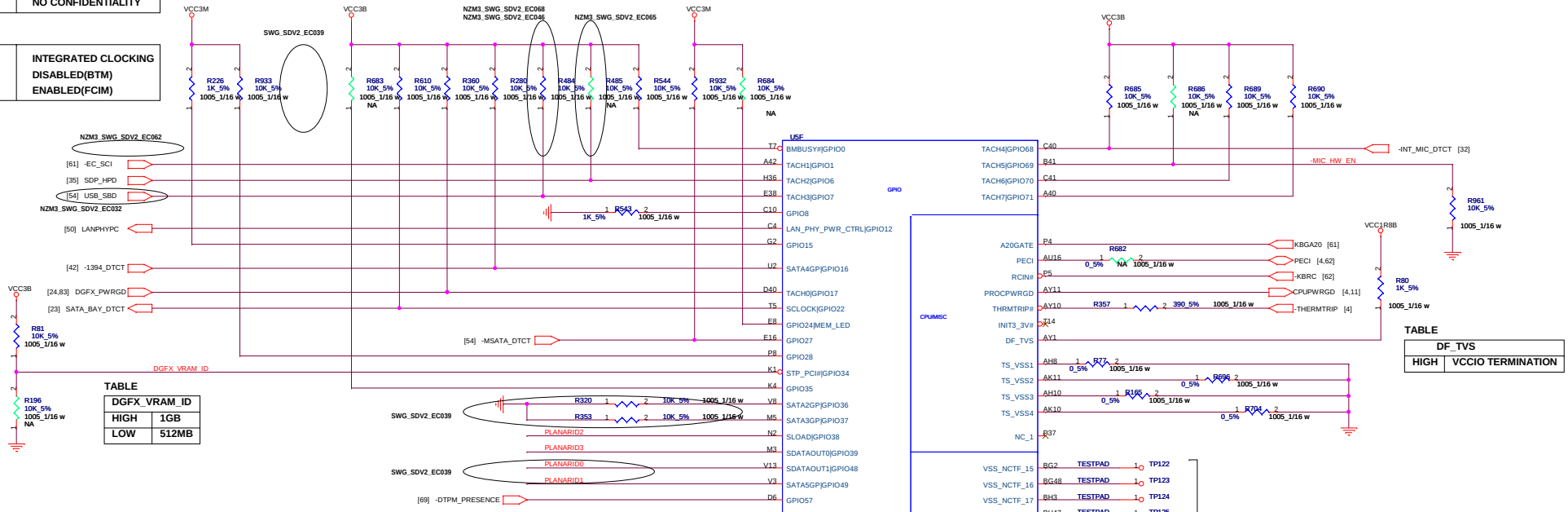

TABLE

DGFX_VRAM_ID	
HIGH	1GB
LOW	512MB

TABLE

DF_TVS	
HIGH	VCCIO TERMINATION

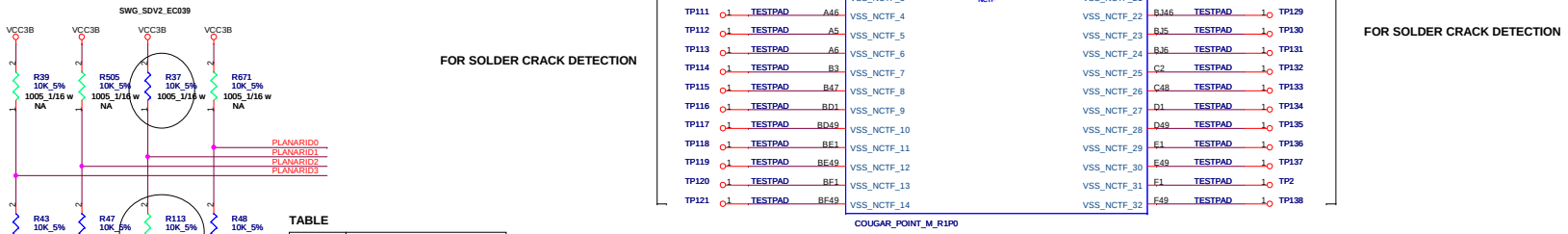

FOR SOLDER CRACK DETECTION

FOR SOLDER CRACK DETECTION

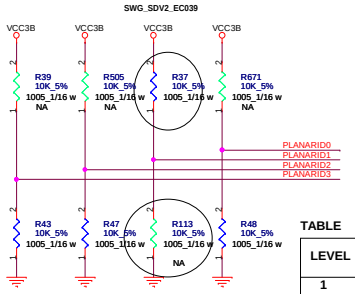

TABLE

LEVEL	PLANAR ID			
	3	2	1	0
1	R39	R505	R37	R671
0	R43	R47	R113	R48

TABLE

LEVEL	PLANARID[3..0]
PDV	0000B
SDV	0000B/0001B
SDV2	0010B

SWG_SDV2_EC039

Project Name : NOZOMI-3 SWG SDV2	Title : PCH(6/9):GPIO/NCTF/RSVD
Size : C	Document Number :
Date: Monday, June 14, 2010	Sheet : 28 of 99

FLEXComputing

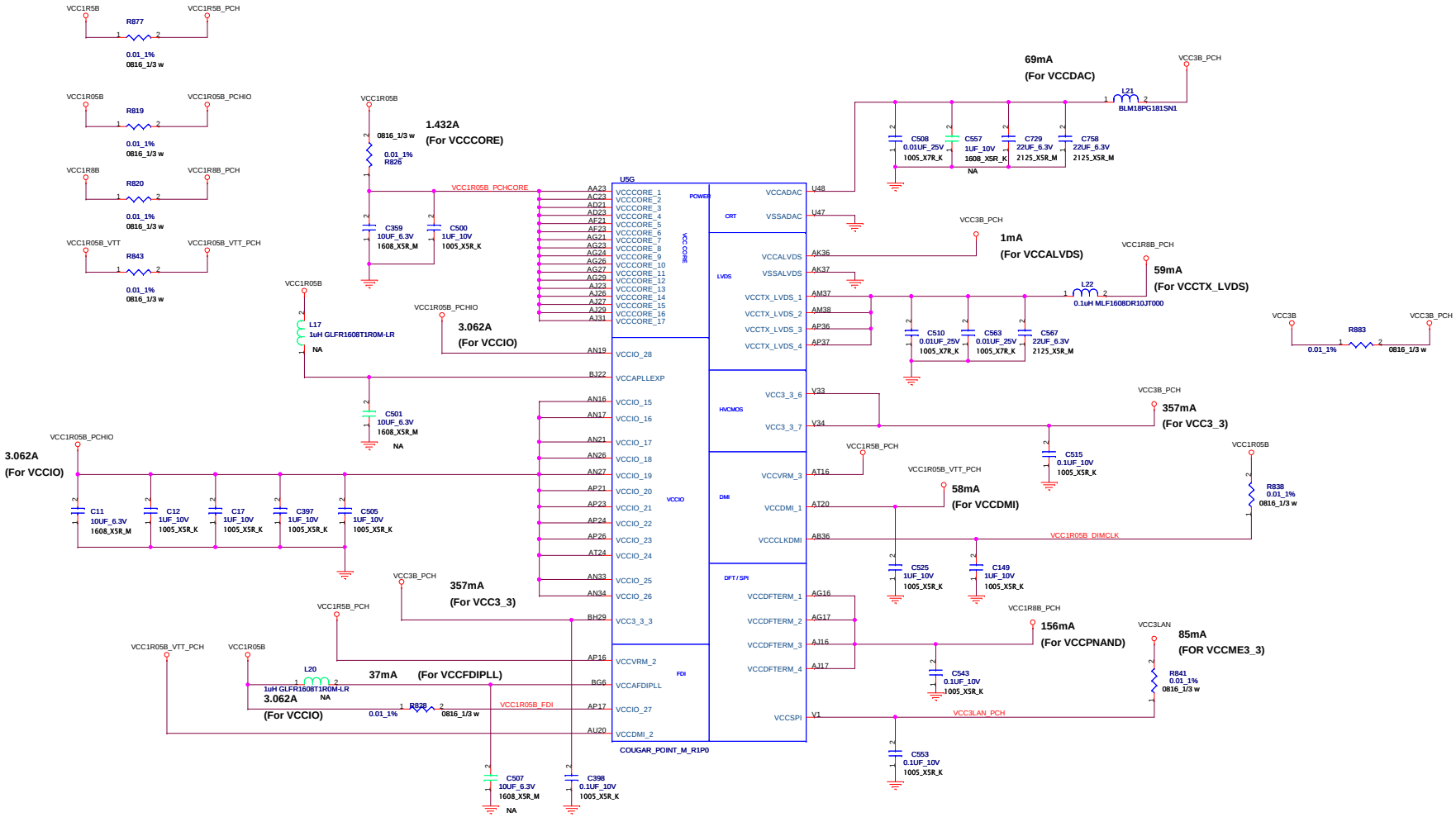

FLEXComputing

Project Name : NOZOMI-3 SWG SDV2	Title : PCH(7/9):POWER
Size : C	Document Number :
Date: Monday, June 14, 2010	Sheet : 29 of 99
	Rev : 2.10

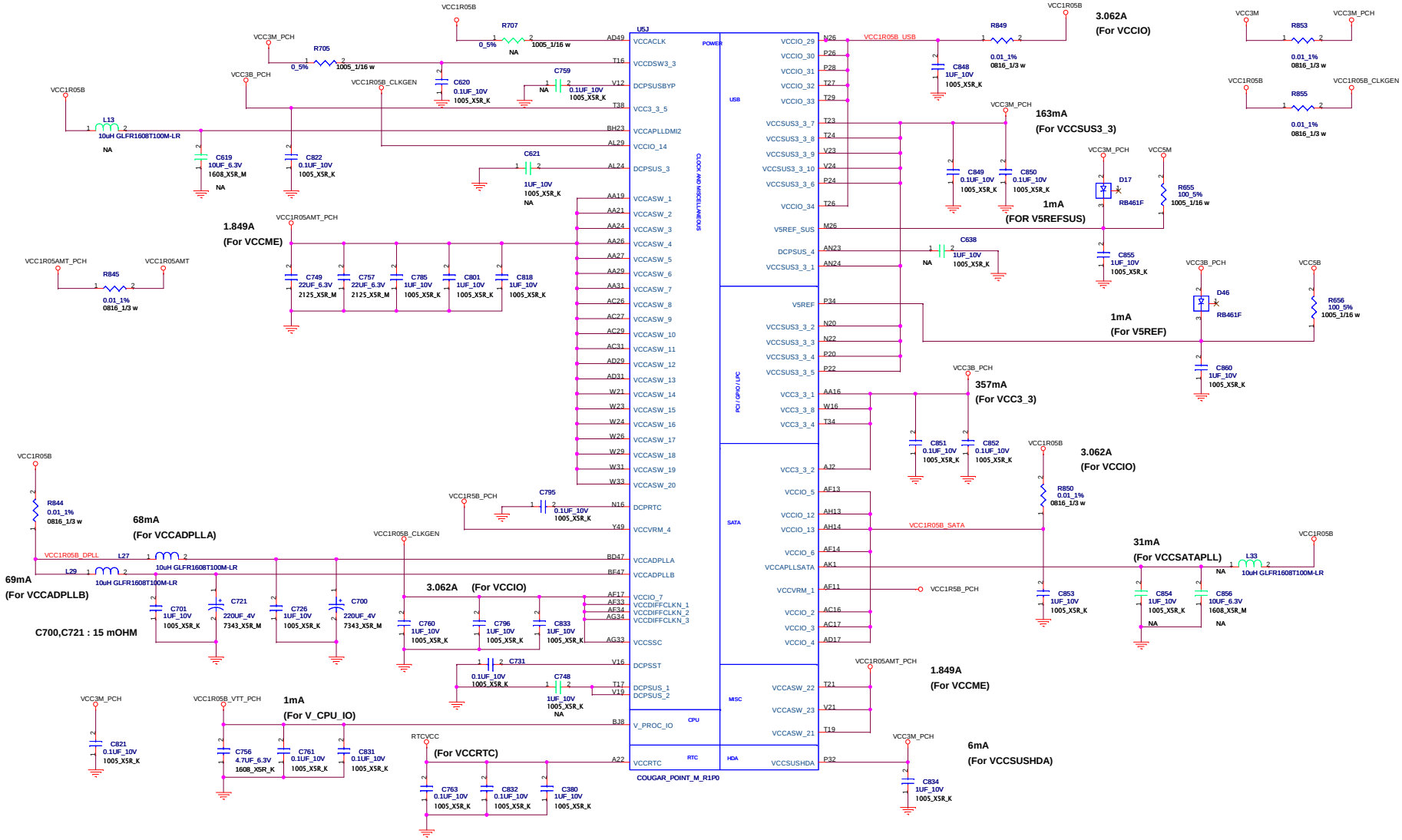
U5J
COUGAR_POINT_M_R1P0
POWER
USB
CLOCK AND MISCELLANEOUS
DMI / DMI2 / FDI
SATA
MISC
CPU
RTC
HDA
VCC1R05B
VCC3M_PCH
VCC3B_PCH
VCC1R05B_CLKGEN
VCC1R05AMT_PCH
VCC1R05AMT
VCC1R05B_VTT_PCH
VCC1R05B_USB
VCC1R05B_SATA
VCC1R05B_DPLL
VCC1R5B_PCH
VCC3M
VCC5M
VCC5B
R707 0_5% NA 1005_1/16 w
R705 0_5% 1005_1/16 w
R849 0.01_1% 0816_1/3 w
R853 0.01_1% 0816_1/3 w
R855 0.01_1% 0816_1/3 w
R845 0.01_1% 0816_1/3 w
R844 0.01_1% 0816_1/3 w
R850 0.01_1% 0816_1/3 w
R655 100_5% 1005_1/16 w
R656 100_5% 1005_1/16 w
L13 10uH GLFR1608T100M-LR NA
L27 10uH GLFR1608T100M-LR
L29 10uH GLFR1608T100M-LR
L33 10uH GLFR1608T100M-LR NA
D17 RB461F
D46 RB461F
C619 10UF_6.3V 1608_X5R_M NA
C620 0.1UF_10V 1005_X5R_K
C621 1UF_10V 1005_X5R_K NA
C759 NA 0.1UF_10V 1005_X5R_K
C822 0.1UF_10V 1005_X5R_K
C638 NA 1UF_10V 1005_X5R_K
C848 1UF_10V 1005_X5R_K
C849 0.1UF_10V 1005_X5R_K
C850 0.1UF_10V 1005_X5R_K
C855 1UF_10V 1005_X5R_K
C860 1UF_10V 1005_X5R_K
C749 22UF_6.3V 2125_X5R_M
C757 22UF_6.3V 2125_X5R_M
C785 1UF_10V 1005_X5R_K
C801 1UF_10V 1005_X5R_K
C818 1UF_10V 1005_X5R_K
C851 0.1UF_10V 1005_X5R_K
C852 0.1UF_10V 1005_X5R_K
C853 1UF_10V 1005_X5R_K
C854 1UF_10V 1005_X5R_K
C856 10UF_6.3V 1608_X5R_M NA
C795 0.1UF_10V 1005_X5R_K
C701 1UF_10V 1005_X5R_K
C721 220UF_4V 7343_X5R_M
C726 1UF_10V 1005_X5R_K
C700 220UF_4V 7343_X5R_M
C760 1UF_10V 1005_X5R_K
C796 1UF_10V 1005_X5R_K
C833 1UF_10V 1005_X5R_K
C731 0.1UF_10V 1005_X5R_K
C748 1UF_10V 1005_X5R_K NA
C821 0.1UF_10V 1005_X5R_K
C756 4.7UF_6.3V 1608_X5R_K
C761 0.1UF_10V 1005_X5R_K
C831 0.1UF_10V 1005_X5R_K
C763 0.1UF_10V 1005_X5R_K
C832 0.1UF_10V 1005_X5R_K
C380 1UF_10V 1005_X5R_K
C834 1UF_10V 1005_X5R_K
3.062A (For VCCIO)
163mA (For VCCSUS3_3)
1mA (FOR V5REFSUS)
1mA (For V5REF)
357mA (For VCC3_3)
3.062A (For VCCIO)
1.849A (For VCCME)
68mA (For VCCADPLLA)
69mA (For VCCADPLLB)
C700,C721 : 15 mOHM
3.062A (For VCCIO)
31mA (For VCCSATAPLL)
1.849A (For VCCME)
1mA (For V_CPU_IO)
(For VCCRTC)
6mA (For VCCSUSHDA)
VCCACLK VCCDSW3_3 DCPSUSBYP VCC3_3_5 VCCAPLLDMI2 VCCIO_14 DCPSUS_3 VCCASW_1 VCCASW_2 VCCASW_3 VCCASW_4 VCCASW_5 VCCASW_6 VCCASW_7 VCCASW_8 VCCASW_9 VCCASW_10 VCCASW_11 VCCASW_12 VCCASW_13 VCCASW_14 VCCASW_15 VCCASW_16 VCCASW_17 VCCASW_18 VCCASW_19 VCCASW_20 DCPRTC VCCVRM_4 VCCADPLLA VCCADPLLB VCCIO_7 VCCDIFFCLKN_1 VCCDIFFCLKN_2 VCCDIFFCLKN_3 VCCSSC DCPSST DCPSUS_1 DCPSUS_2 V_PROC_IO VCCRTC
VCCIO_29 VCCIO_30 VCCIO_31 VCCIO_32 VCCIO_33 VCCSUS3_3_7 VCCSUS3_3_8 VCCSUS3_3_9 VCCSUS3_3_10 VCCSUS3_3_6 VCCIO_34 V5REF_SUS DCPSUS_4 VCCSUS3_3_1 V5REF VCCSUS3_3_2 VCCSUS3_3_3 VCCSUS3_3_4 VCCSUS3_3_5 VCC3_3_1 VCC3_3_8 VCC3_3_4 VCC3_3_2 VCCIO_5 VCCIO_12 VCCIO_13 VCCIO_6 VCCAPLLSATA VCCVRM_1 VCCIO_2 VCCIO_3 VCCIO_4 VCCASW_22 VCCASW_23 VCCASW_21 VCCSUSHDA
FLEX Computing
NZM3_SWG_SDV2_EC077
Project Name : NOZOMI-3 SWG SDV2
Title : PCH(8/9):POWER
Size : C
Document Number :
Rev : 2.10
Date: Monday, June 14, 2010
Sheet : 30 of 99

TEST PAD FOR METS/APS

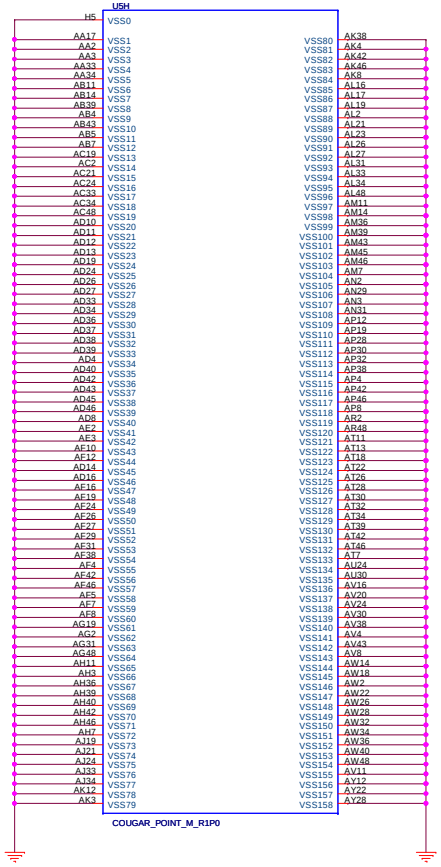

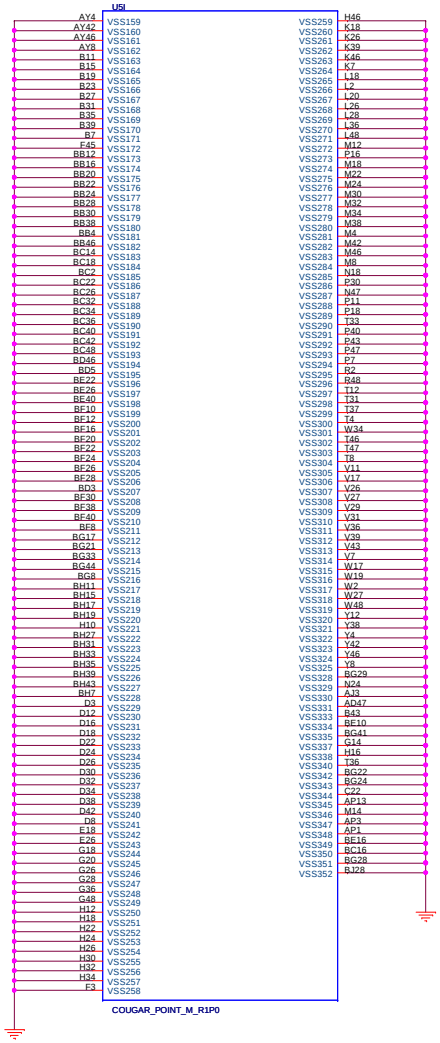

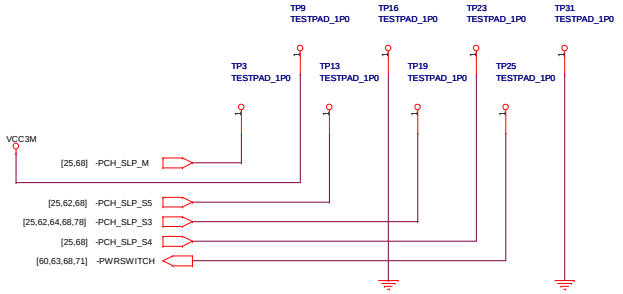

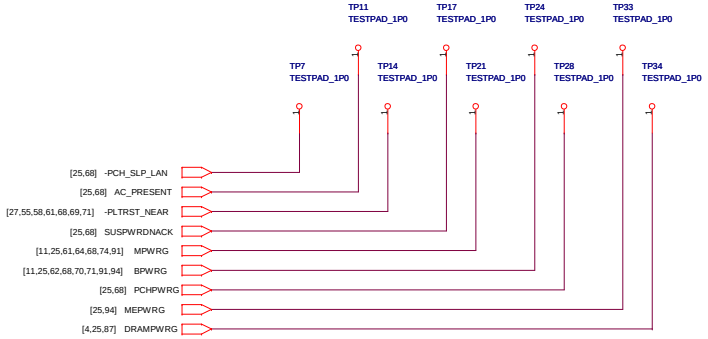

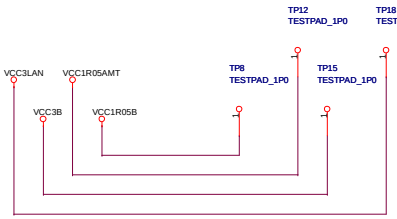

FLEXComputing			
Project Name : NOZOMI-3 SWG SDV2	Title : PCH(9/9):GND		
Size : C	Document Number :		Rev : 2.10
Date: Monday, June 14, 2010		Sheet : 31 of 99	

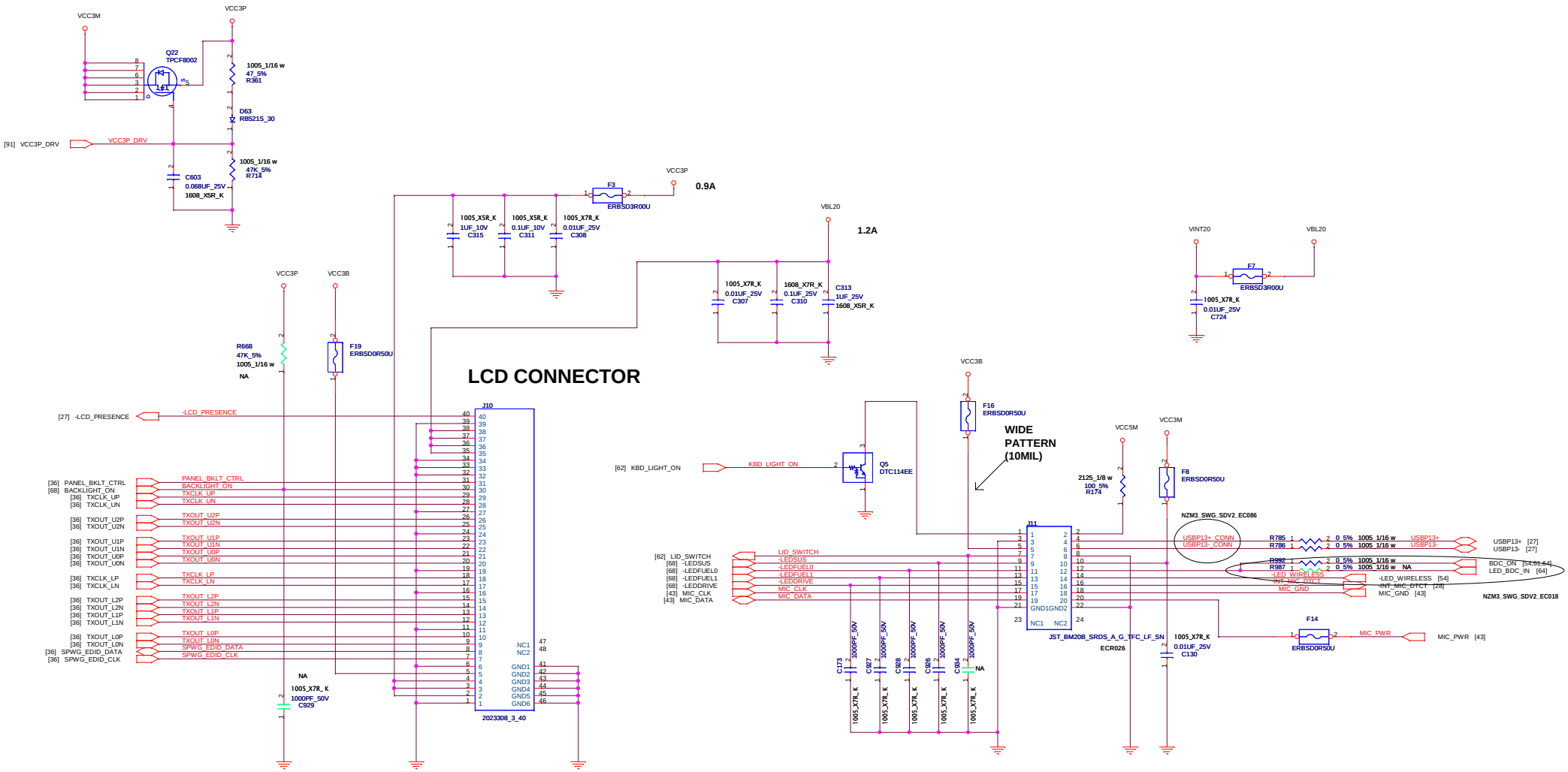

FLEX Computing

Project Name : NOZOMI-3 SWG SDV2	Title : LCD CONNECTOR
Size : C	Document Number :
Date: Monday, June 14, 2010	Sheet : 32 of 99

Rev : 2.10

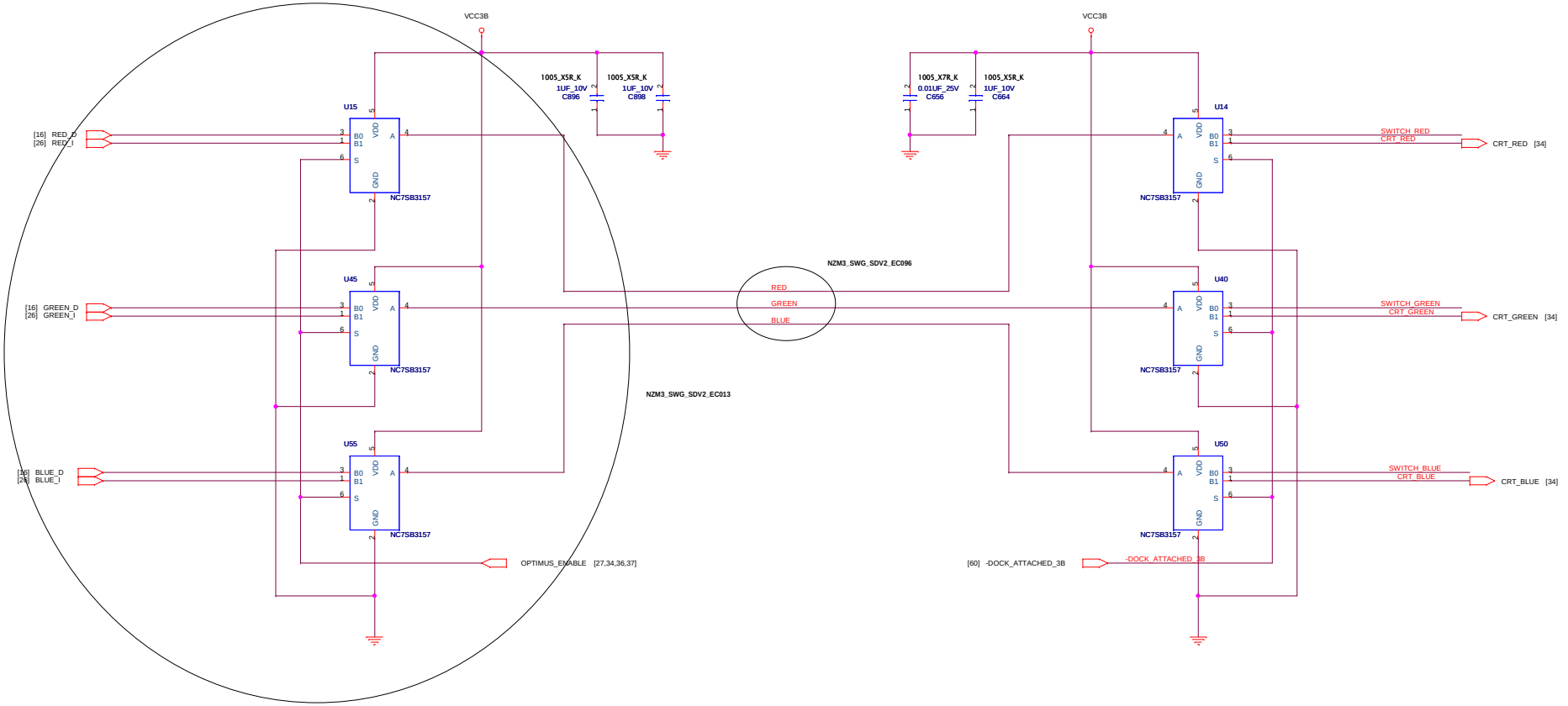

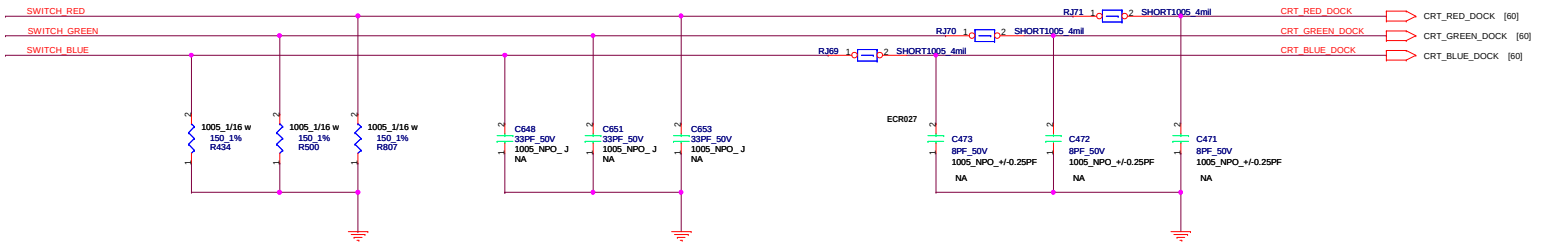

FLEXComputing

Project Name : NOZOMI-3 SWG SDV2	Title : RGB SWITCH	
Size : C	Document Number :	Rev : 2.10
Date: Monday, June 14, 2010		Sheet : 33 of 99

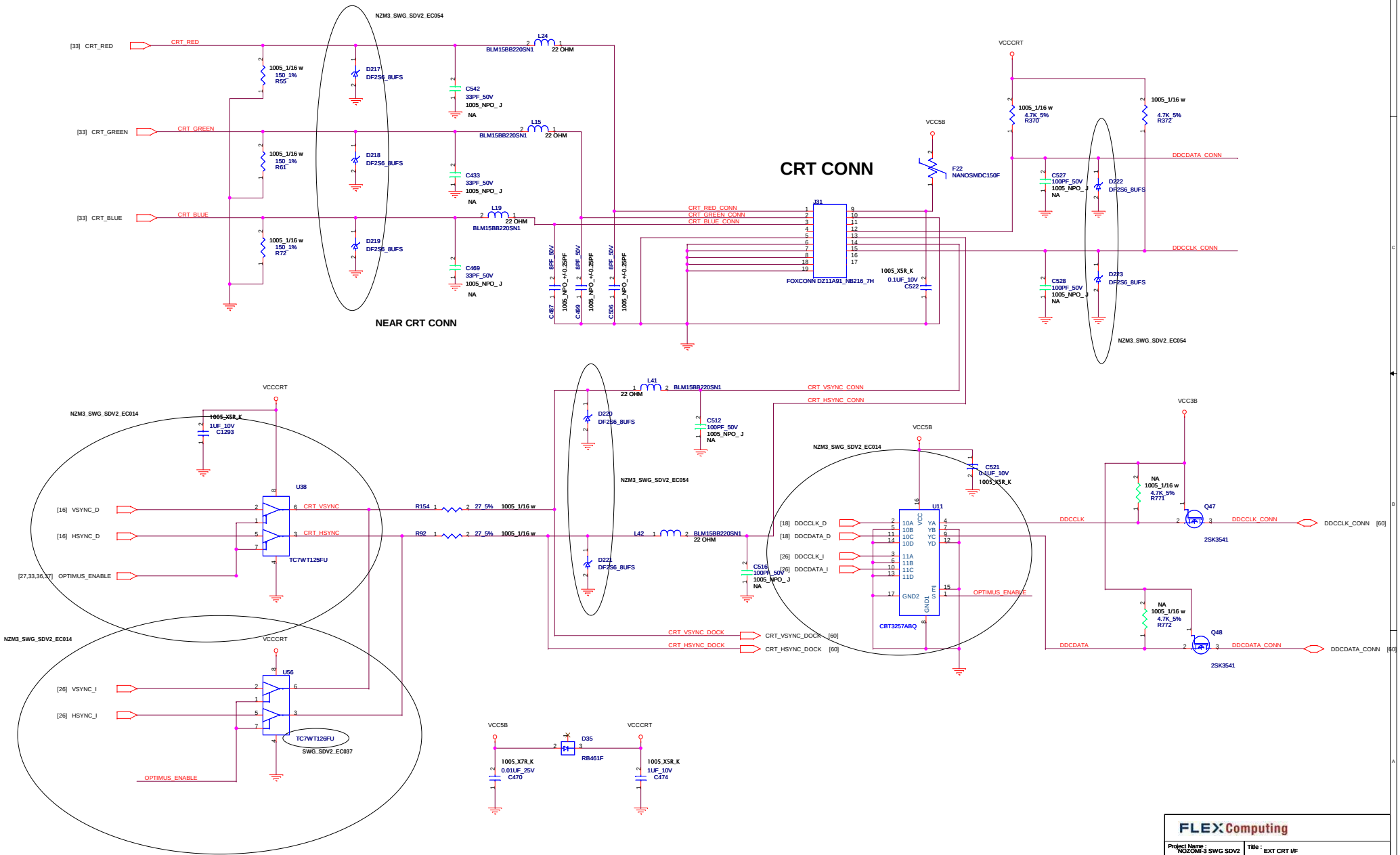
CRT CONN
NEAR CRT CONN
NZM3_SWG_SDV2_EC054
NZM3_SWG_SDV2_EC014
[33] CRT_RED
[33] CRT_GREEN
[33] CRT_BLUE
CRT_RED
CRT_GREEN
CRT_BLUE
CRT_RED_CONN
CRT_GREEN_CONN
CRT_BLUE_CONN
CRT_VSYNC_CONN
CRT_HSYNC_CONN
VCCCRT
VCC5B
VCC3B
J31
FOXCONN DZ11A91_NB216_7H
F22
NANOSMDC150F
DDCDATA_CONN
DDCCLK_CONN
U38
TC7WT125FU
U56
TC7WT126FU
SWG_SDV2_EC037
U11
CBT3257ABQ
Q47
Q48
2SK3541
[16] VSYNC_D
[16] HSYNC_D
[27,33,36,37] OPTIMUS_ENABLE
[26] VSYNC_I
[26] HSYNC_I
OPTIMUS_ENABLE
[18] DDCCLK_D
[18] DDCDATA_D
[26] DDCCLK_I
[26] DDCDATA_I
DDCCLK
DDCDATA
CRT_VSYNC_DOCK
CRT_HSYNC_DOCK
CRT_VSYNC_DOCK [60]
CRT_HSYNC_DOCK [60]
DDCCLK_CONN [60]
DDCDATA_CONN [60]
D35
RB461F
FLEX Computing
Project Name : NOZOMI-3 SWG SDV2
Title : EXT CRT I/F
Size : C
Document Number :
Rev : 2.10
Date: Monday, June 14, 2010
Sheet : 34 of 99

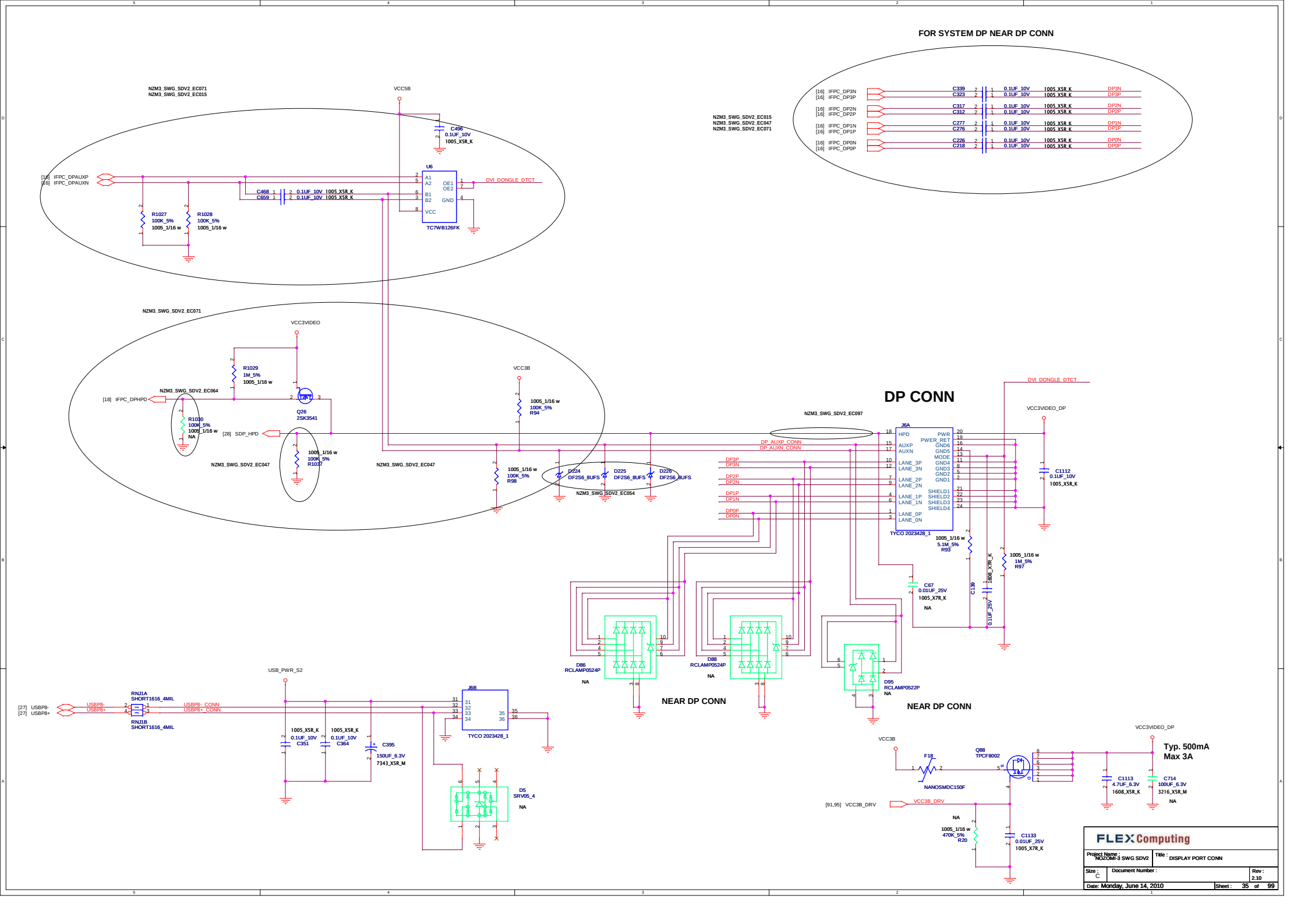
FOR SYSTEM DP NEAR DP CONN
DP CONN
NEAR DP CONN
NEAR DP CONN
DVI_DONGLE_DTCT
VCC5B
VCC3VIDEO
VCC3B
VCC3VIDEO_DP
USB_PWR_S2
U6
TC7WB126FK
J6A
TYCO 2023428_1
J6B
TYCO 2023428_1
Q26
2SK3541
Q88
TPCF8002
F18
NANOSMDC150F
D86
RCLAMP0524P
D88
RCLAMP0524P
D95
RCLAMP0522P
D5
SRV05_4
D224
DF2S6_8UFS
D225
DF2S6_8UFS
D226
DF2S6_8UFS
Typ. 500mA
Max 3A
FLEX Computing
Project Name : NOZOMI-3 SWG SDV2
Title : DISPLAY PORT CONN
Size : C
Document Number :
Rev : 2.10
Date: Monday, June 14, 2010
Sheet : 35 of 99

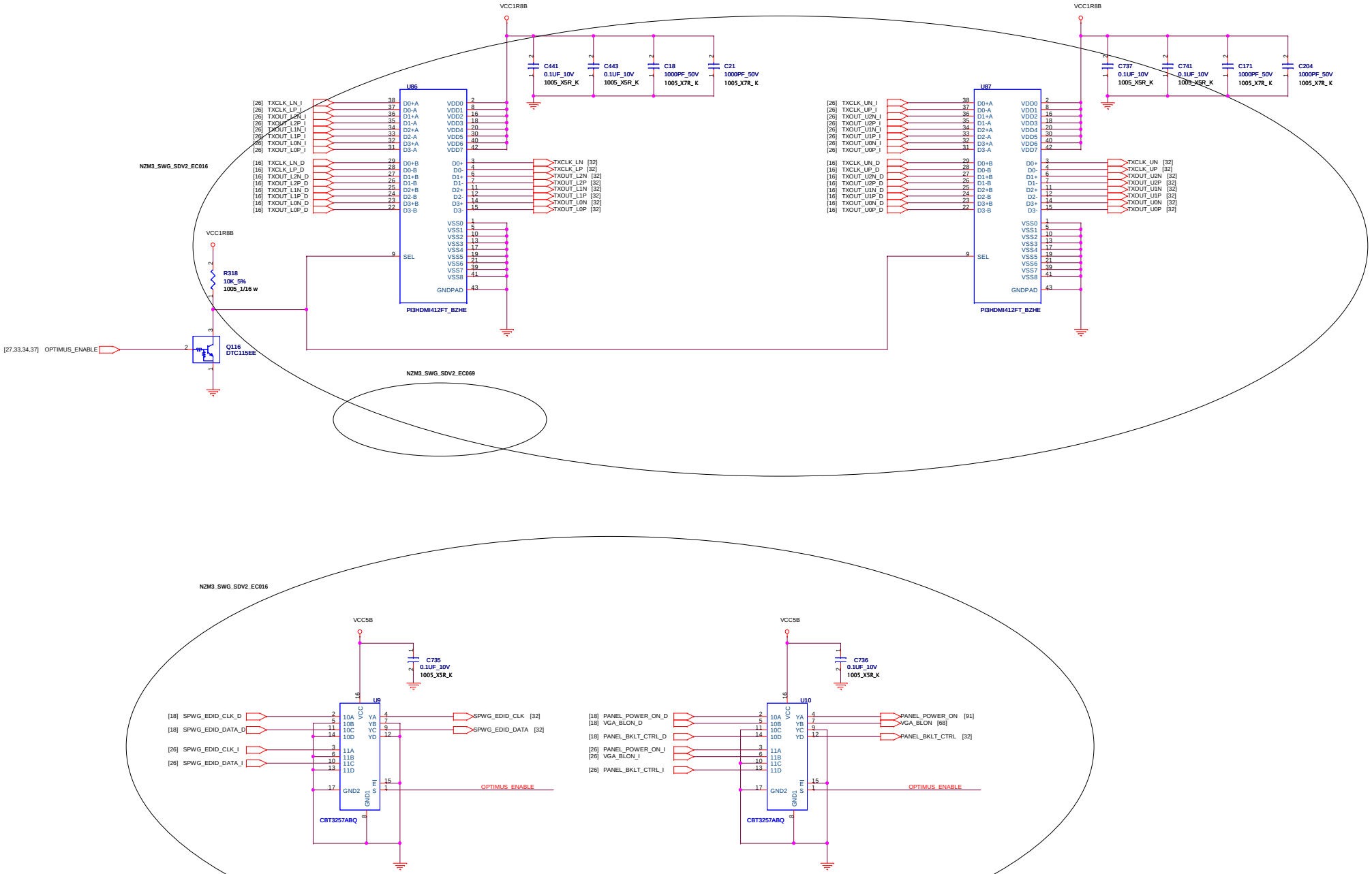

FLEX Computing

Project Name : NOZOMI-3 SWG SDV2	Title : LVDS SWITCH
Size : C	Document Number :
Rev : 2.10	
Date: Monday, June 14, 2010	Sheet : 36 of 99

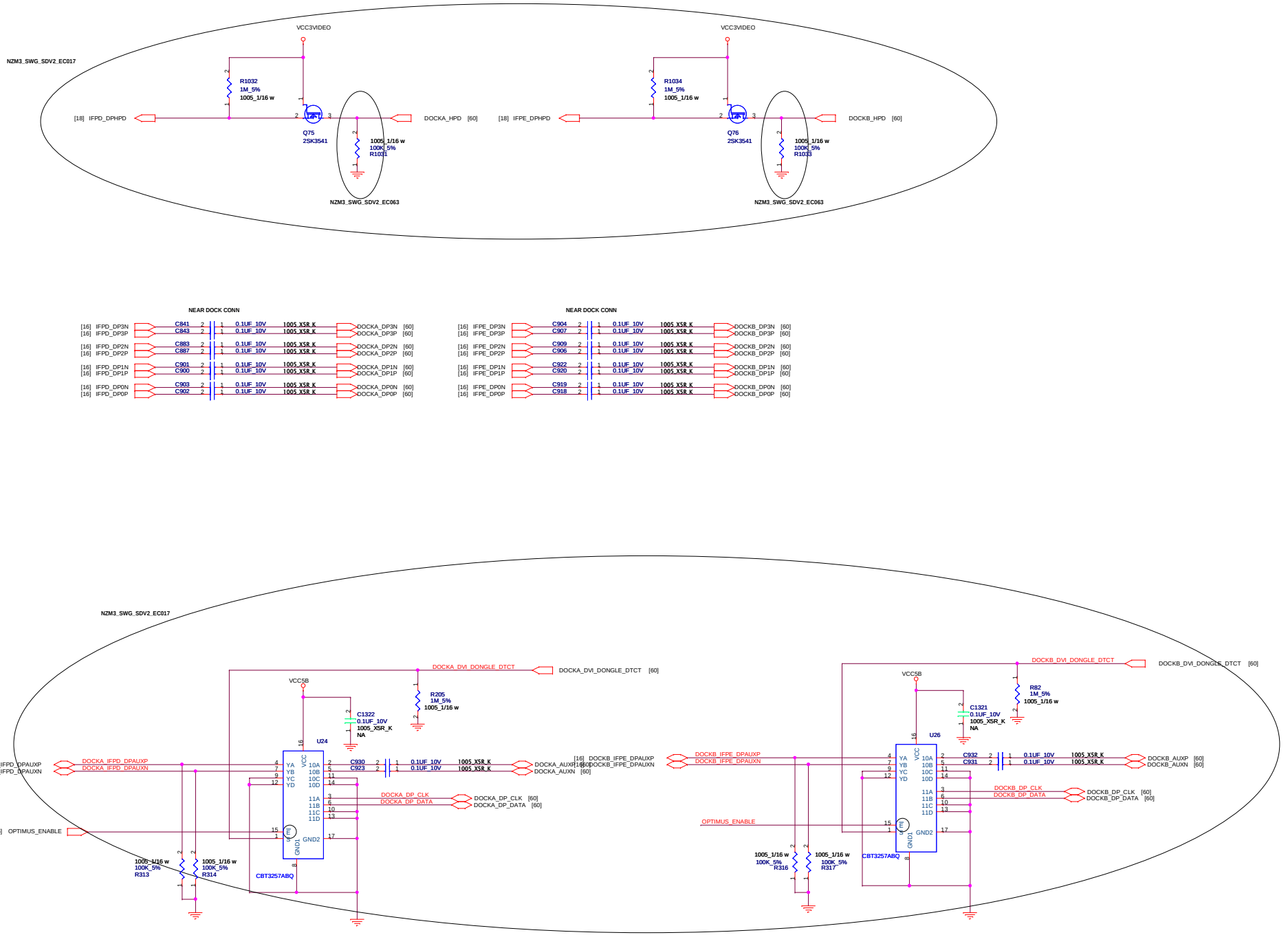

FLEXComputing

Project Name : NOZOMI-3 SWG SDV2	Title : DISPLAY PORT MUX	
Size : C	Document Number :	Rev : 2.10
Date: Monday, June 14, 2010	Sheet : 37 of 99	

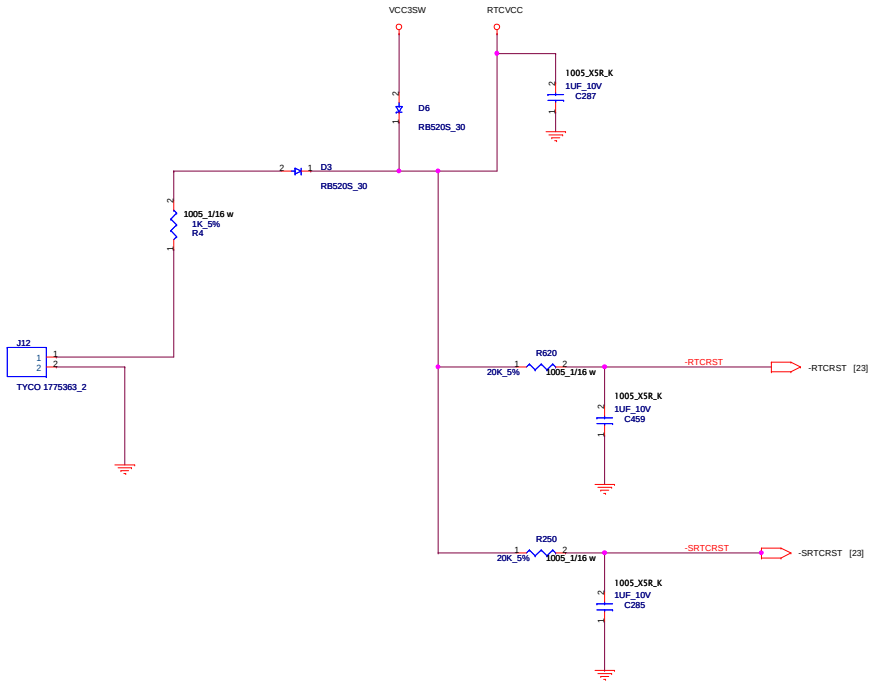

FLEX Computing

Project Name : NOZOMI-3 SWG SDV2	Title : RTC BATTERY
Size : C	Document Number :
Date: Monday, June 14, 2010	Sheet : 38 of 99
	Rev : 2.10

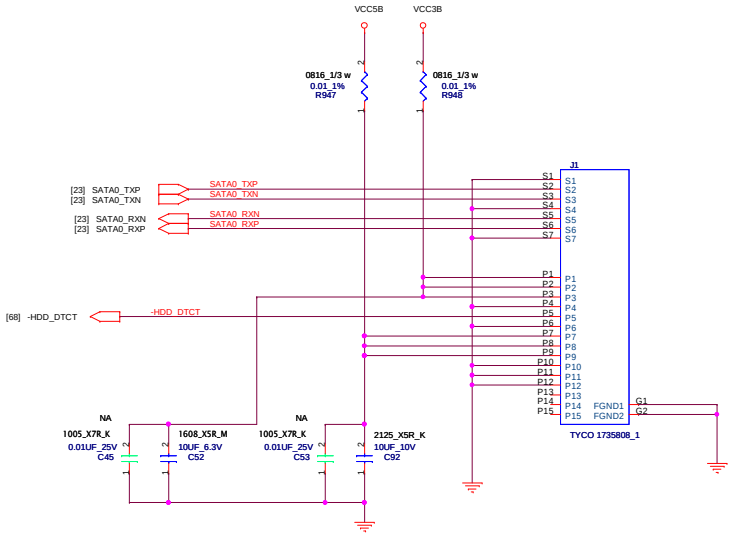

FLEX Computing

Project Name : NOZOMI-3 SWG SDV2	Title : SATA HDD CONN
Size : C	Document Number :
Date: Monday, June 14, 2010	Sheet : 39 of 99
	Rev : 2.10

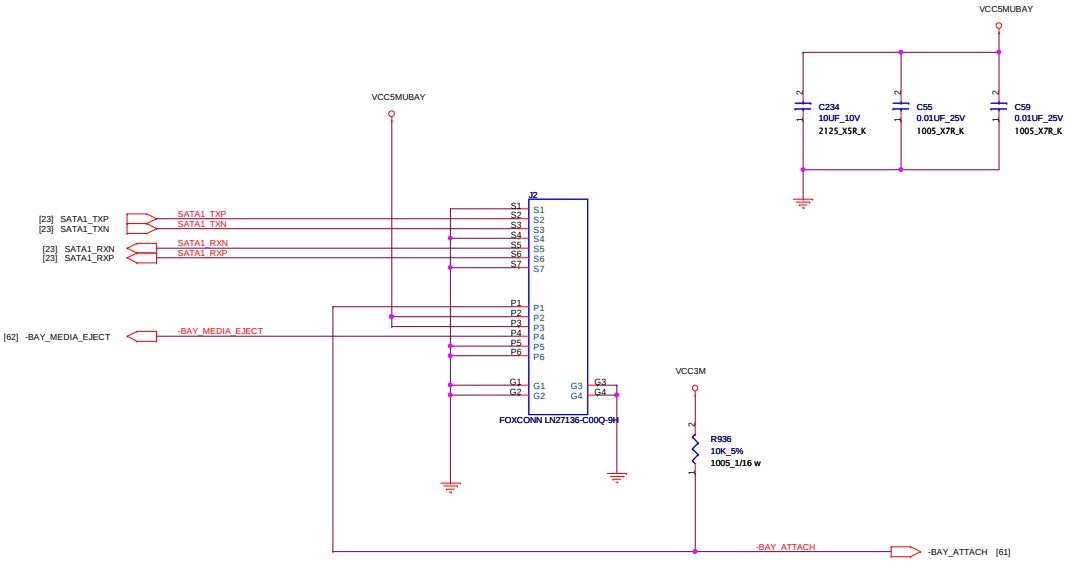

FLEX Computing

Project Name : NOZOMI-3 SWG SDV2	Title : SATA BAY I/F CONN
Size : C	Document Number :
Date: Monday, June 14, 2010	Sheet : 40 of 99
	Rev : 2.10

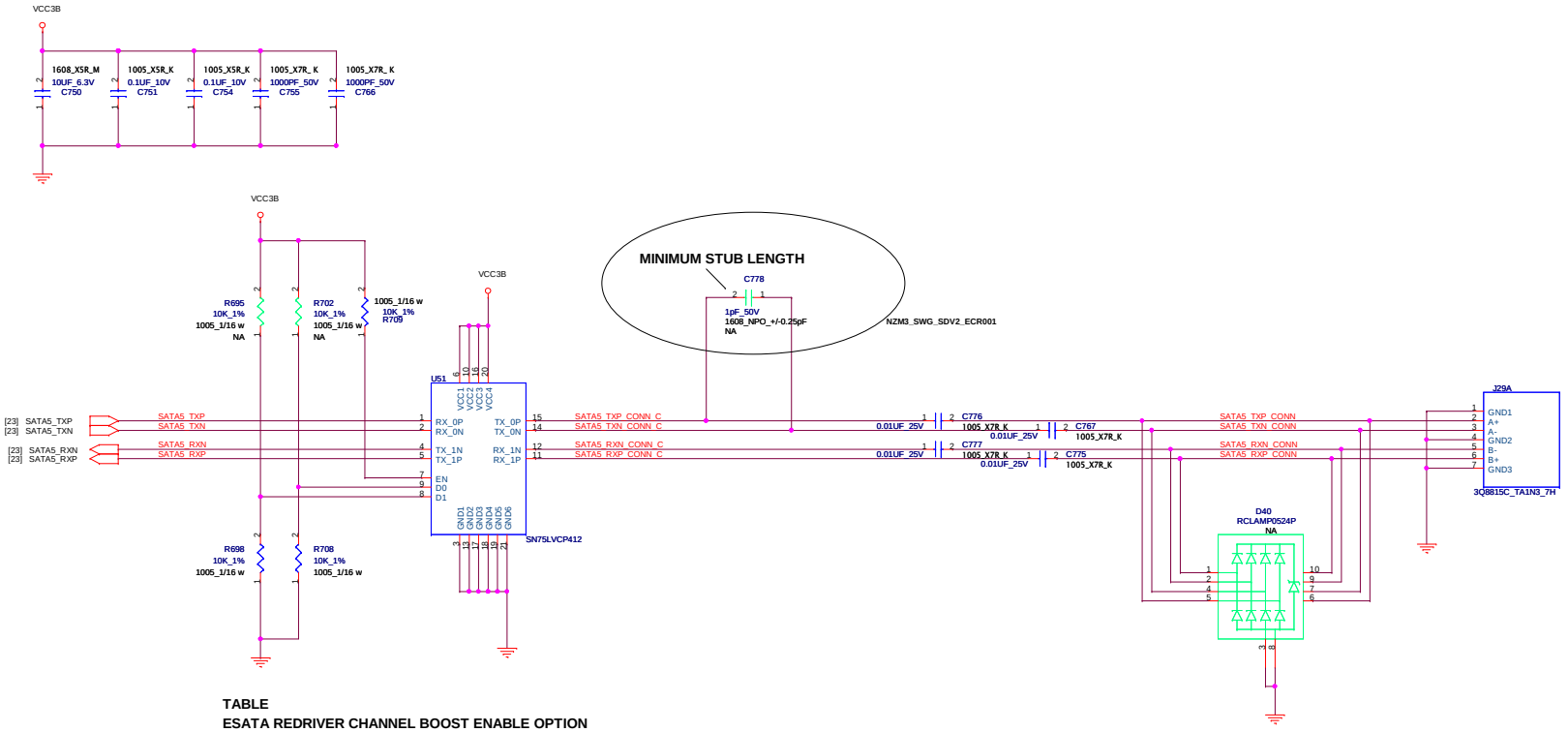

TABLE

ESATA REDRIVER CHANNEL BOOST ENABLE OPTION

EN	D0	D1	CH-0	CH-1
0	X	X	STANDBY	STANDBY
1	0	0	STANDARD	STANDARD
1	1	0	BOOST	STANDARD
1	0	1	STANDARD	BOOST
1	1	1	BOOST	BOOST

← LOGIC

FLEX Computing

Project Name : NOZOMI-3 SWG SDV2	Title : ESATA CONN	
Size : C	Document Number :	Rev : 2.10
Date: Monday, June 14, 2010	Sheet : 41 of 99	

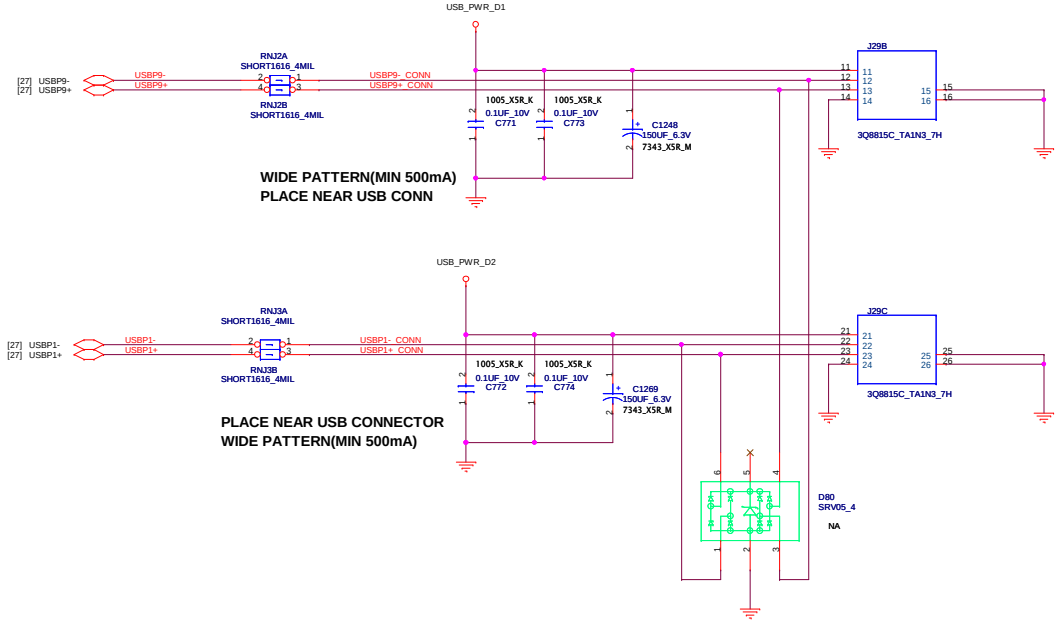

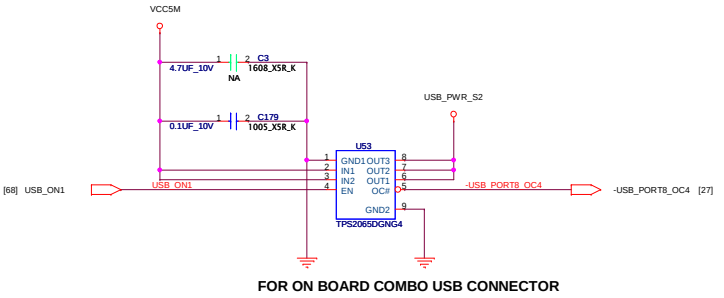

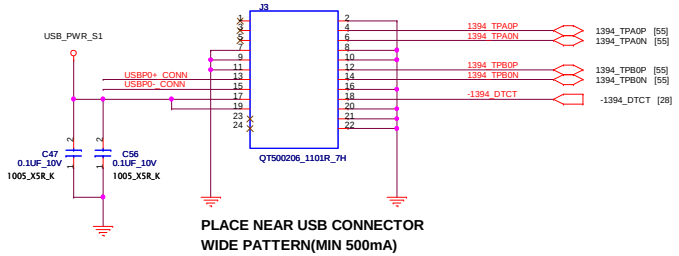

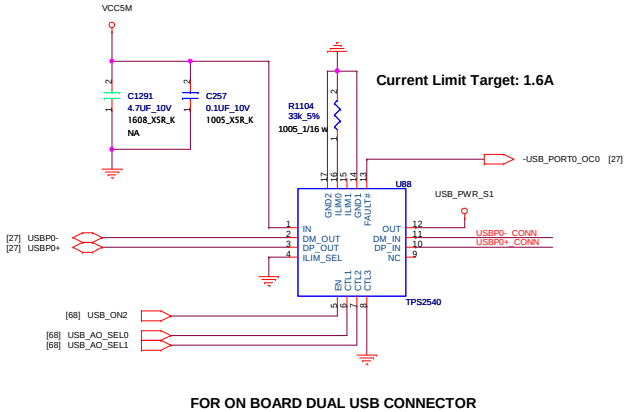

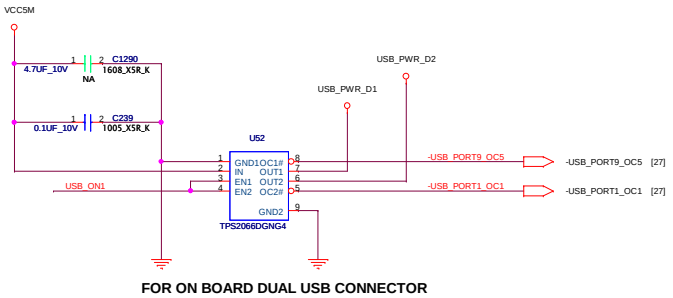

FLEXComputing

Project Name : NOZOMI-3 SWG SDV2	Title : USB POWER/CONN
Size : C	Document Number :
Rev : 2.10	
Date: Monday, June 14, 2010	Sheet : 42 of 99

TABLE MIC HW ENABLE/DISABLE

	ENABLE	DISABLE
R686	NO ASM	ASM
R961	ASM	NO ASM
R119	ASM	NO ASM
FL9	ASM	NO ASM
R22	ASM	NO ASM

LOGIC

U8 CX20672-11Z

Layout Note: place R631 and R632 near dock conn

PLACE UNDER CX20561

PLACE NEAR U8

FLEXComputing

Project Name : NOZOMI-3 SWG SDV2

Title : AUDIO CX20672-11Z

Size : C

Document Number :

Rev : 2.10

Date: Monday, June 14, 2010

Sheet : 43 of 99

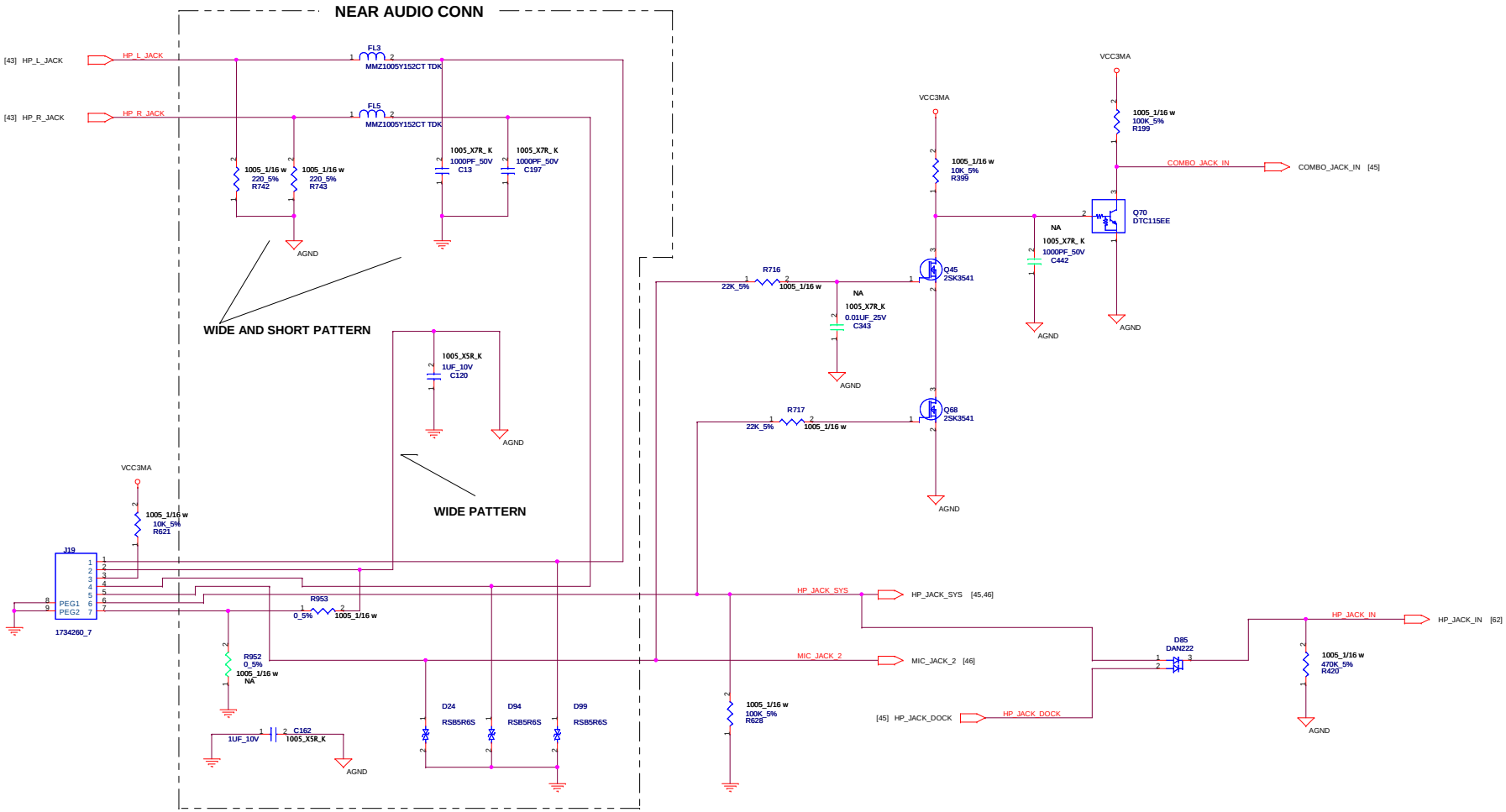

FLEXComputing		
Project Name : NOZOMI-3 SWG SDV2	Title : AUDIO CONN	
Size : C	Document Number :	Rev : 2.10
Date: Monday, June 14, 2010	Sheet : 44 of 99	

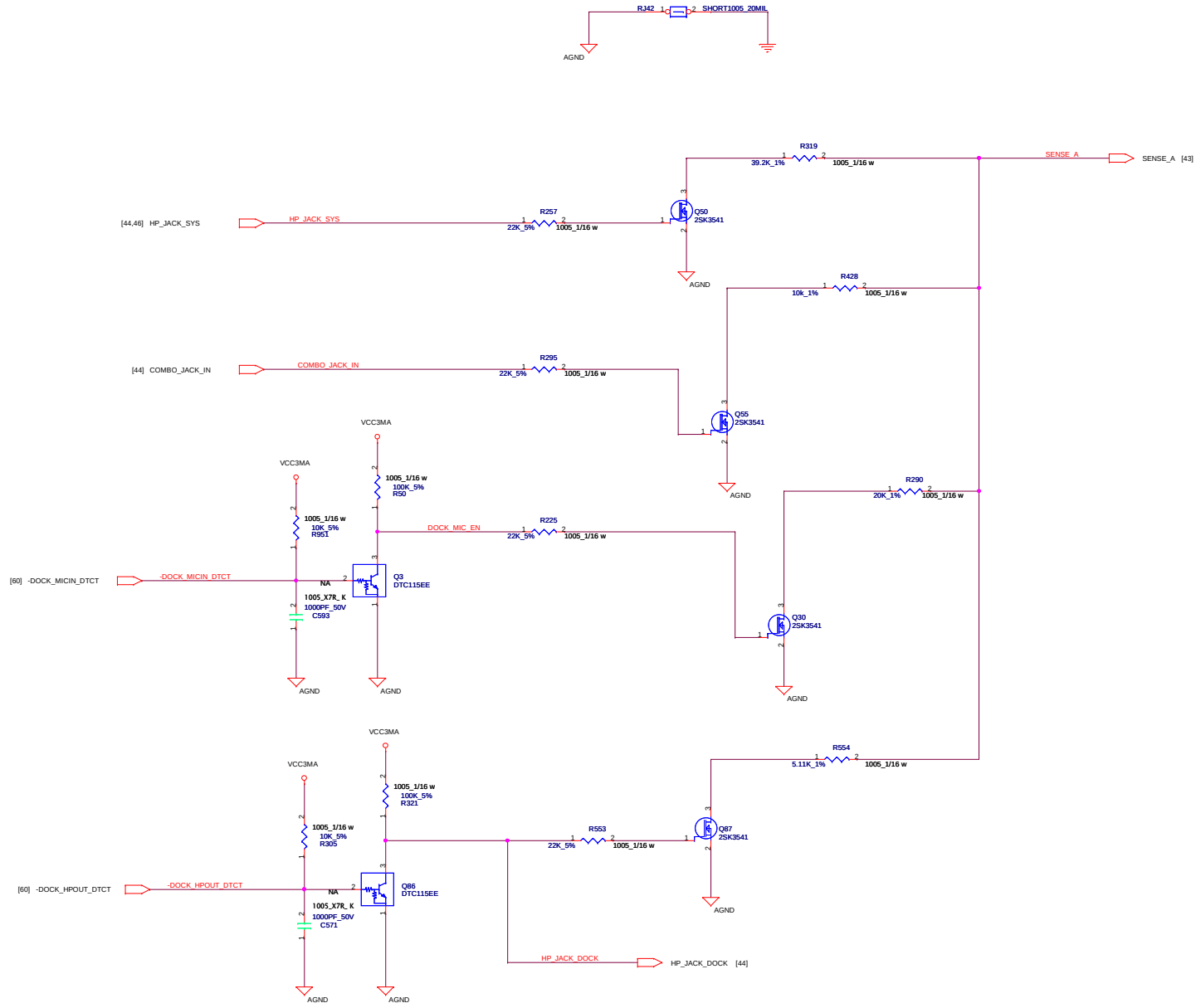

FLEX Computing

Project Name : NOZOMI-3 SWG SDV2	Title : AUDIO JACK SENSE
Size : C	Document Number :
Rev : 2.10	
Date: Monday, June 14, 2010	Sheet : 45 of 99

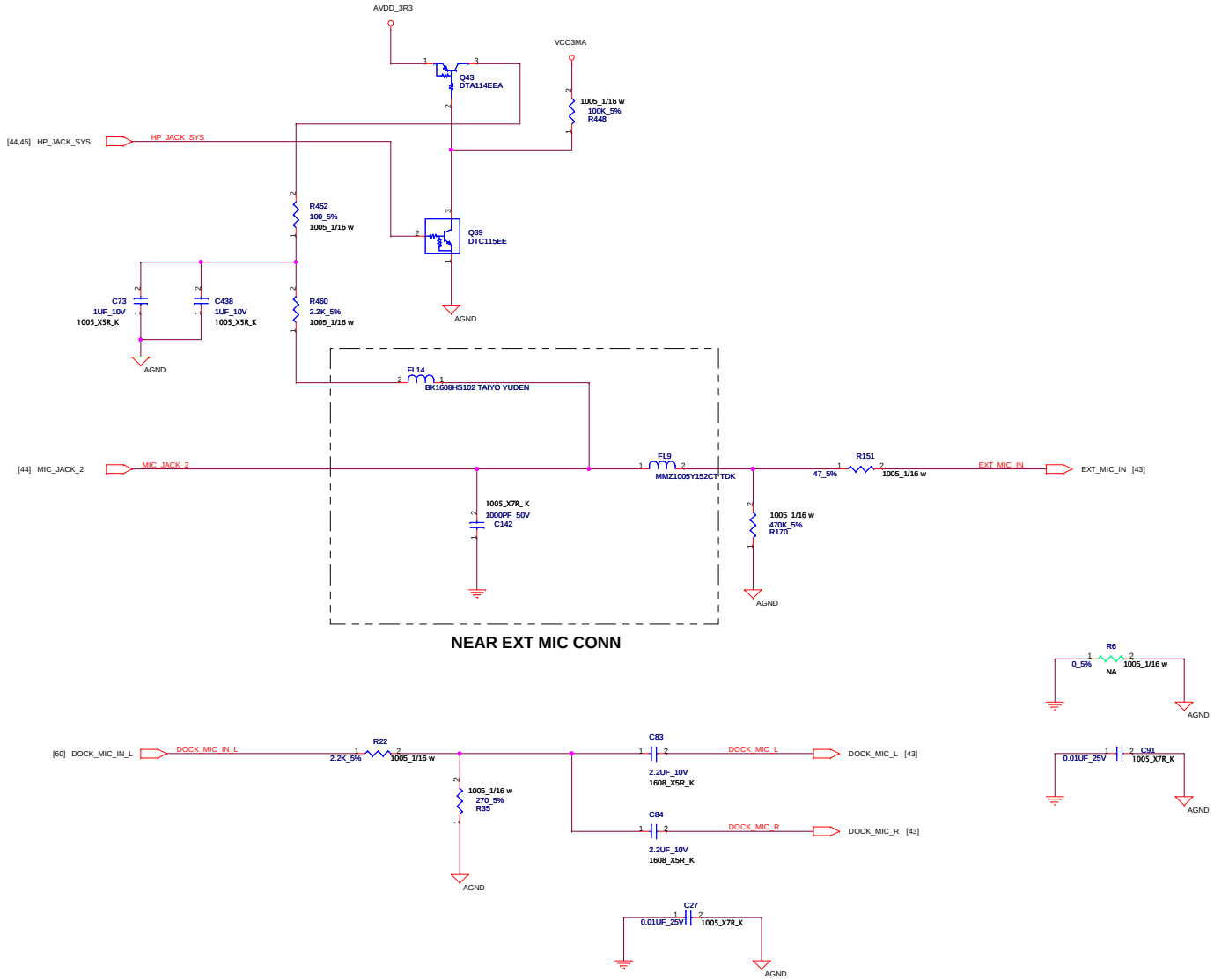

FLEXComputing

Project Name : NOZOMI-3 SWG SDV2	Title : AUDIO EXT MIC I/F
Size : C	Document Number :
Date: Monday, June 14, 2010	Sheet : 46 of 99
	Rev : 2.10

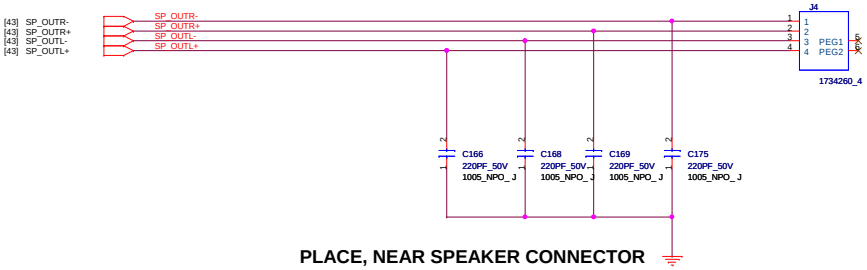

PLACE, NEAR SPEAKER CONNECTOR

FLEX Computing

Project Name : NOZOMI-3 SWG SDV2	Title : AUDIO SPEAKER
Size : C	Document Number :
Date: Monday, June 14, 2010	Sheet : 47 of 99
	Rev : 2.10

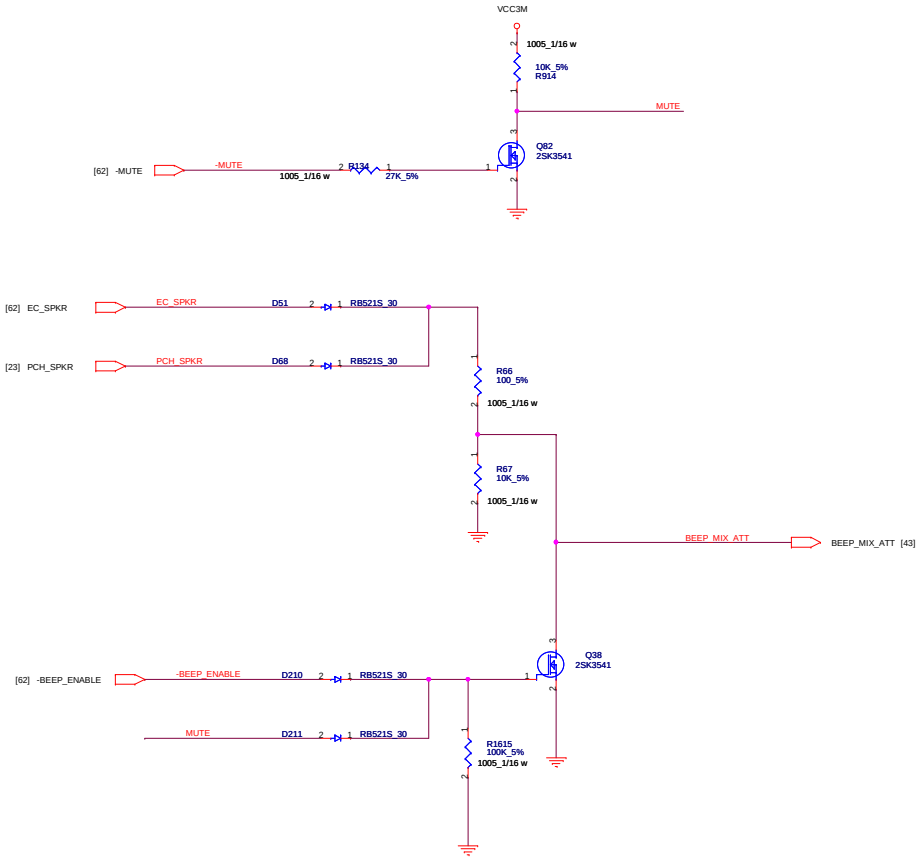

FLEXComputing

Project Name : NOZOMI-3 SWG SDV2	Title : AUDIO BEEP
Size : C	Document Number :
Rev : 2.10	
Date: Monday, June 14, 2010	Sheet : 48 of 99

MDC Connector

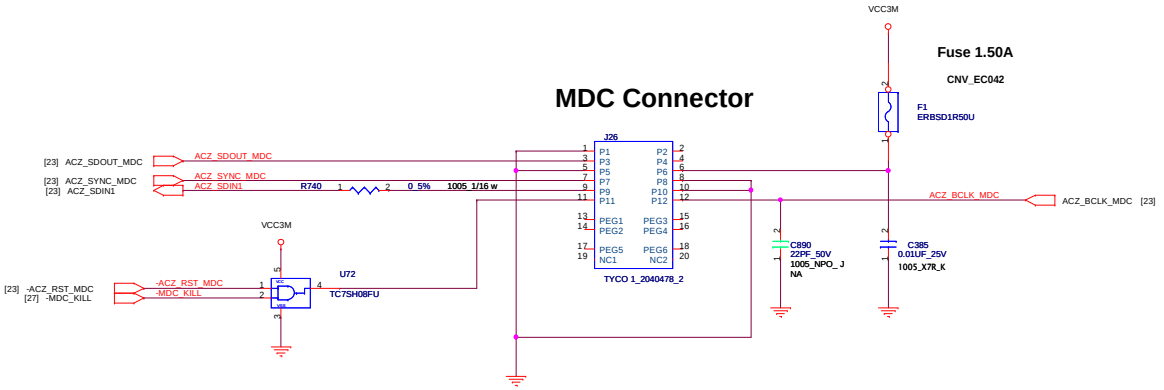

FLEXComputing

Project Name : NOZOMI-3 SWG SDV2	Title : MDC CONN
Size : C	Document Number :
Rev : 2.10	
Date: Monday, June 14, 2010	Sheet : 49 of 99

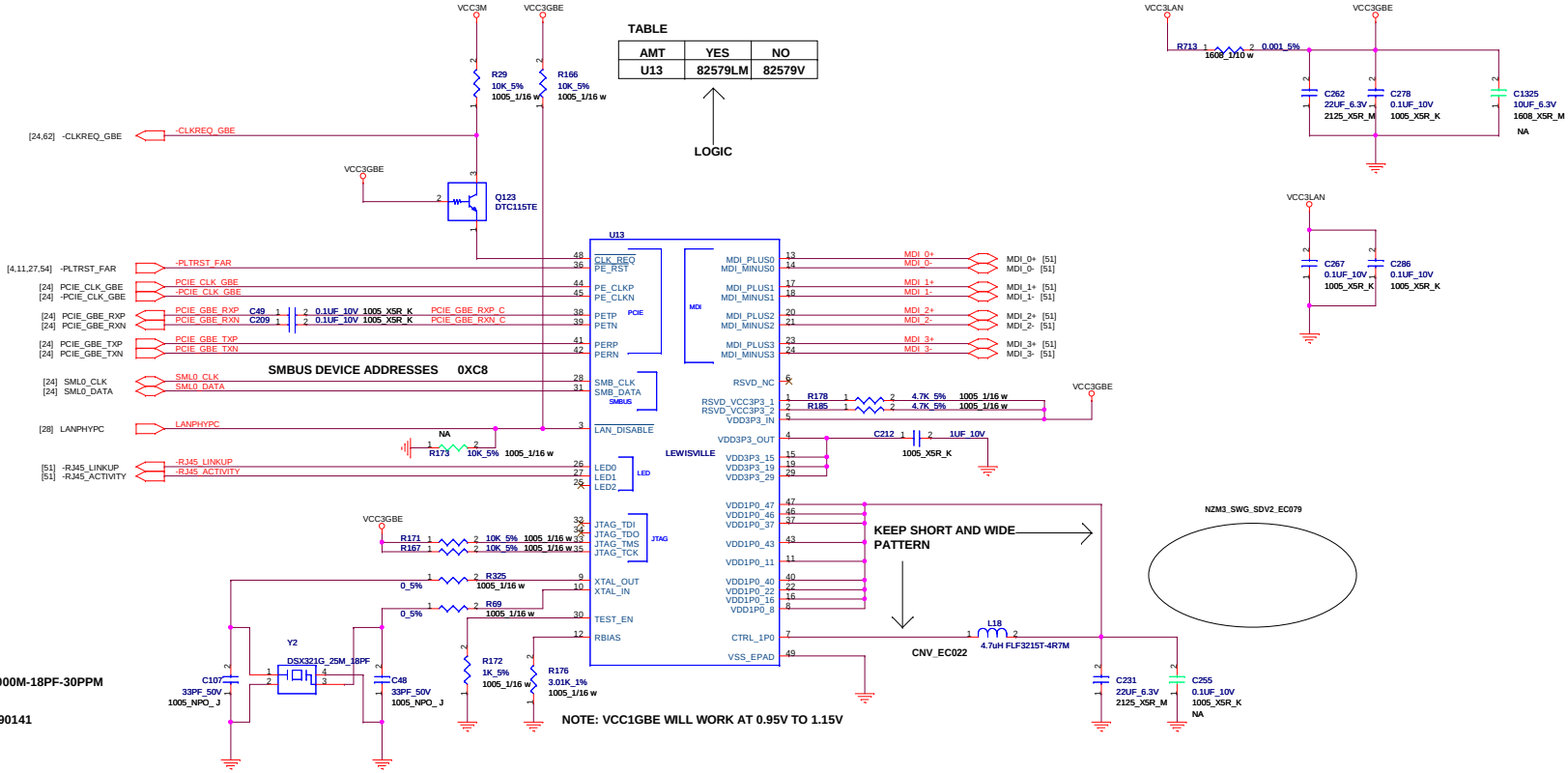

P/N 41U6141
KDS DSX321G-25.000M-18PF-30PPM
TXC 7V25020001
RIVER FCX-04-25MJ90141

FLEX Computing

Project Name : NOZOMI-3 SWG SDV2	Title : GBE LEWISVILLE	
Size : C	Document Number :	Rev : 2.10
Date: Monday, June 14, 2010	Sheet : 50 of 99	

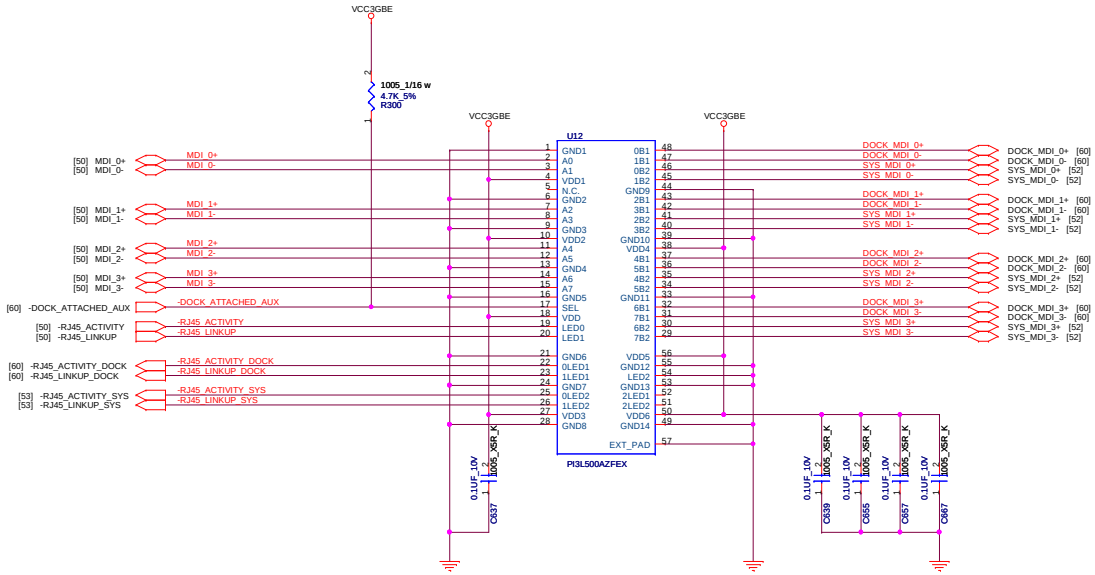

FLEXComputing

Project Name : NOZOMI-3 SWG SDV2	Title : GBE LAN SWITCH
Size : C	Document Number :
Date: Monday, June 14, 2010	Sheet : 51 of 99
	Rev : 2.10

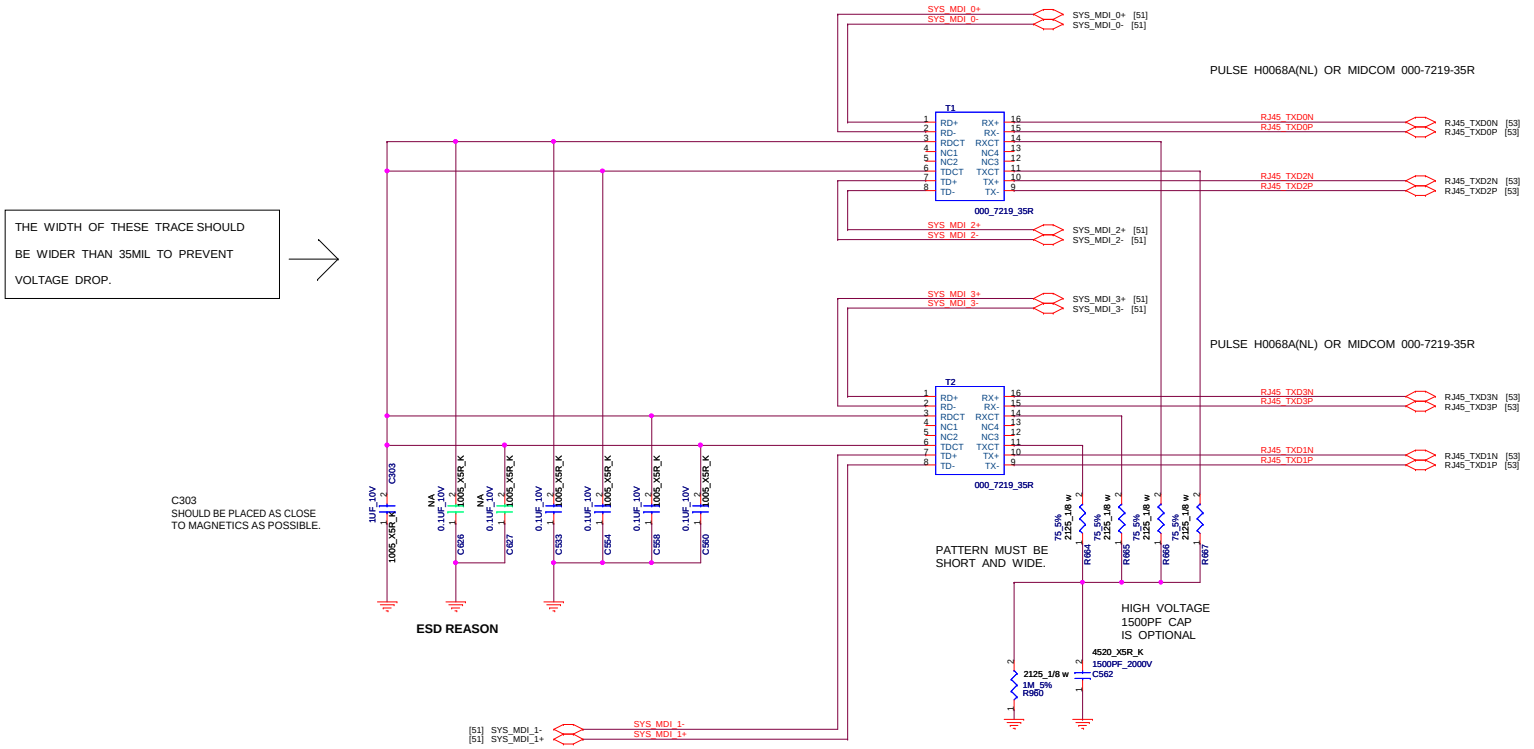

FLEXComputing			
Project Name : NOZOMI-3 SWG SDV2	Title : GBE MAGNETICS		
Size : C	Document Number :		Rev : 2.10
Date: Monday, June 14, 2010		Sheet : 52 of 99	

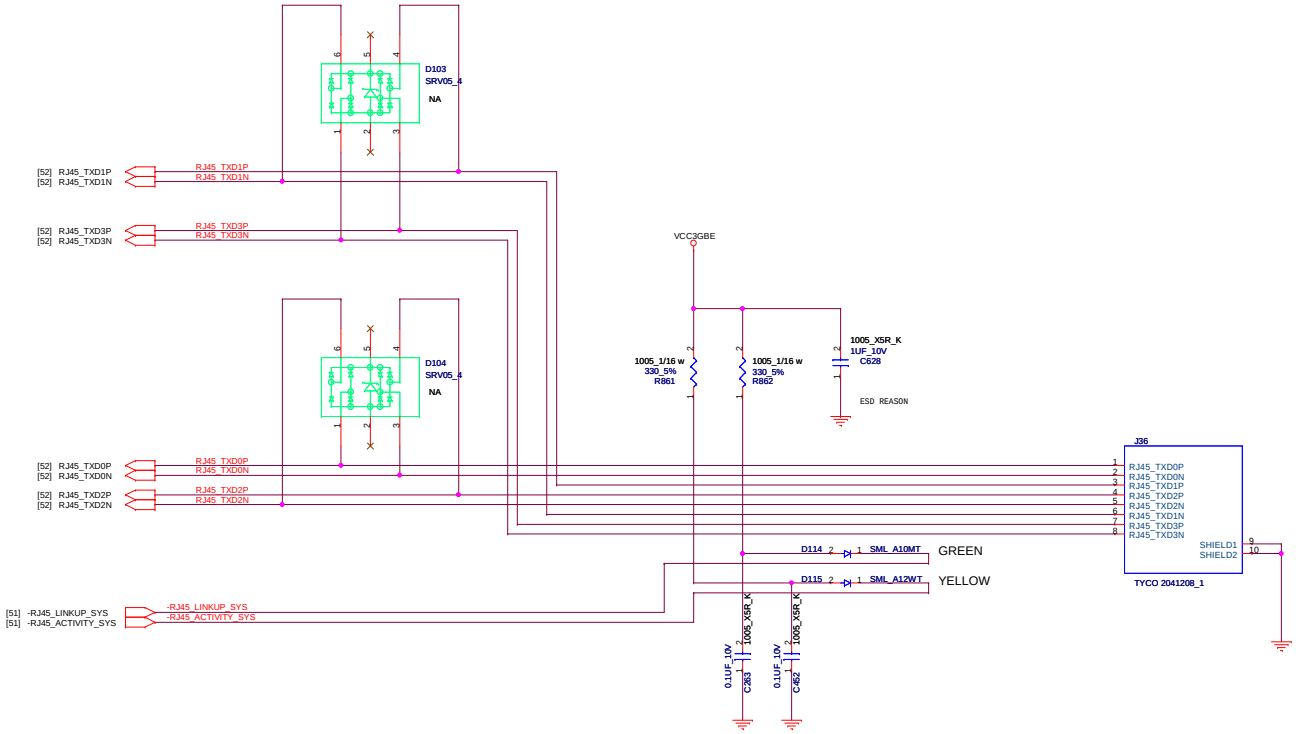

FLEX Computing

Project Name : NOZOMI-3 SWG SDV2	Title : RJ45 CONNECTOR
Size : C	Document Number :
Rev : 2.10	
Date: Monday, June 14, 2010	Sheet : 53 of 99

FULL MINI CARD FOR WWAN

4.1H CONNECTOR

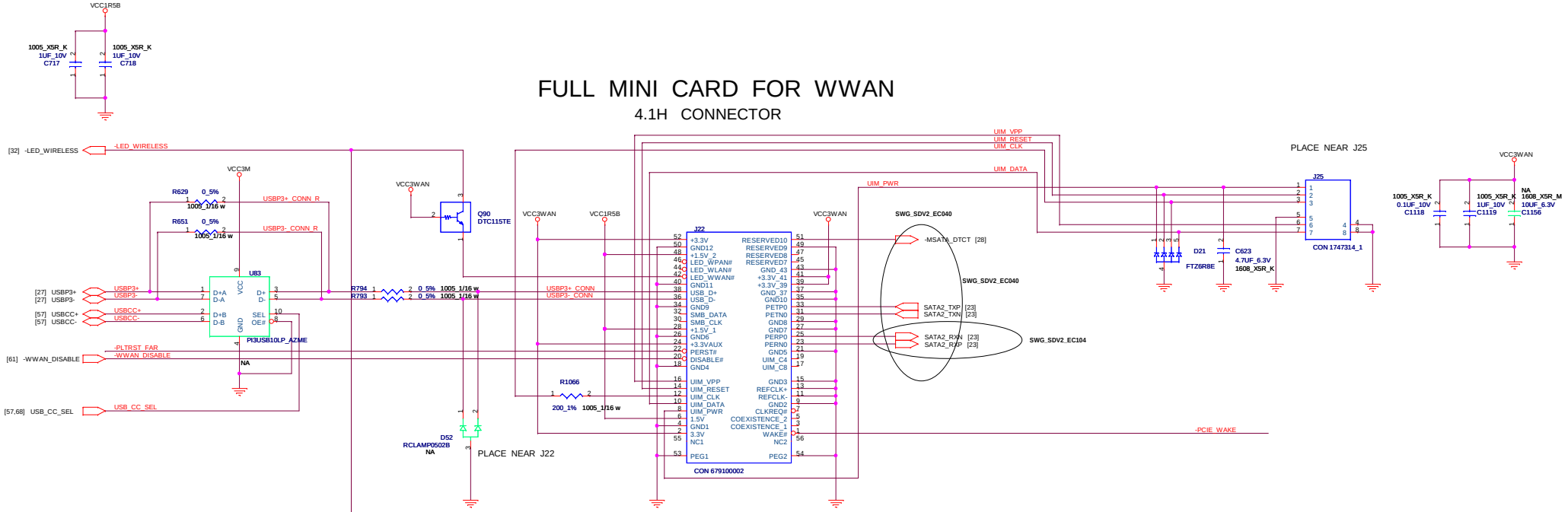

FULL MINI CARD FOR WLAN

7.0H CONNECTOR

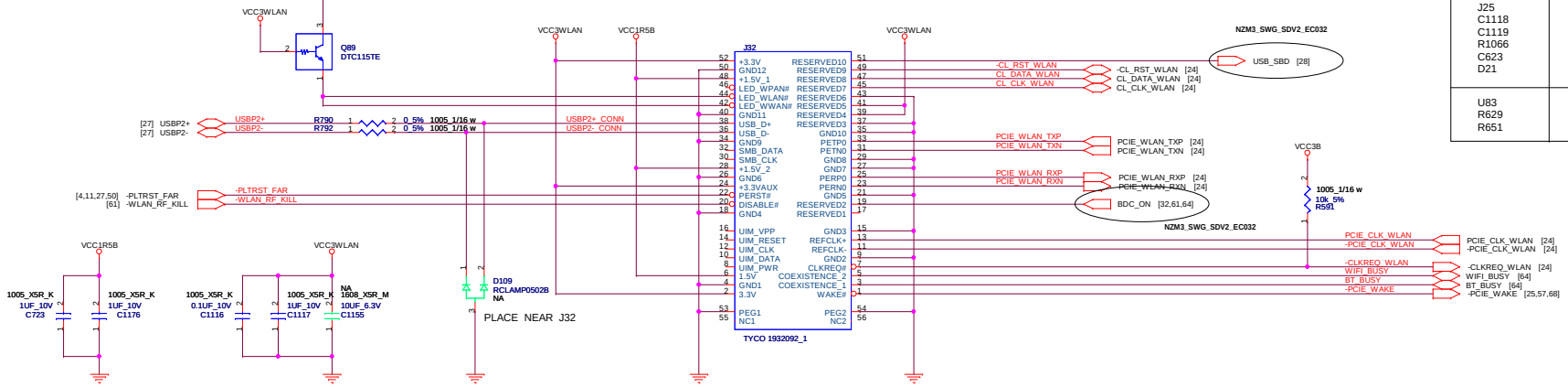

TABLE

WWAN CONSTANT CONNECT	W/WWAN VER.2	W/WWAN VER.1/NO	W/O WWAN NO
J22	ASM	ASM	NO_ASM
J25	ASM	ASM	NO_ASM
C1118	ASM	ASM	NO_ASM
C1119	ASM	ASM	NO_ASM
R1066	ASM	ASM	NO_ASM
C623	ASM	ASM	NO_ASM
D21	ASM	ASM	NO_ASM
U83	ASM	NO_ASM	NO_ASM
R629	NO_ASM	ASM	NO_ASM
R651	NO_ASM	ASM	NO_ASM

LOGIC

FLEXComputing

Project Name : NOZOMI-3 SWG SDV2	Title : PCIE MINI CARD SLOT	
Size : C	Document Number :	Rev : 2.10
Date: Monday, June 14, 2010	Sheet : 54 of 99	

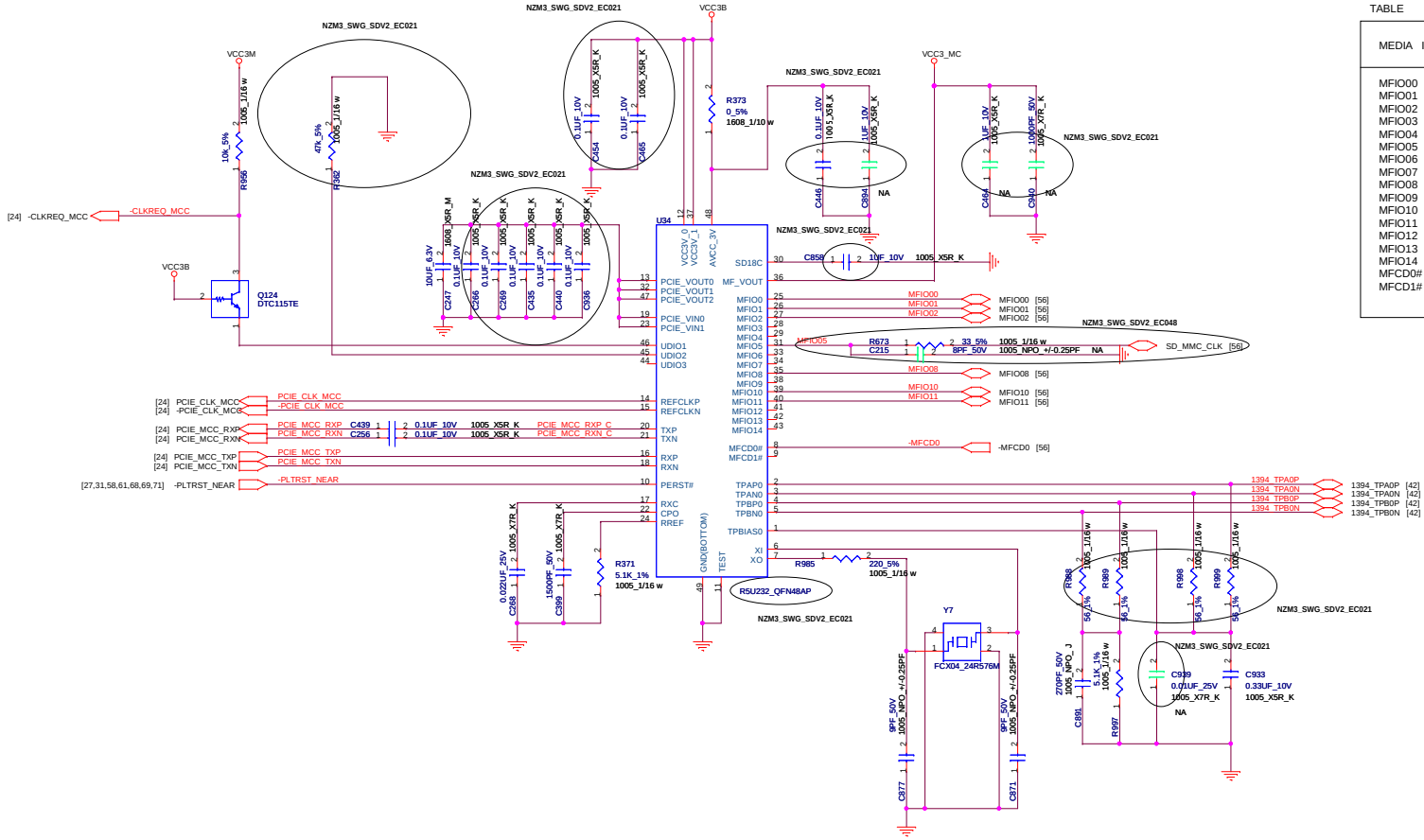

TABLE

MEDIA I/F	SD/MMC	MEMORSTICK	XD
MFIO00	SDWP#	MSBS	XD_D7
MFIO01	SD_D1		XD_D6
MFIO02	SD_D0	MS_D1	XD_D5
MFIO03	(SD_D7)		XD_D4
MFIO04	(SD_D6)	(MS_D5)	XD_D3
MFIO05	SD_CLK	MS_D0	XD_D2
MFIO06			XD_D1
MFIO07	(SD_D5)	(MS_D4)	XD_D0
MFIO08	SD_CMD	MS_D2	XD_WP#
MFIO09	(SD_D4)	(MS_D6)	XD_WE#
MFIO10	SD_D3	MS_D3	XD_ALE
MFIO11	SD_D2		XD_CLE
MFIO12			XD_CE#
MFIO13		(MS_D7)	XD_RE#
MFIO14		MS_CLK	XD_R/B#
MFCD0#	SDCD#		XDCD0#
MFCD1#		MSINS#	XDCD1#

UDIO Pin Assignment Table

UDIO	Default
01	CLKREQ#
02	SCL/SROM_EN
03	SDA

MFCDxN Detection Table

MFCDxN		Card Type
1	0	
H	H	(No Card)
H	L	SD Card/MMC
L	H	MemoryStick
L	L	XD Card

FLEXComputing

Project Name : NOZOMI-3 SWG SDV2	Title : 1394/MEDIA CARD CONTROLLER	
Size : C	Document Number :	Rev : 2.10
Date: Monday, June 14, 2010	Sheet : 55 of 99	

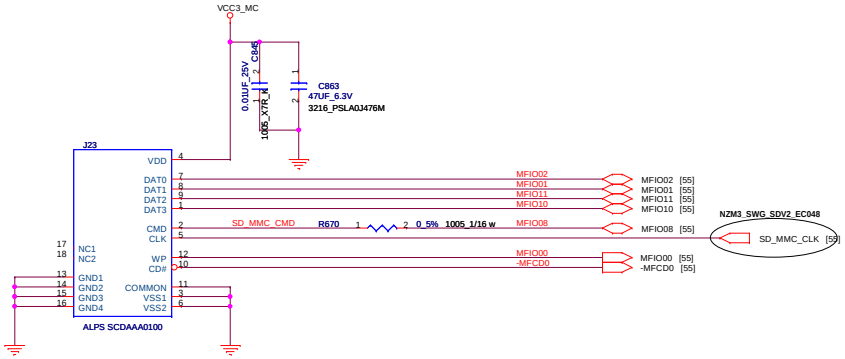

FLEX Computing

Project Name : NOZOMI-3 SWG SDV2	Title : MEDIA CARD INTERFACE	
Size : C	Document Number :	Rev : 2.10
Date: Monday, June 14, 2010	Sheet : 56 of 99	

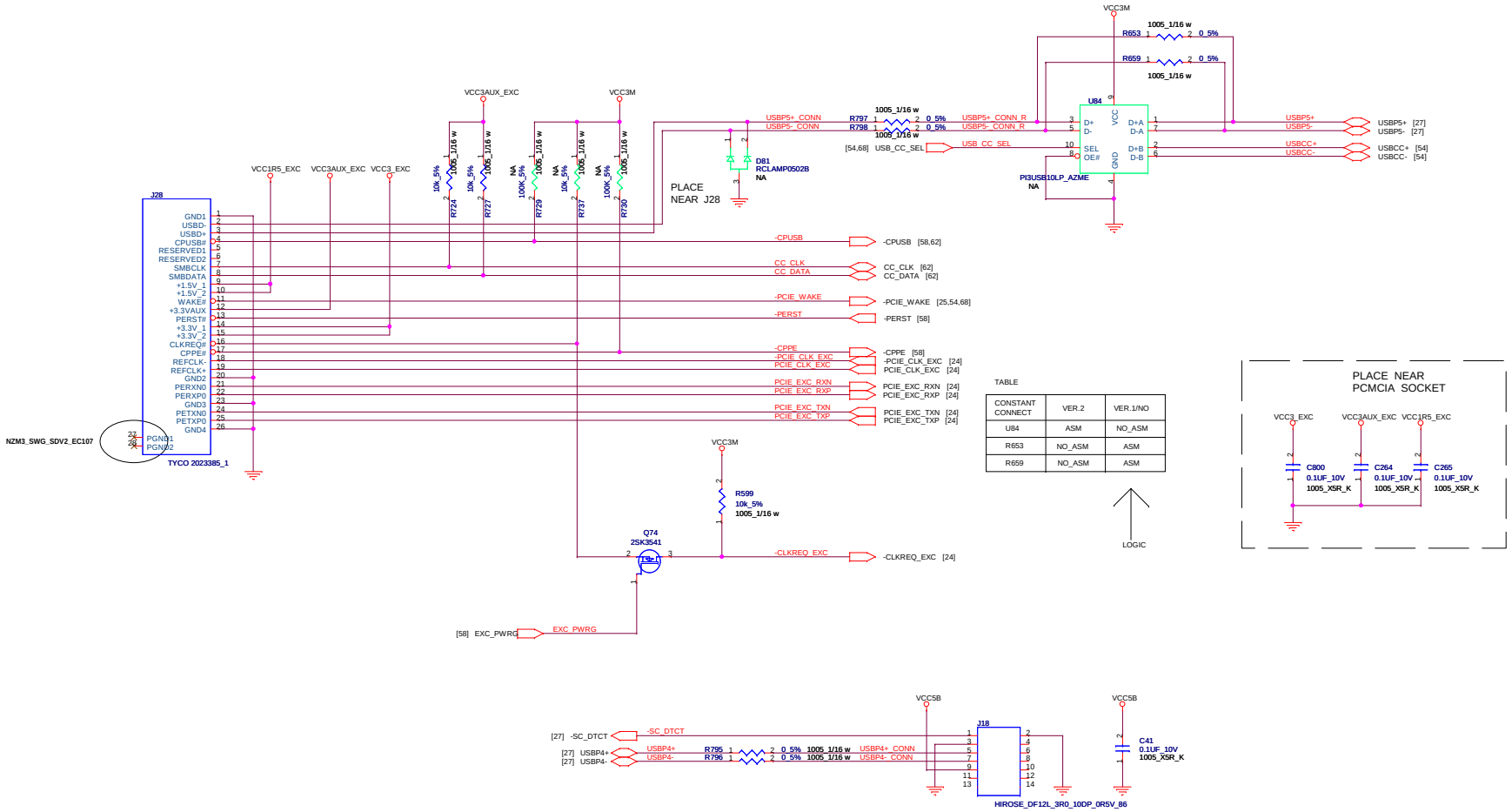

FLEXComputing		NZM3_SWG_SDV2_EC077
Project Name : NOZOMI-3 SWG SDV2	Title : EXPRESS CARD/SMART CARD I/F	
Size : C	Document Number :	Rev : 2.10
Date: Monday, June 14, 2010	Sheet : 57 of 99	

TABLE

CONSTANT CONNECT	VER.2/VER.1	NO
U48	BD4156MUV TPS2231MRGPR-3	TPS2231MRGPR BD4156MUV W83L351YG
R1501	ASM	NO_ASM

LOGIC

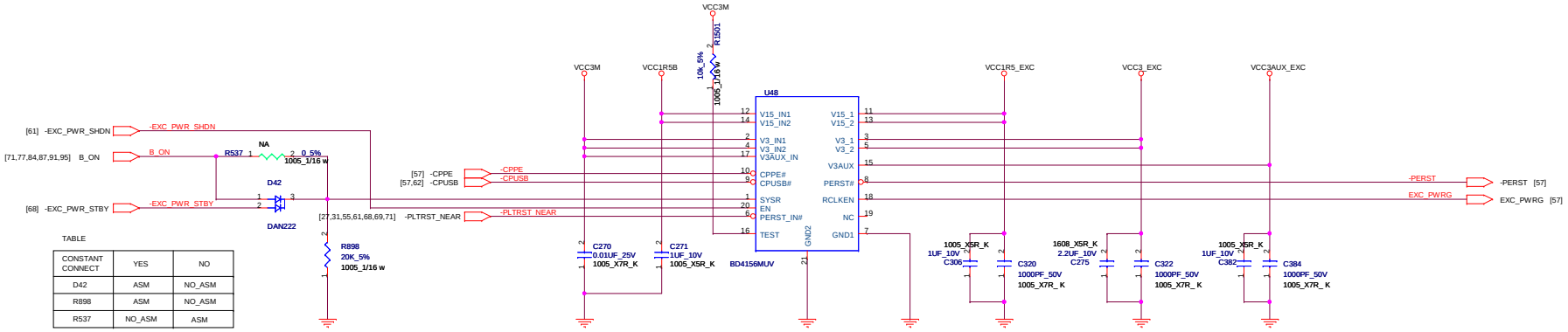

TABLE

CONSTANT CONNECT	YES	NO
D42	ASM	NO_ASM
R898	ASM	NO_ASM
R537	NO_ASM	ASM

LOGIC

FLEXComputing

Project Name : NOZOMI-3 SWG SDV2	Title : SLOT POWER CONTROL
Size : C	Document Number :
Date: Monday, June 14, 2010	Sheet : 58 of 99
	Rev : 2.10

TABLE

SF100 PIN HEADER INTERFACE (TOP VIEW)					
1	VCC	D12.1	GND	GND	2
3	CS#	R322.2	R681.2	CLK	4
5	MISO	R694.2	R674.2	MOSI	6
7	(KEY)	N/A	N/A	(RESET)	8

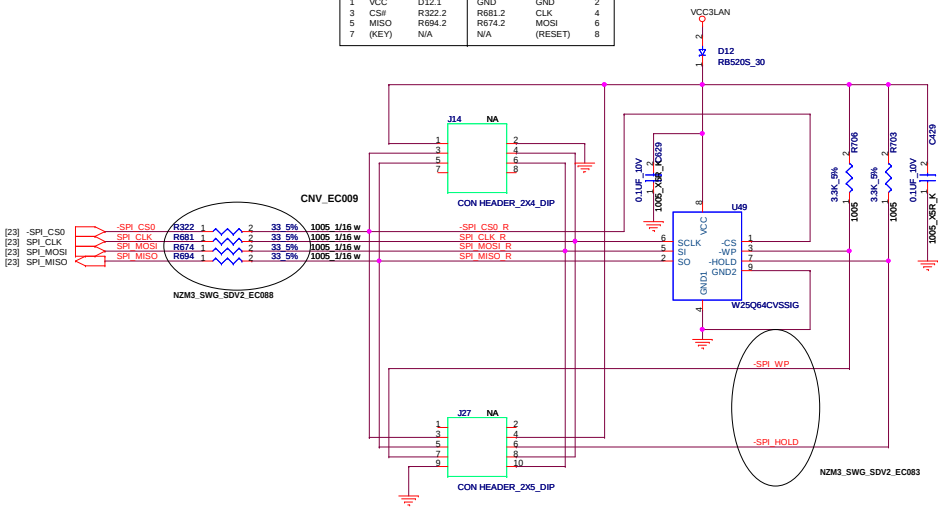

TABLE

EM100 PIN HEADER INTERFACE (TOP VIEW)			
1	(HOLD1#)	(CS1#)	2
3	CS0#	VCC	4
5	MISO	HOLD0#	6
7	WP0#	CLK	8
9	GND	MOSI	10

TABLE

AMT	YES	NO	NO
RPAT	YES	YES	NO
U49	8MB	8MB	4MB

LOGIC

8MB SOIC8
MACRONIX MX25L6436EM2I-10G
WINBOND W25Q64BVSSIG
WINBOND W25Q64CVSSIG

8MB WSON8
NUMONYX M25PX64-VMD6TG

4MB SOIC8
MACRONIX MX25L3236DM2I-10G
WINBOND W25Q32BVSSIG
NUMONYX M25PX32-VMW6F

FLEXComputing NZM3_SWG_SDV2_EC077

Project Name : NOZOMI-3 SWG SDV2
Title : SPI FLASH
Size : C
Document Number :
Rev : 2.10
Date: Monday, June 14, 2010
Sheet : 59 of 99

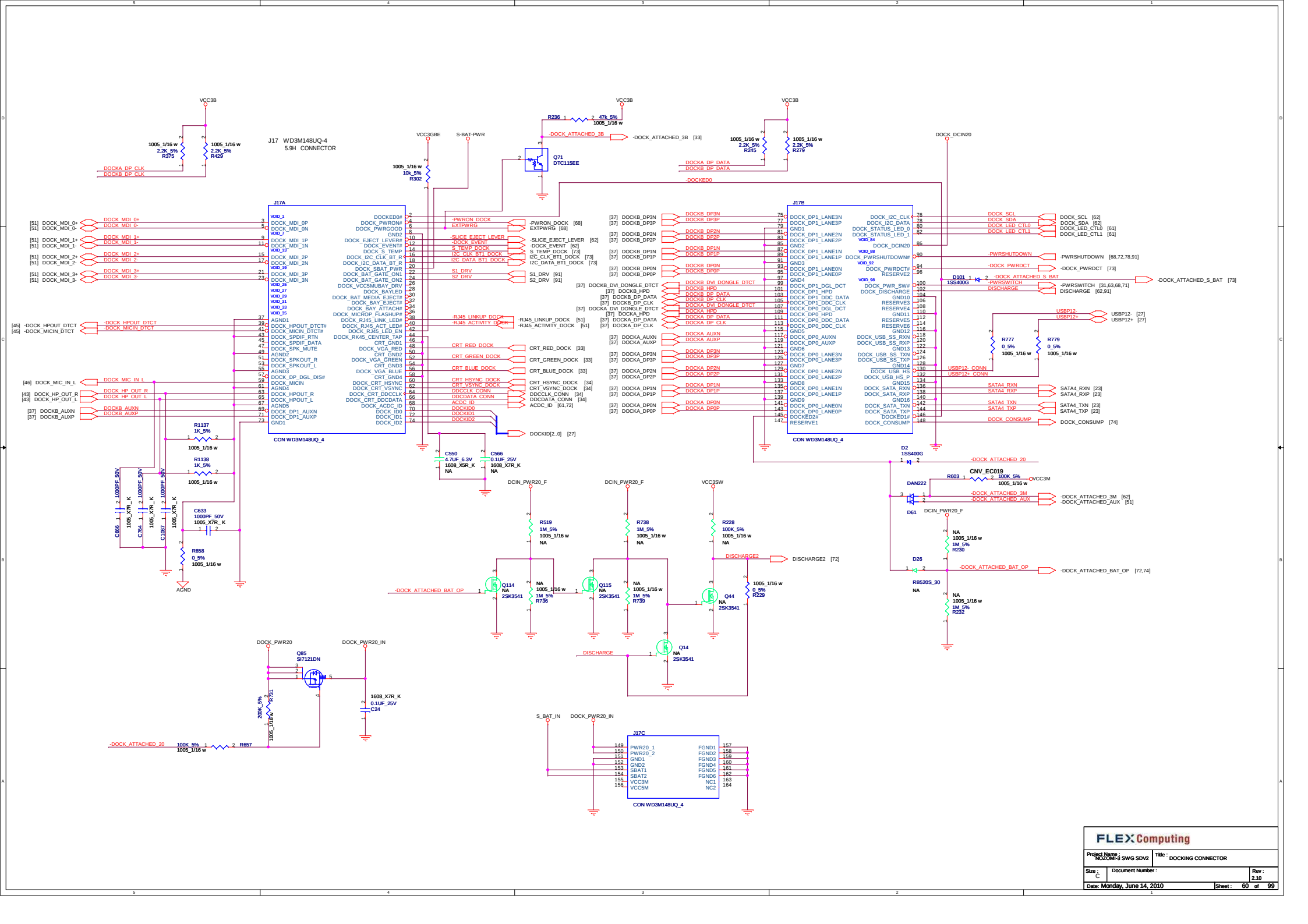
J17 WD3M148UQ-4
5.9H CONNECTOR
J17A
CON WD3M148UQ_4
J17B
CON WD3M148UQ_4
J17C
CON WD3M148UQ_4
Q71 DTC115EE
Q114 NA 2SK3541
Q115 NA 2SK3541
Q44 NA 2SK3541
Q14 NA 2SK3541
Q85 SI7121DN
D101 1SS400G
D2 1SS400G
D61 DAN222
D26 RB520S_30
CNV_EC019
DOCKING CONNECTOR
FLEX Computing
Project Name : NOZOMI-3 SWG SDV2
Title : DOCKING CONNECTOR
Size : C
Document Number :
Rev : 2.10
Date: Monday, June 14, 2010
Sheet : 60 of 99

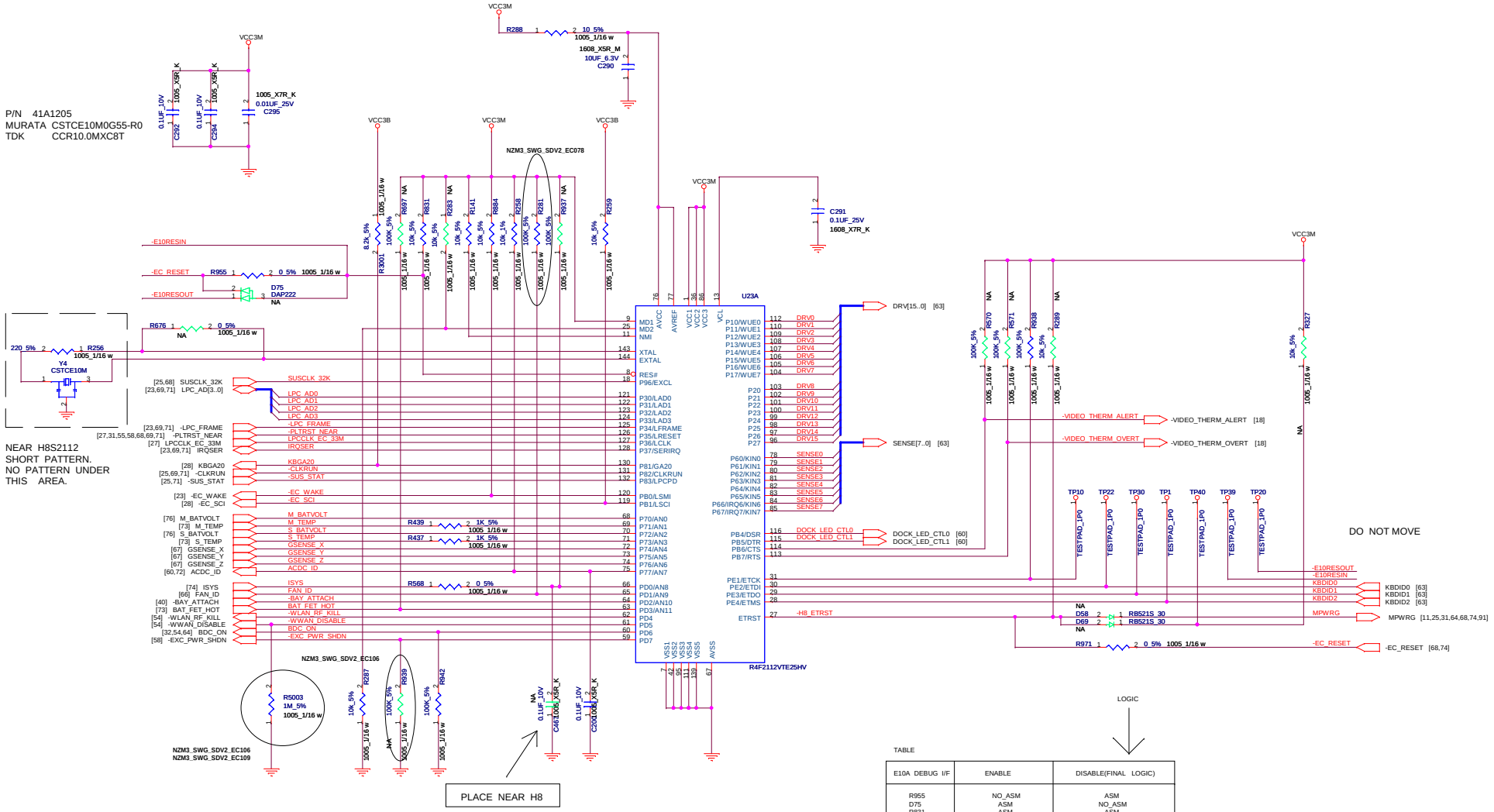

TABLE

E10A DEBUG I/F	ENABLE	DISABLE(FINAL LOGIC)
R955 D75 R831	NO_ASM ASM ASM	ASM NO_ASM ASM
R971 D58 D69 R289 R327	NO_ASM ASM ASM ASM ASM	ASM NO_ASM NO_ASM NO_ASM NO_ASM
R283 R287	ASM NO_ASM	NO_ASM ASM
R881 R218	ASM NO_ASM	NO_ASM ASM
RN25	NO_ASM	ASM

FLEX Computing

Project Name : NOZOMI-3 SWG SDV2	Title : H8S/2113 (1/2)	
Size : C	Document Number :	Rev : 2.10
Date: Monday, June 14, 2010	Sheet : 61 of 99	

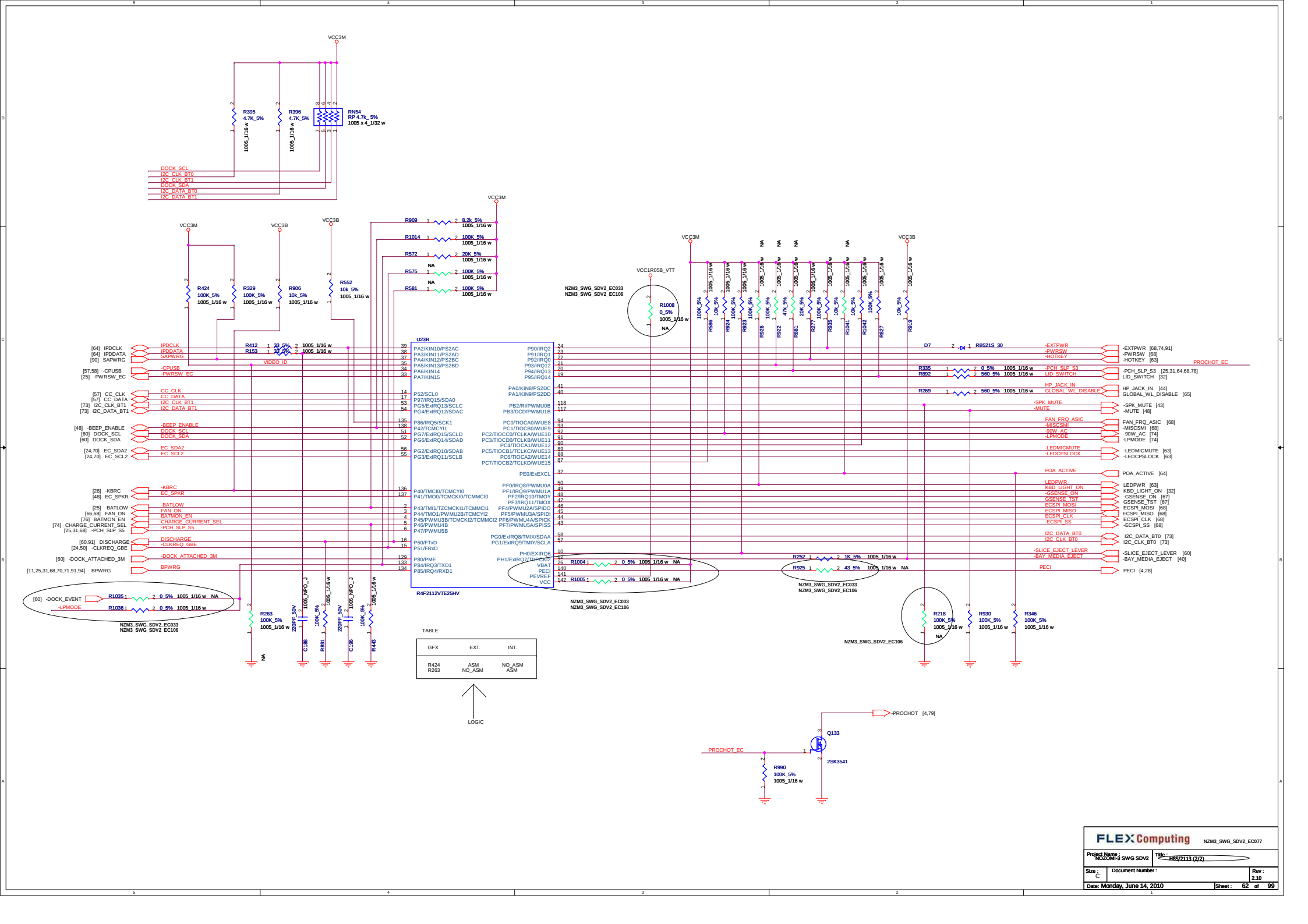
VCC3M
R395 4.7K_5%
R396 4.7K_5%
RN54 RP 4.7k_5% 1005 x 4_1/32 w
DOCK_SCL
I2C_CLK_BT0
I2C_CLK_BT1
DOCK_SDA
I2C_DATA_BT0
I2C_DATA_BT1
VCC3B
R424 100K_5%
R329 100K_5%
R906 10k_5%
R552 10k_5%
R909 8.2k_5%
R1014 100K_5%
R572 20K_5%
R575 100K_5%
R581 100K_5%
NA
U23B
R4F2112VTE25HV
R412 33_5%
R153 33_5%
VIDEO_ID
IPDCLK
IPDDATA
SAPWRG
-CPUSB
-PWRSW_EC
CC_CLK
CC_DATA
I2C_CLK_BT1
I2C_DATA_BT1
-BEEP_ENABLE
DOCK_SCL
DOCK_SDA
EC_SDA2
EC_SCL2
-KBRC
EC_SPKR
-BATLOW
FAN_ON
BATMON_EN
CHARGE_CURRENT_SEL
-PCH_SLP_S5
DISCHARGE
-CLKREQ_GBE
-DOCK_ATTACHED_3M
BPWRG
R1035 0_5% -DOCK_EVENT
R1036 0_5% -LPMODE
NZM3_SWG_SDV2_EC033
NZM3_SWG_SDV2_EC106
R263 100K_5%
C188 220PF_50V
R891 100K_5%
C186 220PF_50V
R443 100K_5%
TABLE
GFX EXT. INT.
R424 ASM NO_ASM
R263 NO_ASM ASM
LOGIC
VCC1R05B_VTT
R1008 0_5%
R1004 0_5%
R1005 0_5%
PECI
VBAT
VCC
PEVREF
R252 1K_5%
R925 43_5%
R218 100K_5%
R930 100K_5%
R346 100K_5%
D7 RB521S_30
R335 0_5%
R892 560_5%
R269 560_5%
-EXTPWR
-PWRSW
-HOTKEY
PROCHOT_EC
-PCH_SLP_S3
LID_SWITCH
HP_JACK_IN
GLOBAL_WL_DISABLE
-SPK_MUTE
-MUTE
FAN_FRQ_ASIC
-MISCSMI
-90W_AC
-LPMODE
-LEDMICMUTE
-LEDCPSLOCK
POA_ACTIVE
LEDPWR
KBD_LIGHT_ON
-GSENSE_ON
GSENSE_TST
ECSPI_MOSI
ECSPI_MISO
ECSPI_CLK
-ECSPI_SS
I2C_DATA_BT0
I2C_CLK_BT0
-SLICE_EJECT_LEVER
-BAY_MEDIA_EJECT
Q133
2SK3541
R990 100K_5%
-PROCHOT [4,79]
FLEXComputing
NZM3_SWG_SDV2_EC077
Project Name : NOZOMI-3 SWG SDV2
Title : HBS/2113 (2/2)
Size : C
Document Number :
Rev : 2.10
Date: Monday, June 14, 2010
Sheet : 62 of 99

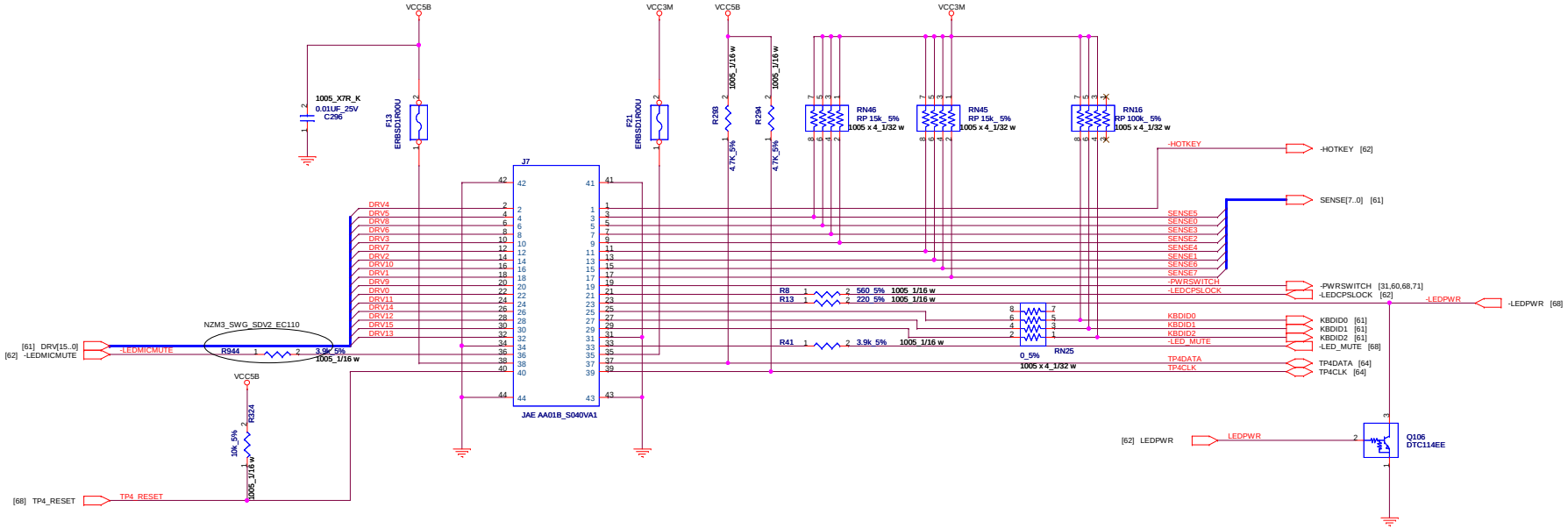

FLEXComputing			
Project Name : NOZOMI-3 SWG SDV2	Title : KEYBOARD CONNECTOR		
Size : C	Document Number :		Rev : 2.10
Date: Monday, June 14, 2010		Sheet : 63 of 99	

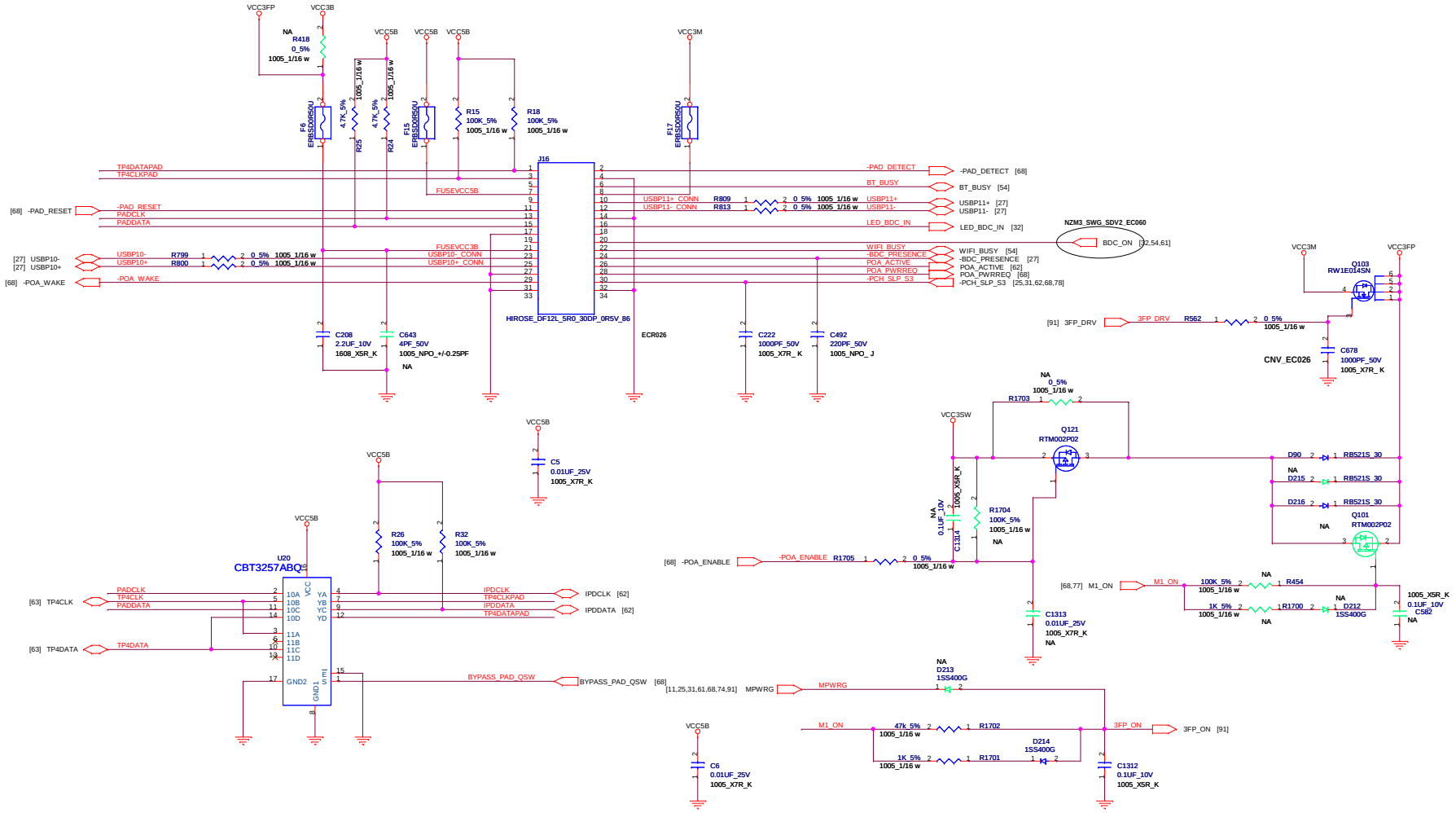

FLEXComputing

Project Name : NOZOMI-3 SWG SDV2	Title : TOUCH PAD CONNECTOR
Size : C	Document Number :
Date: Monday, June 14, 2010	Rev : 2.10
	Sheet : 64 of 99

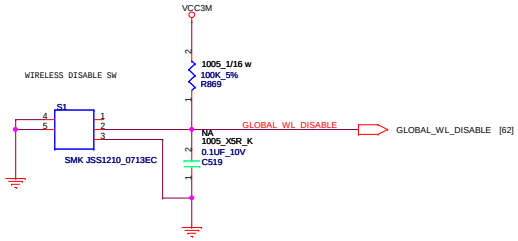

FLEX Computing

Project Name : NOZOMI-3 SWG SDV2	Title : WIRELESS DISABLE SW
Size : C	Document Number :
Date: Monday, June 14, 2010	Sheet : 65 of 99
	Rev : 2.10

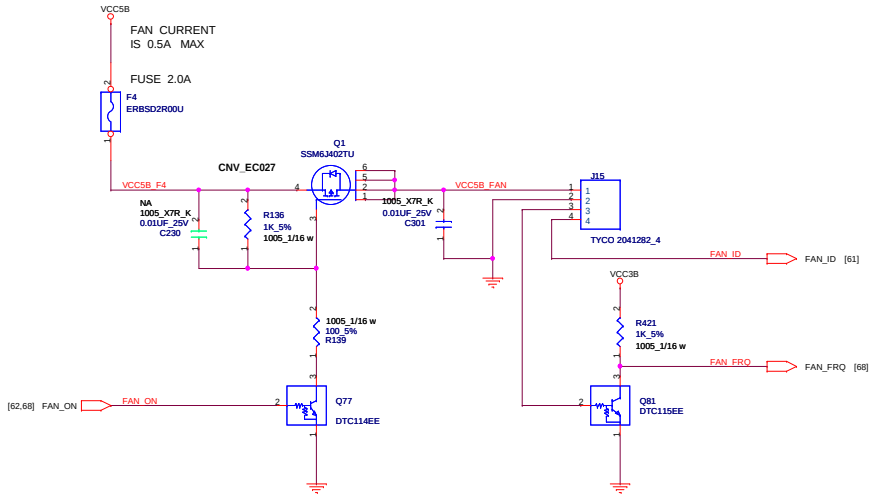

FLEX Computing

Project Name : NOZOMI-3 SWG SDV2	Title : FAN CONNECTOR	
Size : C	Document Number :	Rev : 2.10
Date: Monday, June 14, 2010	Sheet : 66 of 99	

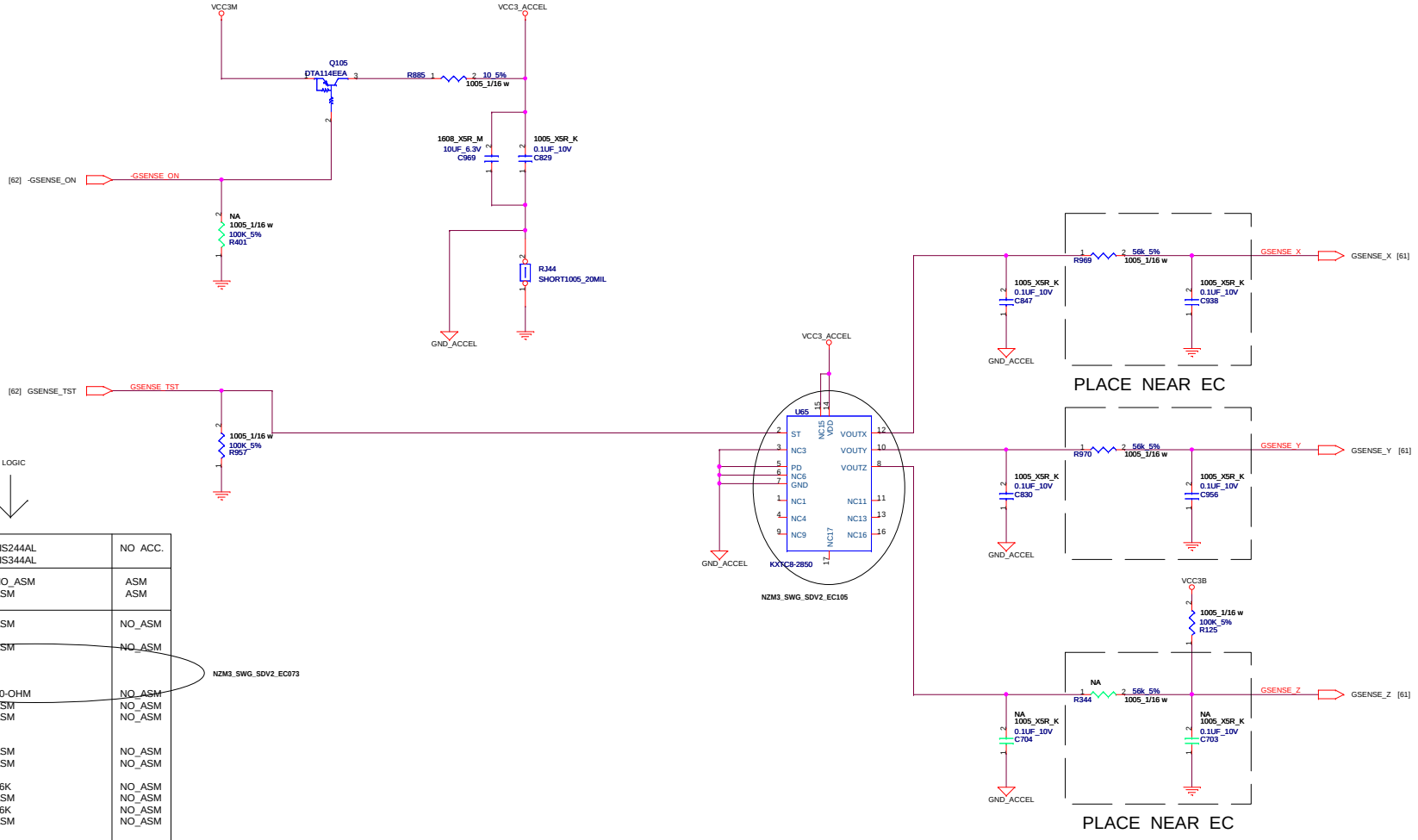

TABLE

	LIS244AL LIS344AL	NO ACC.
R401 R957	NO_ASM ASM	ASM ASM
U65	ASM	NO_ASM
Q105	ASM	NO_ASM
R885	10-OHM	NO_ASM
C829	ASM	NO_ASM
C969	ASM	NO_ASM
C830	ASM	NO_ASM
C847	ASM	NO_ASM
R969	56K	NO_ASM
C938	ASM	NO_ASM
R970	56K	NO_ASM
C956	ASM	NO_ASM
C704	NO_ASM	NO_ASM
R344	NO_ASM	NO_ASM
C703	NO_ASM	NO_ASM
R125	ASM	ASM

NZM3_SWG_SDV2_EC073

FLEX Computing

Project Name : NOZOMI-3 SWG SDV2	Title : G-SENSOR
Size : C	Document Number :
Rev : 2.10	
Date: Monday, June 14, 2010	Sheet : 67 of 99

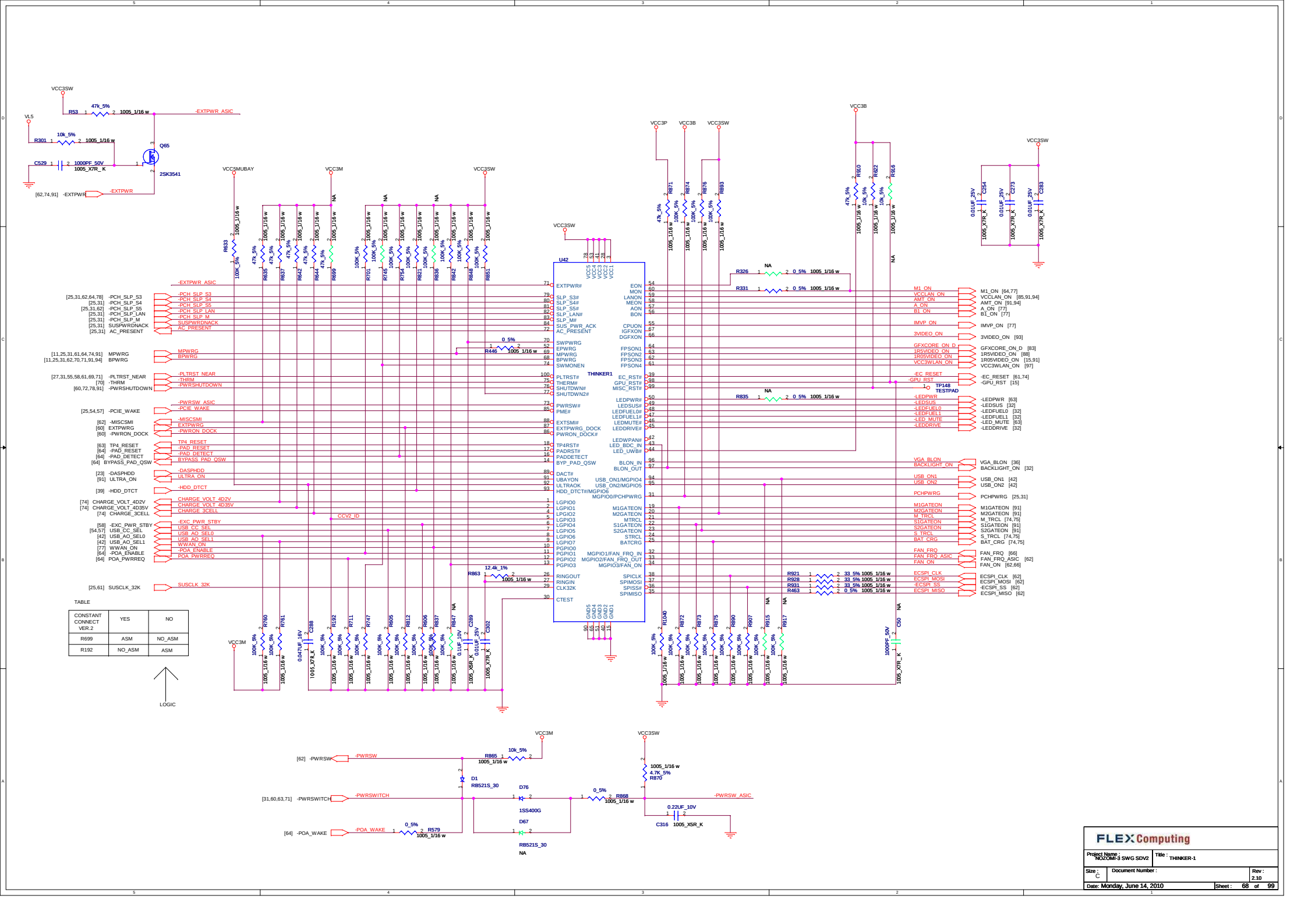

FLEX Computing

Project Name : NOZOMI-3 SWG SDV2	Title : THINKER-1		
Size : C	Document Number :		Rev : 2.10
Date: Monday, June 14, 2010		Sheet : 68 of 99	

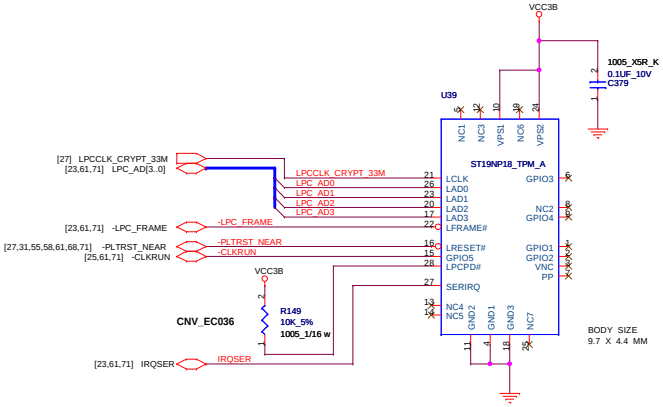

TABLE

REF DES	NO TPM	ST MICRO ST19NP18-TPM-A
U39 C379 R149	NO_ASM NO_ASM NO_ASM	ASM ASM ASM
R212 R270	ASM NO_ASM	NO_ASM ASM

LOGIC

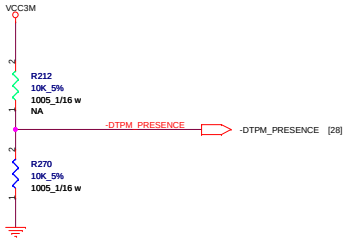

FLEXComputing

Project Name : NOZOMI-3 SWG SDV2	Title : TPM
Size : C	Document Number :
Date: Monday, June 14, 2010	Sheet : 69 of 99
	Rev : 2.10

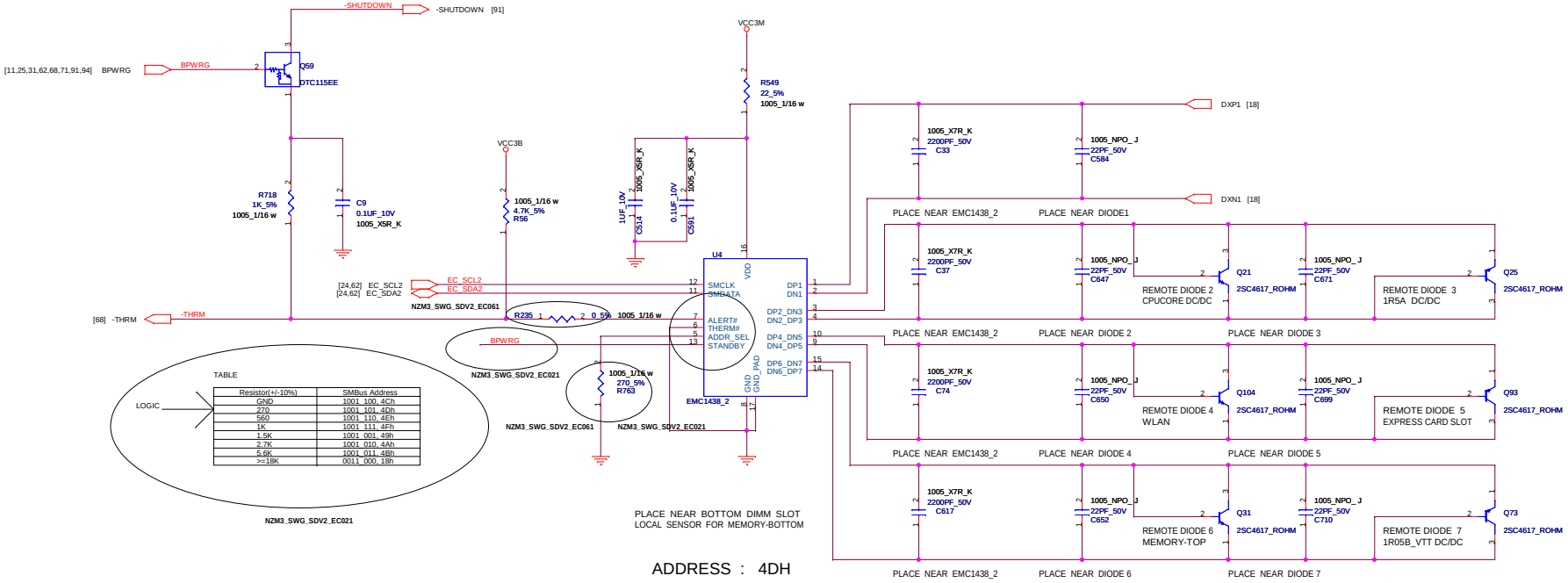

FLEX Computing

Project Name : NOZOMI-3 SWG SDV2	Title : THERMAL SENSOR	
Size : C	Document Number :	Rev : 2.10
Date: Monday, June 14, 2010	Sheet : 70 of 99	

TABLE

REF DES	ENABLE	DISABLE
J5	ASM	NO_ASM
R220	ASM	NO_ASM

LOGIC

PHILIPS 1024 X 8
EEPROM W/ACCESS
PROTECTION

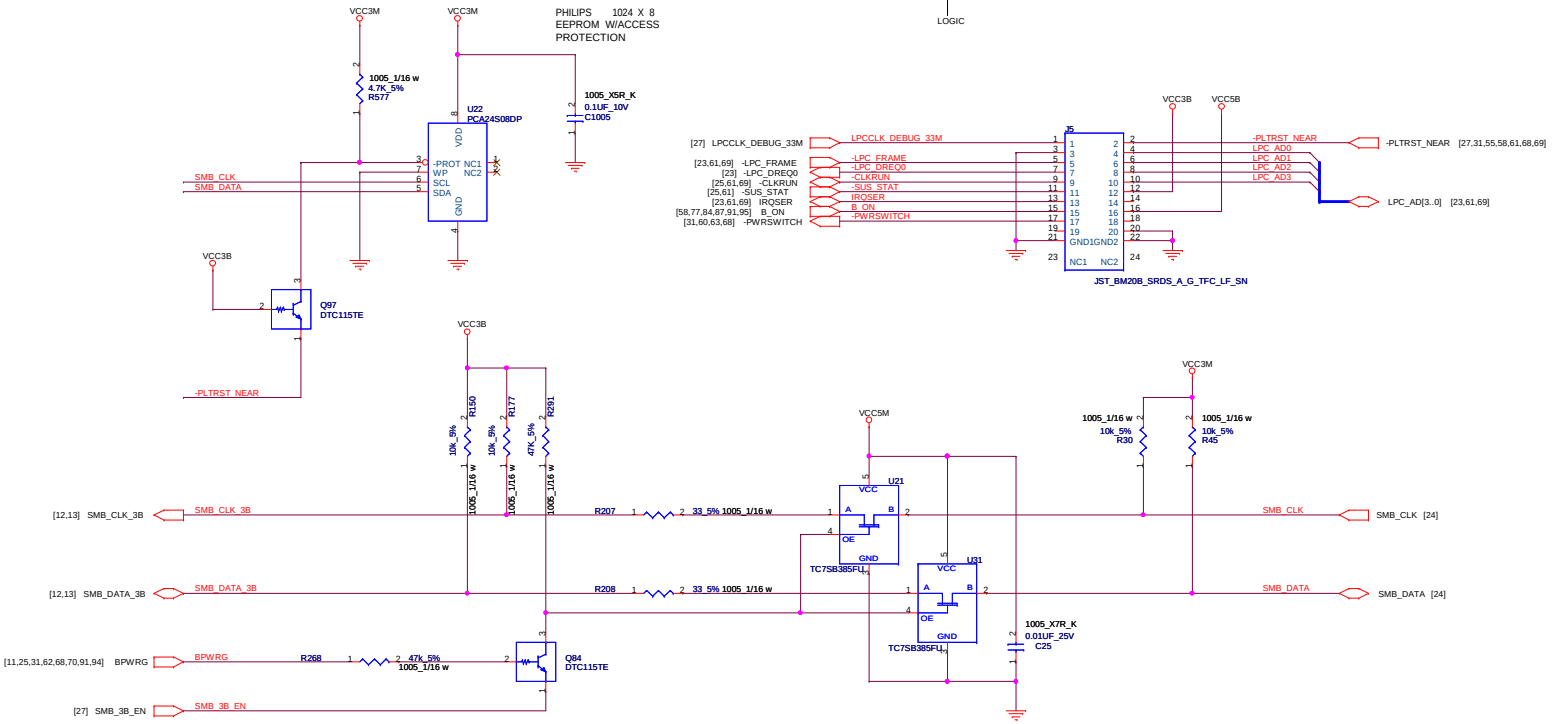

FLEXComputing

Project Name : NOZOMI-3 SWG SDV2	Title : EEPROM/SMBUS SW
Size : C	Document Number :
Rev : 2.10	
Date: Monday, June 14, 2010	Sheet : 71 of 99

DCIN

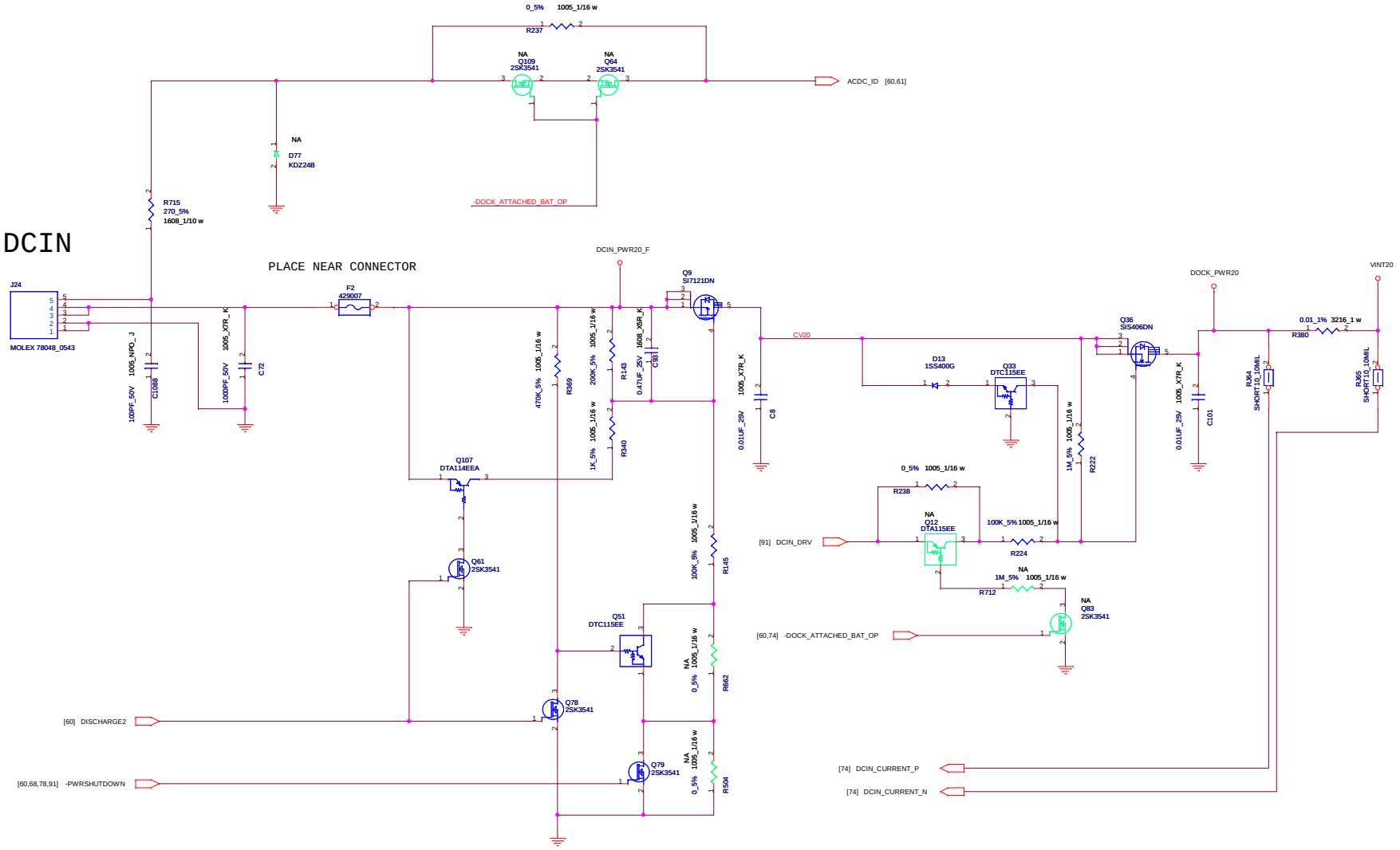

TABLE

PEAK SHIFT	YES	NO
R662	NO-ASM	ASM
R369	ASM	NO-ASM
Q78	ASM	NO-ASM
Q51	ASM	NO-ASM

LOGIC

FLEXComputing

Project Name : NOZOMI-3 SWG SDV2	Title : DC-IN	
Size : C	Document Number :	Rev : 2.10
Date: Monday, June 14, 2010	Sheet : 72 of 99	

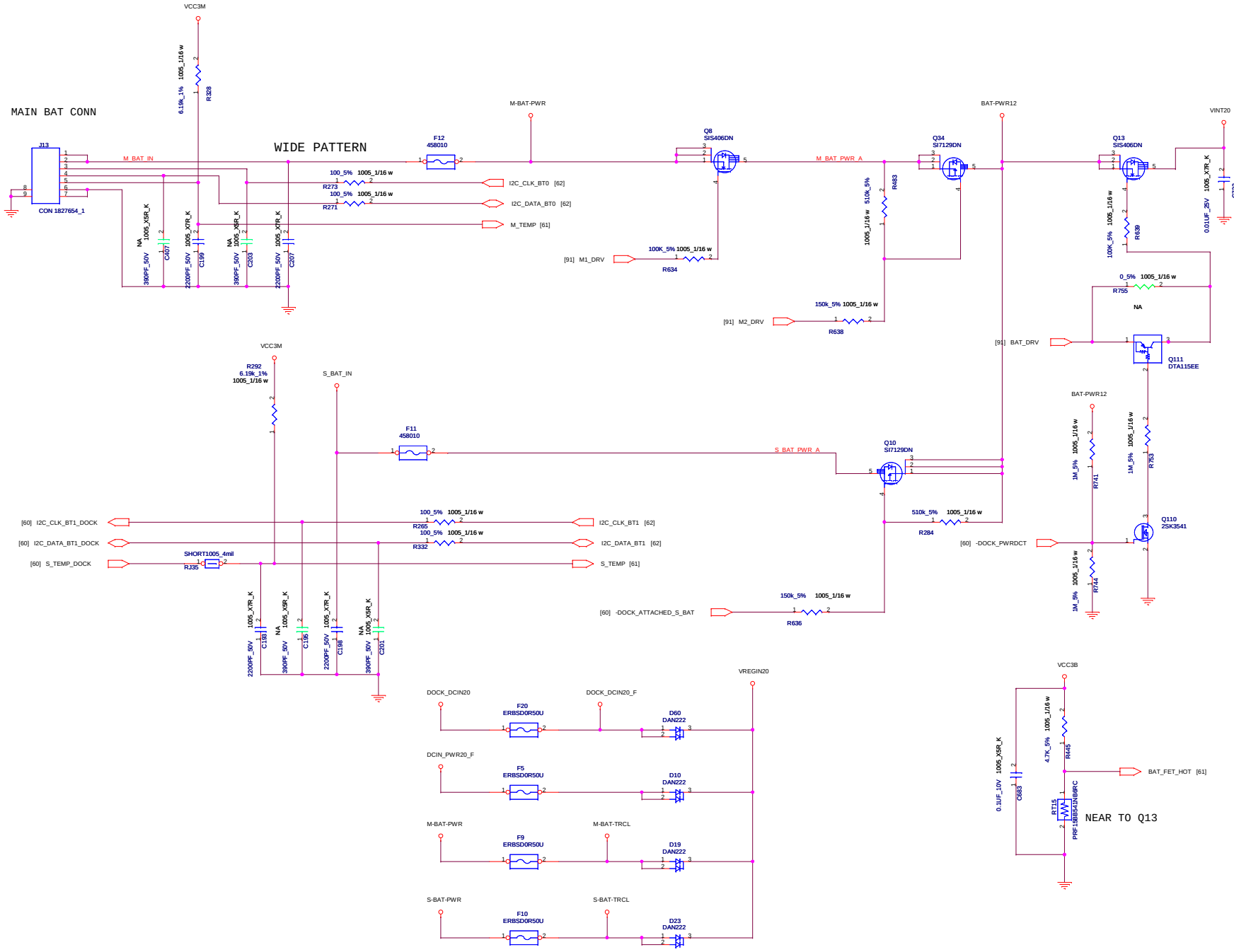

FLEXComputing

Project Name : NOZOMI-3 SWG SDV2	Title : BATTERY INPUT	
Size : C	Document Number :	Rev : 2.10
Date: Monday, June 14, 2010	Sheet : 73 of 99	

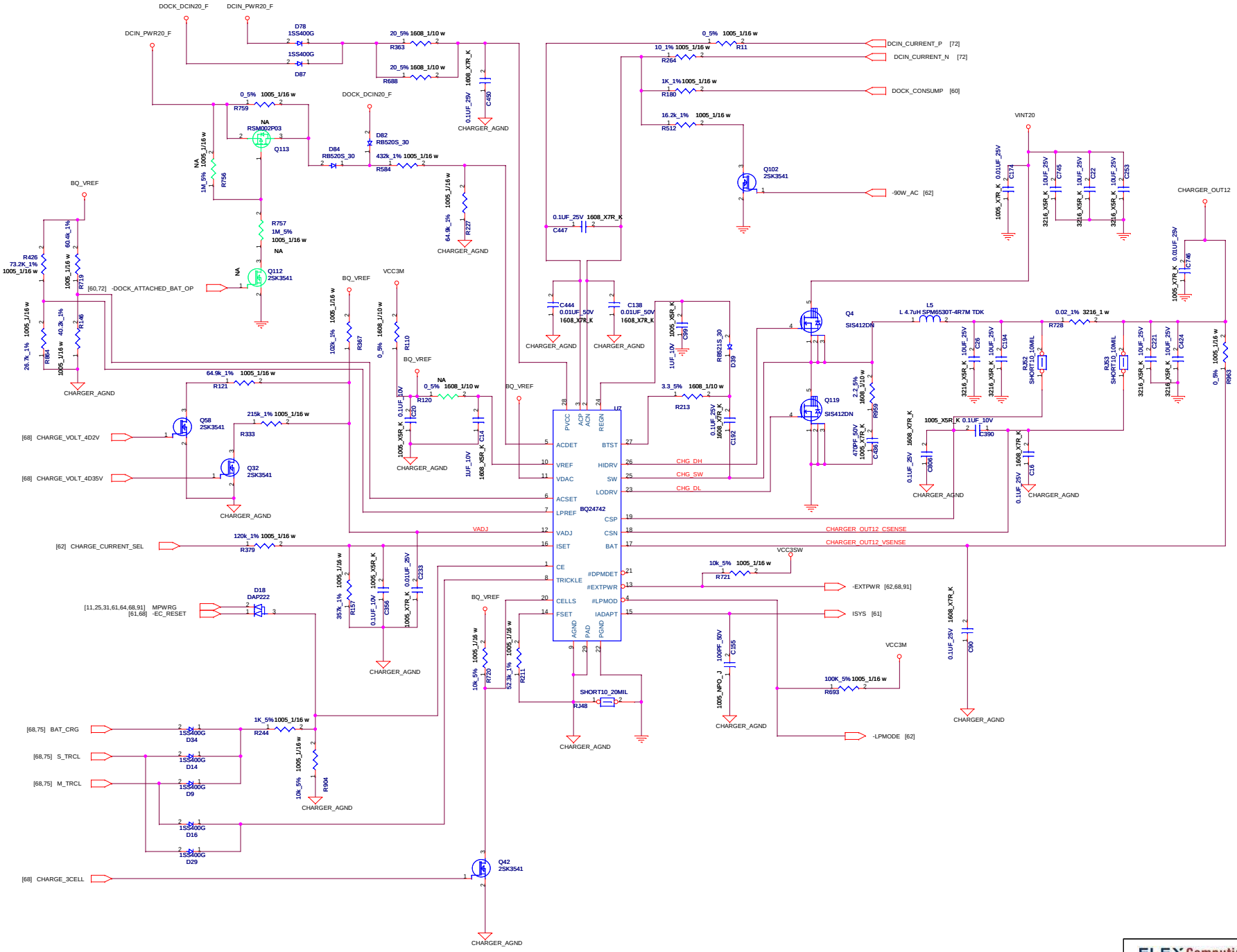

FLEX Computing

Project Name : NOZOMI-3 SWG SDV2	Title : BATTERY CHARGER	NZM3_SWG_SDV2_EC077
Size :	Document Number :	Rev : 2.10
Date: Monday, June 14, 2010	Sheet : 74 of 99	

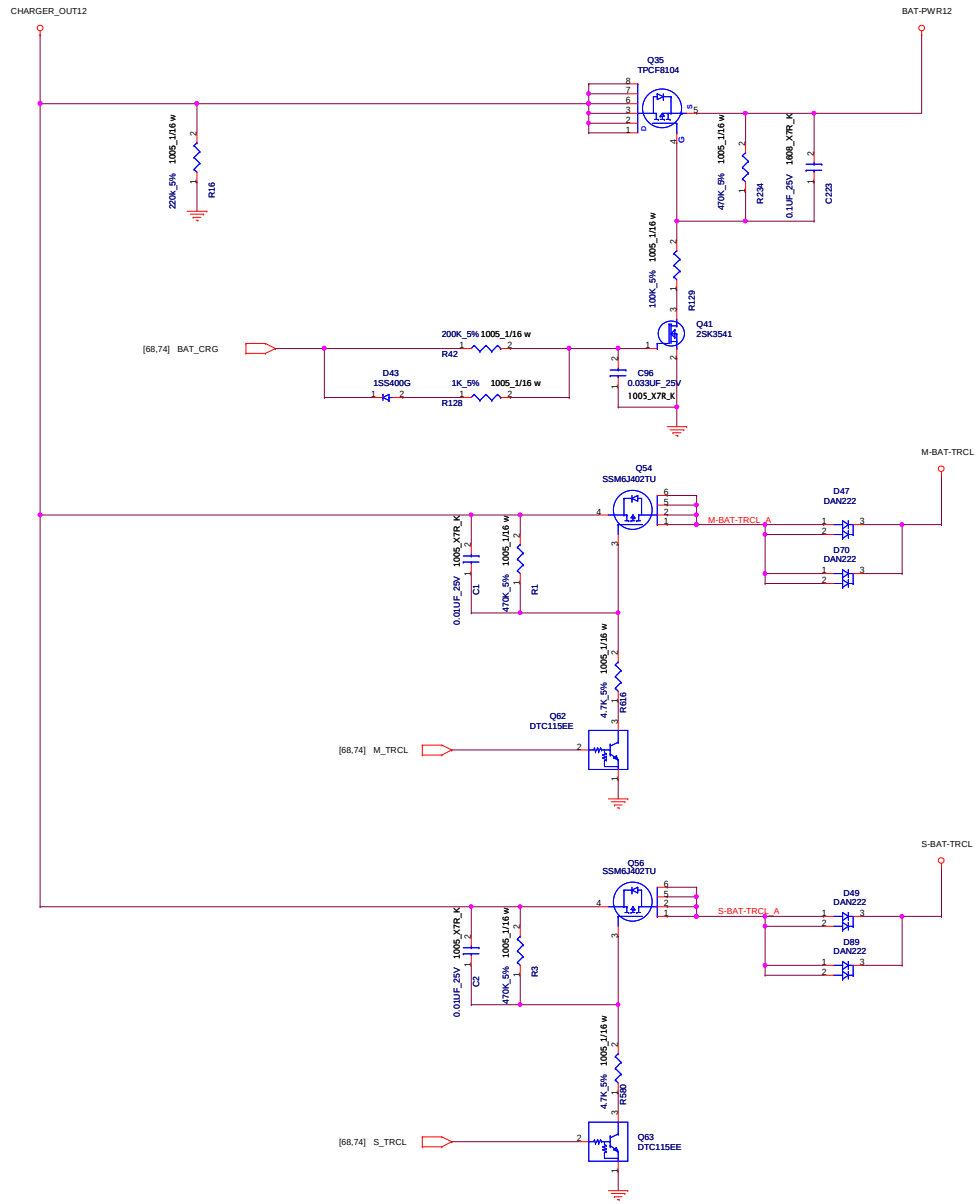

FLEXComputing

Project Name : NOZOMI-3 SWG SDV2	Title : CHARGE SELECTOR
Size : C	Document Number :
Date: Monday, June 14, 2010	Sheet : 75 of 99
	Rev : 2.10

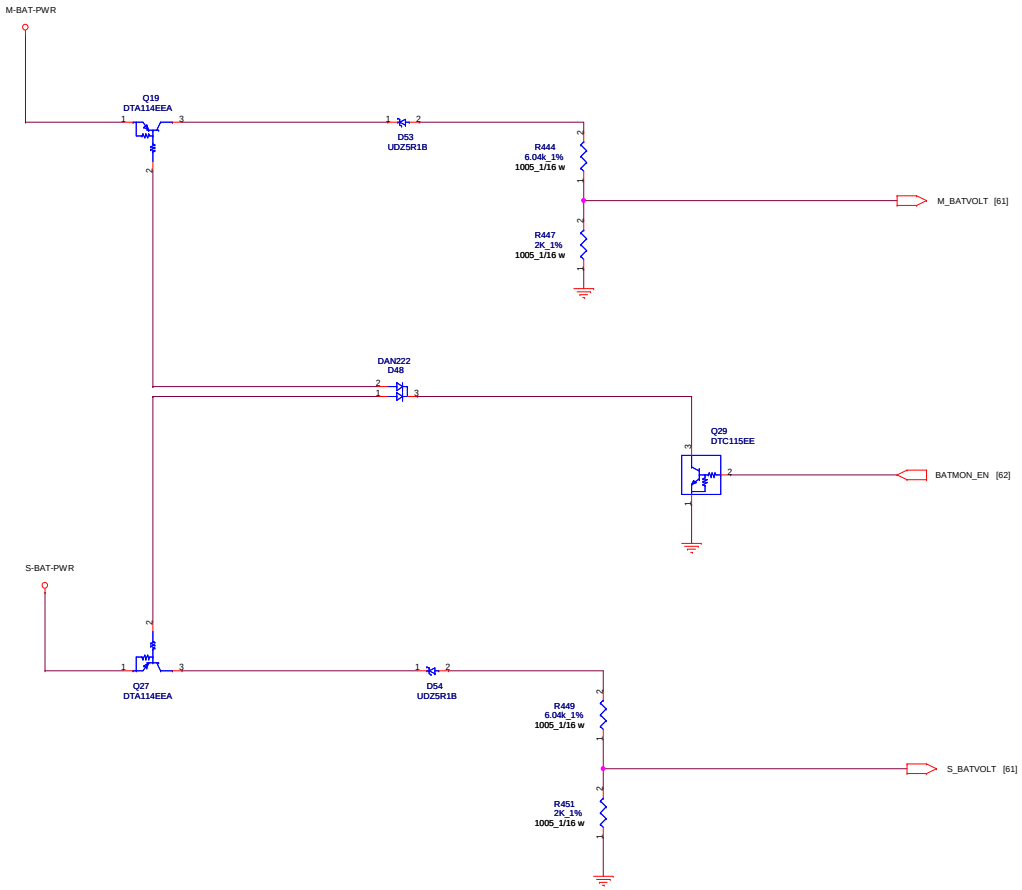

FLEX Computing

Project Name : NOZOMI-3 SWG SDV2	Title : BATTERY MONITOR	
Size : C	Document Number :	Rev : 2.10
Date: Monday, June 14, 2010	Sheet : 76 of 99	

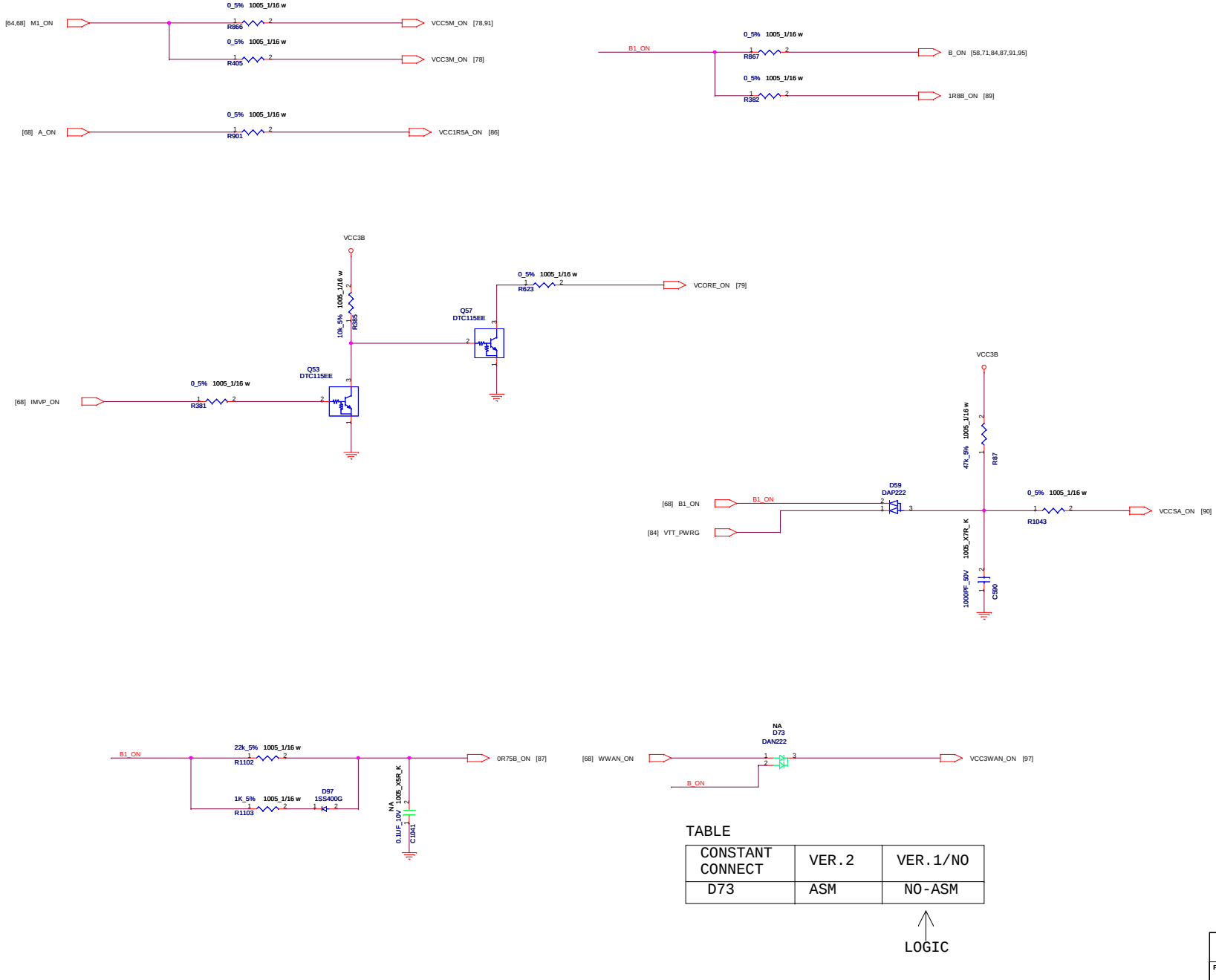

TABLE

CONSTANT CONNECT	VER.2	VER.1/NO
D73	ASM	NO-ASM

LOGIC

FLEXComputing

Project Name : NOZOMI-3 SWG SDV2	Title : POWER SEQUENCE	
Size : C	Document Number :	Rev : 2.10
Date: Monday, June 14, 2010	Sheet : 77 of 99	

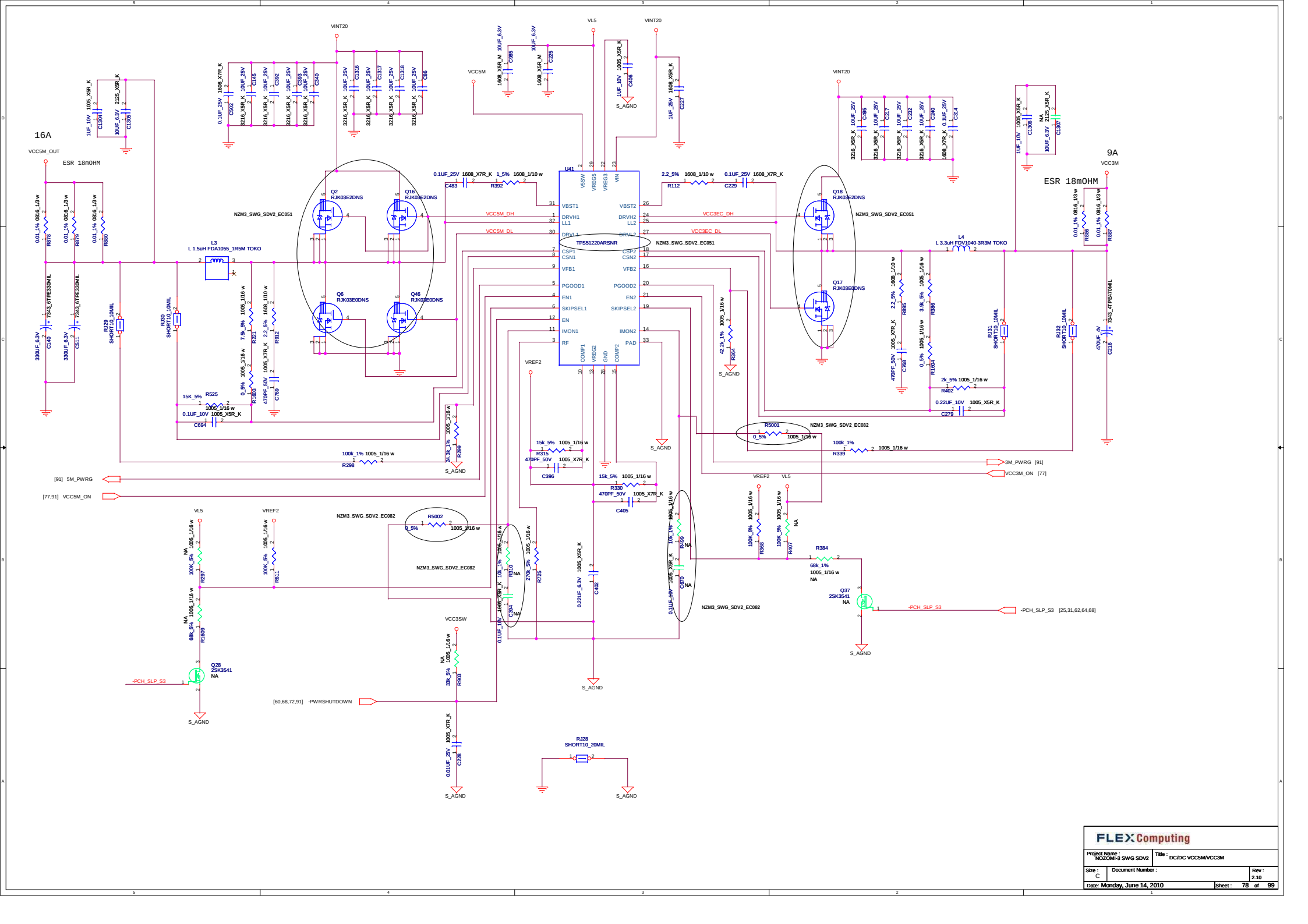
16A
VCC5M_OUT
ESR 18mOHM
9A
VCC3M
ESR 18mOHM
VINT20
VL5
VCC5M
VCC3SW
VREF2
S_AGND
U41
TPS51220ARSNR
NZM3_SWG_SDV2_EC051
NZM3_SWG_SDV2_EC082
Q2 RJK03E2DNS
Q16 RJK03E2DNS
Q5 RJK03E0DNS
Q46 RJK03E0DNS
Q18 RJK03E2DNS
Q17 RJK03E0DNS
L3 L 1.5uH FDA1055_1R5M TOKO
L4 L 3.3uH FDV1040-3R3M TOKO
VCC5M_DH
VCC5M_DL
VCC3EC_DH
VCC3EC_DL
[91] 5M_PWRG
[77,91] VCC5M_ON
3M_PWRG [91]
VCC3M_ON [77]
[60,68,72,91] -PWRSHUTDOWN
-PCH_SLP_S3
-PCH_SLP_S3 [25,31,62,64,68]
Q28 2SK3541 NA
Q37 2SK3541 NA
FLEX Computing
Project Name : NOZOMI-3 SWG SDV2
Title : DC/DC VCC5M/VCC3M
Size : C
Document Number :
Rev : 2.10
Date: Monday, June 14, 2010
Sheet : 78 of 99

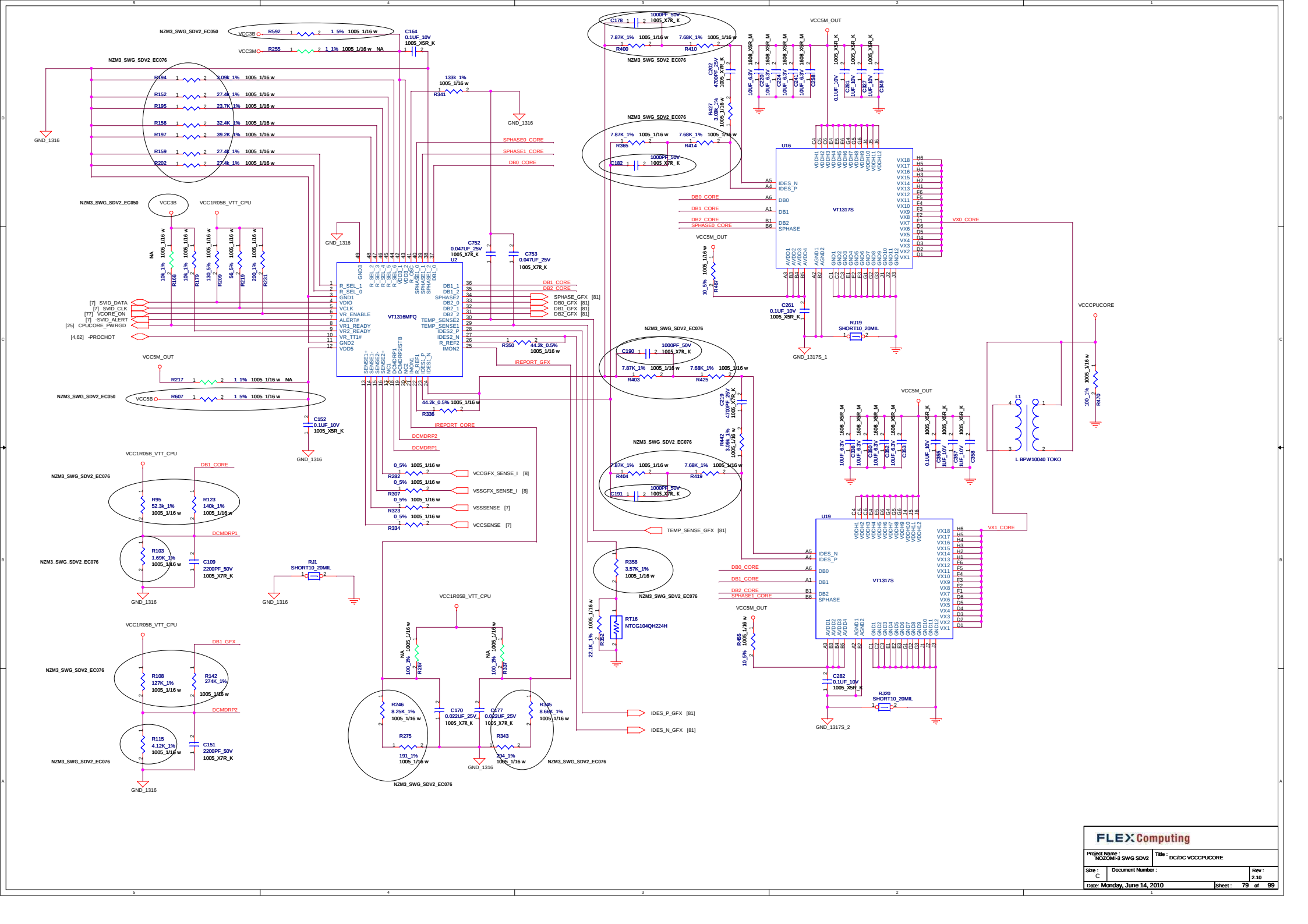

FLEX Computing

Project Name : NOZOMI-3 SWG SDV2	Title : DC/DC VCCCPUCORE	
Size : C	Document Number :	Rev : 2.10
Date: Monday, June 14, 2010	Sheet : 79 of 99	

FLEX Computing

Project Name : NOZOMI-3 SWG SDV2	Title : BLANK
Size : C	Document Number :
Date: Monday, June 14, 2010	Sheet : 80 of 99
	Rev : 2.10

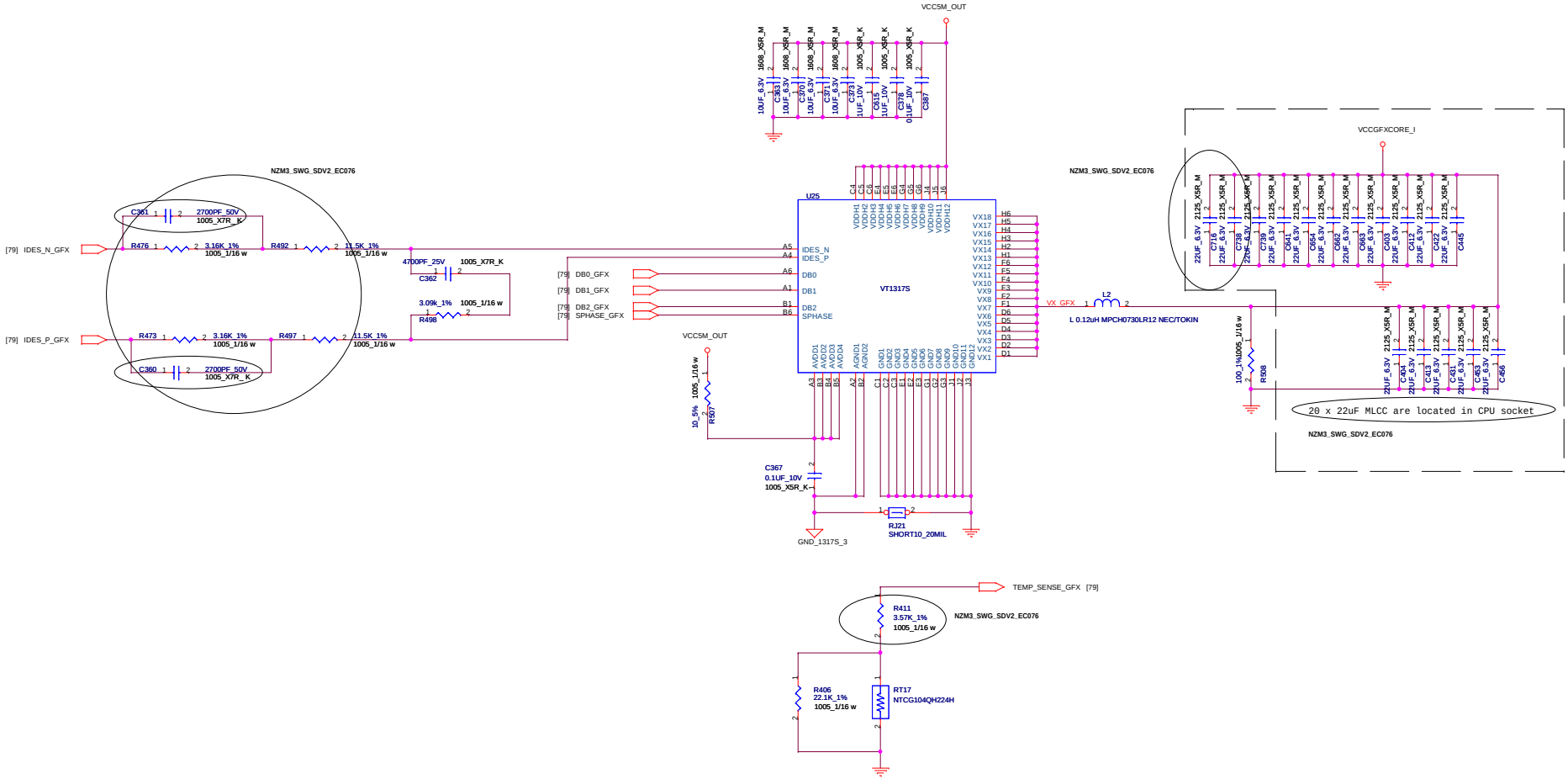

FLEX Computing			
Project Name : NOZOMI-3 SWG SDV2	Title : DC/DC VCCGFXCORE_I		
Size : C	Document Number :		Rev : 2.10
Date: Monday, June 14, 2010		Sheet : 81 of 99	

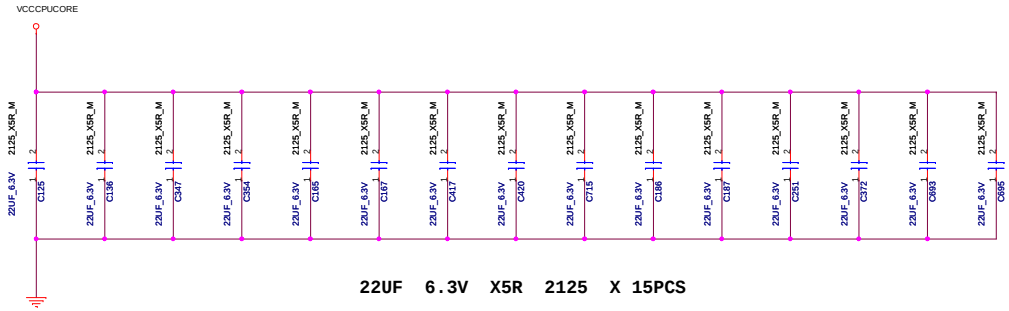

22UF 6.3V X5R 2125 X 15PCS

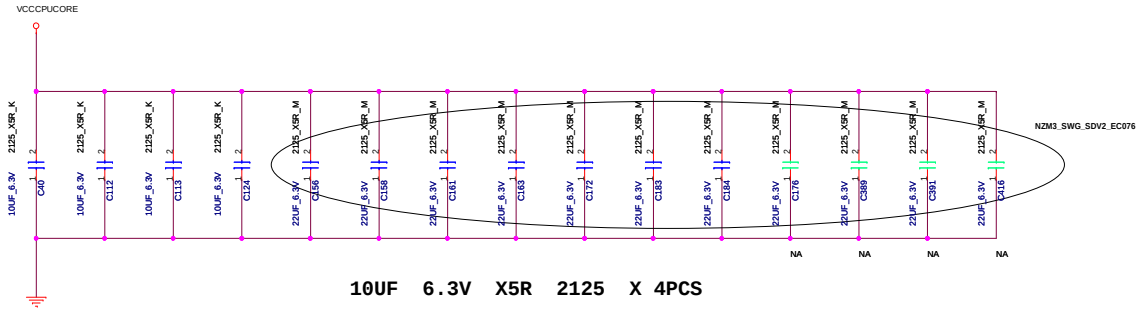

10UF 6.3V X5R 2125 X 4PCS

FLEXComputing	NZM3_SWG_SDV2_EC077	
Project Name : NOZOMI-3 SWG SDV2	Title : VCCCPUCORE DECOUPLING	
Size : C	Document Number :	Rev : 2.10
Date: Monday, June 14, 2010	Sheet : 82 of 99	

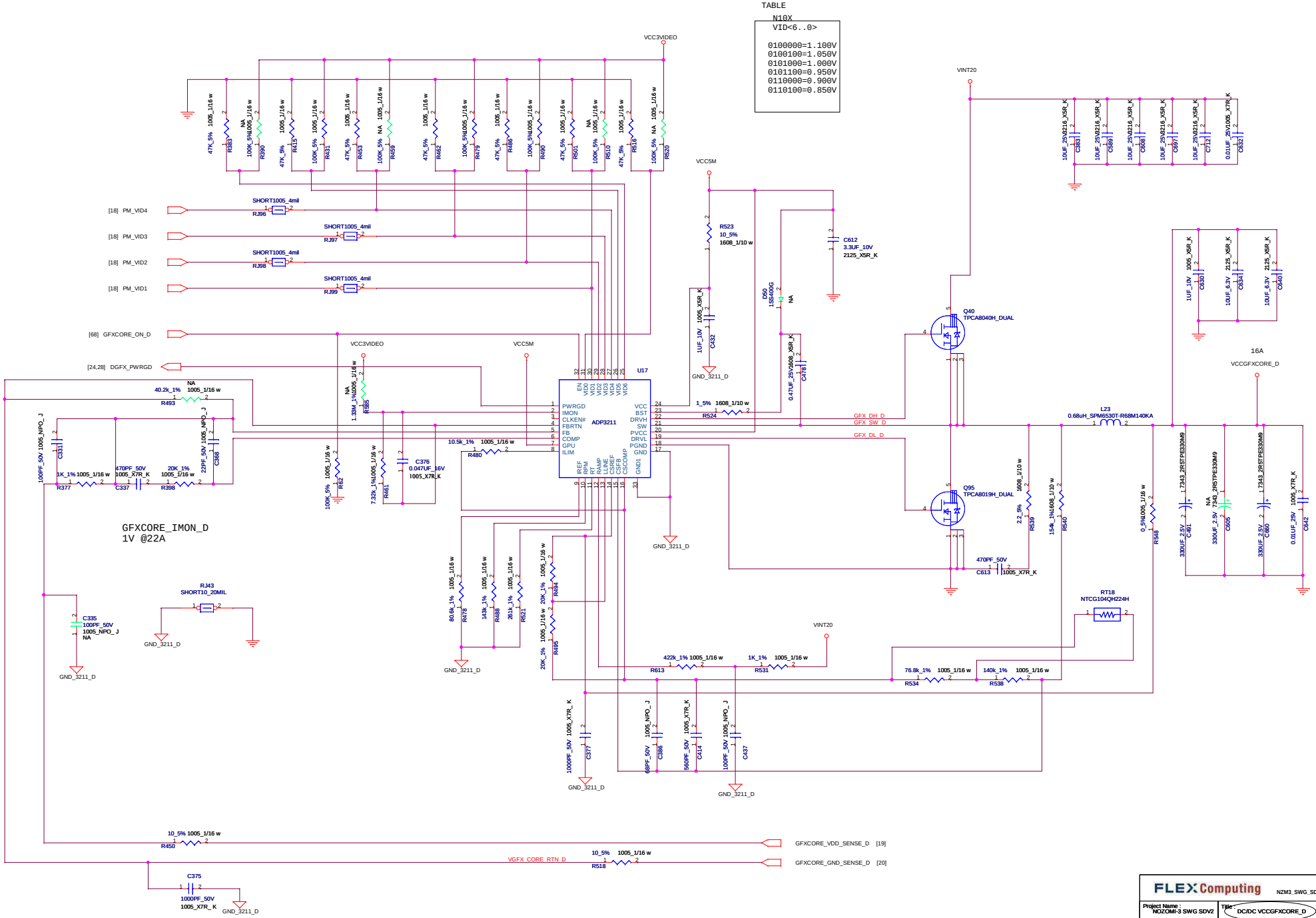
TABLE
N10X
VID<6..0>
0100000=1.100V
0100100=1.050V
0101000=1.000V
0101100=0.950V
0110000=0.900V
0110100=0.850V
GFXCORE_IMON_D
1V @22A
16A
ADP3211
U17
Q40 TPCA8040H_DUAL
Q95 TPCA8019H_DUAL
L23 0.68uH_SPM6530T-R68M140KA
RT18 NTCG104QH224H
[18] PM_VID4
[18] PM_VID3
[18] PM_VID2
[18] PM_VID1
[68] GFXCORE_ON_D
[24,28] DGFX_PWRGD
GFX_DH_D
GFX_SW_D
GFX_DL_D
VGFX_CORE_RTN_D
GFXCORE_VDD_SENSE_D [19]
GFXCORE_GND_SENSE_D [20]
VCC3VIDEO
VCC5M
VINT20
VCCGFXCORE_D
GND_3211_D
FLEX Computing
NZM3_SWG_SDV2_EC077
Project Name : NOZOMI-3 SWG SDV2
Title : DC/DC VCCGFXCORE_D
Size : C
Document Number :
Rev : 2.10
Date: Monday, June 14, 2010
Sheet : 83 of 99

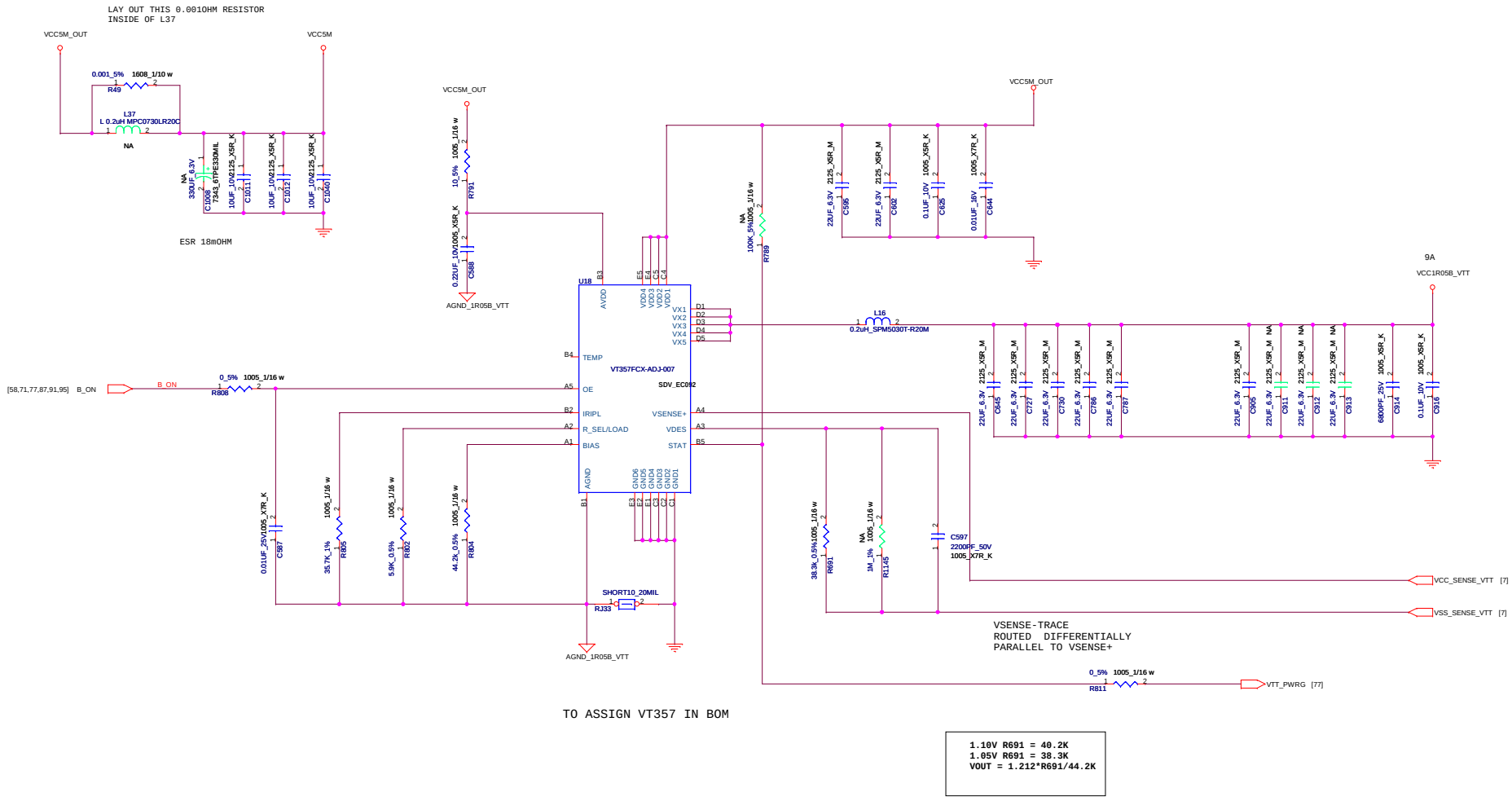

FLEXComputing

NZM3_SWG_SDV2_EC077

Project Name : NOZOMI-3 SWG SDV2

Title : DC/DC VCC1R05B_VTT

Size : C

Document Number :

Rev : 2.10

Date: Monday, June 14, 2010

Sheet : 84 of 99

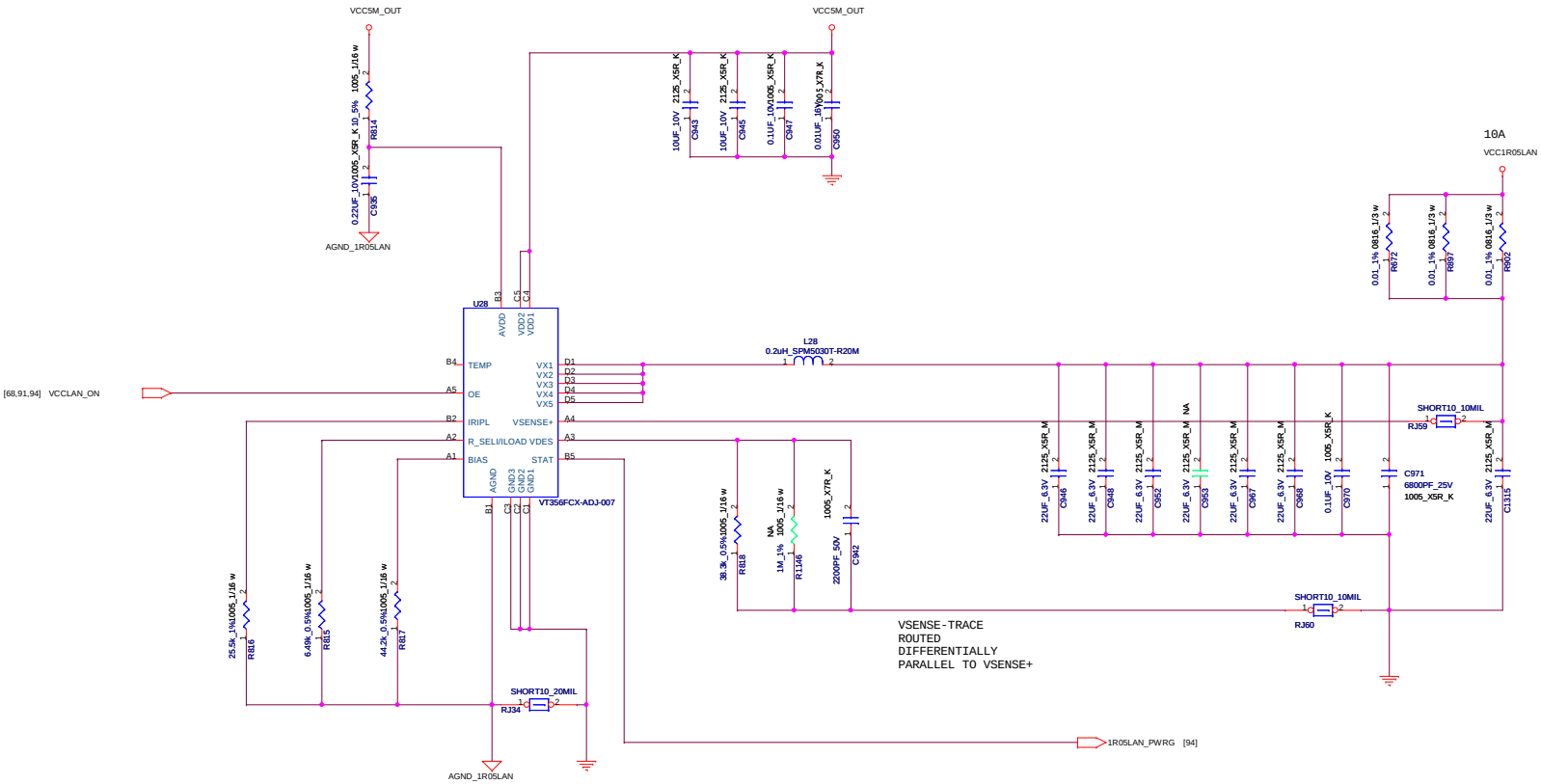

FLEX Computing	NZM3_SWG_SDV2_EC077		
Project Name : NOZOMI-3 SWG SDV2	Title : DC/DC VCC1R05LAN		
Size : C	Document Number :	Rev : 2.10	
Date: Monday, June 14, 2010	Sheet : 85 of 99		

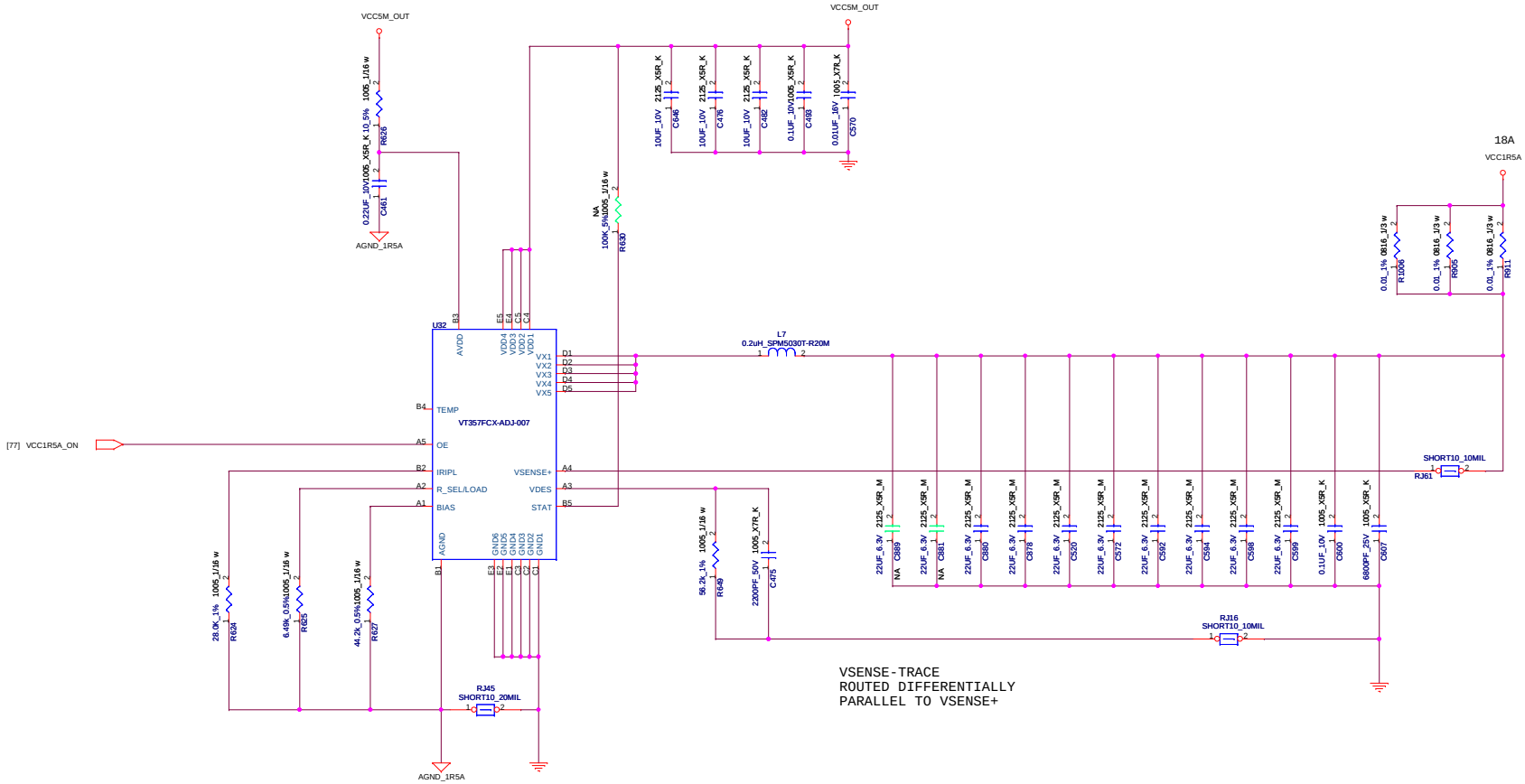

FLEXComputing NZM3_SWG_SDV2_EC077

Project Name : NOZOMI-3 SWG SDV2	Title : DC/DC VCC1R5A
Size : C	Document Number :
Rev : 2.10	
Date: Monday, June 14, 2010	Sheet : 86 of 99

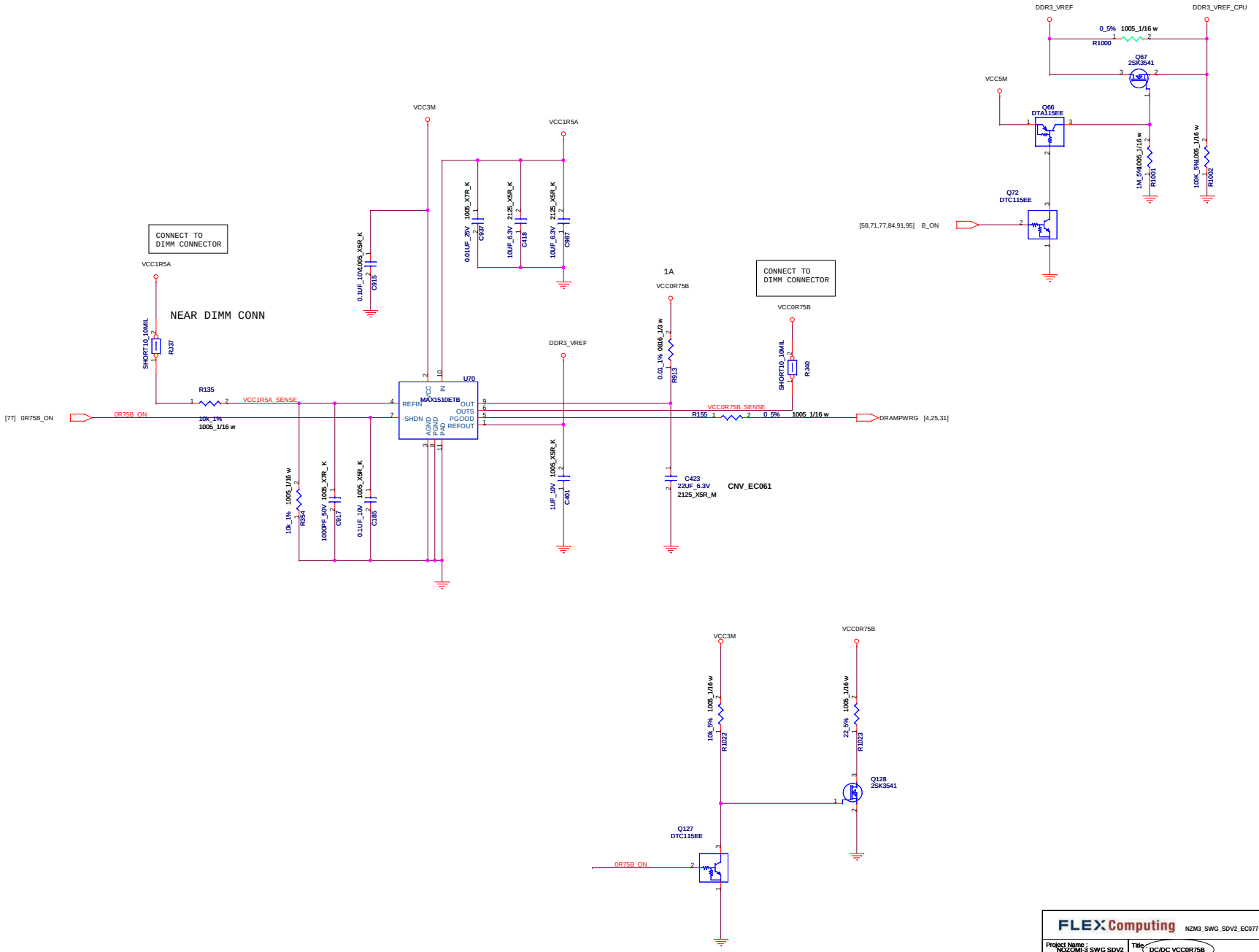

FLEXComputing	NZM3_SWG_SDV2_EC077	
Project Name : NOZOMI-3 SWG SDV2	Title : DC/DC VCC0R75B	
Size : C	Document Number :	Rev : 2.10
Date: Monday, June 14, 2010	Sheet : 87 of 99	

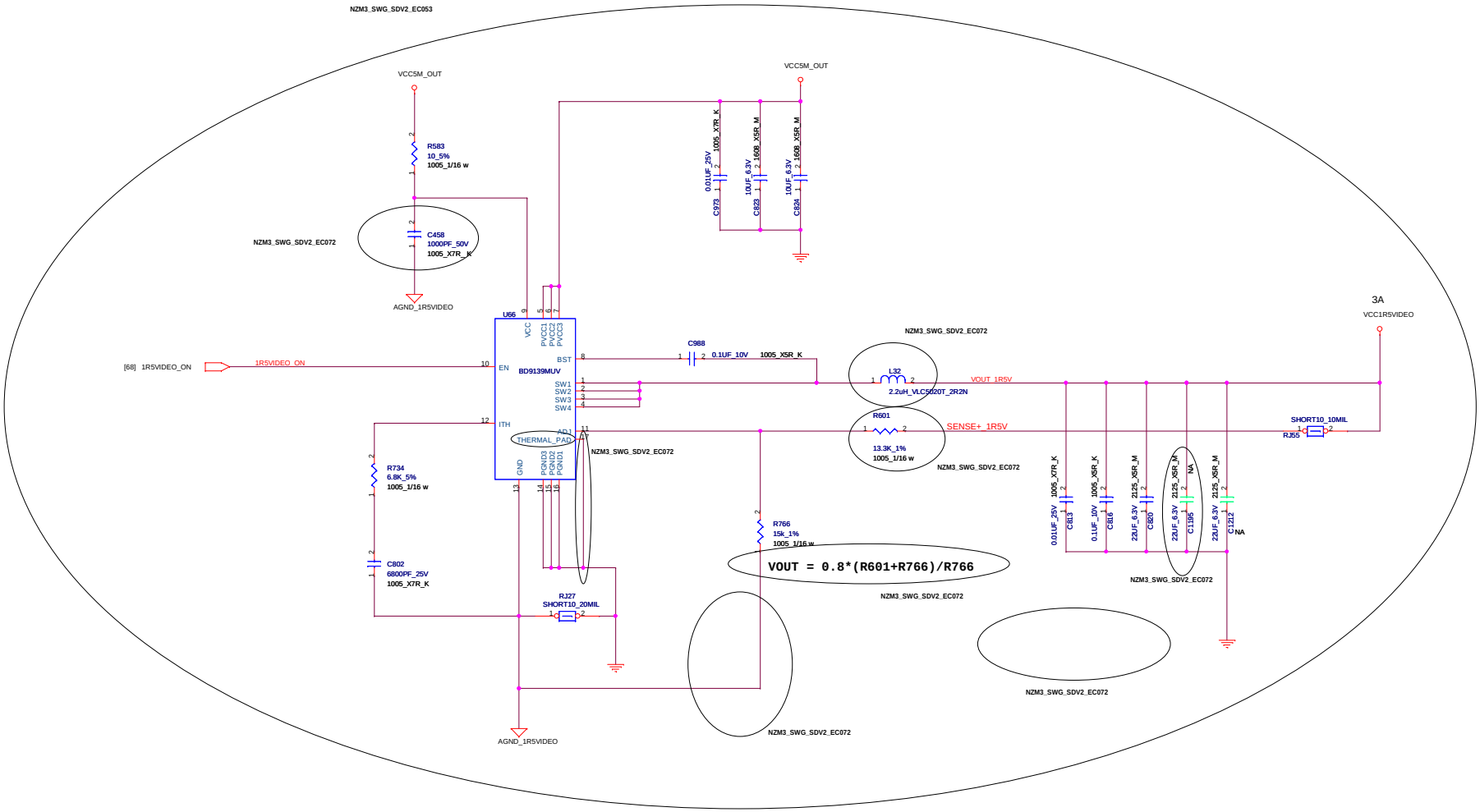

FLEX Computing NZM3_SWG_SDV2_EC077

Project Name : NOZOMI-3 SWG SDV2	Title : DC/DC VCC1R5VIDEO
Size : C	Document Number :
Rev : 2.10	
Date: Monday, June 14, 2010	Sheet : 88 of 99

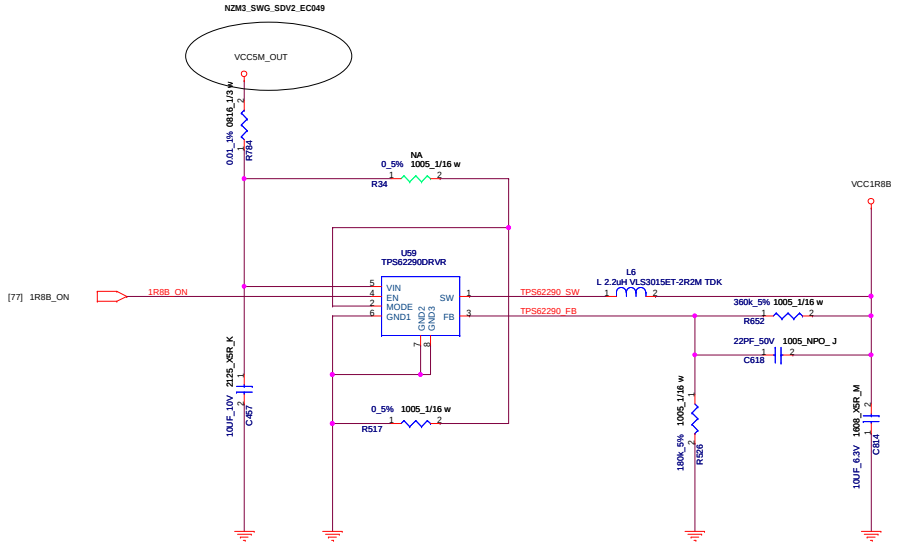

FLEXComputing	NZM3_SWG_SDV2_EC077	
Project Name : NOZOMI-3 SWG SDV2	Title : DC/DC VCC1R8B	
Size : C	Document Number :	Rev : 2.10
Date: Monday, June 14, 2010	Sheet : 89 of 99	

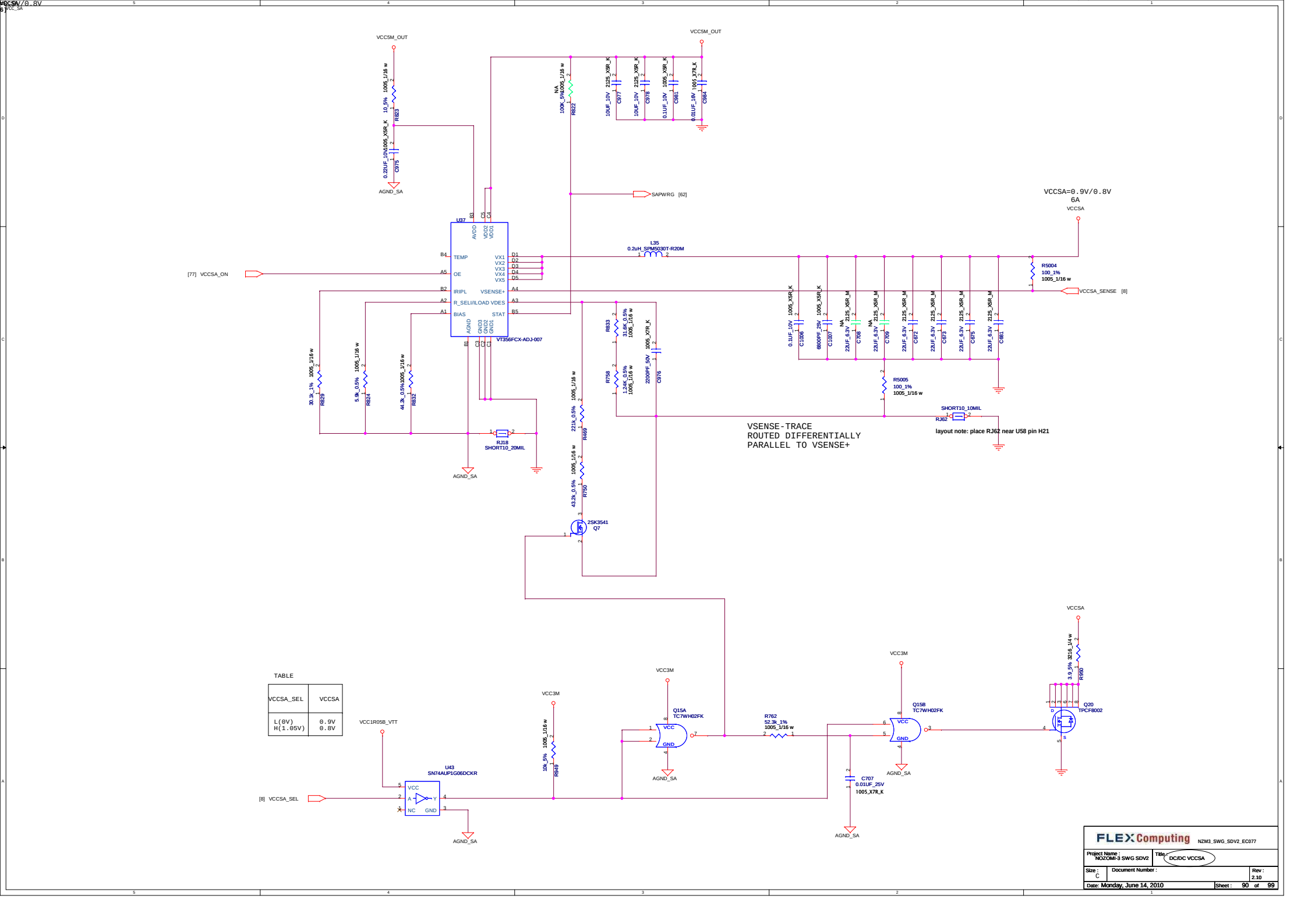
VCCSA=0.9V/0.8V
6A
VCCSA
VCC5M_OUT
SAPWRG [62]
[77] VCCSA_ON
U37
VT356FCX-ADJ-007
L35
0.2uH_SPM5030T-R20M
R5004
100_1%
1005_1/16 w
VCCSA_SENSE [8]
R5005
100_1%
1005_1/16 w
SHORT10_10MIL
RJ62
layout note: place RJ62 near U58 pin H21
RJ18
SHORT10_20MIL
VSENSE-TRACE
ROUTED DIFFERENTIALLY
PARALLEL TO VSENSE+
2SK3541
Q7
AGND_SA
TABLE
VCCSA_SEL
VCCSA
L(0V)
H(1.05V)
0.9V
0.8V
VCC1R05B_VTT
U43
SN74AUP1G06DCKR
[8] VCCSA_SEL
VCC3M
Q15A
TC7WH02FK
Q15B
TC7WH02FK
R762
52.3k_1%
1005_1/16 w
C707
0.01UF_25V
1005_X7R_K
Q20
TPCF8002
R950
3216_1/4 w
FLEX Computing
NZM3_SWG_SDV2_EC077
Project Name : NOZOMI-3 SWG SDV2
Title : DC/DC VCCSA
Size : C
Document Number :
Rev : 2.10
Date: Monday, June 14, 2010
Sheet : 90 of 99

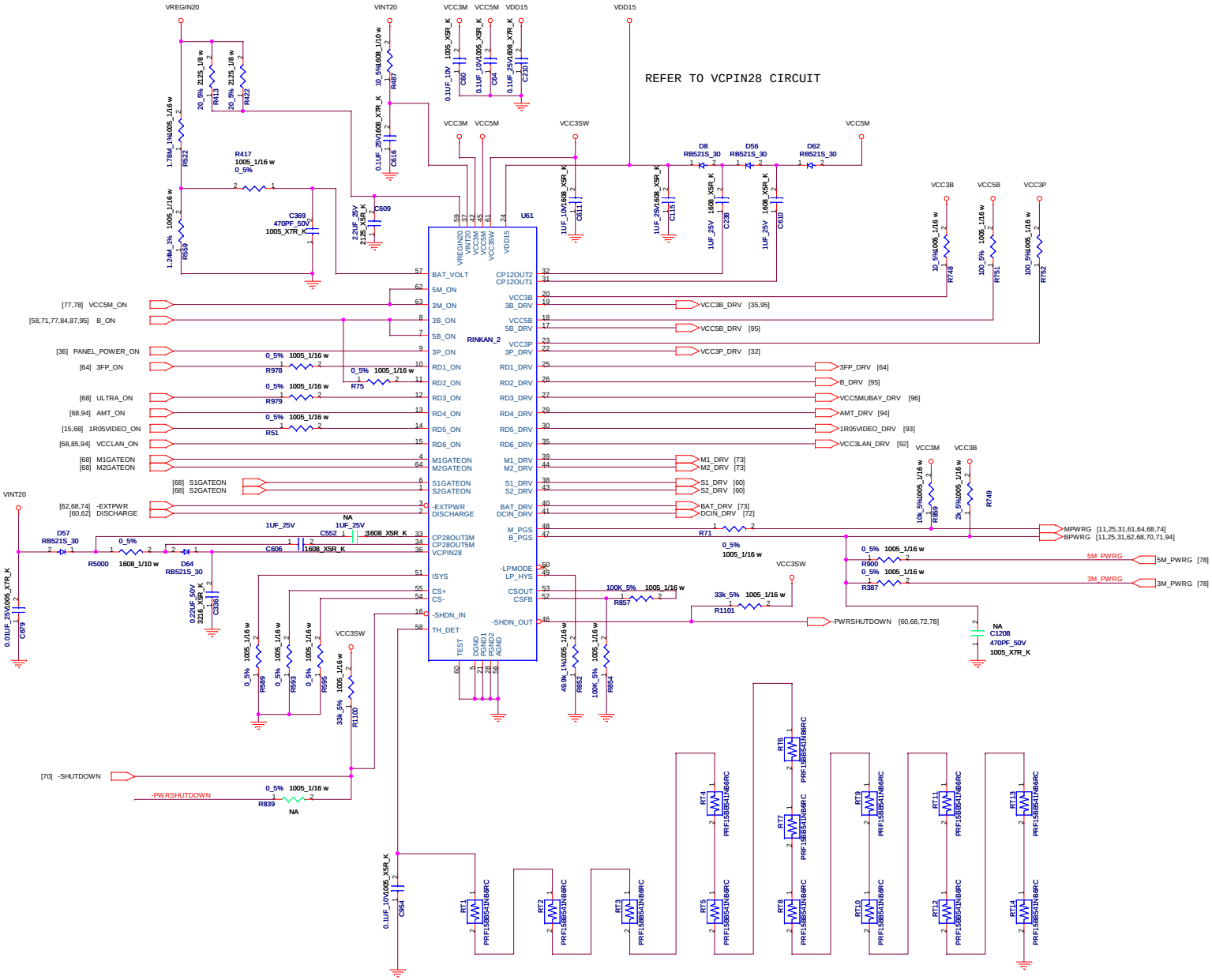

FLEX Computing NZM3_SWG_SDV2_EC077

Project Name : NOZOMI-3 SWG SDV2	Title : DC/DC RINKAN-2
Size : C	Document Number :
Date: Monday, June 14, 2010	Sheet : 91 of 99

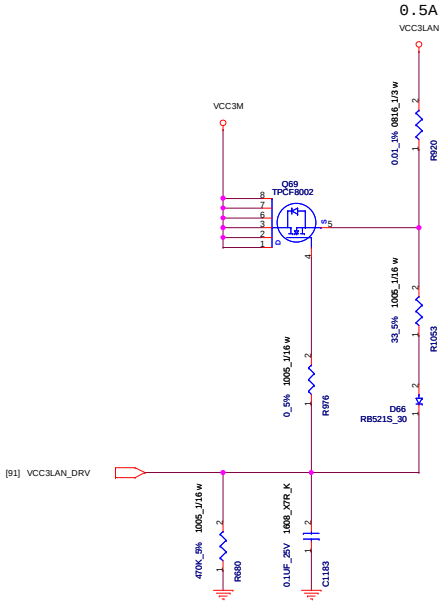

FLEX Computing

Project Name : NOZOMI-3 SWG SDV2	Title : LOAD SW LAN
Size : C	Document Number :
Rev : 2.10	
Date: Monday, June 14, 2010	Sheet : 92 of 99

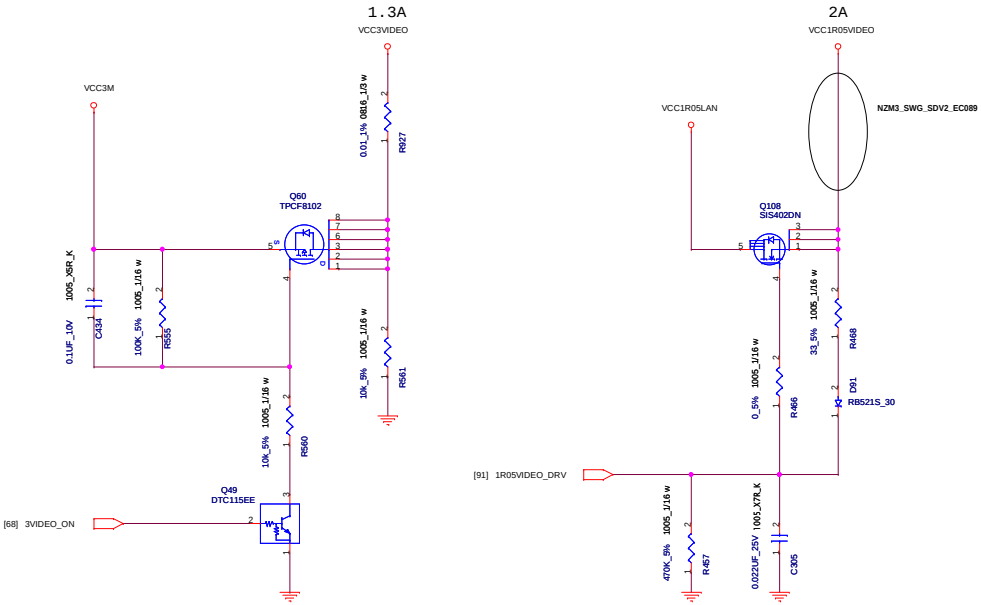

FLEXComputing

Project Name : NOZOMI-3 SWG SDV2	Title : LOAD SW VIDEO	
Size : C	Document Number :	Rev : 2.10
Date: Monday, June 14, 2010	Sheet : 93 of 99	

TABLE

AMT	YES	NO
Q96	ASM	NO-ASM
R597	ASM	NO-ASM
R640	ASM	NO-ASM
D20	ASM	NO-ASM
R547	ASM	NO-ASM
C89	ASM	NO-ASM
R641	NO_ASM	ASM

LOGIC

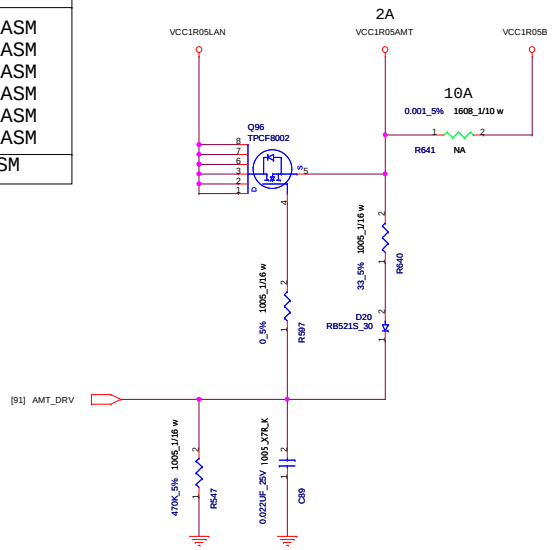

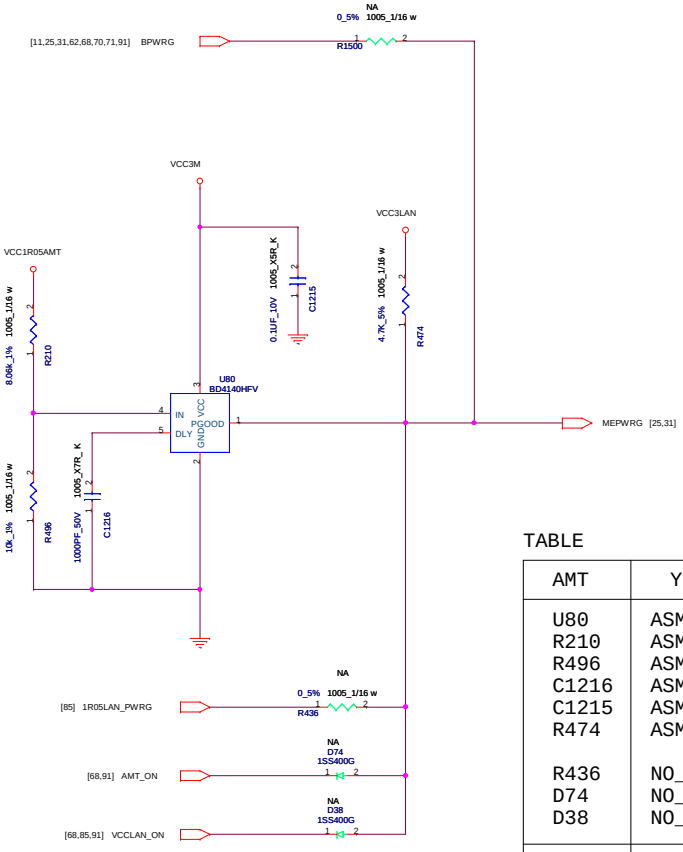

TABLE

AMT	YES	NO
U80	ASM	NO-ASM
R210	ASM	NO-ASM
R496	ASM	NO-ASM
C1216	ASM	NO-ASM
C1215	ASM	NO-ASM
R474	ASM	NO-ASM
R436	NO_ASM	NO_ASM
D74	NO_ASM	NO_ASM
D38	NO_ASM	NO_ASM
R1500	NO_ASM	ASM

LOGIC

FLEXComputing

Project Name : NOZOMI-3 SWG SDV2	Title : LOAD SW AMT/MEPWRG
Size : C	Document Number :
Rev : 2.10	
Date: Monday, June 14, 2010	Sheet : 94 of 99

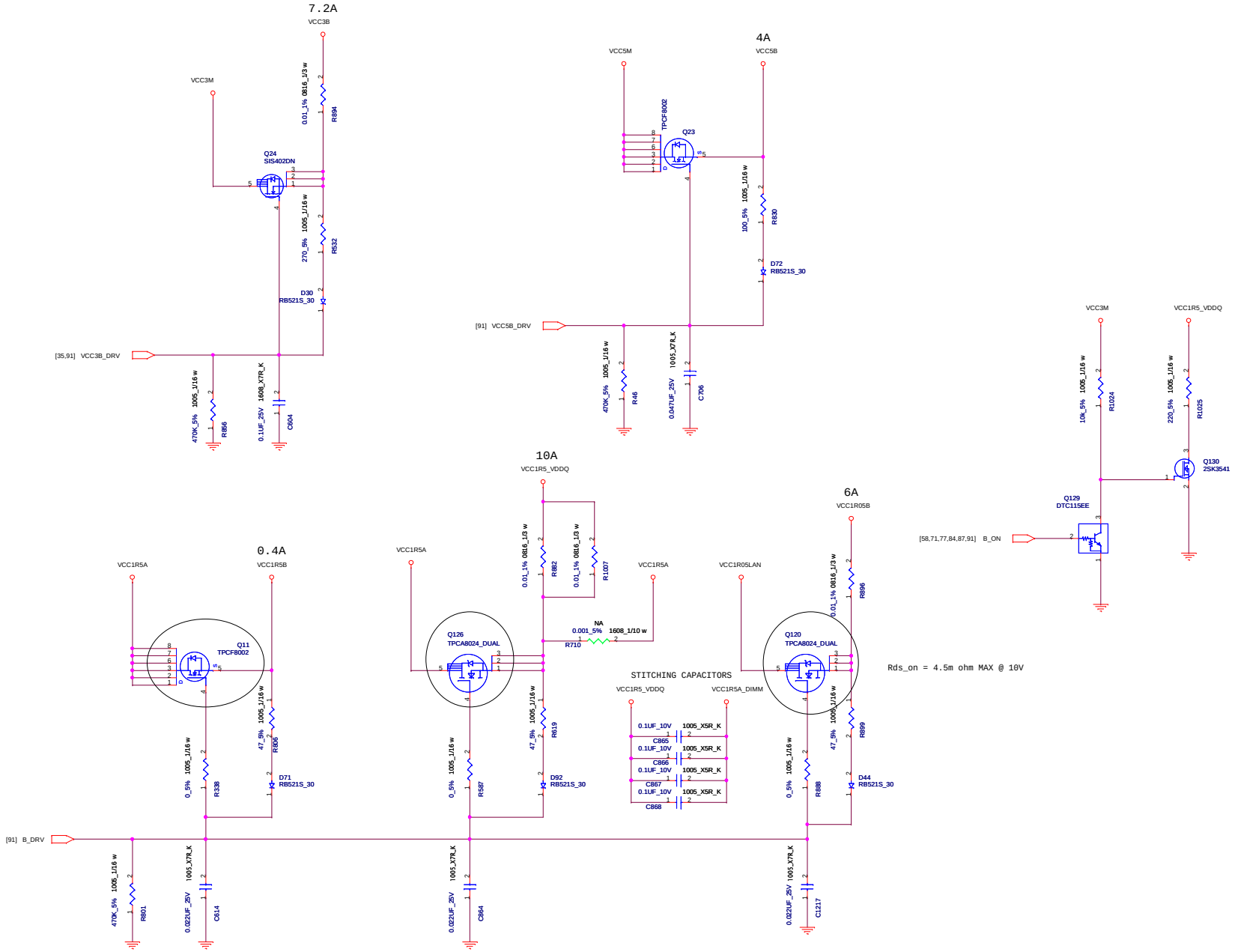

FLEX Computing

Project Name : NOZOMI-3 SWG SDV2	Title : LOAD SW B	
Size : C	Document Number :	Rev : 2.10
Date: Monday, June 14, 2010	Sheet : 95 of 99	

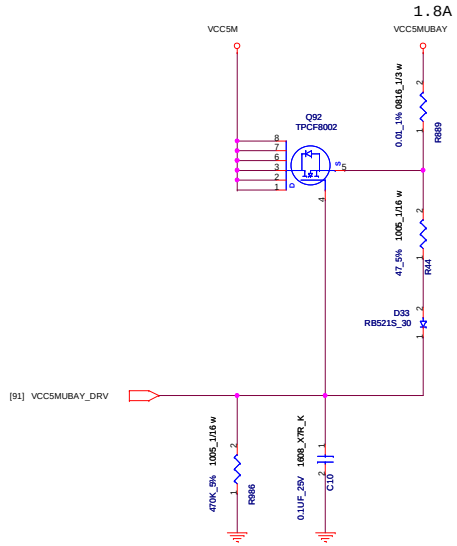

FLEX Computing

Project Name : NOZOMI-3 SWG SDV2	Title : LOAD SW VCC5MUBAY
Size : C	Document Number :
Rev : 2.10	
Date: Monday, June 14, 2010	Sheet : 96 of 99

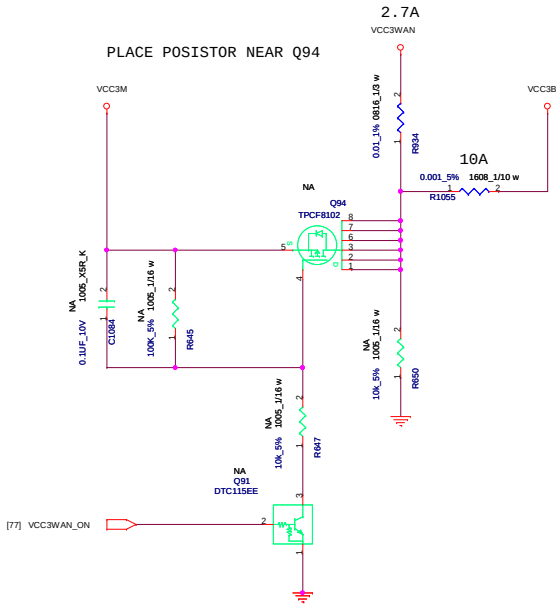

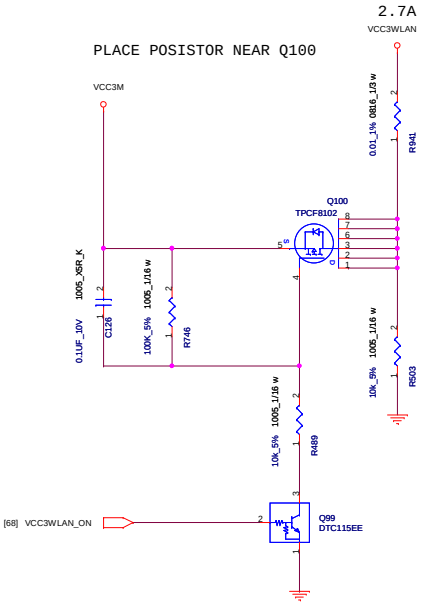

TABLE

CONSTANT CONNECT	VER.2	VER.1/NO
R1055	NO_ASM	ASM
Q94	ASM	NO-ASM
R650	ASM	NO-ASM
R645	ASM	NO-ASM
C1084	ASM	NO-ASM
R647	ASM	NO-ASM
Q91	ASM	NO-ASM

LOGIC

FLEXComputing

Project Name : NOZOMI-3 SWG SDV2	Title : LOAD SW WAN & WLAN	
Size : C	Document Number :	Rev : 2.10
Date: Monday, June 14, 2010	Sheet : 97 of 99	

PTH FOR SCREW HOLE

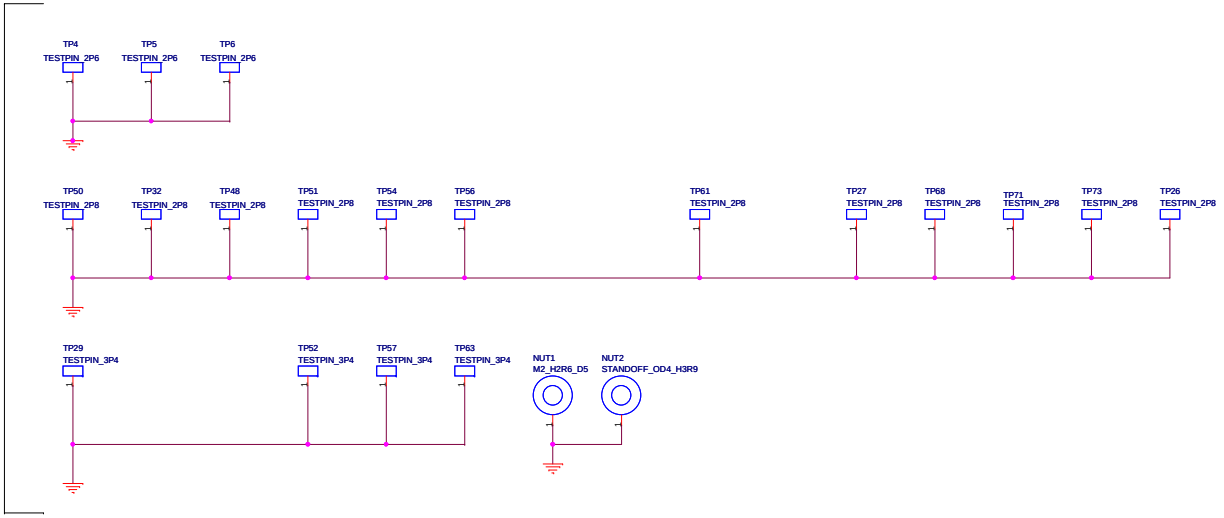

NPTH

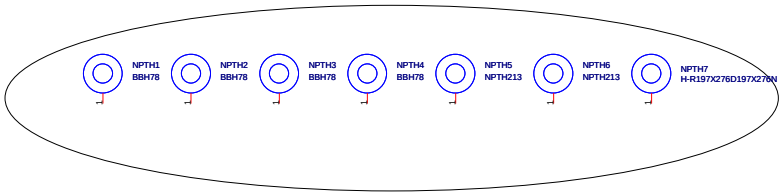

FID
Board Area

FD1 NC, NO CONNECT TO ANY.
FD2 NC, NO CONNECT TO ANY.
FD3 NC, NO CONNECT TO ANY.
FD4 NC, NO CONNECT TO ANY.
FD5 NC, NO CONNECT TO ANY.
FD6 NC, NO CONNECT TO ANY.

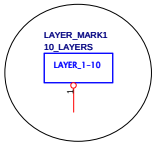

FID
Component Area

CF1 NC, NO CONNECT TO ANY.
CF2 NC, NO CONNECT TO ANY.
CF3 NC, NO CONNECT TO ANY.
CF4 NC, NO CONNECT TO ANY.
CF5 NC, NO CONNECT TO ANY.
CF6 NC, NO CONNECT TO ANY.
CF7 NC, NO CONNECT TO ANY.
CF8 NC, NO CONNECT TO ANY.
CF9 NC, NO CONNECT TO ANY.
CF10 NC, NO CONNECT TO ANY.
CF11 NC, NO CONNECT TO ANY.
CF12 NC, NO CONNECT TO ANY.
CF13 NC, NO CONNECT TO ANY.
CF14 NC, NO CONNECT TO ANY.
CF15 NC, NO CONNECT TO ANY.
CF16 NC, NO CONNECT TO ANY.
CF17 NC, NO CONNECT TO ANY.
CF18 NC, NO CONNECT TO ANY.

FLEX Computing NZM3_SWG_SDV2_EC077

Project Name : NOZOMI-3 SWG SDV2	Title : PTH FOR SCREW HOLES	
Size : C	Document Number :	Rev : 2.10
Date: Monday, June 14, 2010		Sheet : 98 of 99

FLEX Computing NZM3_SWG_SDV2_EC077

Project Name : NOZOMI-3 SWG SDV2	Title : BLANK	
Size : C	Document Number :	Rev : 2.10
Date: Monday, June 14, 2010	Sheet : 99 of 99	