PCB STACK UP

LAYER 1 : TOP
LAYER 2 : GND
LAYER 3 : IN1
LAYER 4 : GND
LAYER 5 : SVCC
LAYER 6 : IN2
LAYER 7 : GND
LAYER 8 : BOT

QUANTA CONFIDENTIAL
TO ICT FOR REVIEW

BLOCK DIAGRAM

Note :DP means Display Port Interface

FAN /THERMAL
EMC2103-2
Page32

Discharge Page37
Charge (BQ24737) Page38
DDR3/0.75V (TPS51216) Page40
3V/5V (TPS51123ARGER) Page39
+1.1V_DUAL & 1.1V (TPS511211) Page41
+1.2V_VDDPR/+2.5 Page42
VDD/+VDDNB_CORE (ISL6277HRTZ-T) Page43
DGPU (ISL6277HRTZ-T) Page44
1.8V Page45
GPU Page46

Note :DDR3 1.35V support 1066~1333 MHz
DDR3 1.5V support 1066~1600 MHz

DDR III
SO-DIMM 0
SO-DIMM 1
Memory size MAX is 16GB per channel
Page12, 13

Dual Channel
1333/1600 MHz

DDR SYSTEM MEMORY

AMD
Support 45W/ 35W TDP
Socket FS1r2-Trinity
APU (CPU + GPU)
uPGA 722 pin

DP0/TXPN[0:3] → DP0 → **ANX3111** Page25 → LVDS → **LVDS** Page26
DP to LVDS

DP2/TXPN[0:3] → DP2 → **HDMI** Page23

GPP PCIEX1 → PEGX16 → **Seymour XT** Page14~Page22

GPP PCIEX1 → Page02,03,04,05,06

UMI → DP1/TXPN[0:3]

RealTek
(10/100 and 1G LAN)
RTL8105E-VD-CG/
RTL8111F-CG
Page27

PCIEx1
GPP PCIE2
2.5GT/s
PCI-Express Gen1

X'TAL 25MHz

LVI → **Transformer** Page27 → **RJ45** Page27

PCIEx1
GPP PCIE3
PCI-Express Gen1
2.5GT/s

Mini Card
Wlan/WiFi
Page30

USB 2.0

X4 UMI interface
2.5GT/s

UMI → DP1

AMD
FCH
Hudson-M3
FCBGA 656 pin
Page07,08,09,10,11

DP to VGA → VGA → **VGA** Page24

SATA Gen3 → SATA0 6Gbit/s → **HDD (SATA)** Page29
SATA Gen3 → SATA1 6Gbit/s → **ODD (SATA)** Page29
SATA Gen2

USB3.0 → USB 3.0 → **USB3.0/USB2.0 COMBO** Page31
USB2.0 → USB 2.0

RTC → X'TAL 32.768KHz

PCI-E

USB2.0 → USB 2.0 → **USB 2.0 X2** Page31, 34
USB 2.0 → **Bluetooth** Page33
USB 2.0 → **CCD** Page33
USB 2.0 → **Card Reader** RTS5131-GR Page34
5-IN-1 SD/MMC/MS/XD

HDA → Azalia (HDA bus) → **Audio CODEC** ALC269Q-VC2-GR Page28
HP Jack
MIC Jack
SPK Page28
DMIC Page28

LPC → SPI → **SPI ROM** 8M Page09

LPC → **(IT8518 HX)** Page35
X'TAL 32.768KHz
SPI ROM Page35
Touch Pad Page34
Keyboard Page34

PROJECT : LZ2C
Quanta Computer Inc.
Size | Document Number: System Block Diagram | Rev: 2A
Date: Monday, January 09, 2012 | Sheet 1 of 51

(4,5,25,37,42,47) +1.2V_VDDPR

U2001F

PCI EXPRESS

GRAPHICS

GPP

UMI-LINK

(14) PEG_RXP0	PEG_RXP0	AB8	P_GFX_RXP0	P_GFX_TXP0	AB2	PEG_TXP0_C	C3346	DIS@0.1U/10V_4X			PEG_TXP0							PEG_TXP0 (14)
(14) PEG_RXN0	PEG_RXN0	AB7	P_GFX_RXN0	P_GFX_TXN0	AB1	PEG_TXN0_C			C3342	DIS@0.1U/10V_4X	PEG_TXN0							PEG_TXN0 (14)
(14) PEG_RXP1	PEG_RXP1	AA9	P_GFX_RXP1	P_GFX_TXP1	AA3	PEG_TXP1_C	C3333	DIS@0.1U/10V_4X			PEG_TXP1							PEG_TXP1 (14)
(14) PEG_RXN1	PEG_RXN1	AA8	P_GFX_RXN1	P_GFX_TXN1	AA2	PEG_TXN1_C			C3341	DIS@0.1U/10V_4X	PEG_TXN1							PEG_TXN1 (14)
(14) PEG_RXP2	PEG_RXP2	AA5	P_GFX_RXP2	P_GFX_TXP2	Y5	PEG_TXP2_C	C3336	DIS@0.1U/10V_4X			PEG_TXP2							PEG_TXP2 (14)
(14) PEG_RXN2	PEG_RXN2	AA6	P_GFX_RXN2	P_GFX_TXN2	Y4	PEG_TXN2_C			C3345	DIS@0.1U/10V_4X	PEG_TXN2							PEG_TXN2 (14)
(14) PEG_RXP3	PEG_RXP3	Y8	P_GFX_RXP3	P_GFX_TXP3	Y2	PEG_TXP3_C	C3338	DIS@0.1U/10V_4X			PEG_TXP3							PEG_TXP3 (14)
(14) PEG_RXN3	PEG_RXN3	Y7	P_GFX_RXN3	P_GFX_TXN3	Y1	PEG_TXN3_C			C3344	DIS@0.1U/10V_4X	PEG_TXN3							PEG_TXN3 (14)
(14) PEG_RXP4	PEG_RXP4	W9	P_GFX_RXP4	P_GFX_TXP4	W3	PEG_TXP4_C	C3337	DIS@0.1U/10V_4X			PEG_TXP4							PEG_TXP4 (14)
(14) PEG_RXN4	PEG_RXN4	W8	P_GFX_RXN4	P_GFX_TXN4	W2	PEG_TXN4_C			C3339	DIS@0.1U/10V_4X	PEG_TXN4							PEG_TXN4 (14)
(14) PEG_RXP5	PEG_RXP5	W5	P_GFX_RXP5	P_GFX_TXP5	V5	PEG_TXP5_C	C3324	DIS@0.1U/10V_4X			PEG_TXP5							PEG_TXP5 (14)
(14) PEG_RXN5	PEG_RXN5	W6	P_GFX_RXN5	P_GFX_TXN5	V4	PEG_TXN5_C			C3323	DIS@0.1U/10V_4X	PEG_TXN5							PEG_TXN5 (14)
(14) PEG_RXP6	PEG_RXP6	V8	P_GFX_RXP6	P_GFX_TXP6	V2	PEG_TXP6_C	C3335	DIS@0.1U/10V_4X			PEG_TXP6							PEG_TXP6 (14)
(14) PEG_RXN6	PEG_RXN6	V7	P_GFX_RXN6	P_GFX_TXN6	V1	PEG_TXN6_C			C3340	DIS@0.1U/10V_4X	PEG_TXN6							PEG_TXN6 (14)
(14) PEG_RXP7	PEG_RXP7	U9	P_GFX_RXP7	P_GFX_TXP7	U3	PEG_TXP7_C	C3334	DIS@0.1U/10V_4X			PEG_TXP7							PEG_TXP7 (14)
(14) PEG_RXN7	PEG_RXN7	U8	P_GFX_RXN7	P_GFX_TXN7	U2	PEG_TXN7_C			C3343	DIS@0.1U/10V_4X	PEG_TXN7							PEG_TXN7 (14)
(14) PEG_RXP8	PEG_RXP8	U5	P_GFX_RXP8	P_GFX_TXP8	T5	PEG_TXP8_C	C3332	DIS@0.1U/10V_4X			PEG_TXP8							PEG_TXP8 (14)
(14) PEG_RXN8	PEG_RXN8	U6	P_GFX_RXN8	P_GFX_TXN8	T4	PEG_TXN8_C			C3331	DIS@0.1U/10V_4X	PEG_TXN8							PEG_TXN8 (14)
(14) PEG_RXP9	PEG_RXP9	T8	P_GFX_RXP9	P_GFX_TXP9	T2	PEG_TXP9_C	C3322	DIS@0.1U/10V_4X			PEG_TXP9							PEG_TXP9 (14)
(14) PEG_RXN9	PEG_RXN9	T7	P_GFX_RXN9	P_GFX_TXN9	T1	PEG_TXN9_C			C3321	DIS@0.1U/10V_4X	PEG_TXN9							PEG_TXN9 (14)
(14) PEG_RXP10	PEG_RXP10	R9	P_GFX_RXP10	P_GFX_TXP10	R3	PEG_TXP10_C	C3330	DIS@0.1U/10V_4X			PEG_TXP10							PEG_TXP10 (14)
(14) PEG_RXN10	PEG_RXN10	R8	P_GFX_RXN10	P_GFX_TXN10	R2	PEG_TXN10_C			C3329	DIS@0.1U/10V_4X	PEG_TXN10							PEG_TXN10 (14)
(14) PEG_RXP11	PEG_RXP11	R5	P_GFX_RXP11	P_GFX_TXP11	P5	PEG_TXP11_C	C3320	DIS@0.1U/10V_4X			PEG_TXP11							PEG_TXP11 (14)
(14) PEG_RXN11	PEG_RXN11	R6	P_GFX_RXN11	P_GFX_TXN11	P4	PEG_TXN11_C			C3319	DIS@0.1U/10V_4X	PEG_TXN11							PEG_TXN11 (14)
(14) PEG_RXP12	PEG_RXP12	P8	P_GFX_RXP12	P_GFX_TXP12	P2	PEG_TXP12_C	C3328	DIS@0.1U/10V_4X			PEG_TXP12							PEG_TXP12 (14)
(14) PEG_RXN12	PEG_RXN12	P7	P_GFX_RXN12	P_GFX_TXN12	P1	PEG_TXN12_C			C3327	DIS@0.1U/10V_4X	PEG_TXN12							PEG_TXN12 (14)
(14) PEG_RXP13	PEG_RXP13	N9	P_GFX_RXP13	P_GFX_TXP13	N3	PEG_TXP13_C	C3318	DIS@0.1U/10V_4X			PEG_TXP13							PEG_TXP13 (14)
(14) PEG_RXN13	PEG_RXN13	N8	P_GFX_RXN13	P_GFX_TXN13	N2	PEG_TXN13_C			C3317	DIS@0.1U/10V_4X	PEG_TXN13							PEG_TXN13 (14)
(14) PEG_RXP14	PEG_RXP14	N5	P_GFX_RXP14	P_GFX_TXP14	M5	PEG_TXP14_C	C3326	DIS@0.1U/10V_4X			PEG_TXP14							PEG_TXP14 (14)
(14) PEG_RXN14	PEG_RXN14	N6	P_GFX_RXN14	P_GFX_TXN14	M4	PEG_TXN14_C			C3325	DIS@0.1U/10V_4X	PEG_TXN14							PEG_TXN14 (14)
(14) PEG_RXP15	PEG_RXP15	M8	P_GFX_RXP15	P_GFX_TXP15	M2	PEG_TXP15_C	C3316	DIS@0.1U/10V_4X			PEG_TXP15							PEG_TXP15 (14)
(14) PEG_RXN15	PEG_RXN15	M7	P_GFX_RXN15	P_GFX_TXN15	M1	PEG_TXN15_C			C3315	DIS@0.1U/10V_4X	PEG_TXN15							PEG_TXN15 (14)

		AE5	P_GPP_RXP0	P_GPP_TXP0	AD5														
		AE6	P_GPP_RXN0	P_GPP_TXN0	AD4														
		AD8	P_GPP_RXP1	P_GPP_TXP1	AD2														
		AD7	P_GPP_RXN1	P_GPP_TXN1	AD1														
TO ON BOARD LAN (27) PCIE_RXP2_LAN	PCIE_RXP2_LAN	AC9	P_GPP_RXP2	P_GPP_TXP2	AC3	PCIE_TXP2_LAN_C	C2001	0.1U/10V_4										PCIE_TXP2_LAN (27)	TO ON BOARD LAN
(27) PCIE_RXN2_LAN	PCIE_RXN2_LAN	AC8	P_GPP_RXN2	P_GPP_TXN2	AC2	PCIE_TXN2_LAN_C			C2002	0.1U/10V_4								PCIE_TXN2_LAN (27)	
(30) PCIE_RXP3	PCIE_RXP3	AC5	P_GPP_RXP3	P_GPP_TXP3	AB5	PCIE_TXP3_WLAN_C	C2003	0.1U/10V_4										PCIE_TXP3 (30)	TO WLAN
TO WLAN (30) PCIE_RXN3	PCIE_RXN3	AC6	P_GPP_RXN3	P_GPP_TXN3	AB4	PCIE_TXN3_WLAN_C			C2004	0.1U/10V_4								PCIE_TXN3 (30)	

(8) UMI_RXP0		AG8	P_UMI_RXP0	P_UMI_TXP0	AG2	UMI_TXP0_C	C2005	0.1U/10V_4			UMI_TXP0							UMI_TXP0 (8)
(8) UMI_RXN0		AG9	P_UMI_RXN0	P_UMI_TXN0	AG3	UMI_TXN0_C			C2006	0.1U/10V_4	UMI_TXN0							UMI_TXN0 (8)
(8) UMI_RXP1		AG6	P_UMI_RXP1	P_UMI_TXP1	AF4	UMI_TXP1_C	C2007	0.1U/10V_4			UMI_TXP1							UMI_TXP1 (8)
(8) UMI_RXN1		AG5	P_UMI_RXN1	P_UMI_TXN1	AF5	UMI_TXN1_C			C2008	0.1U/10V_4	UMI_TXN1							UMI_TXN1 (8)
(8) UMI_RXP2		AF7	P_UMI_RXP2	P_UMI_TXP2	AF1	UMI_TXP2_C	C2009	0.1U/10V_4			UMI_TXP2							UMI_TXP2 (8)
(8) UMI_RXN2		AF8	P_UMI_RXN2	P_UMI_TXN2	AF2	UMI_TXN2_C			C2010	0.1U/10V_4	UMI_TXN2							UMI_TXN2 (8)
(8) UMI_RXP3		AE8	P_UMI_RXP3	P_UMI_TXP3	AE2	UMI_TXP3_C	C2011	0.1U/10V_4			UMI_TXP3							UMI_TXP3 (8)
(8) UMI_RXN3		AE9	P_UMI_RXN3	P_UMI_TXN3	AE3	UMI_TXN3_C			C2012	0.1U/10V_4	UMI_TXN3							UMI_TXN3 (8)

+1.2V_VDDPR R2001 196/F_6 P_ZVDDP AG11 P_ZVDDP

AH11 P_ZVSS R2002 196/F_6

Trinity APU

QUANTA CONFIDENTIAL
PROPRIETARY TO ICT FOR REVIEW

PROJECT : LZ2C

Quanta Computer Inc.

Size	Document Number	Rev
	APU 1/5(PCIE/UMI/GPP)	2A
Date: Monday, January 09, 2012	Sheet 2 of 51	

(4,5,6,10,12,13,37,40,41,46,47) +1.5V_SUS

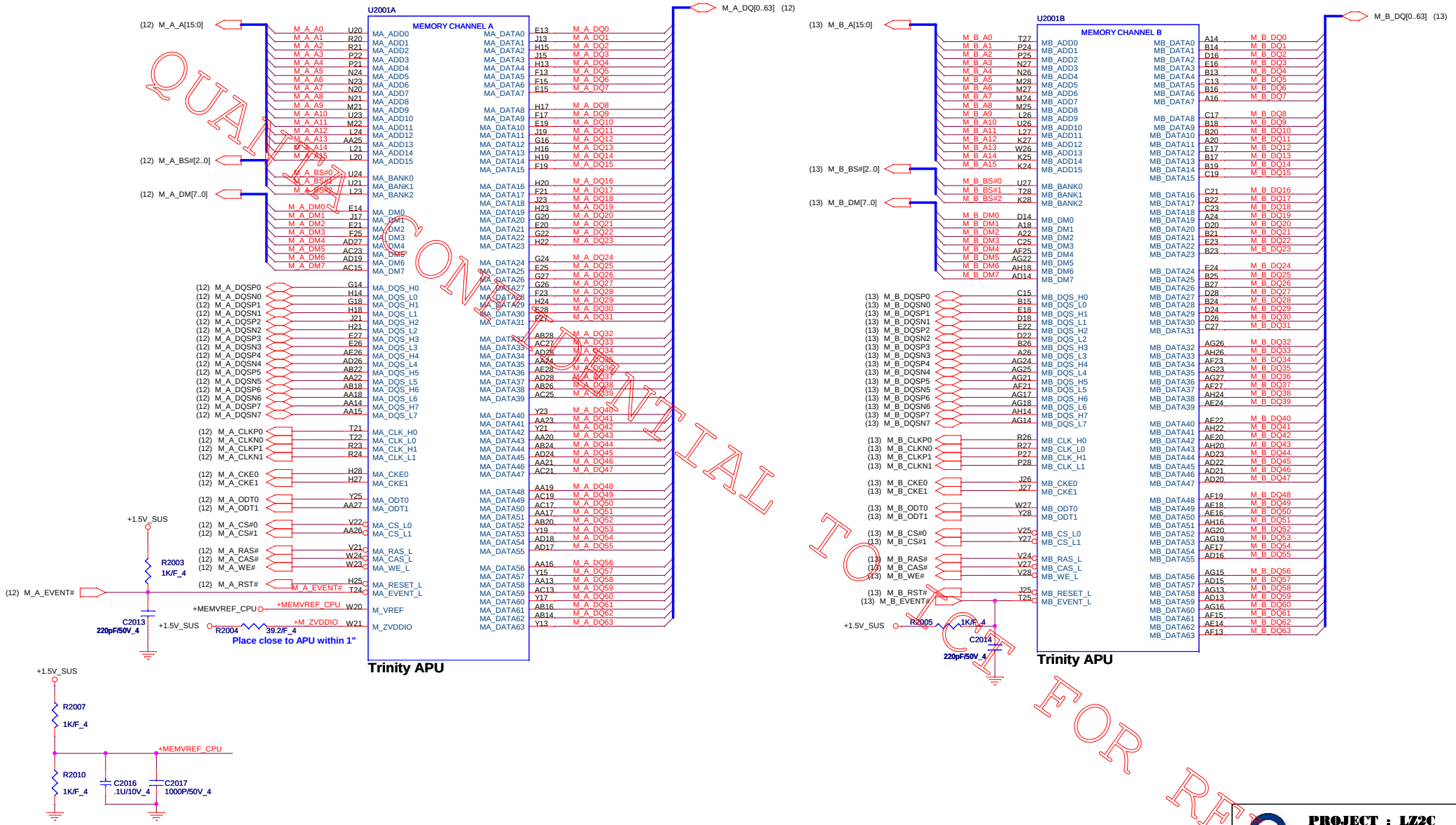

QUANTA CONFIDENTIAL
FOR REVIEW

PROJECT : LZ2C		
Quanta Computer Inc.		
Size	Document Number: APU 2/5(DDR3 MEM I/F)	Rev: 2A
Date: Monday, January 09, 2012	Sheet 3 of 51	

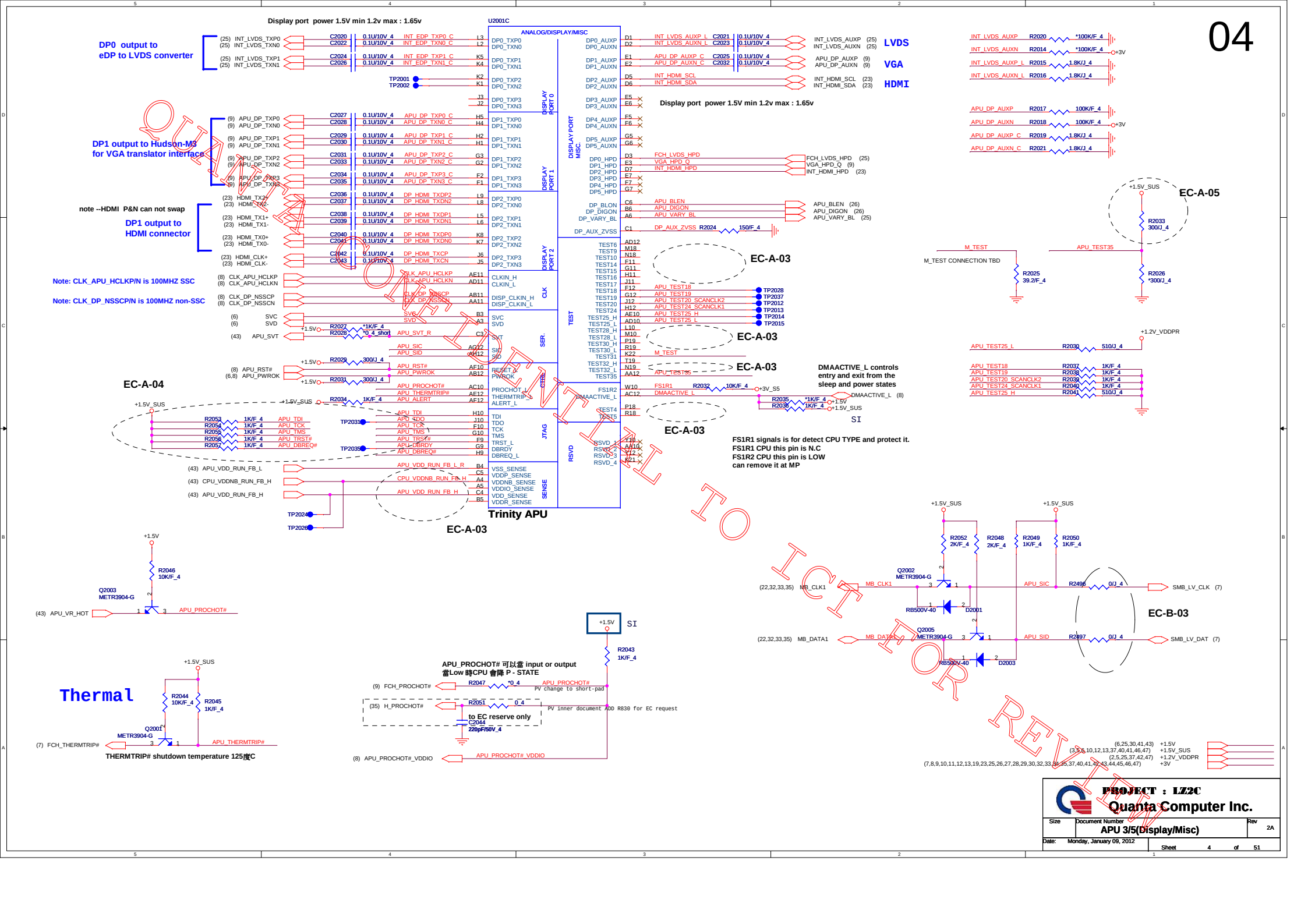
Display port power 1.5V min 1.2v max : 1.65v
U2001C
ANALOG/DISPLAY/MISC
Trinity APU
DP0 output to eDP to LVDS converter
DP1 output to Hudson-M3 for VGA translator interface
DP1 output to HDMI connector
note --HDMI P&N can not swap
Note: CLK_APU_HCLKP/N is 100MHZ SSC
Note: CLK_DP_NSSCP/N is 100MHZ non-SSC
LVDS
VGA
HDMI
Display port power 1.5V min 1.2v max : 1.65v
EC-A-03
EC-A-04
EC-A-05
EC-B-03
DMAACTIVE_L controls entry and exit from the sleep and power states
FS1R1 signals is for detect CPU TYPE and protect it.
FS1R1 CPU this pin is N.C
FS1R2 CPU this pin is LOW
can remove it at MP
Thermal
THERMTRIP# shutdown temperature 125度C
APU_PROCHOT# 可以當 input or output
當Low 時CPU 會降 P - STATE
to EC reserve only
M_TEST CONNECTION TBD
PROJECT : LZ2C
Quanta Computer Inc.
APU 3/5(Display/Misc)
Monday, January 09, 2012
Sheet 4 of 51

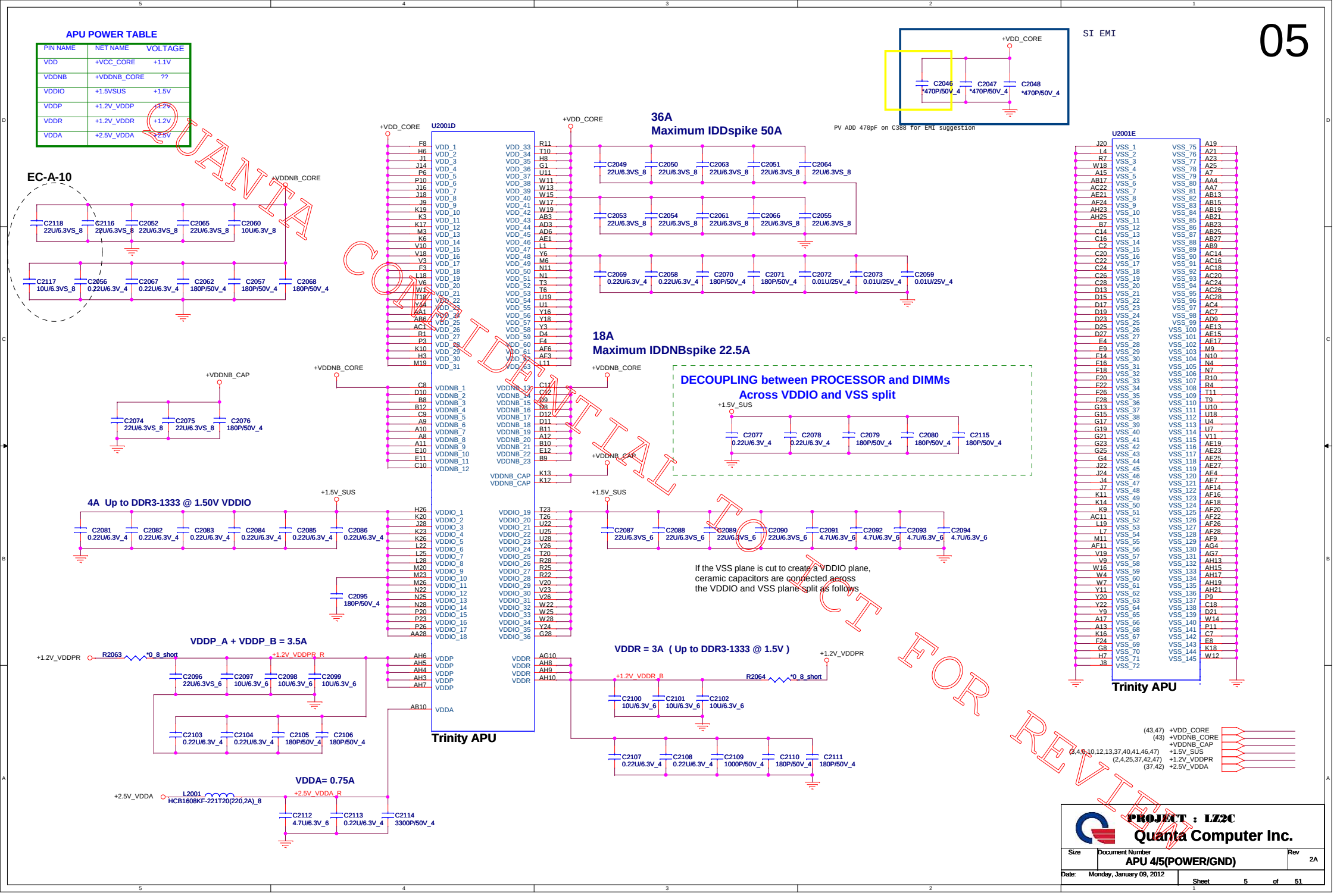
05
APU POWER TABLE
PIN NAME | NET NAME | VOLTAGE
VDD | +VCC_CORE | +1.1V
VDDNB | +VDDNB_CORE | ??
VDDIO | +1.5VSUS | +1.5V
VDDP | +1.2V_VDDP | +1.2V
VDDR | +1.2V_VDDR | +1.2V
VDDA | +2.5V_VDDA | +2.5V
SI EMI
PV ADD 470pF on C388 for EMI suggestion
EC-A-10
U2001D
Trinity APU
36A
Maximum IDDspike 50A
18A
Maximum IDDNBspike 22.5A
DECOUPLING between PROCESSOR and DIMMs
Across VDDIO and VSS split
4A Up to DDR3-1333 @ 1.50V VDDIO
If the VSS plane is cut to create a VDDIO plane,
ceramic capacitors are connected across
the VDDIO and VSS plane split as follows
VDDP_A + VDDP_B = 3.5A
VDDR = 3A (Up to DDR3-1333 @ 1.5V)
VDDA= 0.75A
U2001E
Trinity APU
(43,47) +VDD_CORE
(43) +VDDNB_CORE
+VDDNB_CAP
(3,4,6,10,12,13,37,40,41,46,47) +1.5V_SUS
(2,4,25,37,42,47) +1.2V_VDDPR
(37,42) +2.5V_VDDA
QUANTA CONFIDENTIAL TO ACT FOR REVIEW
PROJECT : LZ2C
Quanta Computer Inc.
Size
Document Number
APU 4/5(POWER/GND)
Rev
2A
Date: Monday, January 09, 2012
Sheet 5 of 51

(4,25,30,41,43) +1.5V
(3,4,5,10,12,13,37,40,41,46,47) +1.5V_SUS

VID Override Circuit

		BOOT VOLTAGE	
SVC	SVD	VFIX_+VDD =VCC/GND	VFIX_+VDD =OPEN
0	0	1.1	1.1
0	1	1.0	1.2
1	0	0.9	1.0
1	1	0.8	0.8

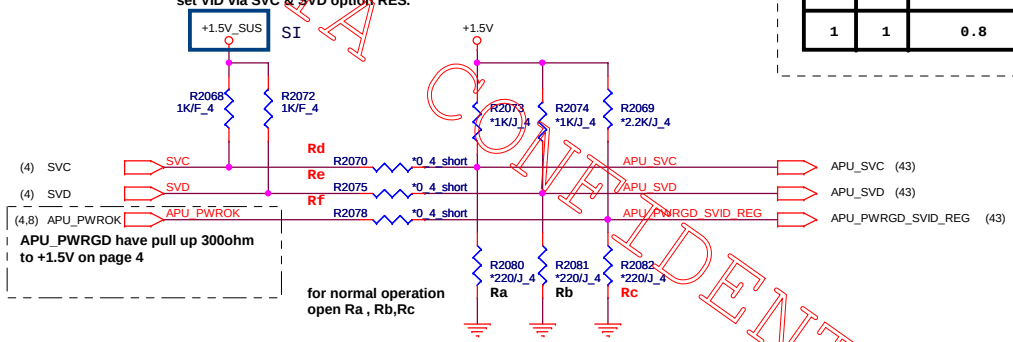

QUANTA CONFIDENTIAL TO ICT FOR REVIEW

PROJECT : LZ2C
Quanta Computer Inc.

Size	Document Number	Rev
	APU 5/5(Other)	2A
Date: Monday, January 09, 2012	Sheet 6 of 51	

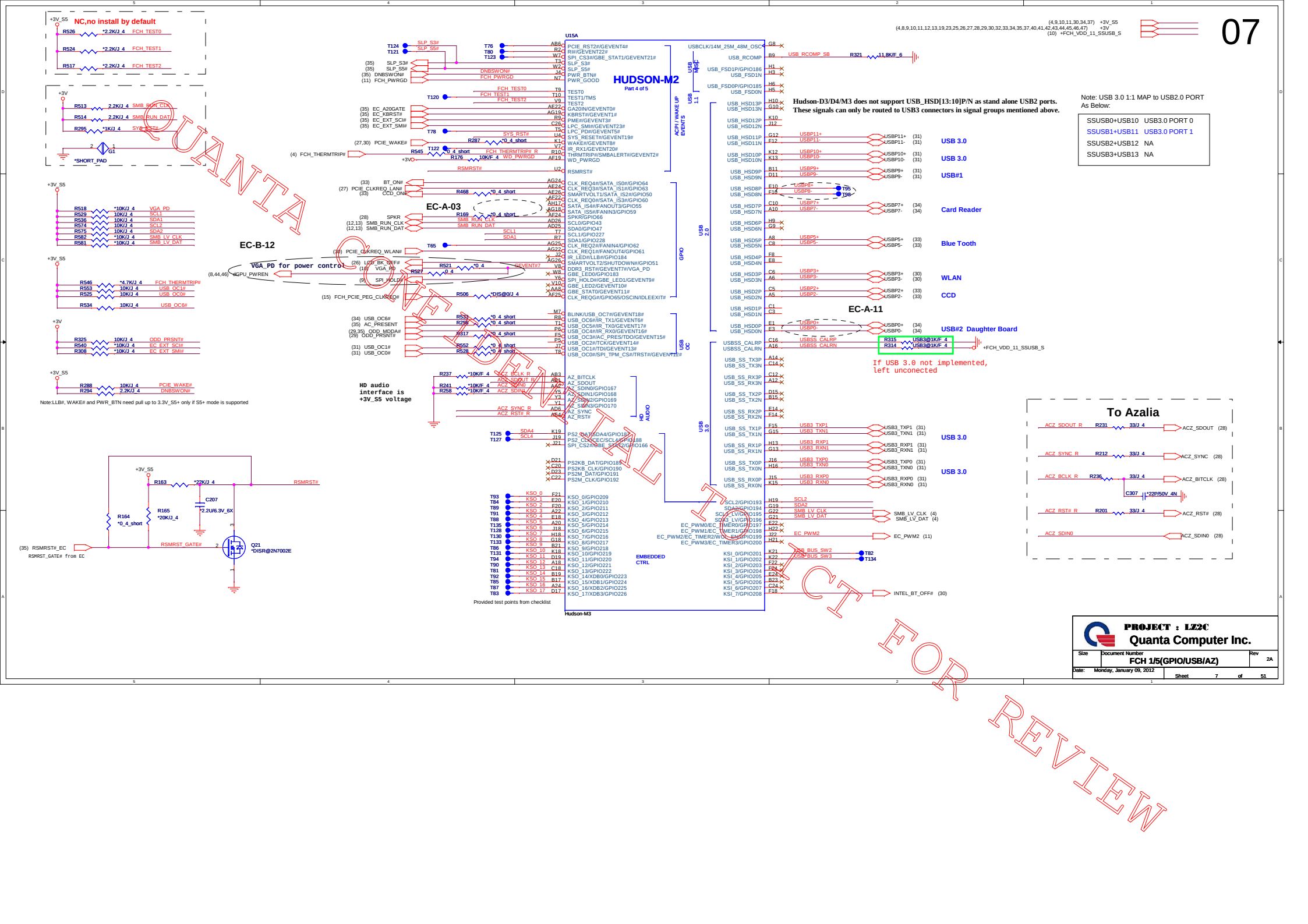
NC,no install by default
R526 *2.2K/J_4 FCH_TEST0
R524 *2.2K/J_4 FCH_TEST1
R517 *2.2K/J_4 FCH_TEST2
R513 2.2K/J_4 SMB_RUN_CLK
R514 2.2K/J_4 SMB_RUN_DAT
R295 *1K/J_4 SYS_RST#
*SHORT_PAD
EC-B-12
VGA_PD for power control
R518 *10K/J_4 VGA_PD
R529 10K/J_4 SCL1
R536 10K/J_4 SDA1
R574 10K/J_4 SCL2
R575 10K/J_4 SDA2
R582 *10K/J_4 SMB_LV_CLK
R581 *10K/J_4 SMB_LV_DAT
R546 *4.7K/J_4 FCH_THERMTRIP#
R553 10K/J_4 USB_OC1#
R525 10K/J_4 USB_OC0#
R534 10K/J_4 USB_OC6#
R325 10K/J_4 ODD_PRSNT#
R540 *10K/J_4 EC_EXT_SCI#
R308 *10K/J_4 EC_EXT_SMI#
R288 10K/J_4 PCIE_WAKE#
R294 2.2K/J_4 DNBSWON#
Note:LLB#, WAKE# and PWR_BTN need pull up to 3.3V_S5+ only if S5+ mode is supported
R163 *22K/J_4 RSMRST#
R164 *0_4 short
R165 *20K/J_4
C207 *2.2U/6.3V_6X
RSMRST_GATE#
(35) RSMRST#_EC
RSMRST_GATE# from EC
Q21 *DISR@2N7002E
HUDSON-M2
Part 4 of 5
Hudson-M3
EC-A-03
EC-A-11
HD audio interface is +3V_S5 voltage
Provided test points from checklist
Hudson-D3/D4/M3 does not support USB_HSD[13:10]P/N as stand alone USB2 ports. These signals can only be routed to USB3 connectors in signal groups mentioned above.
USB 3.0
USB 3.0
USB#1
Card Reader
Blue Tooth
WLAN
CCD
USB#2 Daughter Board
USB 3.0
USB 3.0
If USB 3.0 not implemented, left unconected
Note: USB 3.0 1:1 MAP to USB2.0 PORT As Below:
SSUSB0+USB10 USB3.0 PORT 0
SSUSB1+USB11 USB3.0 PORT 1
SSUSB2+USB12 NA
SSUSB3+USB13 NA
To Azalia
ACZ_SDOUT_R R231 33/J_4 ACZ_SDOUT (28)
ACZ_SYNC_R R212 33/J_4 ACZ_SYNC (28)
ACZ_BCLK_R R236 33/J_4 ACZ_BITCLK (28)
C307 *22P/50V_4N
ACZ_RST#_R R201 33/J_4 ACZ_RST# (28)
ACZ_SDIN0 ACZ_SDIN0 (28)
PROJECT : LZ2C
Quanta Computer Inc.
Size
Document Number
FCH 1/5(GPIO/USB/AZ)
Rev 2A
Date: Monday, January 09, 2012
Sheet 7 of 51
07
QUANTA
COMPUTER
CONFIDENTIAL
FOR REVIEW

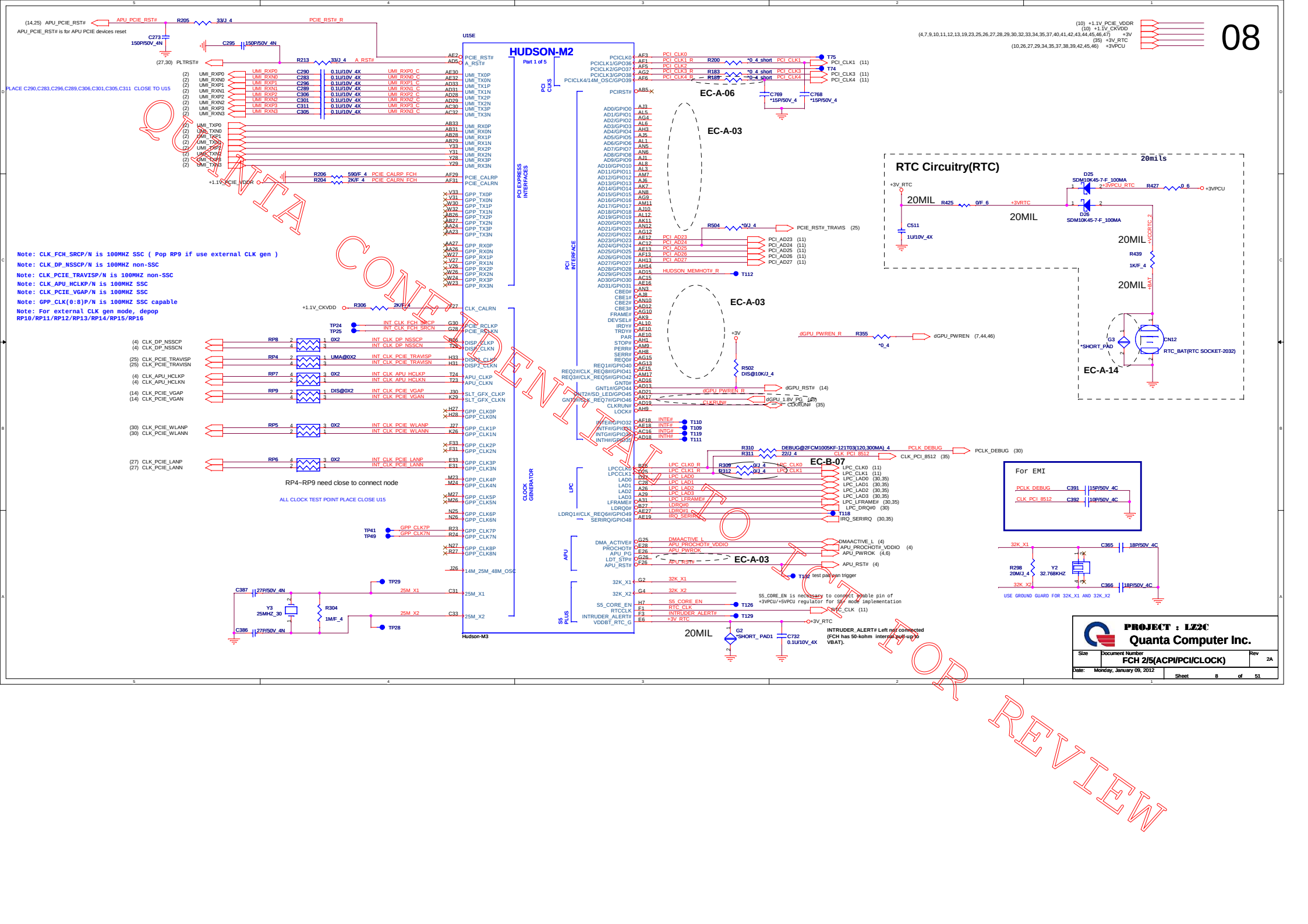
HUDSON-M2
Part 1 of 5
U15E
Hudson-M3
EC-A-06
EC-A-03
EC-A-14
EC-B-07
RTC Circuitry(RTC)
20mils
For EMI
PROJECT : LZ2C
Quanta Computer Inc.
FCH 2/5(ACPI/PCI/CLOCK)
Monday, January 09, 2012
Sheet 8 of 51
RP4~RP9 need close to connect node
ALL CLOCK TEST POINT PLACE CLOSE U15
PLACE C290,C283,C296,C289,C306,C301,C305,C311 CLOSE TO U15
Note: CLK_FCH_SRCP/N is 100MHZ SSC (Pop RP9 if use external CLK gen)
Note: CLK_DP_NSSCP/N is 100MHZ non-SSC
Note: CLK_PCIE_TRAVISP/N is 100MHZ non-SSC
Note: CLK_APU_HCLKP/N is 100MHZ SSC
Note: CLK_PCIE_VGAP/N is 100MHZ SSC
Note: GPP_CLK(0:8)P/N is 100MHZ SSC capable
Note: For external CLK gen mode, depop
RP10/RP11/RP12/RP13/RP14/RP15/RP16
INTRUDER_ALERT# Left not connected (FCH has 50-kohm internal pull-up to VBAT).
S5_CORE_EN is necessary to connect bypable pin of +3VPCU/+5VPCU regulator for S5V mode implementation
USE GROUND GUARD FOR 32K_X1 AND 32K_X2
QCT CONFIDENTIAL
INTERNAL USE ONLY
REVIEW

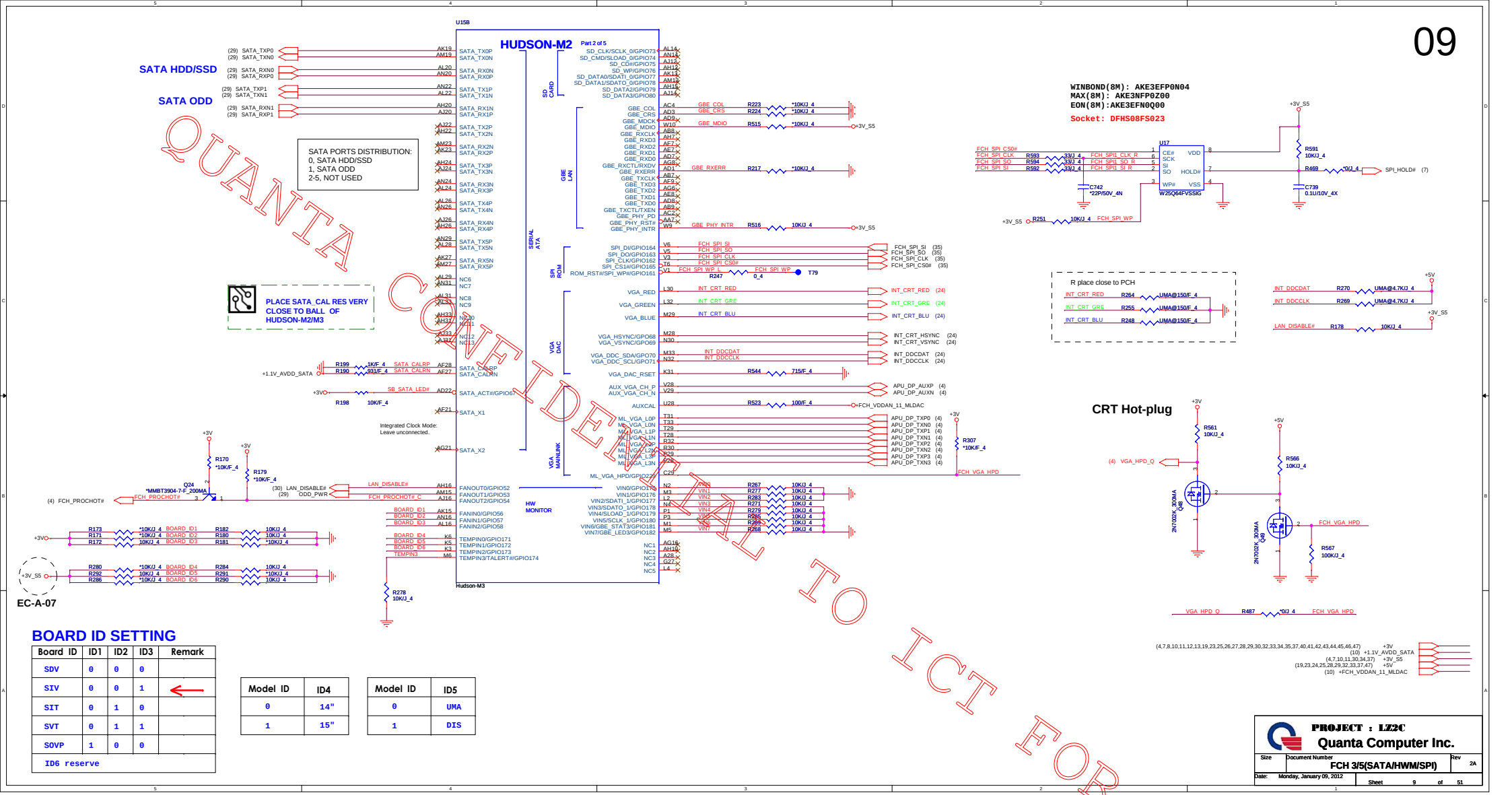

QUANTA CONFIDENTIAL
ICT FOR REVIEW

BOARD ID SETTING

Board ID	ID1	ID2	ID3	Remark
SDV	0	0	0	
SIV	0	0	1	←
SIT	0	1	0	
SVT	0	1	1	
SOVP	1	0	0	
ID6 reserve				

Model ID	ID4
0	14"
1	15"

Model ID	ID5
0	UMA
1	DIS

PROJECT : LZ2C			
Quanta Computer Inc.			
Size	Document Number		Rev
	FCH 3/5(SATA/HWM/SPI)		2A
Date: Monday, January 09, 2012		Sheet 9 of 51	

PLACE ALL THE DECOUPLING CAPS ON THIS SHEET CLOSE TO SB AS POSSIBLE.

VDDQ--3.3V I/O power

VDD-- S/B CORE power

CKVDD_1.1V-- Internal clock Generator I/O power

PCIE_VDDR--PCIE I/O power

AVDD_SATA--SATA phy power

S5_3.3--3.3V standby power

S5_1.1V--1.1V standby power

S5 plus mode

HUDSON-M2 Part 3 of 5 (U15C)

HUDSON-M2 Part 5 of 5 (U15D)

Hudson-M3

EC-B-01

62 mA Max

233 mA Max

Checklist request one 1uF capacitor

VGA_PD is generated from FCH

COMPAL CONFIDENTIAL
To ICT FOR REVIEW

PROJECT : LZ2C
Quanta Computer Inc.
Size | Document Number: FCH 4/5(POWER/GND) | Rev: 2A
Date: Monday, January 09, 2012 | Sheet 10 of 51

OVERLAP COMMON PADS WHERE POSSIBLE FOR DUAL-OP RESISTORS.

(4,7,8,9,10,12,13,19,23,25,26,27,28,29,30,32,33,34,35,37,40,41,42,43,44,45,46,47) +3V
(4,7,9,10,30,34,37) +3V_S5

STRAPS PINS

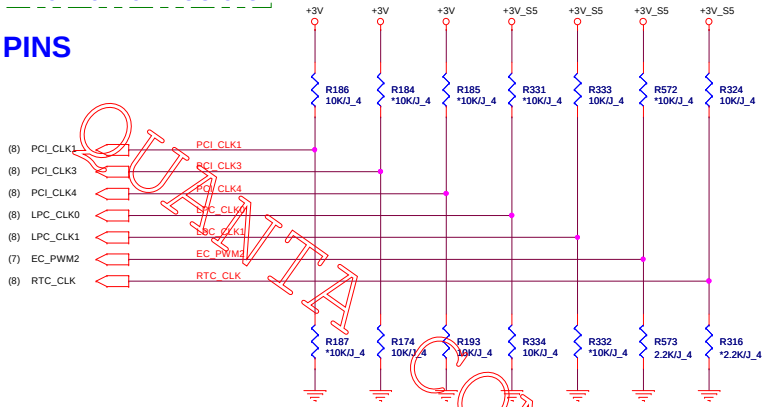

FCH PWRGD CKT

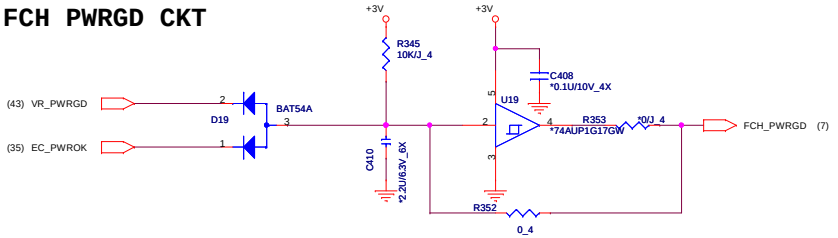

REQUIRED STRAPS

	--------	PCI_CLK1	--------	PCI_CLK3	PCI_CLK4	LPC_CLK0	LPC_CLK1	EC_PWM2	RTC_CLK
PULL HIGH	--------	ALLOW PCIE Gen2 DEFAULT	--------	USE DEBUG STRAP	non_Fusion CLOCK MODE	EC ENABLED	CLKGEN ENABLED DEFAULT	LPC ROM	S5 PLUS MODE DISABLED DEFAULT
PULL LOW	--------	FORCE PCIE Gen1	--------	IGNORE DEBUG STRAP DEFAULT	FUSION CLOCK MODE DEFAULT	EC DISABLED DEFAULT	CLKGEN DISABLED	SPI ROM DEFAULT	S5 PLUS MODE ENABLED

DEBUG STRAPS

FCH HAS 15K INTERNAL PU FOR PCI_AD[27:23]

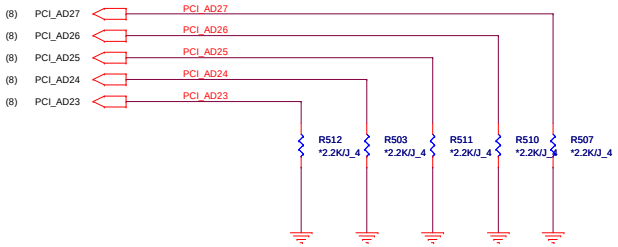

	PCI_AD27	PCI_AD26	PCI_AD25	PCI_AD24	PCI_AD23
PULL HIGH	USE PCI PLL DEFAULT	DISABLE ILA AUTORUN DEFAULT	USE FC PLL DEFAULT	USE DEFAULT PCIE STRAPS DEFAULT	DISABLE PCI MEM BOOT DEFAULT
PULL LOW	BYPASS PCI PLL	ENABLE ILA AUTORUN	BYPASS FC PLL	USE EEPROM PCIE STRAPS	ENABLE PCI MEM BOOT

QUANTA CONFIDENTIAL NOT FOR REVIEW

PROJECT : LZ2C
Quanta Computer Inc.

Size	Document Number	Rev
	FCH 5/5(Strap & PWRGD)	2A
Date: Monday, January 09, 2012	Sheet 11 of 51	

DDR_STD(DDR)

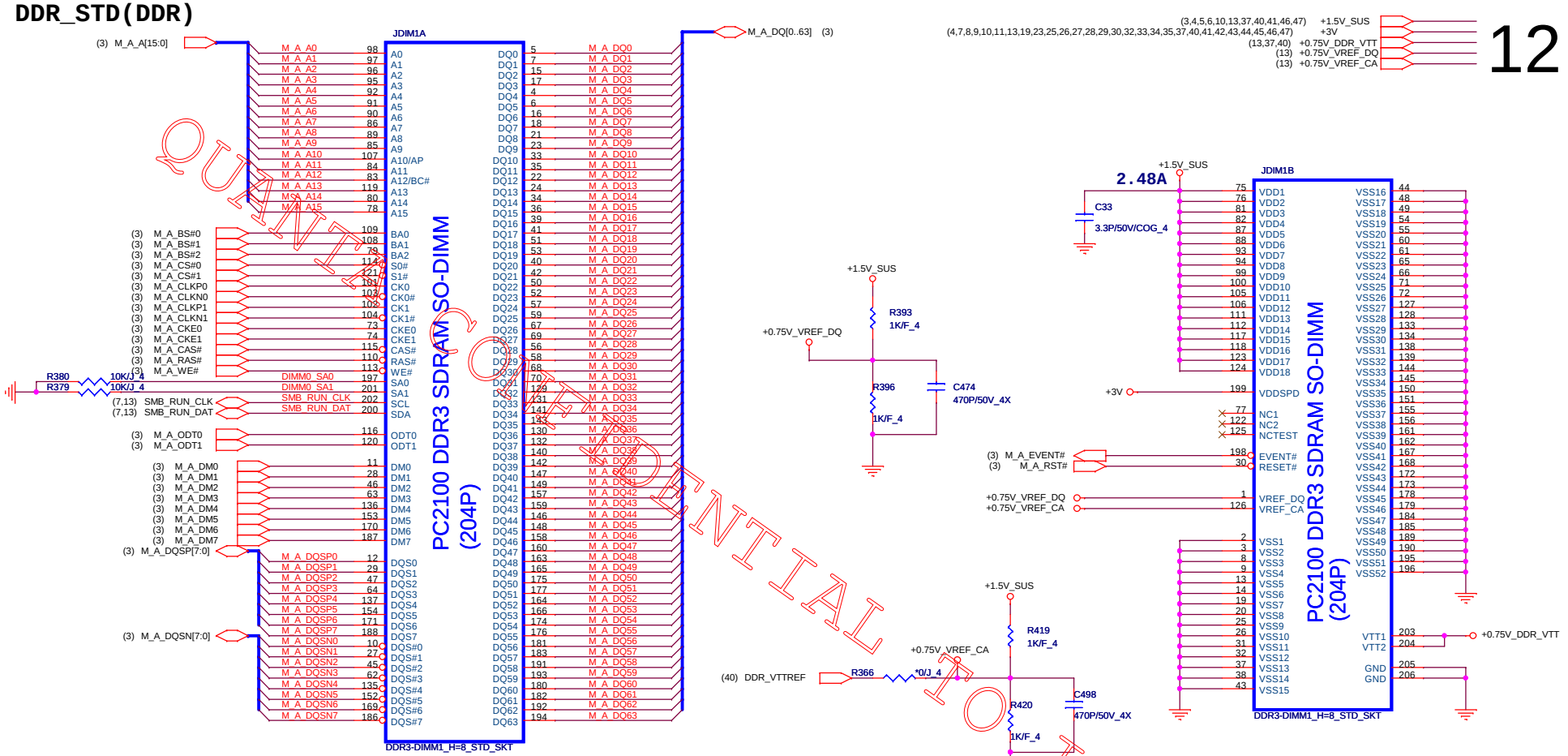

QUANTA CONFIDENTIAL NOT FOR REVIEW

Place these Caps near So-Dimm0.

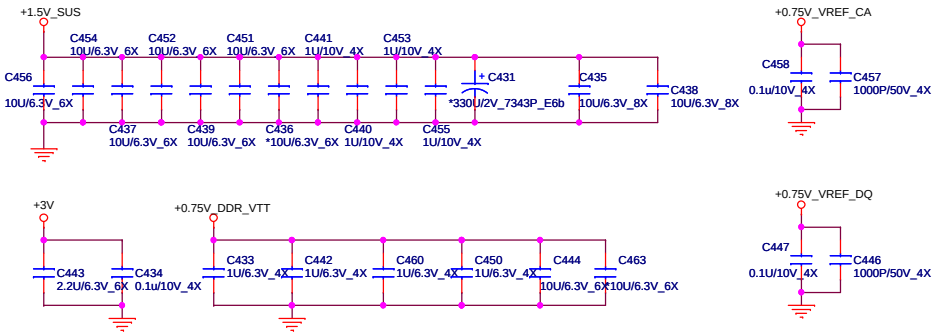

PROJECT : LZ2C		
Quanta Computer Inc.		
Size	Document Number: DDRIII SO-DIMM-0	Rev: 2A
Date: Monday, January 09, 2012	Sheet 12 of 51	

DDR_STD(DDR)

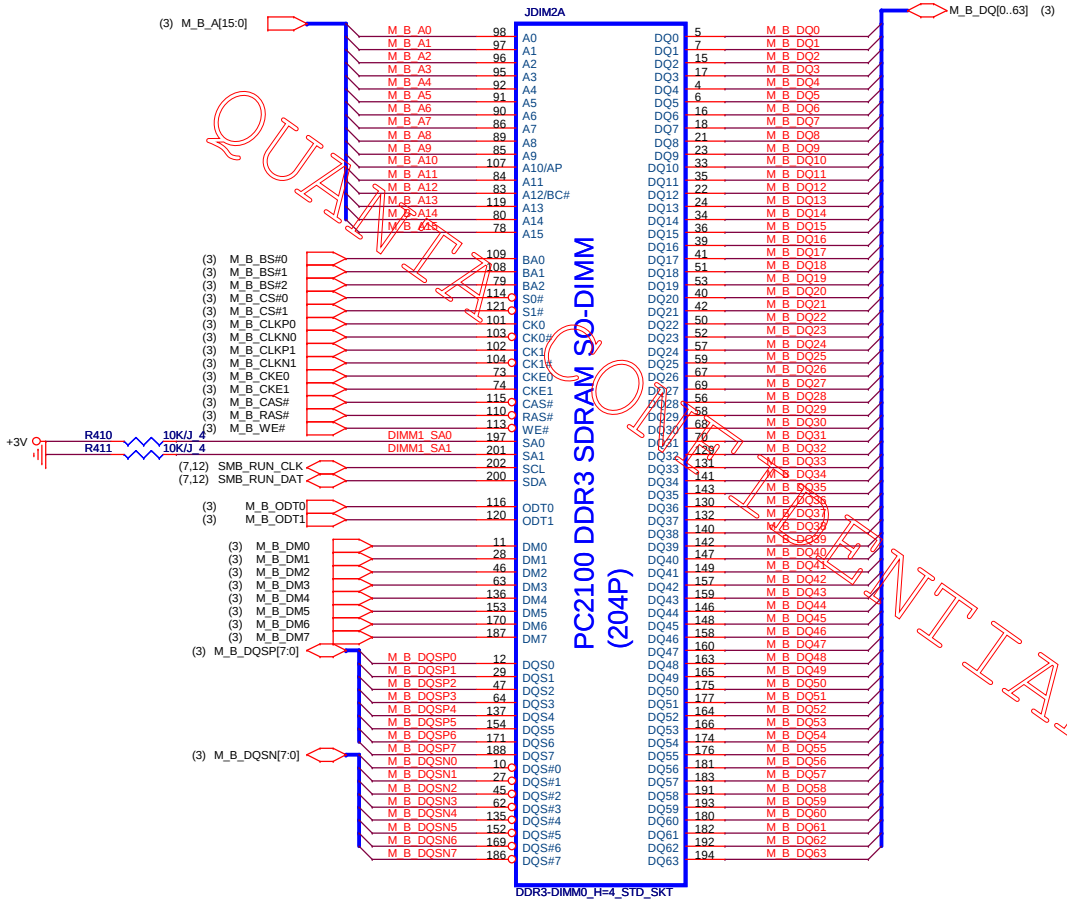

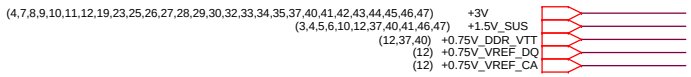

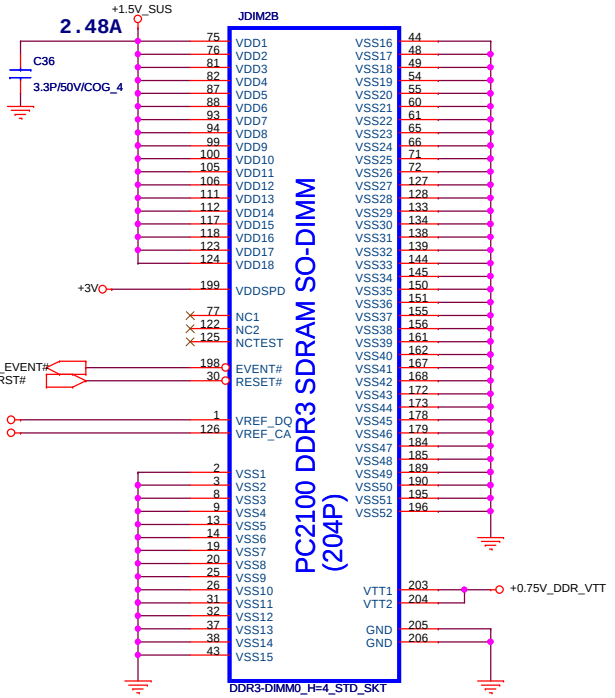

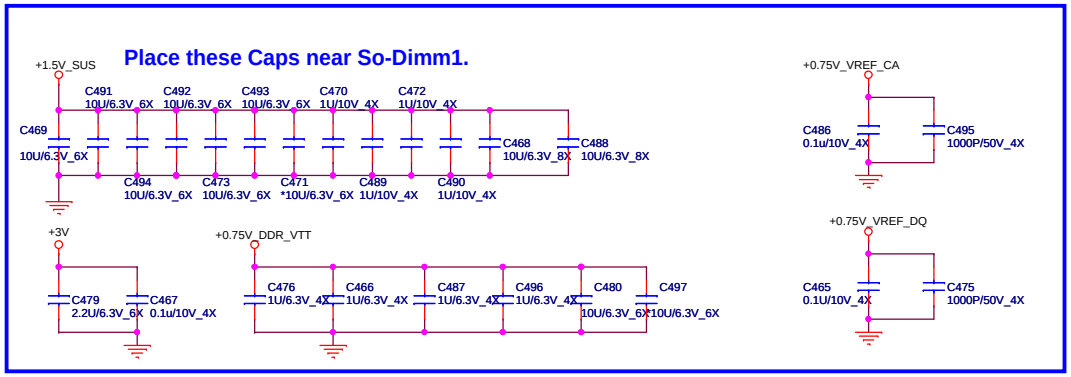

QUANTA CONFIDENTIAL
TO ICT FOR REVIEW

PROJECT : LZ2C

Quanta Computer Inc.

Size	Document Number	Rev
	DDRIII SO-DIMM-1	2A
Date: Monday, January 09, 2012	Sheet 13 of 51	

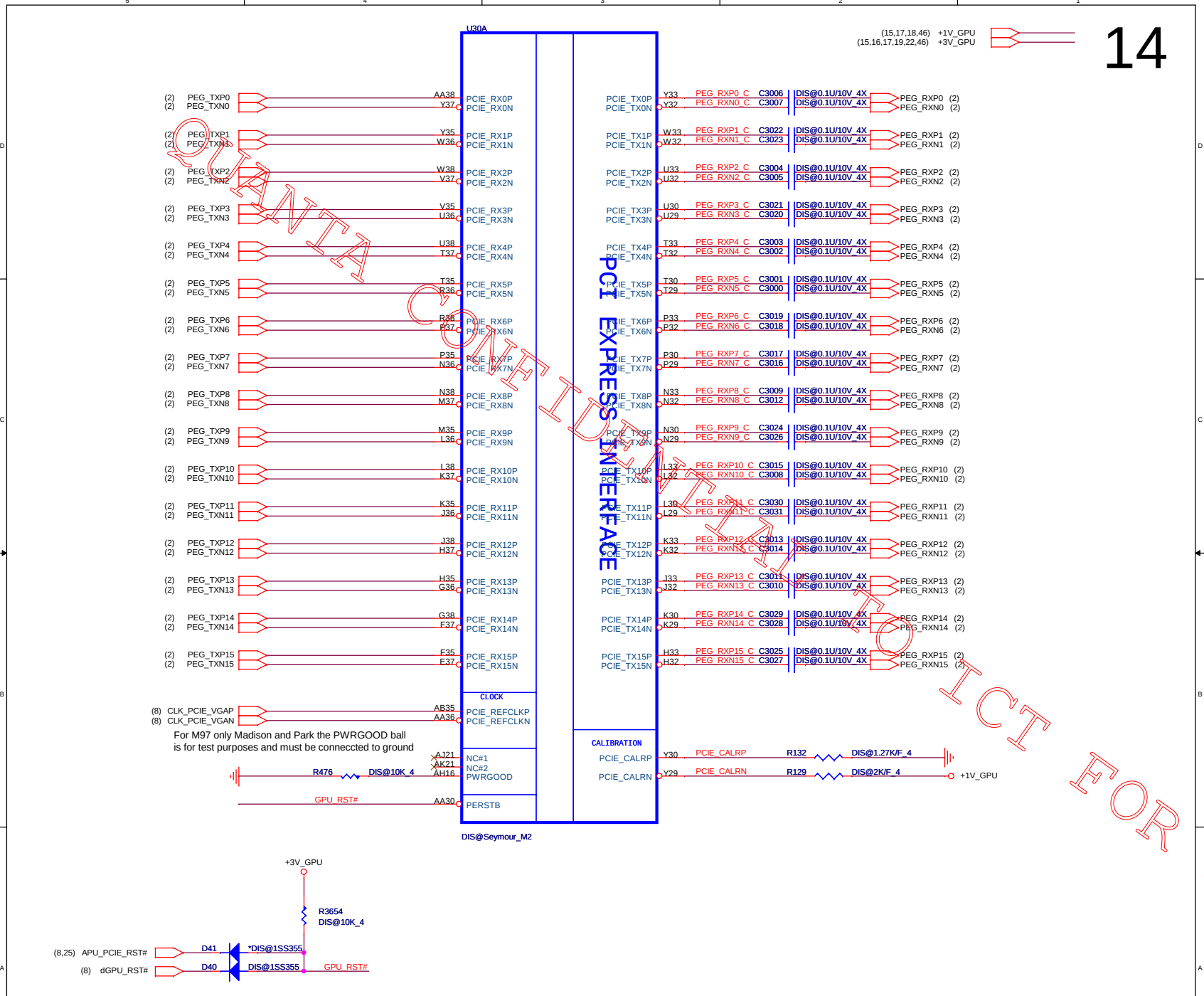

QUANTA CONFIDENTIAL TO ICT FOR REVIEW

PROJECT : LZ2C

Quanta Computer Inc.

Size	Document Number	Rev
	Seymour/Thames-M2 PCIE I/F	2A

Date: Monday, January 09, 2012 Sheet 14 of 51

QUANTA COMPUTER CONFIDENTIAL
DO NOT COPY
FOR REVIEW

(14,17,18,46) +1V_GPU
(17,18,22,45) +1.8V_GPU
(8,10,26,27,29,34,35,37,38,39,42,45,46) +3VPCU
(14,16,17,19,22,46) +3V_GPU

U30B

MUTI GFX

NC on Robson
Capilano support

(22) RAM_STRAP0
(22) RAM_STRAP1
(22) RAM_STRAP2
(22) RAM_STRAP3

DVPCNTL_MVP_0 AR8
DVPCNTL_MVP_1 AU8
DVPCNTL_0 AP8
DVPCNTL_1 AW8
DVPCNTL_2 AR3
DVPCLK AR1
DVPDATA_0 AU1
DVPDATA_1 AU3
DVPDATA_2 AW3
DVPDATA_3 AP6
DVPDATA_4 AW5
DVPDATA_5 AU5
DVPDATA_6 AR6
DVPDATA_7 AW6
DVPDATA_8 AU6
DVPDATA_9 AT7
DVPDATA_10 AV7
DVPDATA_11 AN7
DVPDATA_12 AV9
DVPDATA_13 AT9
DVPDATA_14 AR10
DVPDATA_15 AW10
DVPDATA_16 AU10
DVPDATA_17 AP10
DVPDATA_18 AV11
DVPDATA_19 AT11
DVPDATA_20 AR12
DVPDATA_21 AW12
DVPDATA_22 AU12
DVPDATA_23 AP12

NC on Robson
Capilano supprt
SCL must be tied high
if not used

+3V_GPU
R154 *DIS@4.7K/F_4
R137 *DIS@4.7K/F_4

I2C
SCL AK26
SDA AJ26
(22) SCL
(22) SDA

GENERAL PURPOSE I/O
GPIO_0 AH20
GPIO_21 AH18
GPIO_2 AN16
GPIO_3_SMBDATA AN23
GPIO_4_SMBCLK AJ23
GPIO_5_AC_BATT AH17
GPIO_6 AJ17
GPIO_7_BLON AK17
GPIO_8_ROMSO AJ13
GPIO_9_ROMSI AH15
GPIO_10_ROMSCK AJ16
GPIO_11 AK16
GPIO_12 AL16
GPIO_13 AM16
GPIO_14_HPD2 AM14
GPIO_15_PWRCNTL_0 AM13
GPIO_16_SSIN AK14
GPIO_17_THERMAL_INT AG30
GPIO_18_HPD3 AN14
GPIO_19_CTF AM17
GPIO_20_PWRCNTL_1 AL13
GPIO_21_BB_EN AJ14
GPIO_22_ROMCSB AK13
GPIO_23_CLKREQB AN13
JTAG_TRSTB AM23
JTAG_TDI AN23
JTAG_TCK AK23
JTAG_TMS AL24
JTAG_TDO AM24
GENERICA AJ19
GENERICB AK19
GENERICC AJ20
GENERICD AK20
GENERICE_HPD4 AJ24
GENERICF AH26
GENERICG AH24

R95 *DIS@10K/F_4
(22) GPU_GPIO0
(22) GPU_GPIO1
(22) GPU_GPIO2
(22) GPIO3_SMBDAT
(22) GPIO4_SMBCLK

+3V_GPU
R177 DIS@3K/F_4
R191 DIS@3K/F_4
EC-A-25

(22) DGPU_BLON
(22) SOUT_GPIO8
(22) SIN_GPIO9
(22) GPIO10_ROMSCK
(22) RAM_CFG0
(22) RAM_CFG1
(22) RAM_CFG2
(44) GFX_CORE_CNTRL0
(44) GFX_CORE_CNTRL1
(22) ALT#_GPIO17
(22) SCS#_GPIO22
(7) FCH_PCIE_PEG_CLKREQ#

T12 T4 T3 T3098 R482 R93 *DIS@10K/F_4
CLK_VGA_27M_SS_R
ALT#_GPIO17
FCH_PCIE_PEG_CLKREQ#
T18 GPU_JTAG_TRSTB
T19 GPU_JTAG_TDI
T20 GPU_JTAG_TCK
T21 GPU_JTAG_TMS
T22 GPU_JTAG_TDO
T15 T5 T16 T11 T23

T24 *DIS@100K/F_4 R125
EXT_HDMI_HPD AK24
HPD1

DPA
TXCAP_DPA3P AU24
TXCAM_DPA3N AV23
TX0P_DPA2P AT25
TX0M_DPA2N AR24
TX1P_DPA1P AU26
TX1M_DPA1N AV25
TX2P_DPA0P AT27
TX2M_DPA0N AR26
TXCBP_DPB3P AR39
TXCBM_DPB3N AT39

DPB
TX3P_DPB2P AV31
TX3M_DPB2N AU30
TX4P_DPB1P AR32
TX4M_DPB1N AT31
TX5P_DPB0P AT33
TX5M_DPB0N AU32

DPC
TXCCP_DPC3P AU14
TXCCM_DPC3N AV13
TX0P_DPC2P AT15
TX0M_DPC2N AR14
TX1P_DPC1P AU16
TX1M_DPC1N AV15
TX2P_DPC0P AT17
TX2M_DPC0N AR16

DPD
TXCDP_DPD3P AU29
TXCDM_DPD3N AT19
TX3P_DPD2P AT21
TX3M_DPD2N AR20
TX4P_DPD1P AU22
TX4M_DPD1N AV21
TX5P_DPD0P AT23
TX5M_DPD0N AR22

Park Channel D-->No support
M92 Channel C&D-->No support

DAC2
R AD39
RB AD37
G AE36
GB AD35
B AF37
BB AE38
HSYNC AC36
VSYNC AC38
RSET AB34 R150 DIS@499/F_4
AVDD AD34
AVSSQ AE34
VDD1DI AC33
VSS1DI AC34

DAC2
R2 AC30
R2B AC31
G2 AD30
G2B AD31
B2 AF30
B2B AF31
C AC32
Y AD32
COMP AF32
H2SYNC AD29
V2SYNC AC29
VDD2DI AG31
VSS2DI AG32
A2VDD AG33
A2VDDQ AG33
A2VSSQ AF33
R2SET AA29

DDC/AUX
DDC1CLK AM26
DDC1DATA AN26
AUX1P AM27
AUX1N AL27
DDC2CLK AM19
DDC2DATA AL19
AUX2P AN20
AUX2N AM20
DDCCLK_AUX3P AL30
DDCDATA_AUX3N AM30
DDCCLK_AUX4P AL29
DDCDATA_AUX4N AM29
DDCCLK_AUX5P AN21
DDCDATA_AUX5N AM21
DDC6CLK AJ30
DDC6DATA AJ31
NC_DDCCLK_AUX7P AK30
NC_DDCDATA_AUX7N AK29

PLL/CLOCK
DPLL_PVDD AM32
DPLL_PVSS AN32
DPLL_VDDC AN31
VREFG AH13
XTALIN AV33
XTALOUT AU34

THERMAL
DPLUS AF29
DMINUS AG29
TS_FDO AK32
TSVDD AJ32
TSVSS AJ33

DIS@Seymour_M2

U30G

LVDS CONTROL
VARY_BL AK27
DIGON AJ27

TXCLK_UP_DPF3P AK35 T102
TXCLK_UN_DPF3N AL36 T104
TXOUT_U0P_DPF2P AJ38 T103
TXOUT_U0N_DPF2N AK37 T108
TXOUT_U1P_DPF1P AH35 T101
TXOUT_U1N_DPF1N AJ36 T106
TXOUT_U2P_DPF0P AG38 T105
TXOUT_U2N_DPF0N AH37 T107
TXOUT_U3P AF35
TXOUT_U3N AG36

LVTMDP
TXCLK_LP_DPE3P AP34
TXCLK_LN_DPE3N AR34
TXOUT_L0P_DPE2P AW37
TXOUT_L0N_DPE2N AU35
TXOUT_L1P_DPE1P AR37
TXOUT_L1N_DPE1N AU39
TXOUT_L2P_DPE0P AP35
TXOUT_L2N_DPE0N AR35
TXOUT_L3P AN36
TXOUT_L3N AP37

DIS@Seymour_M2

(1.8V@75mA DPLL_PVDD)
(1.8V@75mA DPLL_PVDD)
+1.8V_GPU L23 120 ohm/300mA DIS@BLM15BD121SN1D_300MA DPLL_PVDD
C234 DIS@10U/6.3V_8X
C174 DIS@1U/6.3V_4X
C209 DIS@0.1U/10V_4X

(1V@125mA DPLL_VDDC)
(1V@125mA DPLL_VDDC)
+1V_GPU L15 120 ohm/300mA DIS@BLM15BD121SN1D_300MA DPLL_VDDC
C179 DIS@10U/6.3V_8X
C3173 DIS@1U/6.3V_4X
C176 DIS@0.1U/10V_4X

(1.8V@5mA TS_VDD)
(1.8V@5mA TS_VDD)
+1.8V_GPU L20 120 ohm/300mA DIS@BLM15BD121SN1D_300MA TS_VDD
C232 DIS@10U/6.3V_8X
C214 DIS@1U/6.3V_4X
C182 DIS@0.1U/10V_4X

+1.8V_GPU
Place close to Chip
R87 DIS@499/F_4
VREFG
R84 DIS@249/F_4
C82 DIS@0.1U/10V_4X

VGA_XTALIN
VGA_XTALOUT
R151 DIS@1M/F_4
DIS@27MHZ_20
Y1
C188 DIS@27P/50V_4C
C184 DIS@27P/50V_4C

(22,32) VGA_THERMDP
(22,32) VGA_THERMDN
T36 TS_VDD

(1.8V@70mA AVDD)
(1.8V@70mA AVDD)
+1.8V_GPU
AVDD L19 120 ohm/300mA DIS@BLM15BD121SN1D_300MA
C185 DIS@0.1U/10V_4X
C211 DIS@1U/6.3V_4X
C229 DIS@10U/6.3V_8X

(1.8V@95mA VDD1DI)
(1.8V@95mA VDD1DI)
VDD1DI L22 120 ohm/300mA *DIS@BLM15BD121SN1D_300MA
C181 *DIS@0.1U/10V_4X
C210 *DIS@1U/6.3V_4X
C228 *DIS@10U/6.3V_8X

PROJECT :	LZ2C
Quanta Computer Inc.	
Size	Document Number: Seymour/Thames-M2 HOST I/F
Rev	2A
Date: Monday, January 09, 2012	Sheet 15 of 51

Seymour XT use Memory Group

16

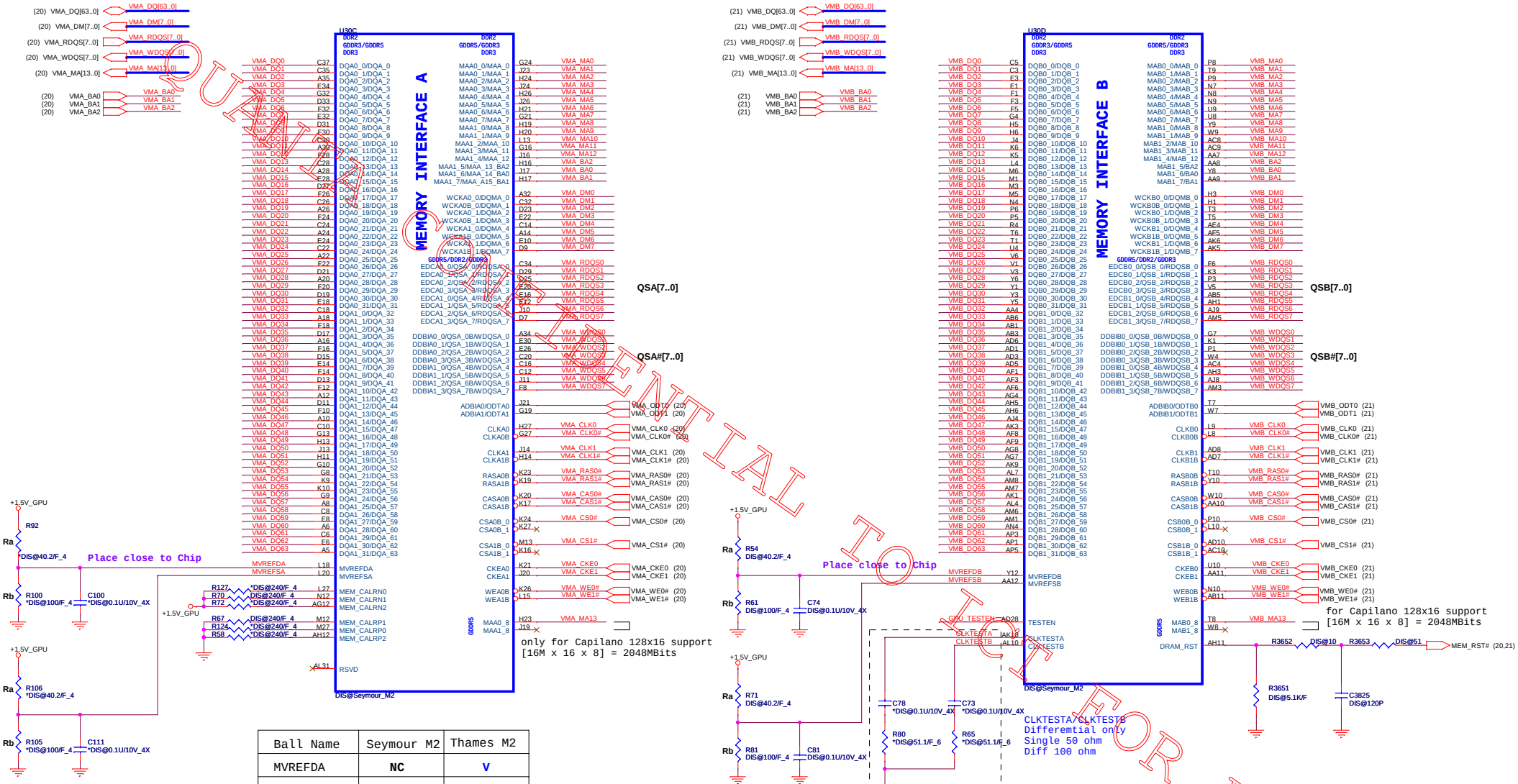

QUALITY ATTENTIAL TO CUSTOMER FOR REVIEW

Ball Name	Seymour M2	Thames M2
MVREFDA	NC	V
MVREFSA	NC	V
MVREFDB	V	V
MVREFSB	V	V
MEM_CALRN0	NC	V
MEM_CALRN1	V	V
MEM_CALRN2	NC	V
MEM_CALRP0	NC	V
MEM_CALRP1	V	V
MEM_CALRP2	NC	V

DDR3/GDDR3 Memory Stuff Option

Robson/Capilano	DDR3
MVDDQ	1.5V
Ra	40.2R
Rb	100R

TESTEN	Description
0	Internal Debug use only
1	JTAG signals enable

PROJECT : LZ2C
Quanta Computer Inc.

Size	Document Number	Rev
	Seymour/Thames-M2 MEM I/F	2A

Date: Monday, January 09, 2012 Sheet 16 of 51

Robson PRO
Capilano LP

(16,20,21,46,47) +1.5V_GPU
(15,18,22,45) +1.8V_GPU
(14,15,18,46) +1V_GPU
(14,15,16,19,22,46) +3V_GPU
(19,44) GFX_CORE
(19) +BIF_VDDC

QUANTA CONFIDENTIAL
POWER
QUANTA COMPUTER CONFIDENTIAL
FOR REVIEW

+1.5V_GPU
(1.5V@2.8A PEAK VDDR1 with MEMORY)
(1.5V@3.4A PEAK VDDR1 W/O MEMORY)
C155 DIS@10U/6.3V_8X
C126 DIS@10U/6.3V_8X
C34 DIS@10U/6.3V_8X
C38 DIS@10U/6.3V_8X
C3525 DIS@1U/6.3V_4X
C139 DIS@1U/6.3V_4X
C589 DIS@1U/6.3V_4X
C13 DIS@1U/6.3V_4X
C552 DIS@1U/6.3V_4X
C557 DIS@1U/6.3V_4X
C52 DIS@1U/6.3V_4X
C601 DIS@1U/6.3V_4X
C3087 DIS@10U/6.3V_6
C3089 DIS@10U/6.3V_6
C3090 DIS@10U/6.3V_6
C3091 DIS@10U/6.3V_6

U30E
MEM I/O
VDDR1#1 AC7
VDDR1#2 AD11
VDDR1#3 AF7
VDDR1#4 AG10
VDDR1#5 AJ7
VDDR1#6 AK8
VDDR1#7 AL9
VDDR1#8 G11
VDDR1#9 G14
VDDR1#10 G17
VDDR1#11 G20
VDDR1#12 G23
VDDR1#13 G26
VDDR1#14 G29
VDDR1#15 H10
VDDR1#16 J7
VDDR1#17 J9
VDDR1#18 K11
VDDR1#19 K13
VDDR1#20 K8
VDDR1#21 L12
VDDR1#22 L16
VDDR1#23 L21
VDDR1#24 L23
VDDR1#25 L26
VDDR1#26 L7
VDDR1#27 M11
VDDR1#28 N11
VDDR1#29 R7
VDDR1#30 R11
VDDR1#31 U17
VDDR1#32 U7
VDDR1#33 Y11
VDDR1#34 Y7

(1.8V@17mA VDD_CT)
(1.8V@17mA VDD_CT)
120 ohm/300mA
+1.8V_GPU
L26 DIS@BLM15BD121SN1D_300MA
C231 DIS@10U/6.3V_8X
C157 DIS@1U/6.3V_4X
C167 DIS@0.1U/10V_4X
VDDC_CT AF26 AF27 AG26 AG27

(3.3V@60mA VDDR3)
(3.3V@60mA VDDR3)
+3V_GPU
R119 DIS@0/J_6
C142 DIS@10U/6.3V_6X
C127 DIS@1U/6.3V_4X
C136 DIS@1U/6.3V_4X
C141 DIS@1U/6.3V_4X
VDDR3 AF23 AE24 AG23 AG24

(1.8V@170mA VDDR4)
(1.8V@170mA VDDR4)
120 ohm/300mA
+1.8V_GPU
L6 DIS@BLM15BD121SN1D_300MA
C95 DIS@1U/6.3V_4X
C94 DIS@0.1U/10V_4X
VDDR4 AF13 AE15 AG13 AG15 AD12 AE11 AF12 AG11

LEVEL TRANSLATION
VDD_CT#1 AF26
VDD_CT#2 AF27
VDD_CT#3 AG26
VDD_CT#4 AG27

I/O
VDDR3#1 AF23
VDDR3#2 AE24
VDDR3#3 AG23
VDDR3#4 AG24
VDDR4#4 AF13
VDDR4#5 AE15
VDDR4#7 AG13
VDDR4#8 AG15
VDDR4#1 AD12
VDDR4#2 AE11
VDDR4#3 AF12
VDDR4#6 AG11

T10 M20 NC_VDDRHA
T14 M21 NC_VSSRHA
T2 V12 NC_VDDRHB
T1 U12 NC_VSSRHB

(1.8V@40mA PCIE_PVDD)
(1.8V@75mA PCIE_PVDD)
120 ohm/300mA
+1.8V_GPU
L52 DIS@BLM15BD121SN1D_300MA
C645 DIS@10U/6.3V_8X
C634 DIS@1U/6.3V_4X
C635 DIS@0.1U/10V_4X
PCIE_PVDD AB37

(1.8V@75mA MPV18)
(1.8V@150mA MPV18)
MPV18 H7 MPV18#1
H8 MPV18#2

120 ohm/300mA
+1.8V_GPU
L48 DIS@BLM15BD121SN1D_300MA
C46 DIS@10U/6.3V_8X
C69 DIS@1U/6.3V_4X
C581 DIS@0.1U/10V_4X
SPV18 AM10
SPV10 AN9
AN10 SPVSS

PLL
PCIE_PVDD
SPV18
SPV10
SPVSS

VOLTAGE SENESE
(44) VGPU_CORE_SENSE VGPU_VCC_SENSE AF28 FB_VDDC
T26 AG28 FB_VDDCI
(44) VSS_GPU_SENSE VGPU_VSS_SENSE AH29 FB_GND

VGPU_VCC_SENSE and VGPU_VSS_SENSE need route as differetial pair

DIS@Seymour_M2

(1.8V@50mA SPV18)
(1.8V@50mA SPV18)
120 ohm/300mA
+1.8V_GPU
L4 DIS@BLM15BD121SN1D_300MA
C80 DIS@10U/6.3V_8X
C79 DIS@0.1U/10V_4X
SPV18

(1V@100mA SPV10)
(1V@100mA SPV10)
120 ohm/300mA
+1V_GPU
L5 DIS@BLM15BD121SN1D_300MA
C3563 DIS@10U/6.3V_8X
C65 DIS@0.1U/10V_4X
SPV10

(1.8V@400mA PCIE_VDDR)
(1.8V@440mA PCIE_VDDR)
PCIE_VDDR
180 ohm/1.5A
+1.8V_GPU
L51 DIS@HCB1608KF-181T15_1.5A
C623 DIS@1U/6.3V_4X
C614 DIS@1U/6.3V_4X
C177 DIS@1U/6.3V_4X
C166 DIS@1U/6.3V_4X
C625 DIS@10U/6.3V_8X

PCIE
PCIE_VDDR#1 AA31
PCIE_VDDR#2 AA32
PCIE_VDDR#3 AA33
PCIE_VDDR#4 AA34
PCIE_VDDR#5 V28
PCIE_VDDR#6 W29
PCIE_VDDR#7 W30
PCIE_VDDR#8 Y31

C617 DIS@0.1U/10V_4X
C178 DIS@0.1U/10V_4X
C172 DIS@1U/6.3V_4X

(1V@2A PCIE_VDDC)
(1V@1.1A PCIE_VDDC)
+PCIE_VDDC
+1V_GPU
L49 DIS@HCB1608KF-121T20
120ohm, 2A
C168 DIS@1U/6.3V_4X
C169 DIS@1U/6.3V_4X
C619 DIS@1U/6.3V_4X
C171 DIS@1U/6.3V_4X
C613 DIS@1U/6.3V_4X
C159 DIS@10U/6.3V_6X
C622 DIS@1U/6.3V_4X
C160 DIS@1U/6.3V_4X

PCIE_VDDC#1 G30
PCIE_VDDC#2 G31
PCIE_VDDC#3 H29
PCIE_VDDC#4 H30
PCIE_VDDC#5 J29
PCIE_VDDC#6 J30
PCIE_VDDC#7 L28
PCIE_VDDC#8 M28
PCIE_VDDC#9 N28
PCIE_VDDC#10 R28
PCIE_VDDC#11 T28
PCIE_VDDC#12 U28

GFX_CORE
(30A or more)
CORE
VDDC#1 AA15
VDDC#2 AA17
VDDC#3 AA20
VDDC#4 AA22
VDDC#5 AA24
VDDC#6 AA27
VDDC#7 AB16
VDDC#8 AB18
VDDC#9 AB21
VDDC#10 AB23
VDDC#11 AB26
VDDC#12 AB28
VDDC#13 AC17
VDDC#14 AC20
VDDC#15 AC22
VDDC#16 AC24
VDDC#17 AC27
VDDC#18 AD18
VDDC#19 AD21
VDDC#20 AD23
VDDC#21 AD26
VDDC#22 AE17
VDDC#23 AE20
VDDC#24 AE22
VDDC#25 AG16
VDDC#26 AG17
VDDC#27 AH26
VDDC#28 AH27
VDDC#29 AH28
VDDC#30 M26
VDDC#31 M28
VDDC#32 N24
VDDC#33 N27
VDDC#34 R18
VDDC#35 R21
VDDC#36 R23
VDDC#37 R26
VDDC#38 T17
VDDC#39 T20
VDDC#40 T22
VDDC#41 T24
VDDC#42 T27
VDDC#43 U16
VDDC#44 U18
VDDC#45 U21
VDDC#46 U23
VDDC#47 U26
VDDC#48 V17
VDDC#49 V20
VDDC#50 V22
VDDC#51 V24
VDDC#52 V27
VDDC#53 Y16
VDDC#54 Y18
VDDC#55 Y21
VDDC#56 Y23
VDDC#57 Y26
VDDC#58 Y28

C150 DIS@1U/6.3V_4X
C124 DIS@1U/6.3V_4X
C109 DIS@1U/6.3V_4X
C131 DIS@1U/6.3V_4X
C93 DIS@1U/6.3V_4X
C116 DIS@1U/6.3V_4X

(VDDCI + VDDC)@0.95V/8.5A PEAK
(VDDCI + VDDC)@1V/33.8A PEAK

C92 DIS@1U/6.3V_4X
C130 DIS@1U/6.3V_4X
C101 DIS@1U/6.3V_4X
C98 DIS@1U/6.3V_4X
C103 DIS@1U/6.3V_4X
C164 DIS@1U/6.3V_4X
C107 DIS@1U/6.3V_4X
+BIF_VDDC
+BIF_VDDC
C200 DIS@1U/6.3V_4X
C165 DIS@1U/6.3V_4X
C152 DIS@1U/6.3V_4X
C153 DIS@1U/6.3V_4X
C148 DIS@1U/6.3V_4X
C123 DIS@1U/6.3V_4X
C147 DIS@1U/6.3V_4X
C88 DIS@10U/6.3V_8X
C114 DIS@10U/6.3V_8X
C83 DIS@10U/6.3V_8X
C61 DIS@10U/6.3V_8X
C51 DIS@10U/6.3V_8X

GFX_CORE
VDDCI#1 AA13
VDDCI#2 AB13
VDDCI#3 AC12
VDDCI#4 AC15
VDDCI#5 AD13
VDDCI#6 AD16
VDDCI#7 M15
VDDCI#8 M16
VDDCI#9 M18
VDDCI#10 M23
VDDCI#11 N13
VDDCI#12 N15
VDDCI#13 N17
VDDCI#14 N20
VDDCI#15 N22
VDDCI#16 R12
VDDCI#17 R13
VDDCI#18 R16
VDDCI#19 T12
VDDCI#20 T15
VDDCI#21 V15
VDDCI#22 V13

ISOLATED CORE I/O

C138 DIS@1U/6.3V_4X
C84 DIS@1U/6.3V_4X
C104 DIS@1U/6.3V_4X
C149 DIS@1U/6.3V_4X
C146 DIS@1U/6.3V_4X
C91 DIS@1U/6.3V_4X
C57 DIS@10U/6.3V_8X
C122 DIS@10U/6.3V_8X
C70 DIS@10U/6.3V_8X
C86 DIS@1U/6.3V_4X
C135 DIS@1U/6.3V_4X
C105 DIS@1U/6.3V_4X
C87 DIS@1U/6.3V_4X

U30F
PCIE_VSS#1 AB30
PCIE_VSS#2 E39
PCIE_VSS#3 F34
PCIE_VSS#4 F39
PCIE_VSS#5 G33
PCIE_VSS#6 G34
PCIE_VSS#7 H31
PCIE_VSS#8 H34
PCIE_VSS#9 H39
PCIE_VSS#10 J31
PCIE_VSS#11 J34
PCIE_VSS#12 K31
PCIE_VSS#13 K34
PCIE_VSS#14 K39
PCIE_VSS#15 L31
PCIE_VSS#16 L34
PCIE_VSS#17 M34
PCIE_VSS#18 M39
PCIE_VSS#19 N31
PCIE_VSS#20 N34
PCIE_VSS#21 P31
PCIE_VSS#22 P34
PCIE_VSS#23 P39
PCIE_VSS#24 R34
PCIE_VSS#25 T31
PCIE_VSS#26 T34
PCIE_VSS#27 T39
PCIE_VSS#28 U31
PCIE_VSS#29 U34
PCIE_VSS#30 V34
PCIE_VSS#31 V39
PCIE_VSS#32 W31
PCIE_VSS#33 W34
PCIE_VSS#34 Y34
PCIE_VSS#35 Y39

GND
GND#100 F15
GND#101 F17
GND#102 F19
GND#103 F21
GND#104 F23
GND#105 F25
GND#106 F27
GND#107 F29
GND#108 F31
GND#109 F33
GND#110 F7
GND#111 F9
GND#112 G2
GND#113 G6
GND#114 H9
GND#115 J2
GND#116 J27
GND#117 J6
GND#118 J8
GND#119 K14
GND#120 K7
GND#121 L11
GND#122 L17
GND#123 L2
GND#124 L22
GND#125 L24
GND#126 L6
GND#127 M17
GND#128 M22
GND#129 M24
GND#130 N16
GND#131 N18
GND#132 N2
GND#133 N21
GND#134 N23
GND#135 N26
GND#136 N6
GND#137 R15
GND#138 R17
GND#139 R2
GND#140 R20
GND#141 R22
GND#142 R24
GND#143 R27
GND#144 R6
GND#145 T11
GND#146 T13
GND#147 T16
GND#148 T18
GND#149 T21
GND#150 T23
GND#151 T26
GND#153 U15
GND#154 U17
GND#155 U2
GND#156 U20
GND#157 U22
GND#158 U24
GND#159 U27
GND#160 U6
GND#161 V11
GND#163 V16
GND#164 V18
GND#165 V21
GND#166 V23
GND#167 V26
GND#168 W2
GND#169 W6
GND#170 Y15
GND#171 Y17
GND#172 Y20
GND#173 Y22
GND#174 Y24
GND#175 Y27
GND#192 U13
GND#193 V13

VSS_MECH#1 A39
VSS_MECH#2 AW1
VSS_MECH#3 AW38

R8 S@0/J_4
R29 S@0/J_4
DIS@Seymour_M2

GND#1 A3
GND#2 A37
GND#3 AA16
GND#4 AA18
GND#5 AA2
GND#6 AA21
GND#7 AA23
GND#8 AA26
GND#9 AA28
GND#10 AA6
GND#11 AB12
GND#12 AB15
GND#13 AB17
GND#14 AB20
GND#15 AB22
GND#16 AB24
GND#17 AB27
GND#18 AC11
GND#19 AC13
GND#20 AC16
GND#21 AC18
GND#22 AC2
GND#23 AC21
GND#24 AC23
GND#25 AC26
GND#26 AC28
GND#27 AC6
GND#28 AD15
GND#29 AD17
GND#30 AD20
GND#31 AD22
GND#32 AD24
GND#33 AD27
GND#34 AD9
GND#35 AE2
GND#36 AE6
GND#37 AF10
GND#38 AF16
GND#39 AF18
GND#40 AF21
GND#41 AG17
GND#42 AG2
GND#43 AG20
GND#44 AG22
GND#45 AG6
GND#46 AG9
GND#47 AH21
GND#48 AJ10
GND#49 AJ11
GND#50 AJ2
GND#51 AJ28
GND#52 AJ6
GND#53 AK31
GND#54 AK7
GND#55 AL11
GND#56 AL14
GND#57 AL17
GND#58 AL2
GND#59 AL20
GND#60 AL21
GND#61 AL23
GND#62 AL26
GND#63 AL32
GND#64 AL6
GND#65 AL8
GND#66 AM11
GND#67 AM31
GND#68 AM9
GND#69 AN11
GND#70 AN2
GND#71 AN30
GND#72 AN6
GND#73 AN8
GND#74 AP11
GND#75 AP7
GND#76 AP9
GND#77 AR5
GND#78 AW34
GND#79 B11
GND#80 B13
GND#81 B15
GND#82 B17
GND#83 B19
GND#84 B21
GND#85 B23
GND#86 B25
GND#87 B27
GND#88 B29
GND#89 B31
GND#90 B33
GND#91 B7
GND#92 B9
GND#93 C1
GND#94 C39
GND#95 E35
GND#96 E5
GND#97 F11
GND#98 F13
GND#99

Robson had BACO support and Capilano didn't .
If not used, can be disconnected. (AL21 pin)

PX_EN = LOW, turn on
PX_EN = HIGH, turn off

PX_EN
PX_EN (19)

PROJECT : LZ2C
Quanta Computer Inc.
Size
Document Number
Seymour/Thames-M2 PWR_GND
Rev 2A
Date: Monday, January 09, 2012
Sheet 17 of 51

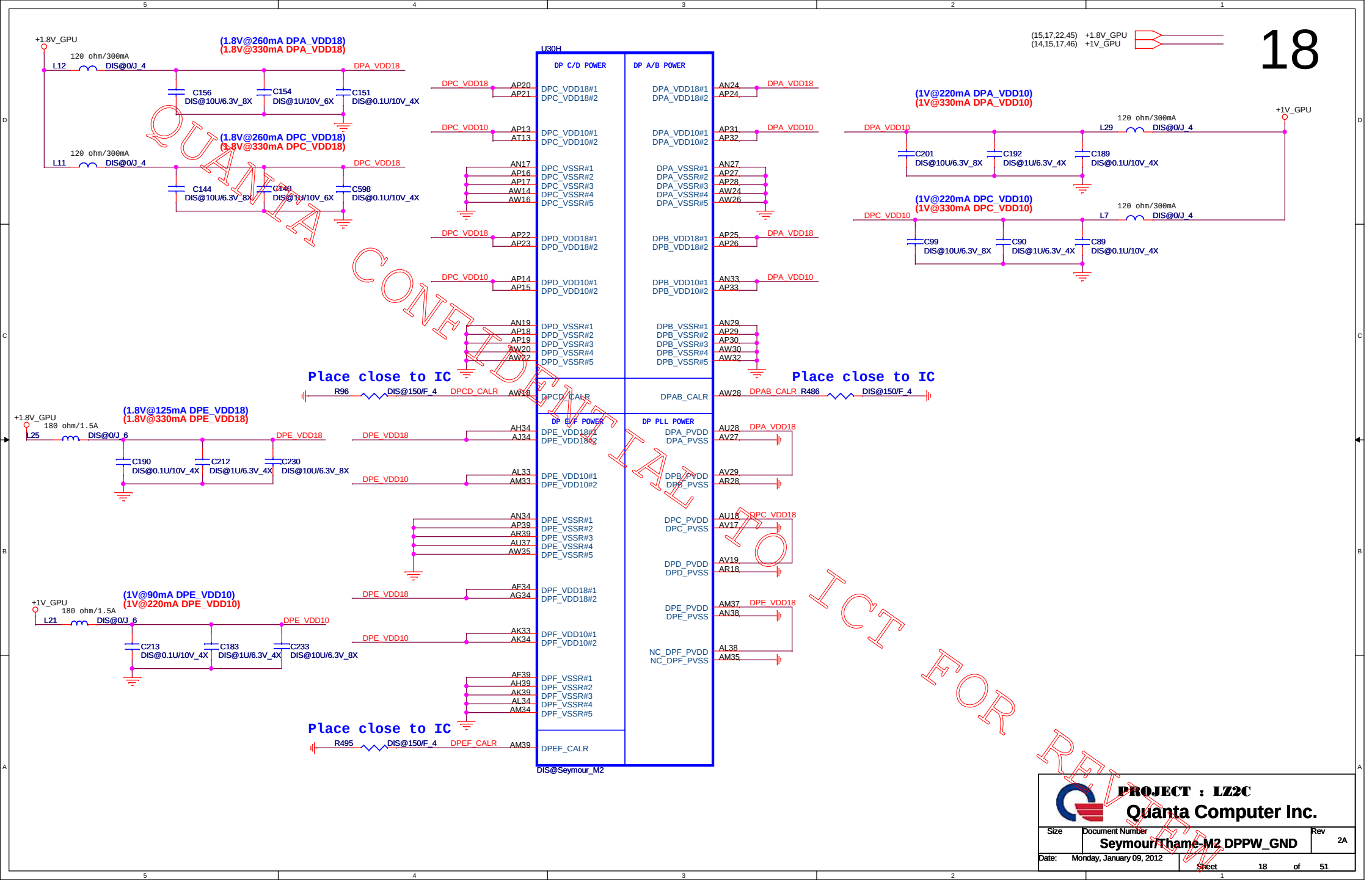
18
(15,17,22,45) +1.8V_GPU
(14,15,17,46) +1V_GPU
U30H
DP C/D POWER
DP A/B POWER
DP E/F POWER
DP PLL POWER
DPC_VDD18#1
DPC_VDD18#2
DPC_VDD10#1
DPC_VDD10#2
DPC_VSSR#1
DPC_VSSR#2
DPC_VSSR#3
DPC_VSSR#4
DPC_VSSR#5
DPD_VDD18#1
DPD_VDD18#2
DPD_VDD10#1
DPD_VDD10#2
DPD_VSSR#1
DPD_VSSR#2
DPD_VSSR#3
DPD_VSSR#4
DPD_VSSR#5
DPCD_CALR
DPA_VDD18#1
DPA_VDD18#2
DPA_VDD10#1
DPA_VDD10#2
DPA_VSSR#1
DPA_VSSR#2
DPA_VSSR#3
DPA_VSSR#4
DPA_VSSR#5
DPB_VDD18#1
DPB_VDD18#2
DPB_VDD10#1
DPB_VDD10#2
DPB_VSSR#1
DPB_VSSR#2
DPB_VSSR#3
DPB_VSSR#4
DPB_VSSR#5
DPAB_CALR
DPE_VDD18#1
DPE_VDD18#2
DPE_VDD10#1
DPE_VDD10#2
DPE_VSSR#1
DPE_VSSR#2
DPE_VSSR#3
DPE_VSSR#4
DPE_VSSR#5
DPF_VDD18#1
DPF_VDD18#2
DPF_VDD10#1
DPF_VDD10#2
DPF_VSSR#1
DPF_VSSR#2
DPF_VSSR#3
DPF_VSSR#4
DPF_VSSR#5
DPEF_CALR
DPA_PVDD
DPA_PVSS
DPB_PVDD
DPB_PVSS
DPC_PVDD
DPC_PVSS
DPD_PVDD
DPD_PVSS
DPE_PVDD
DPE_PVSS
NC_DPF_PVDD
NC_DPF_PVSS
DIS@Seymour_M2
+1.8V_GPU
120 ohm/300mA
L12 DIS@0/J_4
DPA_VDD18
C156 DIS@10U/6.3V_8X
C154 DIS@1U/10V_6X
C151 DIS@0.1U/10V_4X
(1.8V@260mA DPA_VDD18)
(1.8V@330mA DPA_VDD18)
L11 DIS@0/J_4
DPC_VDD18
C144 DIS@10U/6.3V_8X
C140 DIS@1U/10V_6X
C598 DIS@0.1U/10V_4X
(1.8V@260mA DPC_VDD18)
(1.8V@330mA DPC_VDD18)
DPC_VDD18
DPC_VDD10
DPA_VDD18
DPA_VDD10
(1V@220mA DPA_VDD10)
(1V@330mA DPA_VDD10)
+1V_GPU
L29 DIS@0/J_4
C201 DIS@10U/6.3V_8X
C192 DIS@1U/6.3V_4X
C189 DIS@0.1U/10V_4X
(1V@220mA DPC_VDD10)
(1V@330mA DPC_VDD10)
L7 DIS@0/J_4
C99 DIS@10U/6.3V_8X
C90 DIS@1U/6.3V_4X
C89 DIS@0.1U/10V_4X
Place close to IC
R96 DIS@150/F_4
R486 DIS@150/F_4
(1.8V@125mA DPE_VDD18)
(1.8V@330mA DPE_VDD18)
L25 DIS@0/J_6
DPE_VDD18
DPE_VDD10
C190 DIS@0.1U/10V_4X
C212 DIS@1U/6.3V_4X
C230 DIS@10U/6.3V_8X
(1V@90mA DPE_VDD10)
(1V@220mA DPE_VDD10)
L21 DIS@0/J_6
C213 DIS@0.1U/10V_4X
C183 DIS@1U/6.3V_4X
C233 DIS@10U/6.3V_8X
R495 DIS@150/F_4
QUANTA CONFIDENTIAL
NOT FOR REVIEW
PROJECT : LZ2C
Quanta Computer Inc.
Size
Document Number
Seymour/Thame-M2 DPPW_GND
Rev
2A
Date: Monday, January 09, 2012
Sheet 18 of 51

EC-B-08

(4,7,8,9,10,11,12,13,23,25,26,27,28,29,30,32,33,34,35,37,40,41,42,43,44,45,46,47) +3V
(9,23,24,25,28,29,32,33,37,47) +5V
(17) +PCIE_VDDC
(14,15,16,17,22,46) +3V_GPU
(17,44) GFX_CORE

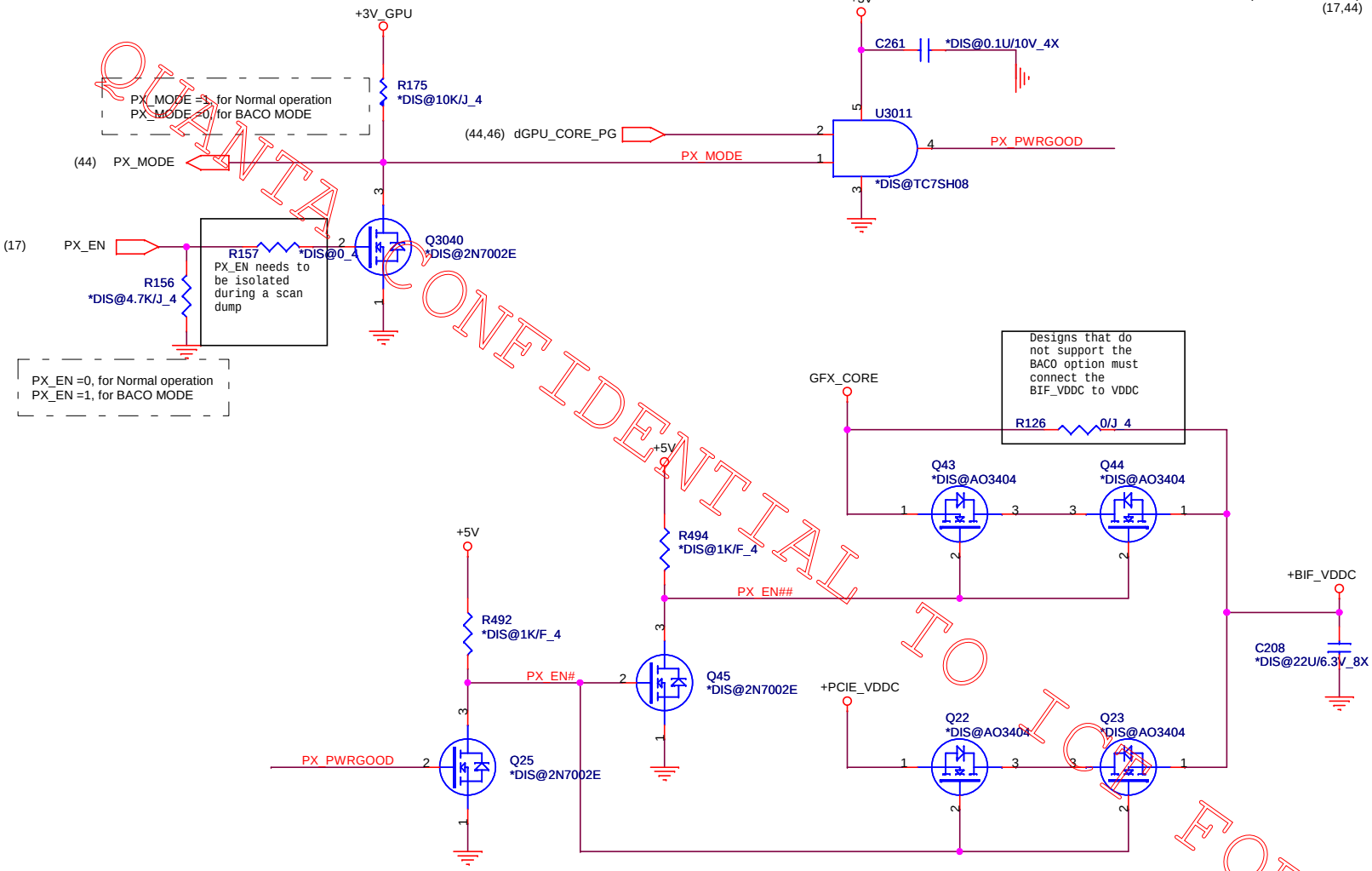

QUANTA CONFIDENTIAL TO LOCK FOR REVIEW

PROJECT : LZ2C
Quanta Computer Inc.

Size	Document Number	Rev
	Seymour -M2 BACO	2A

Date: Monday, January 09, 2012 Sheet 19 of 51

CHANNEL A: 512MB DDR3 (64M*16*4pcs)

CONFIDENTIAL
Intel Confidential
PREVIEW

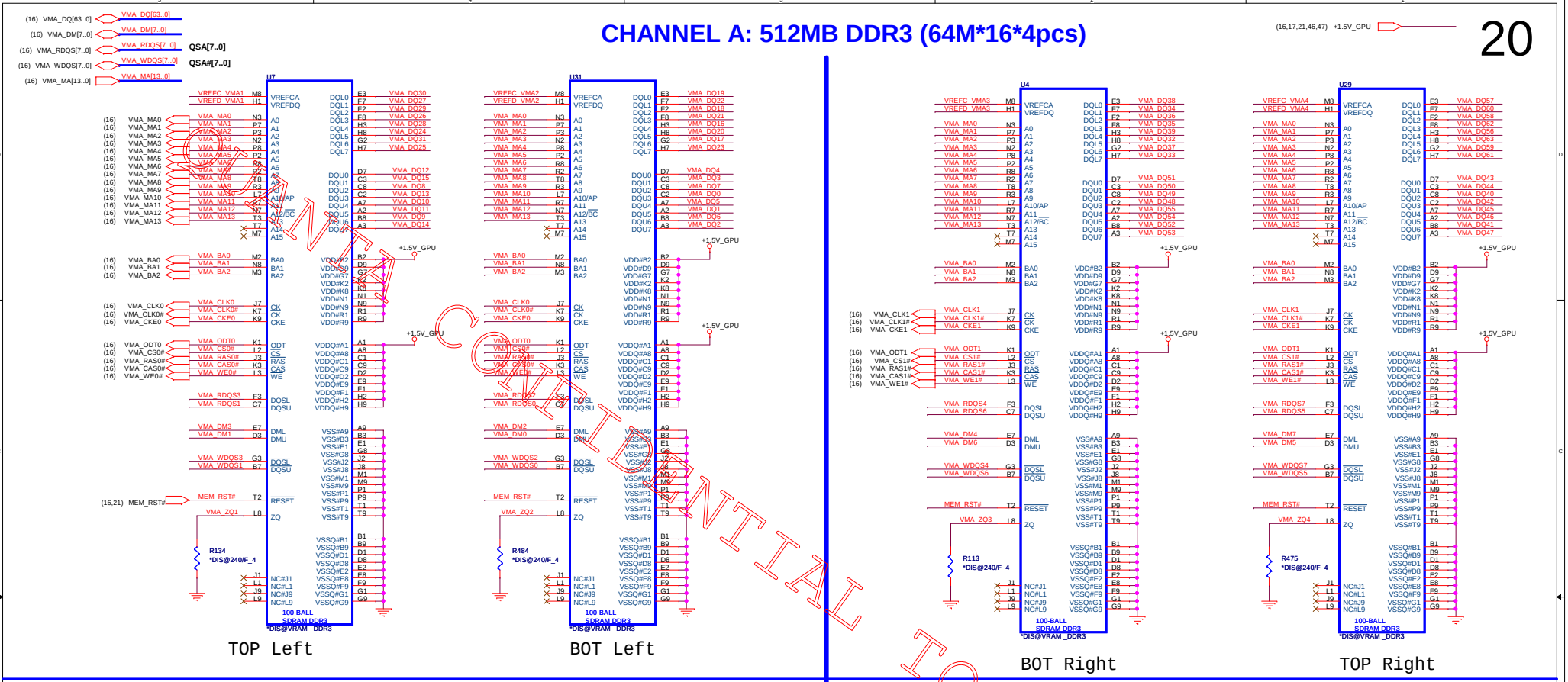

Group-A0 VREF

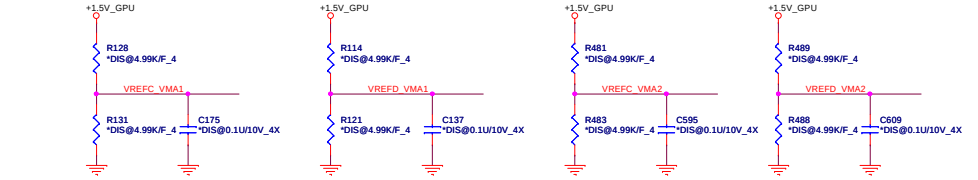

Group-A1 VREF

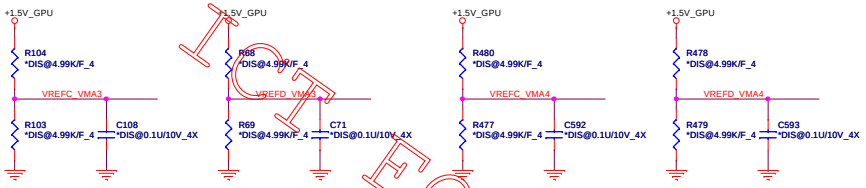

MEM_A0 CLK

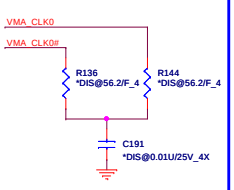

Group-A0 decoupling CAP

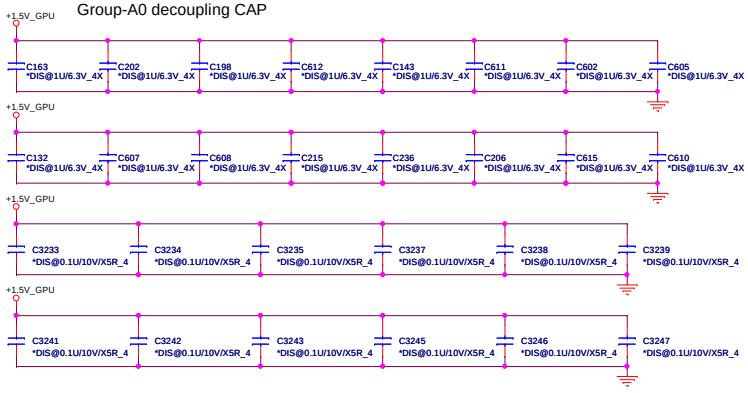

Group-A1 decoupling CAP

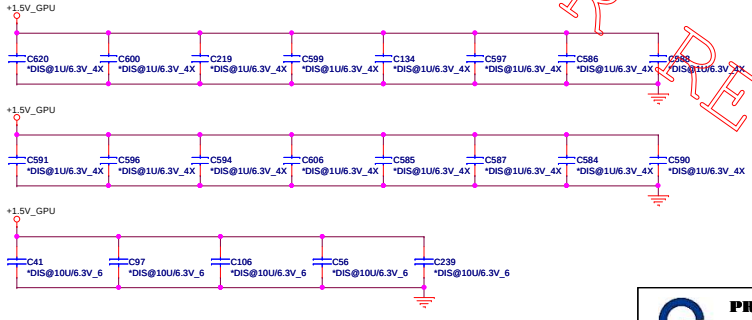

MEM_A1 CLK

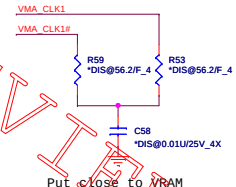

PROJECT : LZ2C			
Quanta Computer Inc.			
Size	Document Number		Rev
	VRAM_A:DDR3		2A
Date: Monday, January 09, 2012		Sheet 20 of 51	

CHANNEL B: 512MB DDR3 (64M*16*4pcs)

Seymour choose channel B

21

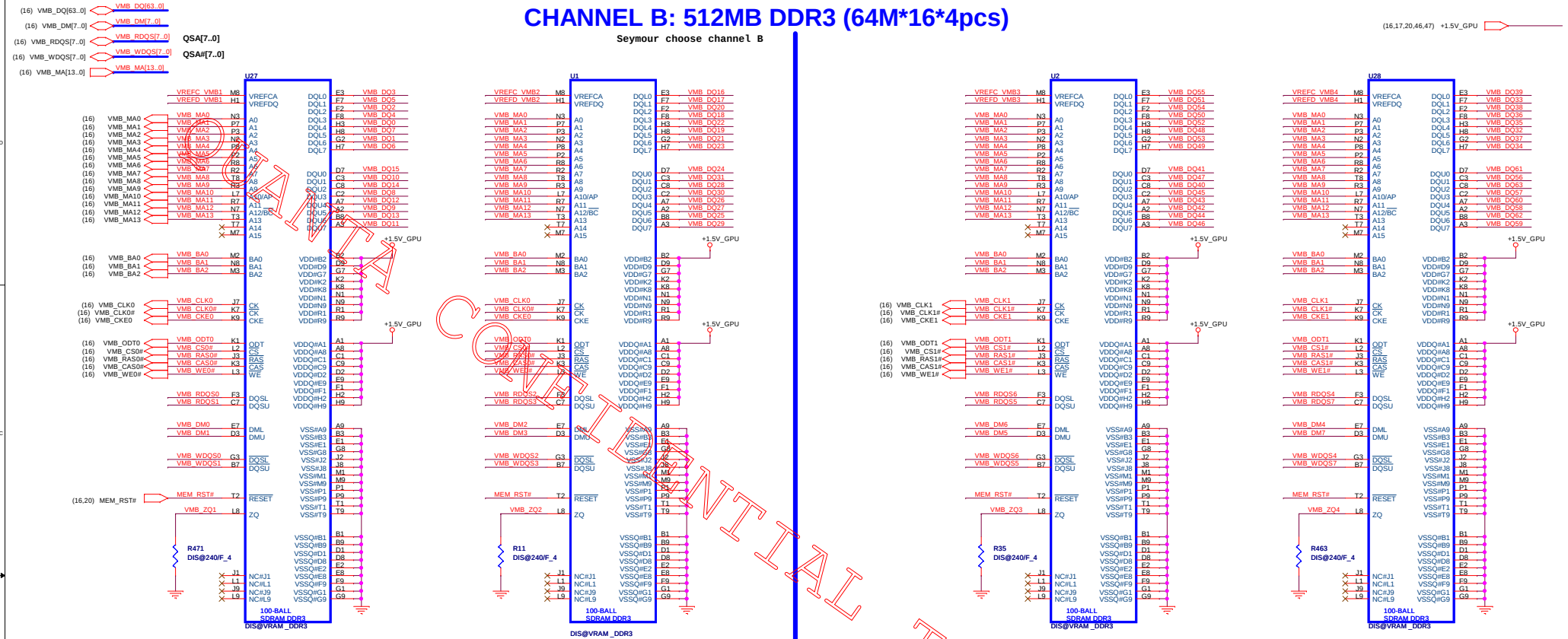

CONFIDENTIAL
For Review

Group-B0 VREF

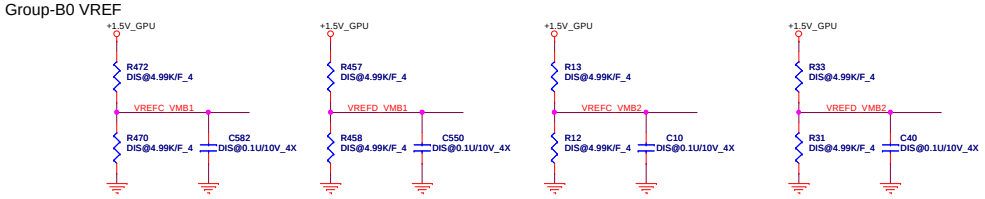

Group-B1 VREF

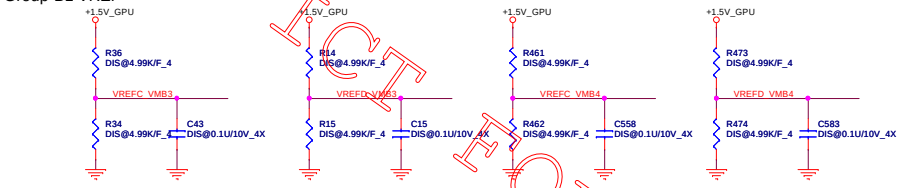

MEM_B0 CLK

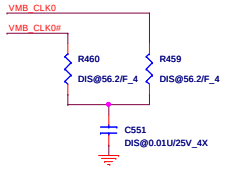

Put close to VRAM

Group-B0 decoupling CAP

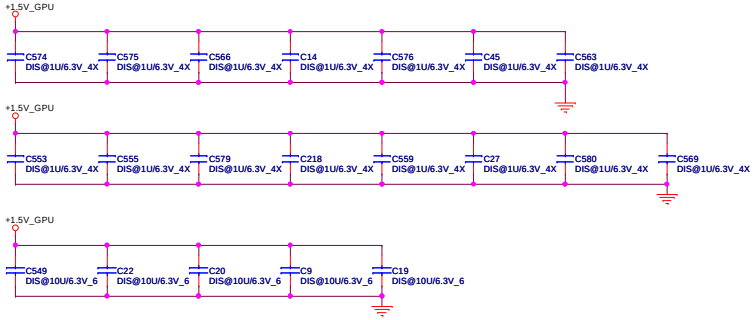

Group-B1 decoupling CAP

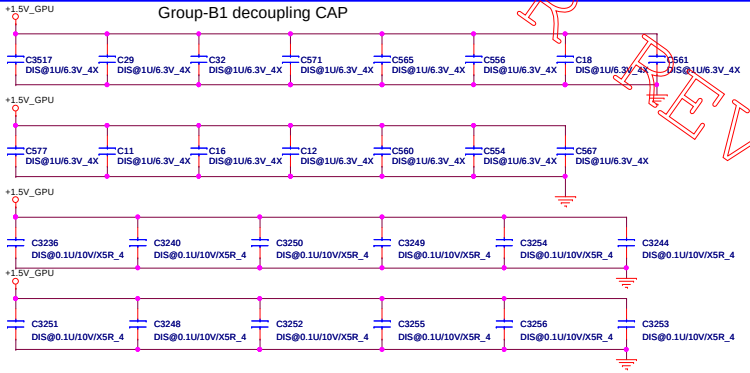

MEM_B1 CLK

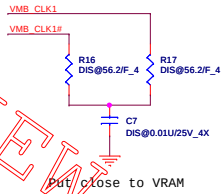

Put close to VRAM

PROJECT : LZ2C

Quanta Computer Inc.

Size	Document Number	Rev
	VRAM_B: DDR3-64M*16*4PCS	2A
Date: Monday, January 09, 2012	Sheet 21 of 51	

PIN STRAPS

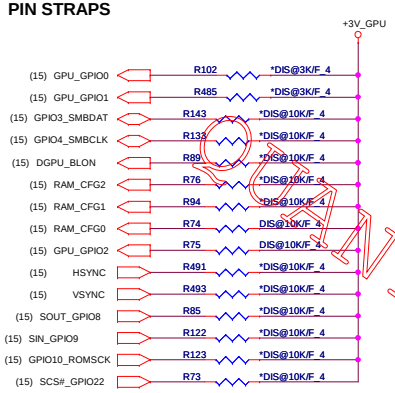

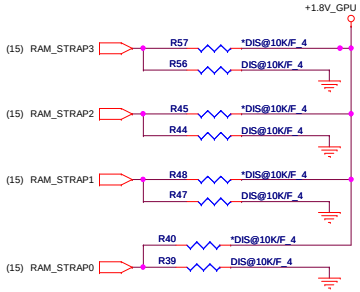

Memory Aperture size	
RAM_CFG[2:0]	Size
000	128MB
001	256MB
010	64MB
011	32MB

ROM Table		
HSYNC	VSYNC	Discription
0	0	No Audio
0	1	Any one by dectec
1	0	DP only
1	1	Both DP & HDMI

VRAM Memory TYPE

Vendor	Vendor P/N	STN B/S P/N	Size	RAM_STRAP3 DVPDATA_3	RAM_STRAP2 DVPDATA_2	RAM_STRAP1 DVPDATA_1	RAM_STRAP0 DVPDATA_0
Hynix	H5TQ1G63DFR-11C	AKD5LZWTW02 (64M*16-1Gb)	1GB	0	0	1	0
	H5TQ2G63BFR-11C	AKD5MGWTW00 (128M*16-1Gb)	2GB	0	0	0	0
	H5TQ2G63DFR-11C	AKD5MGWTW16 (128M*16-1Gb)	2GB	0	1	0	0
Samsung	K4W1G1646G-BC11	AKD5EGGT500 (64M*16-1Gb)	1GB	0	0	1	1
	K4W2G1646C-HC11	AKD5MGWT500 (128M*16-1Gb)	2GB	0	0	0	1

CONFIGURATION STRAPS

ALLOW FOR PULLUP PADS FOR THESE STRAPS AND IF THESE GPIOS ARE USED, THEY MUST NOT CONFLICT DURING RESET

STRAPS	PIN	DESCRIPTION OF DEFAULT SETTINGS	DEFAULT	REMARK
TX_PWRS_ENB	GPIO0	0 = 50% TX OUTPUT SWING 1 = FULL TX OUTPUT SWING	0	
TX_DEEMPH_EN	GPIO1	PCIE TRANSMITTER DE-EMPHASIS ENABLED 0 = TX DE-EMPHASIS DISABLED 1 = TX DE-EMPHASIS ENABLED	0	
BIOS_ROM_EN	GPIO_22_ROMCSB	ENABLE EXTERNAL BIOS ROM (Only for GDDR5) 0 = DISABLE 1 = ENABLE	0	
ROMIDCFG(2:0)	GPIO[13:11]	SERIAL ROM TYPE OR MEMORY APERTURE SIZE SELECT NUMONYX M25P10A : 101	000	See ROM table
BIF_GEN2_EN_A	GPIO2	0 = PCIE DEVICE AS 2.5GT/S CAPABLE 1 = PCIE DEVICE AS 5GT/S CAPABLE	1	
GPIO_8_ROMSO H2SYNC GPIO_21_BB_EN	GPIO8 H2SYNC GPIO21	Reserved Only	0	
AUD[1] AUD[0]	HSYNC VSYNC	AUD[1:0] 00: NO AUDIO FUNCTION. 01: AUDIO FOR DISPLAYPORT AND HDMI IF ADAPTER IS DETECTED. 10: AUDIO FOR DISPLAYPORT ONLY. 11: AUDIO FOR BOTH DISPLAYPORT AND HDMI.	11	See Audio table
GPIO_9_ROMSI	GPIO9	0 = VGA controller capacity enable	0	
VIP_DEVICE_STRAP_ENA VIP: Video Capture Port Interface	V2SYNC	0 = DRIVER would ignore the value sample on VHAD_0 during RESET.	0	

Thermal Sensor

EC-A-22

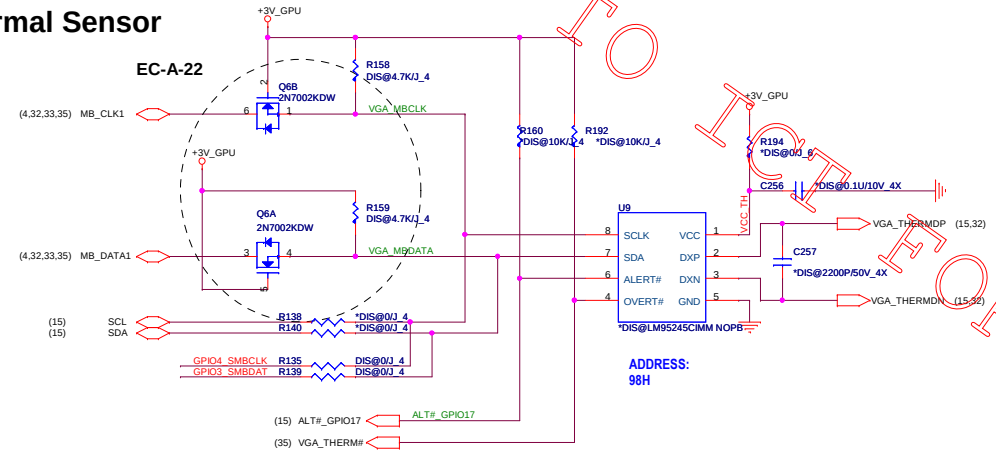

CONFIDENTIAL
NOTICE OF REVIEW

PROJECT : LZ2C
Quanta Computer Inc.

Size	Document Number	Rev
	Memory strip/Thermal	2A

Date: Monday, January 09, 2012 Sheet 22 of 51

(4,6,25,30,41,43) +1.5V
(9,19,24,25,28,29,32,33,37,47) +5V
(4,7,8,9,10,11,12,13,19,25,26,27,28,29,30,32,33,34,35,37,40,41,42,43,44,45,46,47) +3V

QUANTA CONFIDENTIAL
PROPRIETARY
FOR REVIEW

HDMI HPD SENSE

EC-A-22

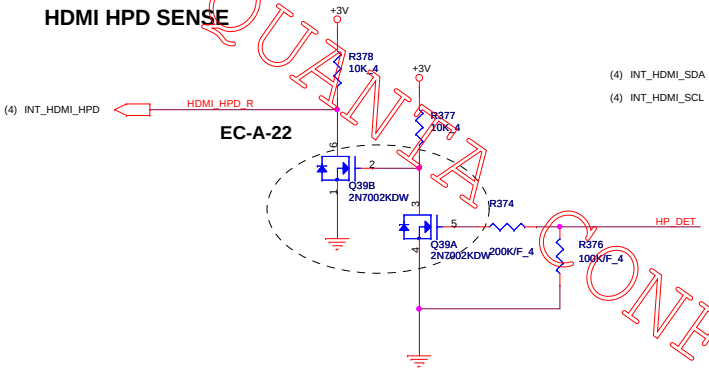

EC-A-08

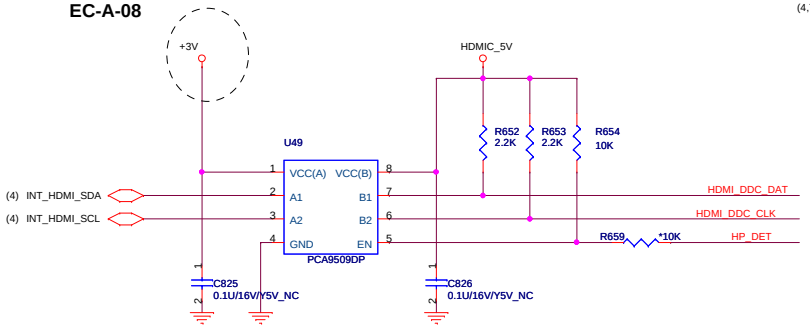

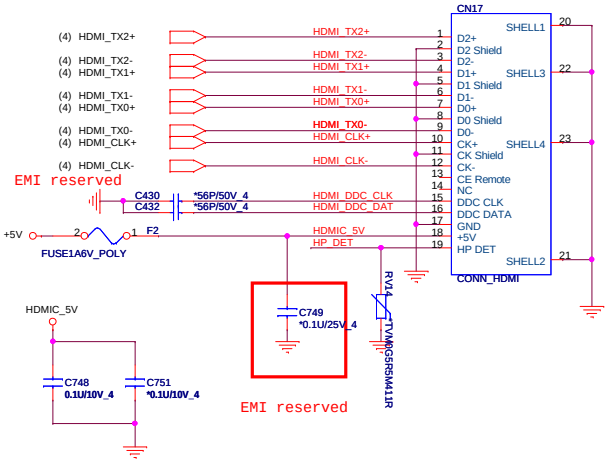

EC-B-04

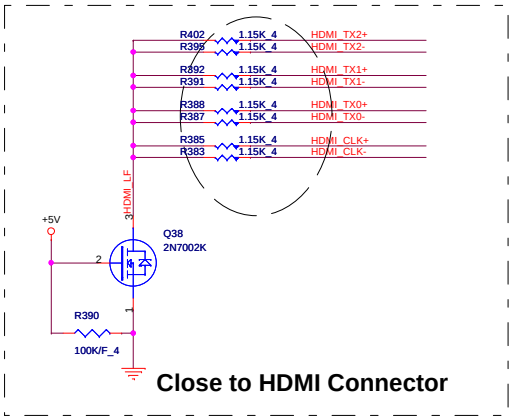

For ESD

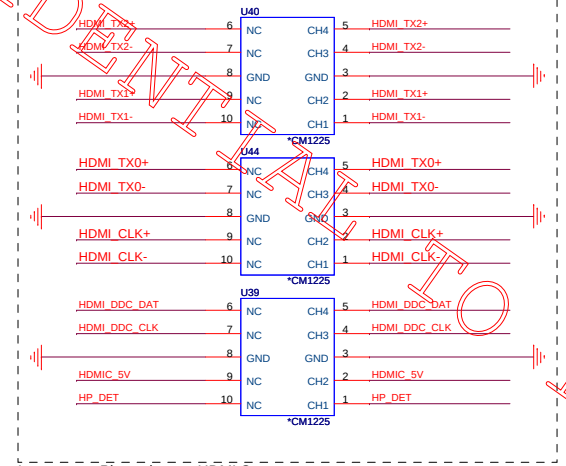

Layout note:Place close to HDMI Conn

EMI reserve for HDMI

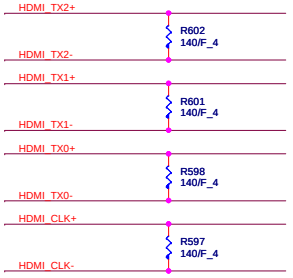

PROJECT : LZ2C		
Quanta Computer Inc.		
Size: Custom	Document Number: HDMI CONN	Rev: 2A
Date: Monday, January 09, 2012	Sheet 23 of 51	

(9,19,23,25,28,29,32,33,37,47) +5V
(4,7,8,9,10,11,12,13,19,23,25,26,27,28,29,30,32,33,34,35,37,40,41,42,43,44,45,46,47) +3V

QUANTA CONFIDENTIAL
FOR ICT REVIEW

Layout Note:
Setting R,G,B trace impedance to 50 ohm.

CRT_VCC
D29 RB500V-40
C692 0.1U/10V/X5R_4
+5V
F1 FUSE1A6V_POLY
CRT_VCC_R
C303 0.1U/10V/X5R_4

(9) INT_CRT_RED
(9) INT_CRT_GRE
(9) INT_CRT_BLU
L38 BLM15BA470SS1D
L36 BLM15BA470SS1D
L33 BLM15BA470SS1D
CRT_R1
CRT_G1
CRT_B1
R262 150/F_4
R253 150/F_4
R246 150/F_4
C327 5.6P/50V/COG_4
C324 5.6P/50V/COG_4
C320 5.6P/50V/COG_4
C315 5.6P/50V/COG_4
C323 5.6P/50V/COG_4
C333 5.6P/50V/COG_4
TP7
CN13 CRT_CONN

ESD PROTECTION

U11
CRT_R1 CRT_G1 CRT_B1 CRT_VCC_R CRT_VCC
*AZC199-04S.R7G

U18
CRTVSYNC CRTHSYNC DDCCLK DDCDAT
*AZC199-04S.R7G

+5V
(9) INT_CRT_VSYNC
(9) INT_CRT_HSYNC
U13 74AHCT1G125GW
U14 74AHCT1G125GW
C318 0.1U/10V/X5R_4
VGAVSYNC_R
VGAHSYNC_R
R219 10_4
R232 10_4
CRTVSYNC1
CRTHSYNC1

Place near
U37,U38 < 200 mil

L30 BLM18AG121SN1D(120,200MA)
L32 BLM18AG121SN1D(120,200MA)
CRTVSYNC
CRTHSYNC
C308 *10P/50V/COG_4
C282 *10P/50V/COG_4
C309 10P/50V/COG_4
C281 10P/50V/COG_4

Place near CN5002 connector
< 200 mil

(9) INT_DDCCLK
(9) INT_DDCDAT
DDCCLK
DDCDAT
C685 *10P/50V/COG_4
C665 *10P/50V/COG_4

PROJECT : LZ2C
Quanta Computer Inc.

Size	Document Number	Rev
Custom	CRT CONN	2A
Date: Monday, January 09, 2012	Sheet 24 of 51	

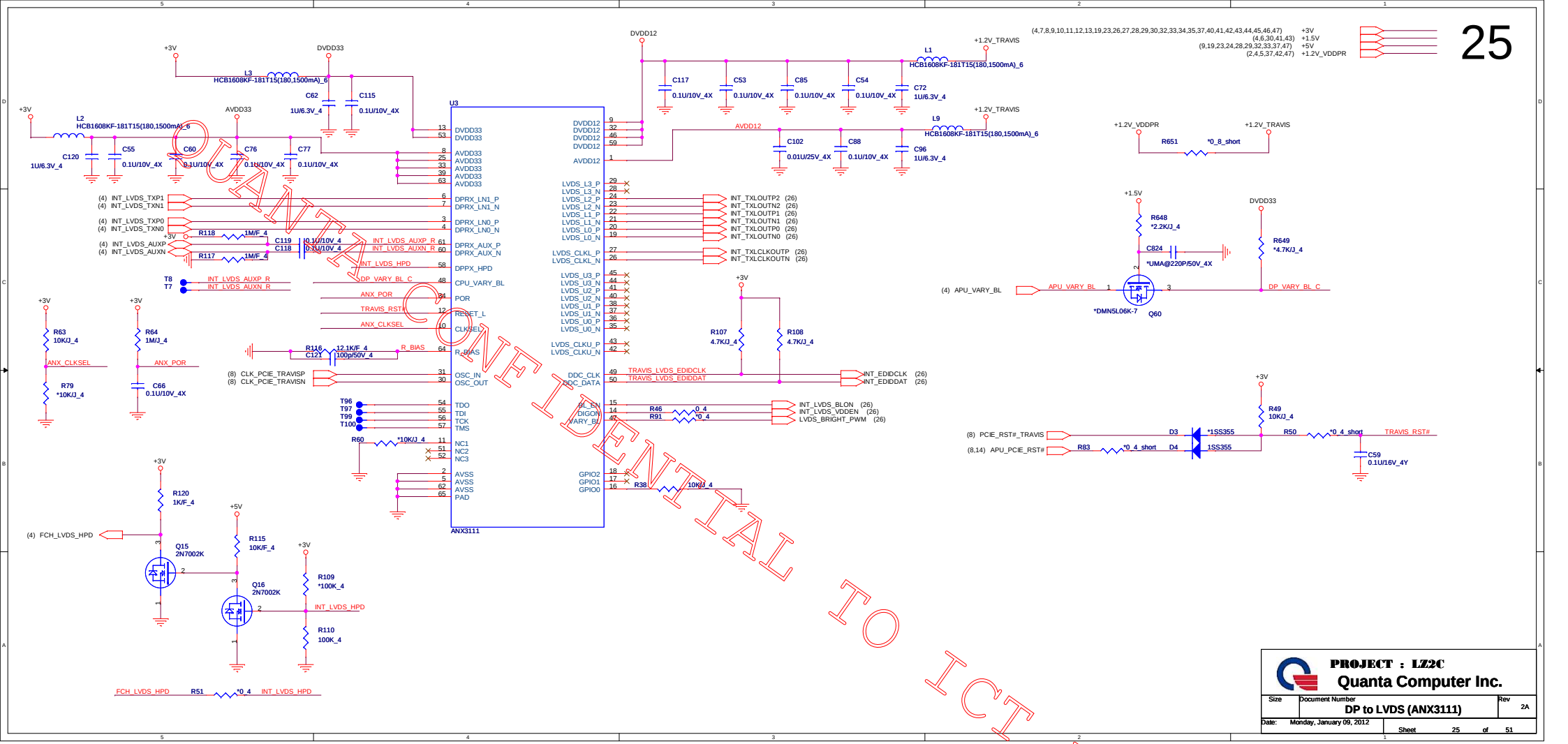

CONFIDENTIAL TO ICT FOR REVIEW

(4,7,8,9,10,11,12,13,19,23,25,27,28,29,30,32,33,34,35,37,40,41,42,43,44,45,46,47) +3V
(10,29,33,37,39,41,46) +15V
(31,34,37,47) +5V_S5
(8,10,27,29,34,35,37,38,39,42,45,46) +3VPCU

QUANTA CONFIDENTIAL
NOT FOR REVIEW

LCDVCC

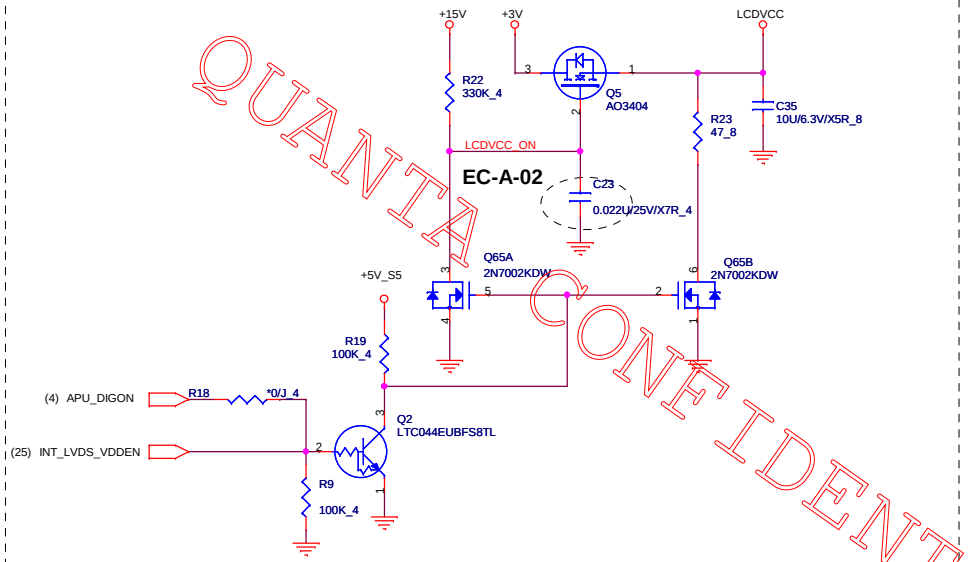

EC-A-21

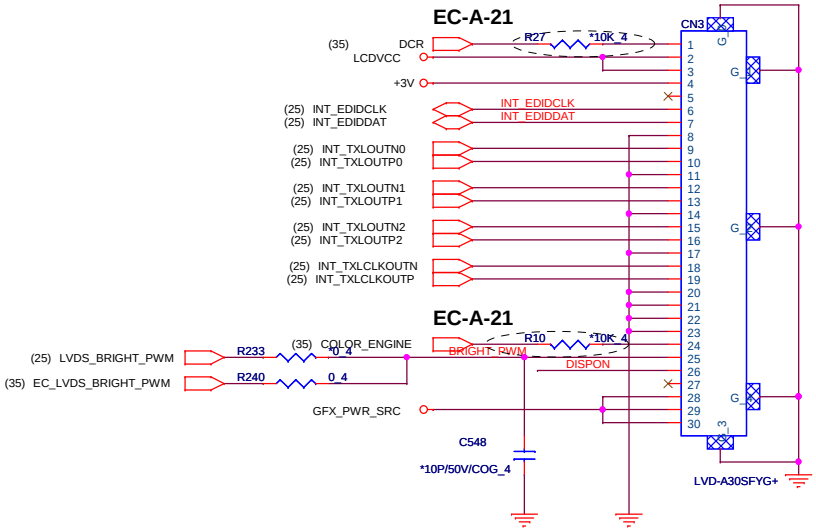

back light

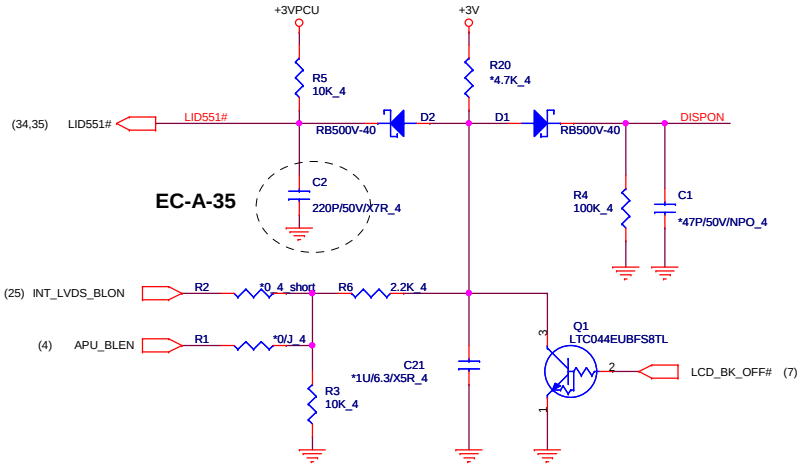

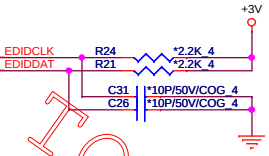

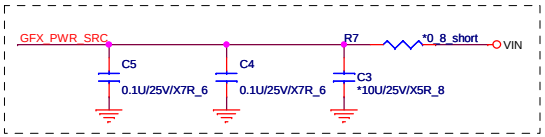

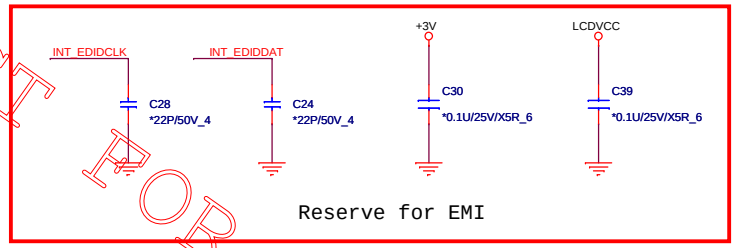

PROJECT : LZ2C
Quanta Computer Inc.

Size	Document Number	Rev
Custom	LCD CONN	2A
Date: Monday, January 09, 2012	Sheet 26 of 51	

(8,10,26,29,34,35,37,38,39,42,45,46) +3VPCU
(37,47) LANVCC
(4,7,8,9,10,11,12,13,19,23,25,26,28,29,30,32,33,34,35,37,40,41,42,43,44,45,46,47) +3V

QUANTA CONFIDENTIAL TO ICT REVIEW

LANVCC

(37) LAN_ON
Q40 AO6402A
LANVCC
R421 *0_8_short
LANVCC_R
C505 *10U/6.3V/X5R_8
C506 0.1U/10V/X5R_4

* R448 open when use RTL8105E

TP32 LANVCC
R448 *LAN1G@10K_4
R431 1K/F_4
TP30
R433 10K_4
R434 10K_4
RJ45_LINKUP#
RJ45_ACTIVITY#
LED3/EEDO
EECS
EEDI

U24
RTL8105-VD-CG
RTL8111F-CG

CTRL12/VDD
LANVCC
CTRL12A
LAN_DVDD12
LAN_EVDD12
VDDREG, AVDD33, AVDD33(NC), DVDD33, DVDD3, REGOUT, AVDD10, AVDD10(NC), DVDD10, DVDD10(NC), EVDD10
GPO/SMBALERT, SMBCLK(NC), SMBDAT(NC), LED1/EESK, LED0, LED3/EEDO, EECS/SCL, EEDI/SDA, PERSTB, CLKREQB, HSIP, HSIN, REFCLK_P, REFCLK_N, HSOP, HSON, GND, RSET
MDIP0, MDIN0, MDIP1, MDIN1, MDIP2(NC), MDIN2(NC), MDIP3(NC), MDIN3(NC)
MDI_0+, MDI_0-, MDI_1+, MDI_1-, MDI_2+, MDI_2-, MDI_3+, MDI_3-
ISOLATEB, LANWAKEB, ENSWREG, CKXTAL1, CKXTAL2
PCIE_WAKE# (7,30) LANVCC
+3V
R440 1K_4
R442 15K_4
D27 RB500V-40
LAN_ISOLATEB (35)
XTAL1 XTAL2
Y4 25MHZ_30
C515 33P/50V/NPO_4
C516 33P/50V/NPO_4
EC-A-33
RSET
R432 2.49K/F_4
RV16 *EGA-0402
R443 0_4
LAN_RST#
(8,30) PLTRST#
(7) PCIE_CLKREQ_LAN#
GPP_TX2N_LAN C544 0.1U/10V/X5R_4
GPP_TX2P_LAN C546 0.1U/10V/X5R_4
PCIE_RXN2_LAN (2)
PCIE_RXP2_LAN (2)
CLK_PCIE_LANN (8)
CLK_PCIE_LANP (8)
PCIE_TXN2_LAN (2)
PCIE_TXP2_LAN (2)

LANVCC
C538 0.1U/10V/X5R_4
C534 0.1U/10V/X5R_4
C523 0.1U/10V/X5R_4
R418 *0_8_short
C518 0.1U/10V/X5R_4
CTRL12/VDD
C520 0.1U/10V/X5R_4
C513 4.7U/6.3V/X5R_6
EC-A-24

* C5110 to C5113 are for U5006 VDD33 pins-- 1, 29, 37 and 40.

Place C5113 ,C5094 closed to U5006 pins44,45.

* C476 and C472 are for U24 LAN_EVDD12 pin 21.

CTRL12A
L46 4.7uH
CTRL12A_R
C519 4.7U/6.3V/X5R_6
C514 0.1U/10V/X5R_4
EC-A-24
R449 *0_8_short
R435 *0_8_short
LAN_EVDD12
C543 1U/6.3V/X5R_4
C541 0.1U/10V/X5R_4
LAN_DVDD12
C524 0.1U/10V/X5R_4
C531 0.1U/10V/X5R_4
C537 0.1U/10V/X5R_4
C542 0.1U/10V/X5R_4
C529 0.1U/10V/X5R_4

* C5119 to C5123 are for U5006 VDD12 pins-- 10, 13, 30, 36, 39.

Layout:All termination signal should have 20 mil trace

Tramsformer

U37 *UCLAMP2512T.TCT
U34 *LAN1G@UCLAMP2512T.TCT
C747 0.01U/16V/X7R_4

MDI_0- R372 1/F_4 MDI_0-_C
MDI_0+ R371 1/F_4 MDI_0+_C
MDI_1- R370 1/F_4 MDI_1-_C
MDI_1+ R369 1/F_4 MDI_1+_C
MDI_2- R363 *LAN1G@1/F_4 MDI_2-_C
MDI_2+ R362 *LAN1G@1/F_4 MDI_2+_C
MDI_3- R361 *LAN1G@1/F_4 MDI_3-_C
MDI_3+ R360 *LAN1G@1/F_4 MDI_3+_C

U35 TST1284R LF
TD4-, TD4+, TCT4, TD3-, TD3+, TCT3, TD2-, TD2+, TCT2, TD1-, TD1+, TCT1
MX4-, MX4+, MCT4, MX3-, MX3+, MCT3, MX2-, MX2+, MCT2, MX1-, MX1+, MCT1
LAN_MX0-, LAN_MX0+, LAN_MCT0, LAN_MX1-, LAN_MX1+, LAN_MCT1, LAN_MX2-, LAN_MX2+, LAN_MCT2, LAN_MX3-, LAN_MX3+, LAN_MCT3

Layout: All termination signal should have 30 mil trace

R372 75/F_1206 LANCT3
R367 75/F_1206 LANCT5
R364 LAN1G@0_8
R359 LAN1G@0_8
D30 D31 D36 D33 *BS201N-LV_1206 Reserve for Surge
Gas Tube Discharge

R364,R359 if use 1G LAN need change to 75 ohm

EC-B-13

0_1206 R361
R579 1M_8
C63 1000P/2KV/X7R_1808
C62 BS201N-LV_1206

RJ45 Connector

U36 U33 *AZC199-04S.R7G
MDI_0+_C MDI_0-_C MDI_1-_C MDI_1+_C
MDI_2+_C MDI_2-_C MDI_3-_C MDI_3+_C
LANVCC
10/100 non-stuff

EMI:close RJ45
RV33 *AZ5123-01H
C376 *0.1U/10V/X5R_4@NC
CN14
Orange LED
LAN_OLED
R322 150_4
RJ45_LINKUP#
RV12 RV11 RV18 *AZ5123-01H
LAN_MX0+, LAN_MX0-, LAN_MX1+, LAN_MX2+, LAN_MX2-, LAN_MX1-, LAN_MX3+, LAN_MX3-
R351 150_4
LAN_GLED
RJ45_ACTIVITY#
GREEN LED
C425 *0.1U/10V/X5R_4@NC
RJ45
RJ45 Connector
EMI:close RJ45

CODEC(ADO)

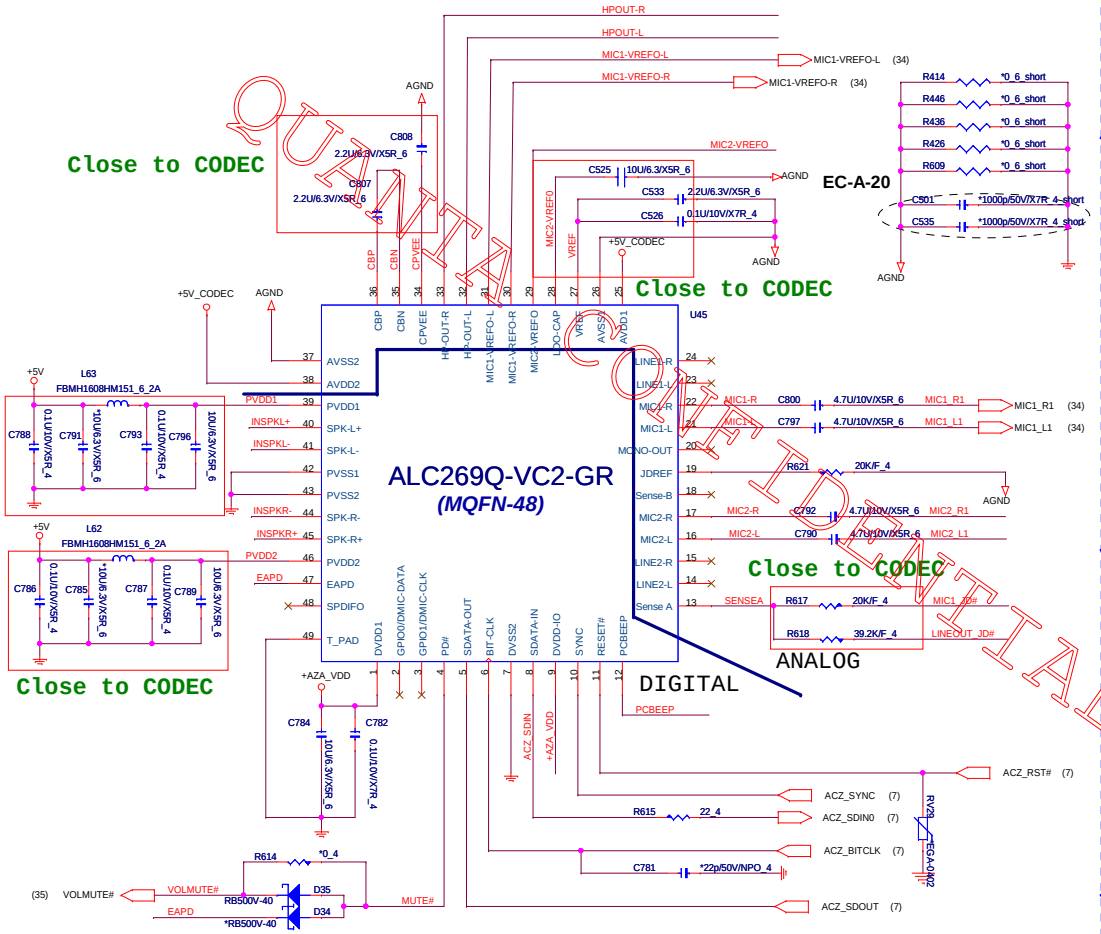

Codec Power(ADO)

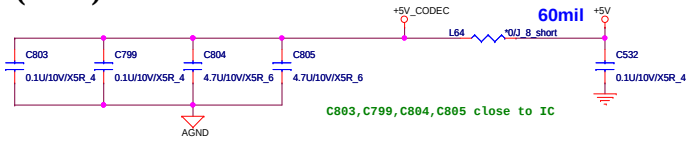

Earphone(AMP)

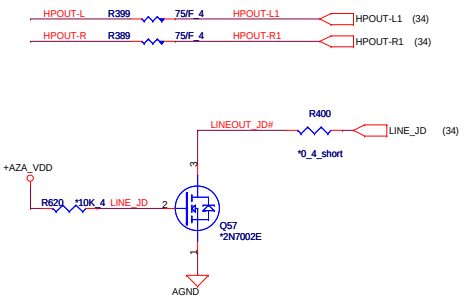

HDA Power(ADO)

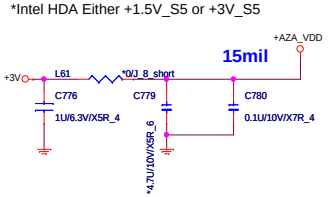

System MIC(AMP)

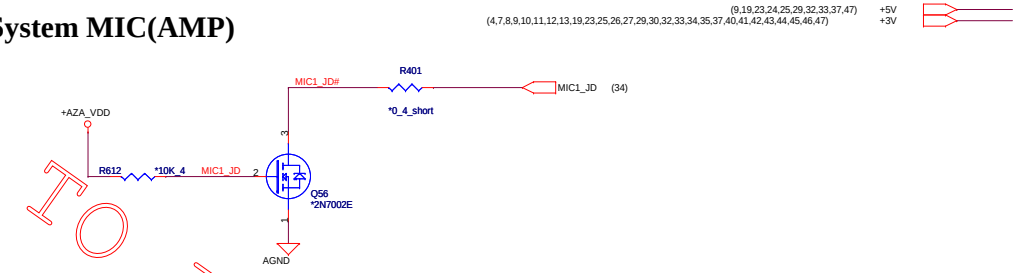

Speaker(AMP)

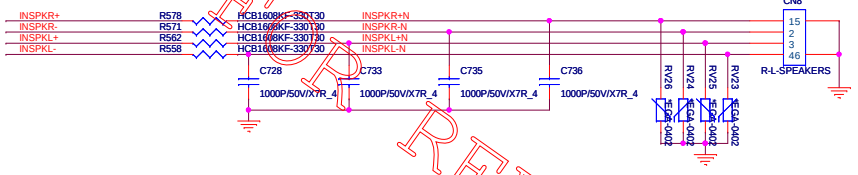

INTERNAL MIC

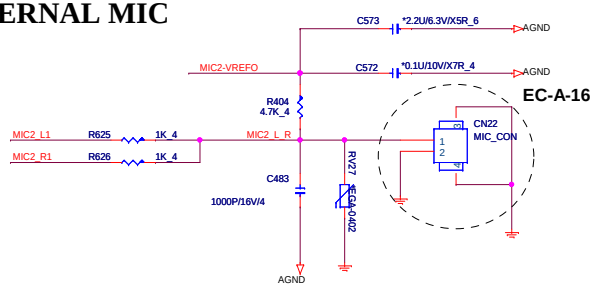

PC BEEP

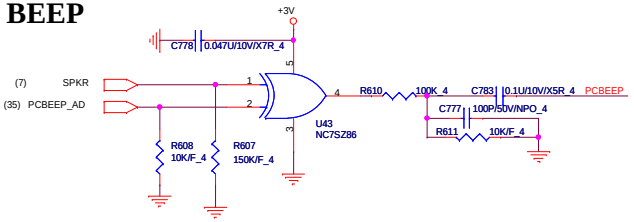

QUANTA CONFIDENTIAL
Do Not Copy
FOR REVIEW

PROJECT : LZ2C
Quanta Computer Inc.

Size	Document Number	Rev
Custom	ALC269/MIC/Line out	2A
Date: Monday, January 09, 2012	Sheet 28 of 51	

SATA HDD Connector.

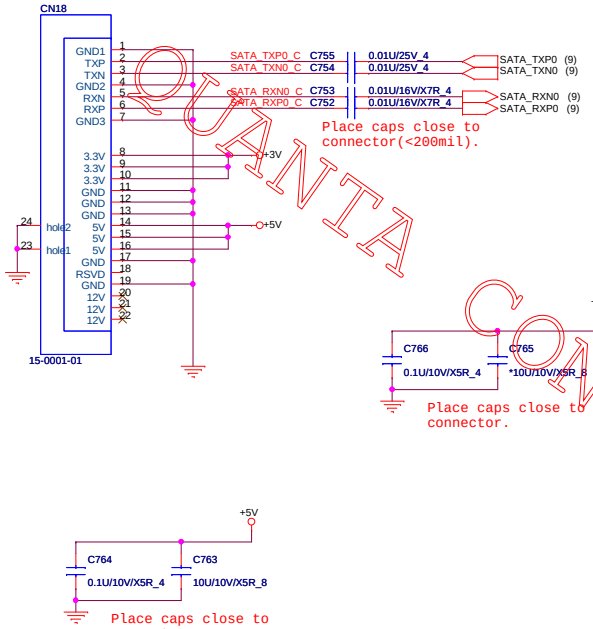

SATA ODD Connector.

(26,31,34,37,47) +5V_S5
(4,7,8,9,10,11,12,13,19,23,25,26,27,28,30,32,33,34,35,37,40,41,42,43,44,45,46,47) +3V
(37,38,39,40,41,42,43,44,45,46) +5VPCU
(8,10,26,27,34,35,37,38,39,42,45,46) +3VPCU
(10,26,33,37,39,41,46) +15V

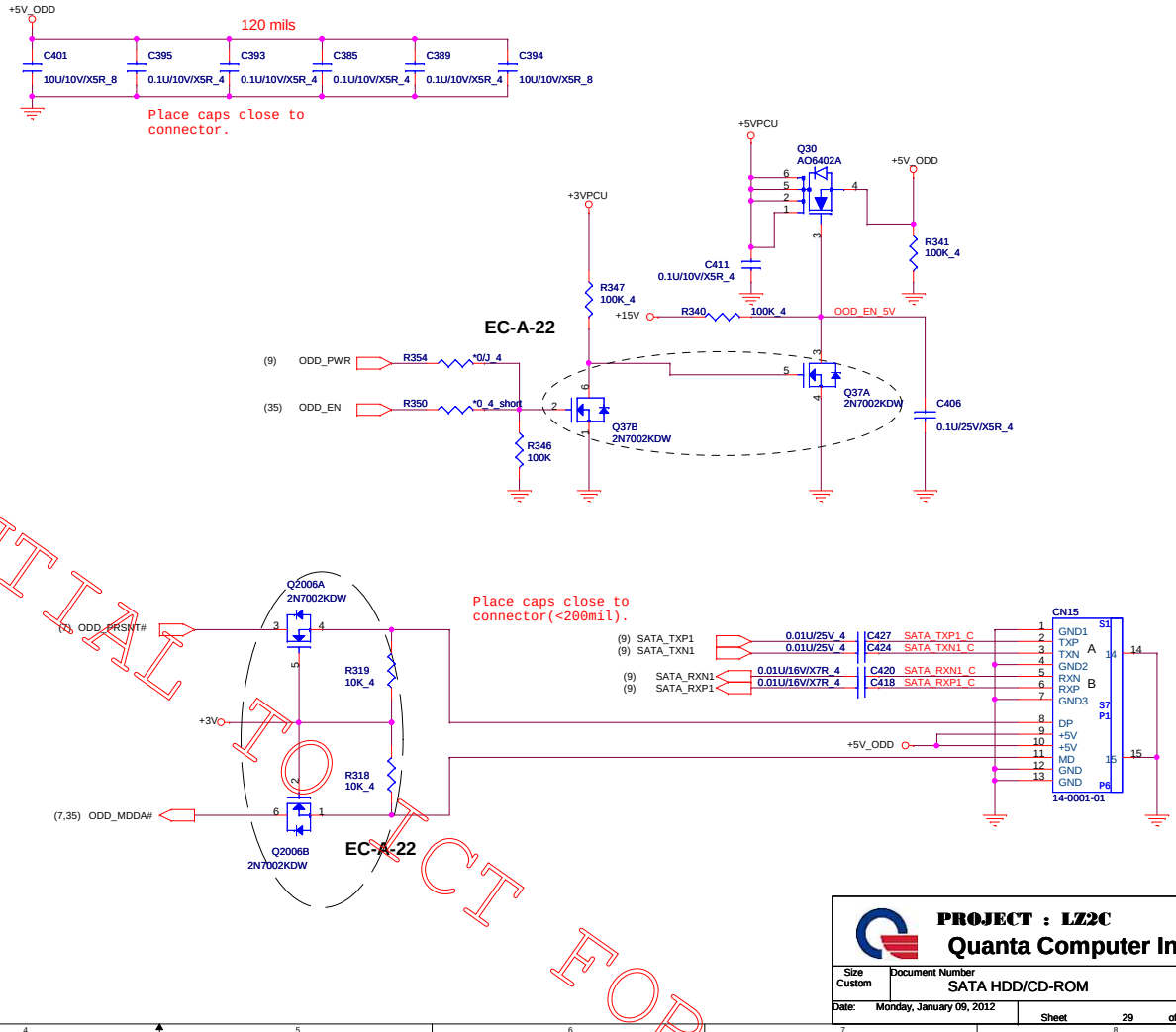

PROJECT : LZ2C		
Quanta Computer Inc.		
Size: Custom	Document Number: SATA HDD/CD-ROM	Rev: 2A
Date: Monday, January 09, 2012	Sheet 29 of 51	

QUANTA CONFIDENTIAL NOT FOR REVIEW

MiniCard WLAN connector

QUANTA CONFIDENTIAL
NOT FOR REVIEW

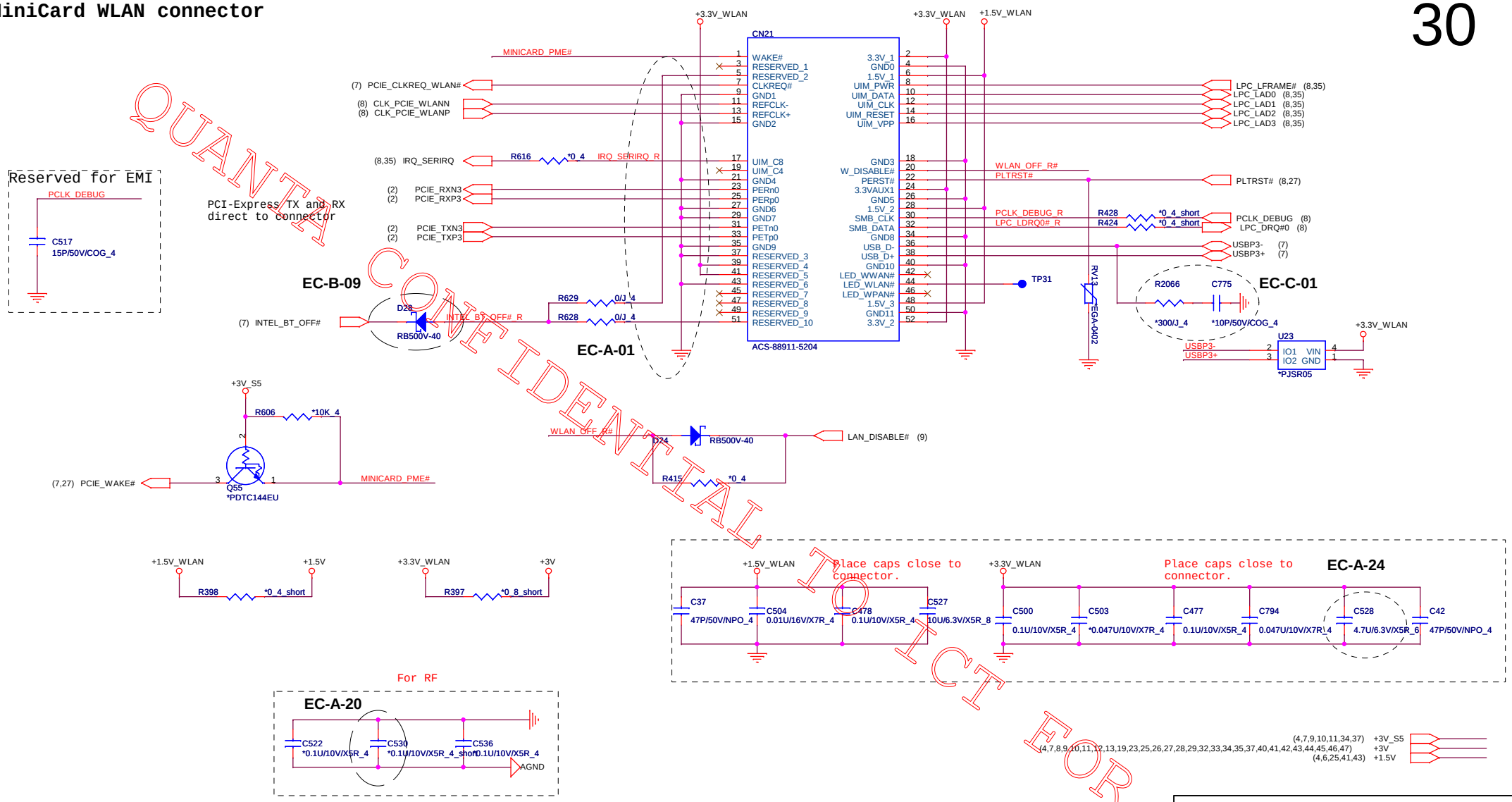

PROJECT : LZ2C

Quanta Computer Inc.

Size	Document Number	Rev
Custom	MINI-Card WLAN	2A
Date: Monday, January 09, 2012	Sheet 30 of 51	

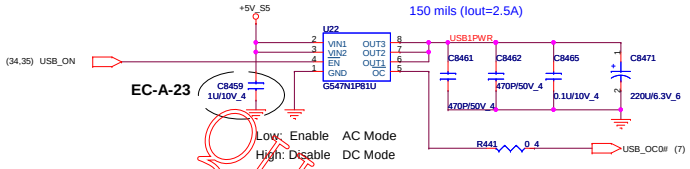

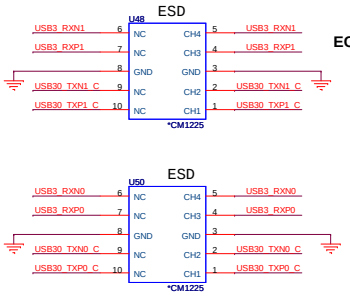

USB3.0 X 2/USB2.0 COMBO

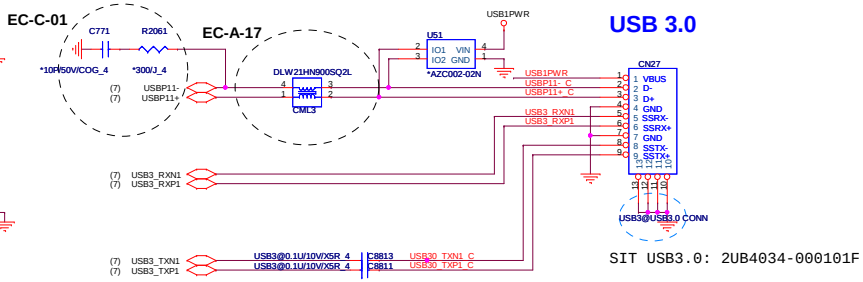

SIT USB3.0: 2UB4034-000101F

USB2.0*1

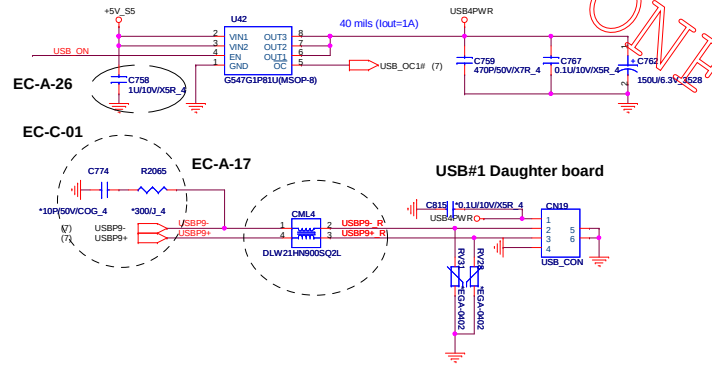

EC-B-10

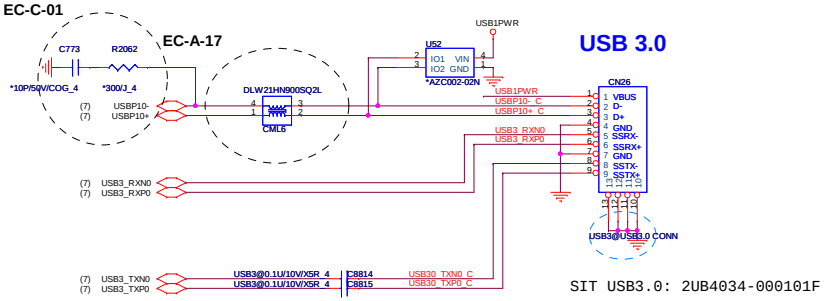

SIT USB3.0: 2UB4034-000101F

PROJECT : LZ2C
Quanta Computer Inc.

Size	Document Number	Rev
Custom	USB3.0 x 2/USB 2.0 x 1	2A
Date: Monday, January 09, 2012	Sheet 31 of 51	

QUANTA COMPUTER CONFIDENTIAL
NOT FOR REVIEW

FAN CONTROL

(4,7,8,9,10,11,12,13,19,23,25,26,27,28,29,30,33,34,35,37,40,41,42,43,44,45,46,47) +3V
(9,19,23,24,25,28,29,33,37,47) +5V

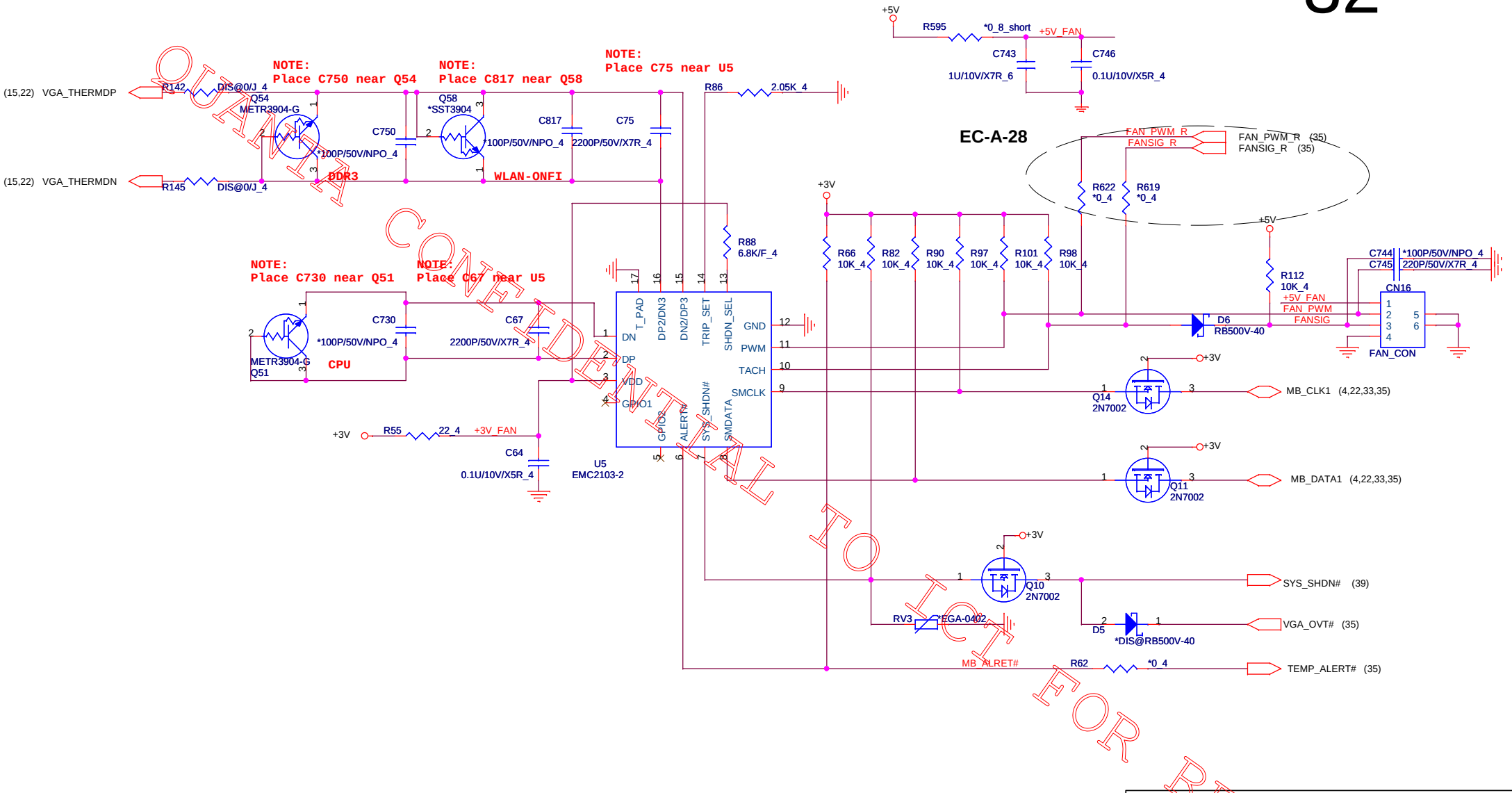

QUANTA CONFIDENTIAL
FOR REVIEW

PROJECT : LZ2C
Quanta Computer Inc.

Size	Document Number	Rev
Custom	FAN /THERMAL	2A
Date: Monday, January 09, 2012	Sheet 32 of 51	

(4,7,8,9,10,11,12,13,19,23,25,26,27,28,29,30,32,34,35,37,40,41,42,43,44,45,46,47) +3V
(10,26,29,37,39,41,46) +15V
(9,19,23,24,25,28,29,32,37,47) +5V

CCD BOARD

EC-C-01

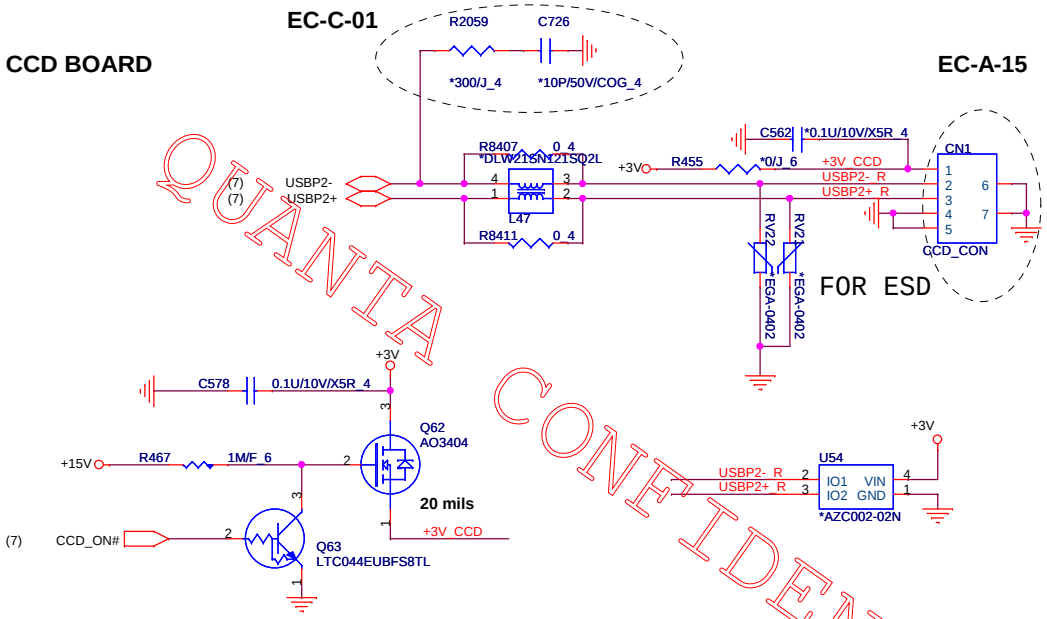

EC-A-15

FOR ESD

BLUETOOTH

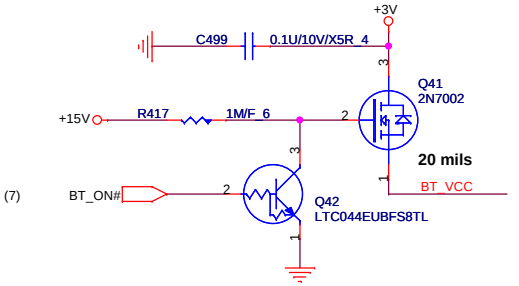

EC-C-01

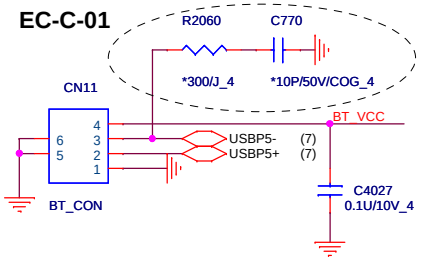

MMB

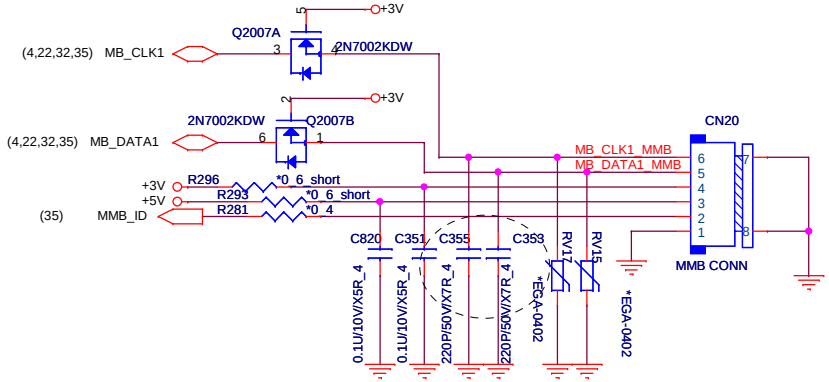

EC-A-36

QUANTA CONFIDENTIAL TO ICT FOR REVIEW

PROJECT : LZ2C
Quanta Computer Inc.

Size	Document Number	Rev
	BT/USB2.0*2	2A
Date: Monday, January 09, 2012	Sheet 33 of 51	

KEYBOARD

For EMI request

EC-A-18

EC-B-11

CN5

CA1 220PX4

CA5 220PX4

CA2 220PX4

CA6 220PX4

EC-B-11

EC-A-32

C760 220P/50V/X7R_4

C761 220P/50V/X7R_4

KB_ID	
14''	1
15''	0

POWER BOARD

CN6 Slide bar 2.0 CONN

EC-A-34

Touch pad

CN7 Touch Pad CONN

LED

Battery

Power/suspend LED

CAPS LED

Q18 LTC044EUBFS8TL

Card reader B to B

close to card reader B to B

U41 G547G1P81U(MSOP-8)

EC-A-26

EC-C-01

CN10 CRB-CON(88502-2401)

EC-A-19

QUANTA CONFIDENTIAL TO ICT FOR REVIEW

PROJECT : LZ2C

Quanta Computer Inc.

Size	Document Number	Rev
Custom	K/B,T/P,LED,PB,CRB	2A

Date: Monday, January 09, 2012 Sheet 34 of 51

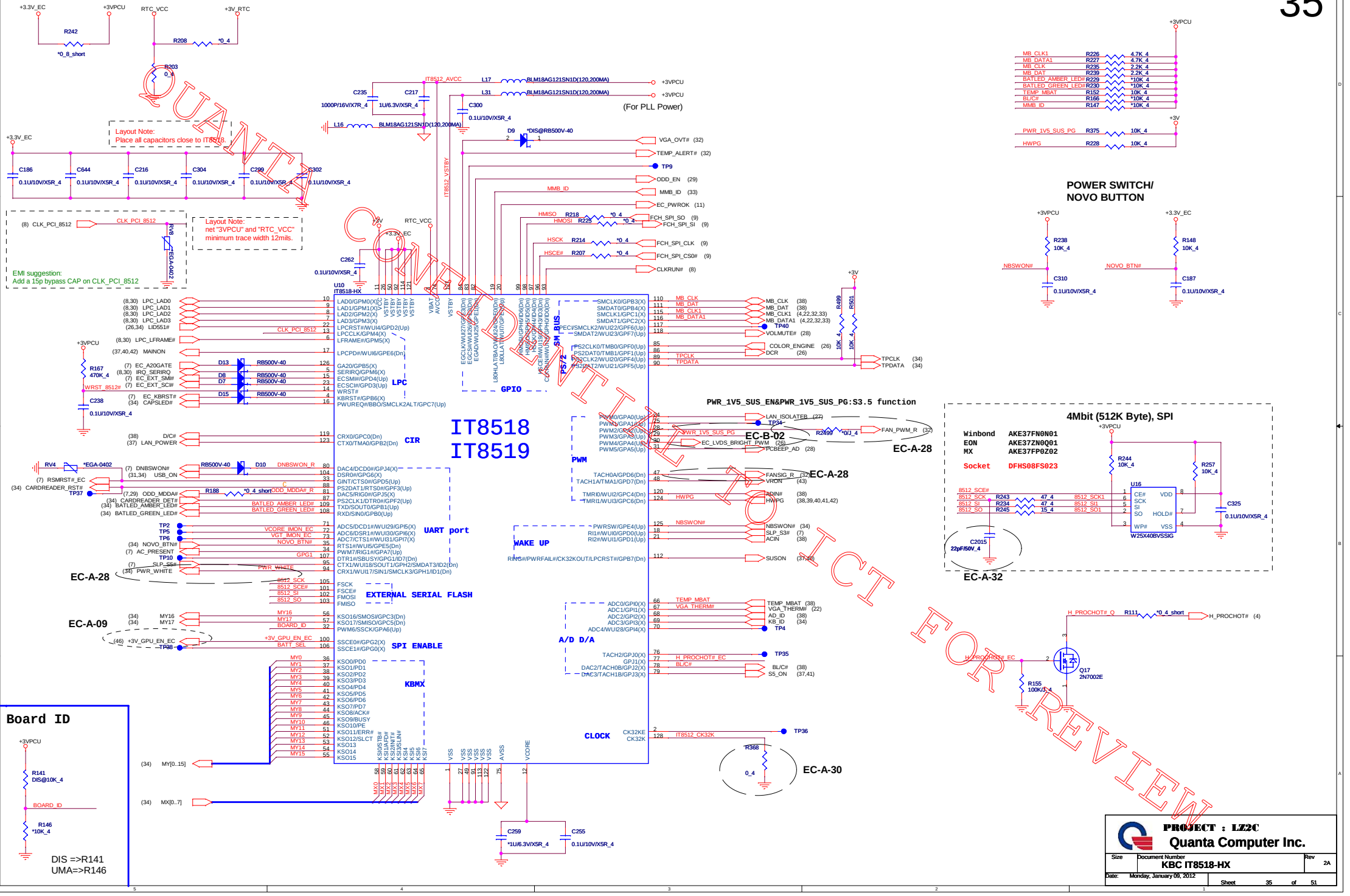

PROJECT :	LZ2C
Quanta Computer Inc.	
Size	
Document Number	KBC IT8518-HX
Rev	2A
Date:	Monday, January 09, 2012
Sheet	35 of 51

Screw for ME

VGA

HOLE18 HOLE20

DIS@H-TC5_5BC4I3D3P2 DIS@H-TC5_5BC4I3D3P2

SMT NUT H=4/7mm

EC-A-26

HOLE17 HOLE4 HOLE7 HOLE13 HOLE16

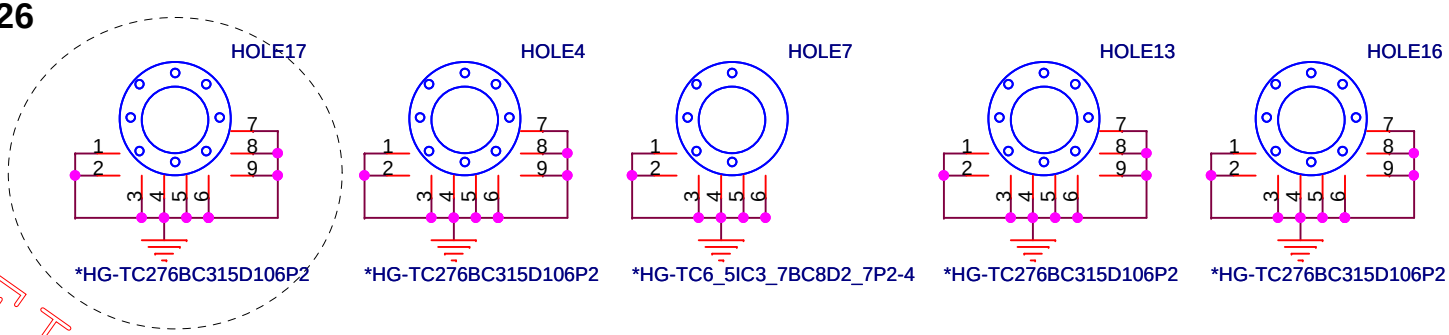

*HG-TC276BC315D106P2 *HG-TC276BC315D106P2 *HG-TC6_5IC3_7BC8D2_7P2-4 *HG-TC276BC315D106P2 *HG-TC276BC315D106P2

CPU BKT

HOLE9 HOLE11 HOLE5 HOLE1 HOLE2 HOLE3 HOLE6 HOLE8 HOLE10 HOLE12

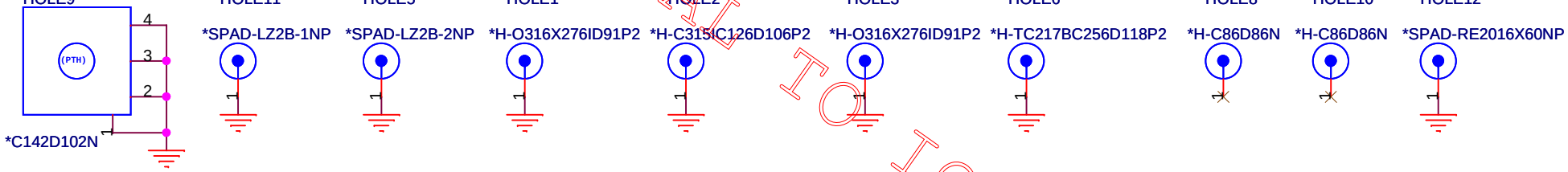

*C142D102N *SPAD-LZ2B-1NP *SPAD-LZ2B-2NP *H-O316X276ID91P2 *H-C315IC126D106P2 *H-O316X276ID91P2 *H-TC217BC256D118P2 *H-C86D86N *H-C86D86N *SPAD-RE2016X60NP

HOLE14 HOLE15

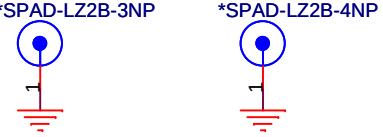

*SPAD-LZ2B-3NP *SPAD-LZ2B-4NP

QUANTA CONFIDENTIAL TO ICT FOR REVIEW

PROJECT : LZ2C

Quanta Computer Inc.

Size	Document Number	Rev
Custom	HOLD & SKEW	2A
Date: Monday, January 09, 2012	Sheet 36 of 51	

DISCHARGE

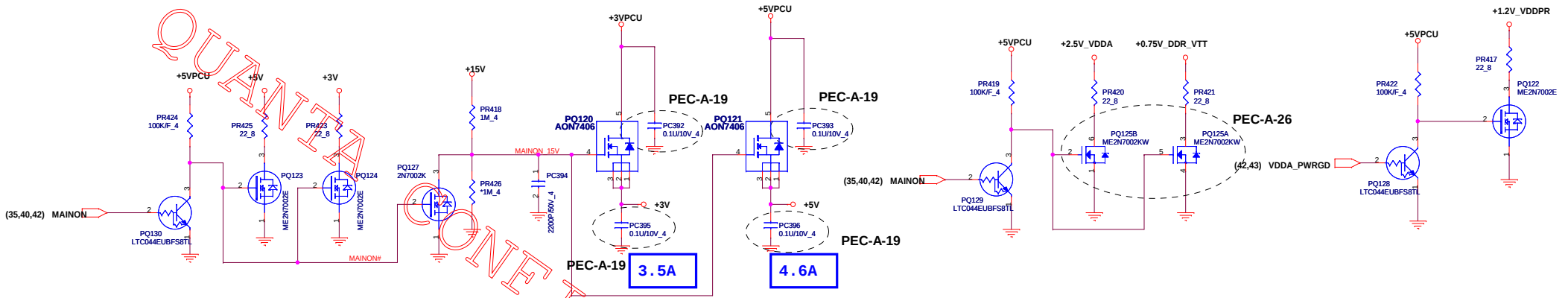

3V_S5,5V_S5

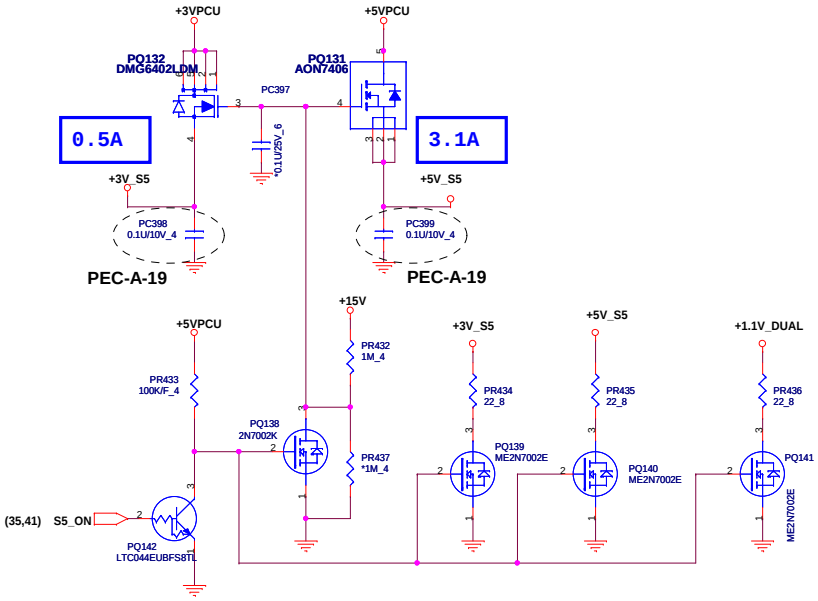

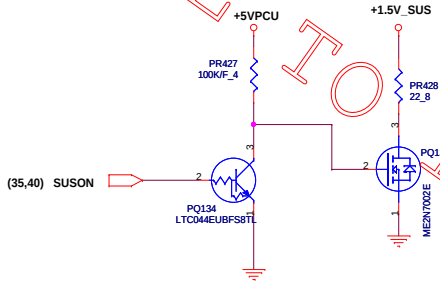

LANVCC

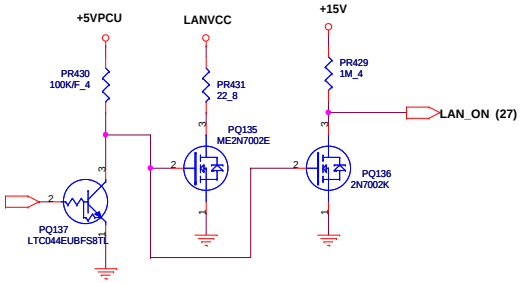

QUANTA CONFIDENTIAL TO ICT FOR REVIEW

PROJECT : LZ2C		
Quanta Computer Inc.		
Size: Custom	Document Number: Discharge	Rev: 2A
Date: Monday, January 09, 2012	Sheet 37 of 51	

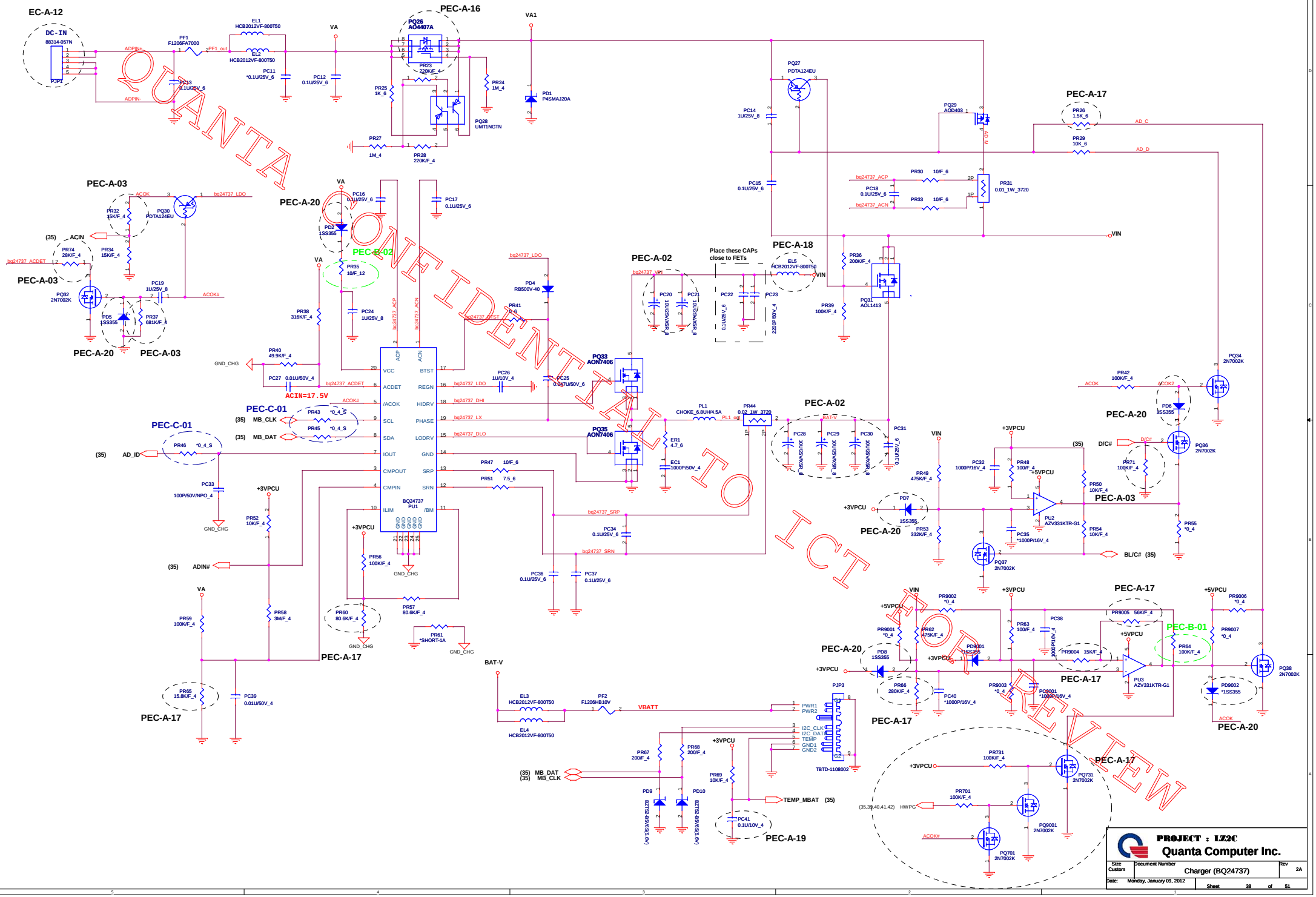
EC-A-12
DC-IN
88314-057N
PJP1
PF1
F1206FA7000
EL1
HCB2012VF-800T50
EL2
HCB2012VF-800T50
PC11
*0.1U/25V_6
PC13
0.1U/25V_6
VA
PC12
0.1U/25V_6
PEC-A-16
PQ26
AO4407A
PR23
220K/F_4
PR25
1K_6
PR27
1M_4
PR28
220K/F_4
PR24
1M_4
PQ28
UMT1NGTN
VA1
PD1
P4SMAJ20A
PEC-A-03
PR32
15K/F_4
PQ30
PDTA124EU
PR74
28K/F_4
PR34
15K/F_4
PC19
1U/25V_8
PQ32
2N7002K
PD5
1SS355
PR37
681K/F_4
PEC-A-20
PEC-A-03
PEC-A-20
PC16
0.1U/25V_6
PC17
0.1U/25V_6
PD2
1SS355
PR35
10/F_12
PR38
316K/F_4
PC24
1U/25V_8
PR40
49.9K/F_4
PC27
0.01U/50V_4
ACIN=17.5V
PEC-B-02
PEC-C-01
PR43
*0_4_S
PR45
*0_4_S
PEC-C-01
PR46
*0_4_S
PC33
100P/50V/NPO_4
PR52
10K/F_4
PR56
100K/F_4
PR60
80.6K/F_4
PR61
*SHORT-1A
PR57
80.6K/F_4
PEC-A-17
PR59
100K/F_4
PR58
3M/F_4
PR65
15.8K/F_4
PC39
0.01U/50V_4
PEC-A-17
PD4
RB500V-40
PR41
0_6
PC26
1U/10V_4
PC25
0.047U/50V_6
PQ33
AON7406
PQ35
AON7406
PL1
CHOKE_6.8UH/4.5A
PR44
0.02_1W_3720
ER1
4.7_6
EC1
1000P/50V_4
PR47
10/F_6
PR51
7.5_6
PC34
0.1U/25V_6
PC36
0.1U/25V_6
PC37
0.1U/25V_6
BQ24737
PU1
PEC-A-02
PC20
PC21
PC22
PC23
PEC-A-18
EL5
HCB2012VF-800T50
PR36
200K/F_4
PR39
100K/F_4
PQ31
AOL1413
PEC-A-02
PC28
PC29
PC30
PC31
PEC-A-17
PQ27
PDTA124EU
PC14
1U/25V_8
PC15
0.1U/25V_6
PQ29
AOD403
PR26
1.5K_6
PR29
10K_6
PR30
10/F_6
PR33
10/F_6
PC18
0.1U/25V_6
PR31
0.01_1W_3720
VIN
PEC-A-20
PR42
100K/F_4
PD6
1SS355
PQ34
2N7002K
PQ36
2N7002K
PEC-A-03
PR48
100/F_4
PR50
10K/F_4
PR71
100K/F_4
PR49
475K/F_4
PR53
332K/F_4
PR54
10K/F_4
PR55
*0_4
PU2
AZV331KTR-G1
PC32
1000P/16V_4
PC35
*1000P/16V_4
PD7
1SS355
PQ37
2N7002K
BL/C# (35)
PEC-A-17
PR9002
*0_4
PR9001
*0_4
PR62
475K/F_4
PD8
1SS355
PR66
280K/F_4
PC40
*1000P/16V_4
PR9005
56K/F_4
PR63
100/F_4
PC38
PR9004
15K/F_4
PR9003
*0_4
PC9001
*1000P/16V_4
PD9001
*1SS355
PU3
AZV331KTR-G1
PR64
100K/F_4
PR9006
*0_4
PR9007
*0_4
PD9002
*1SS355
PQ38
2N7002K
PEC-B-01
PEC-A-20
PEC-A-17
PJP3
TBTD-1108002
PR67
200/F_4
PR68
200/F_4
PR69
10K/F_4
PD9
PD10
PC41
0.1U/10V_4
PEC-A-19
TEMP_MBAT (35)
PEC-A-17
PR731
100K/F_4
PQ731
2N7002K
PR701
100K/F_4
PQ701
2N7002K
PQ9001
2N7002K
PROJECT : LZ2C
Quanta Computer Inc.
Charger (BQ24737)
Size: Custom
Document Number
Rev: 2A
Date: Monday, January 09, 2012
Sheet 38 of 51

QUANTA CONFIDENTIAL
HOLD FOR REVIEW

+5VPCU
Fs=400K
TDC :6A
Imax :8A
OCP :10A

+3VPCU
Fs=500K
TDC :6A
Imax :8A
OCP :10A

PU4 TPS51123ARGER

PQ40 AON7406
PQ41 AON7702
PQ39 AON7406
PQ42 AON7702

PL2 2.2UH/8A-PCMC063T-2R2MN
PL3 2.2UH/8A-PCMC063T-2R2MN

PROJECT : LZ2C
Quanta Computer Inc.
Size: Custom
Document Number: 3V/5V (TPS51123ARGER)
Rev: 2A
Date: Monday, January 09, 2012
Sheet 39 of 51

QUANTA COMPUTER CONFIDENTIAL
ICT FOR REVIEW

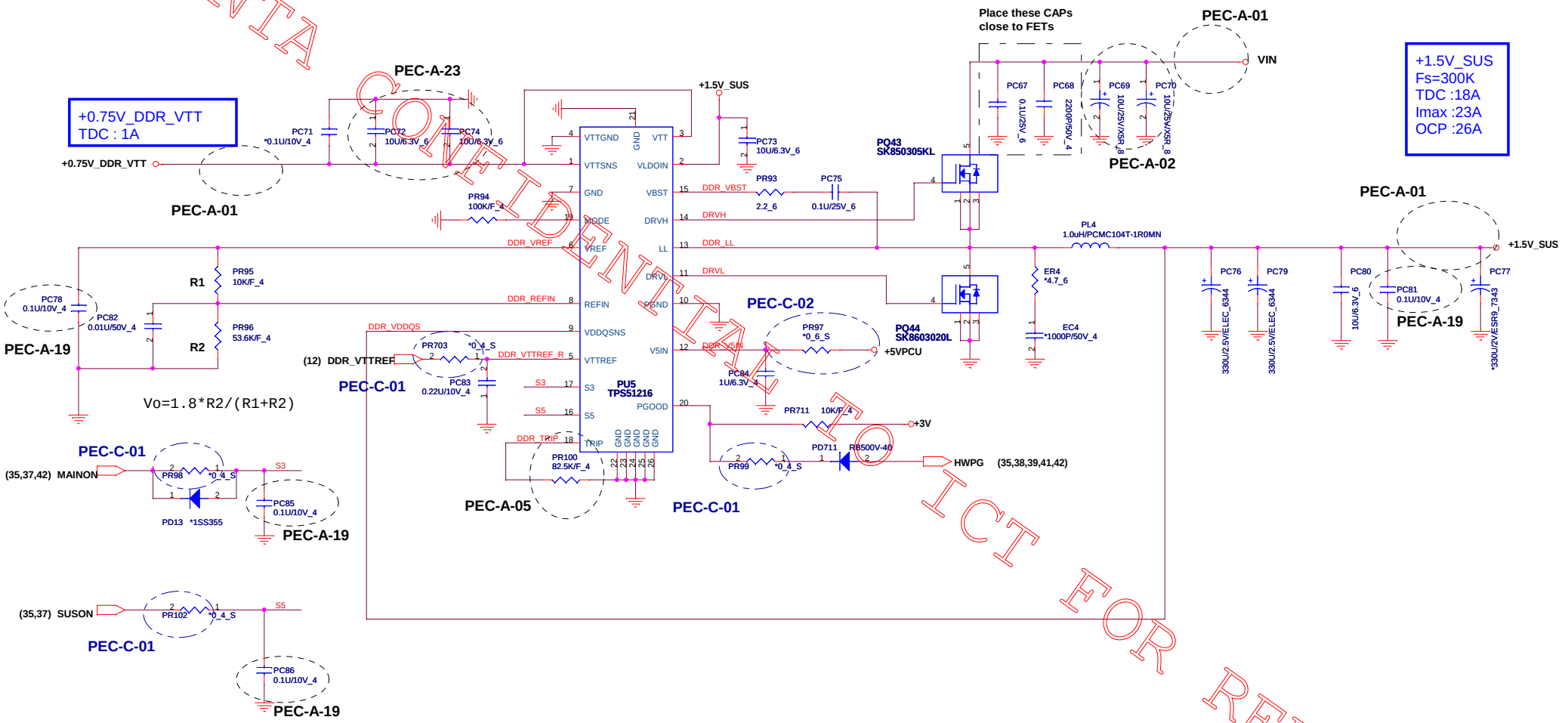

PROJECT : LZ2C		
Quanta Computer Inc.		
Size: Custom	Document Number: DDR3/0.75V (TPS51216)	Rev: 2A
Date: Monday, January 09, 2012	Sheet 40 of 51	

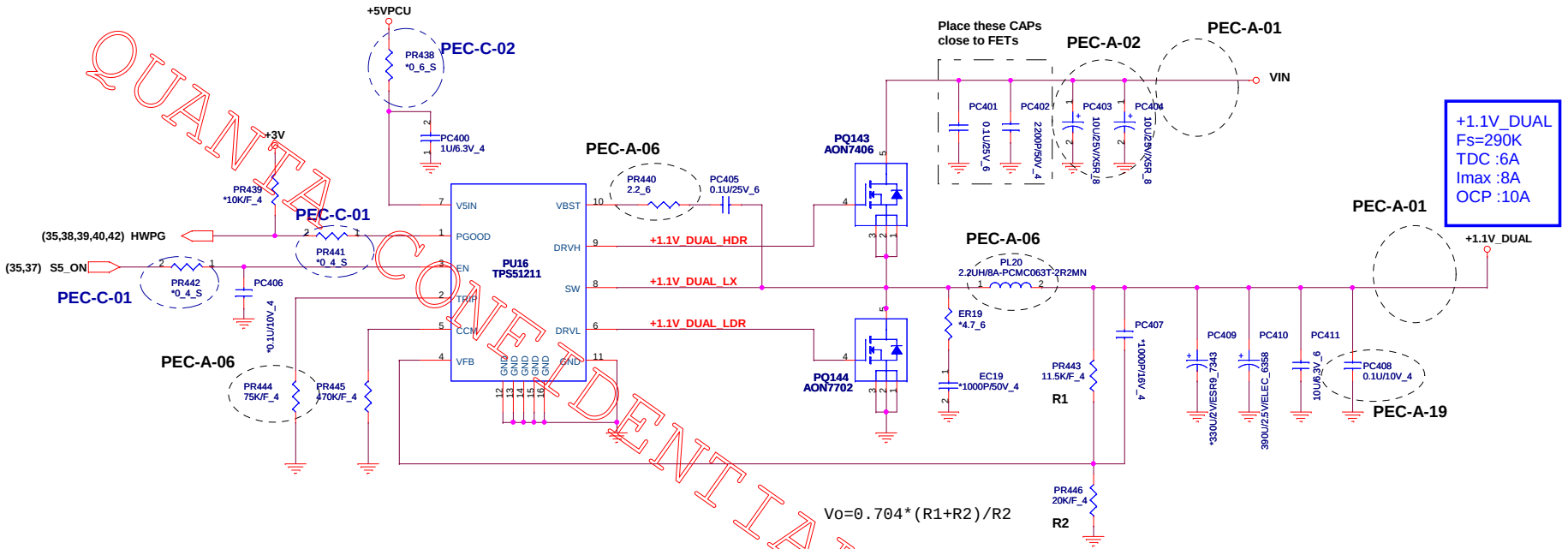

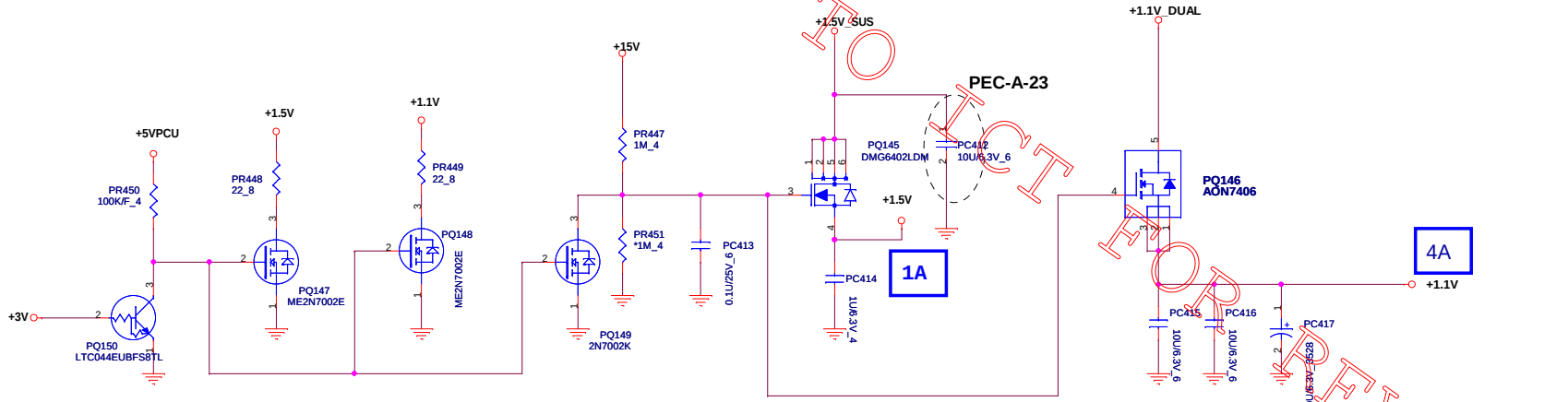

QUANTA COMPUTER CONFIDENTIAL
HOLD FOR REVIEW

PROJECT : LZ2C
Quanta Computer Inc.

Size	Document Number	Rev
Custom	+1.1V_DUAL & 1.1V	2A
Date: Monday, January 09, 2012	Sheet 41 of 51	

QUANTA CONFIDENTIAL TO ICT REVIEW

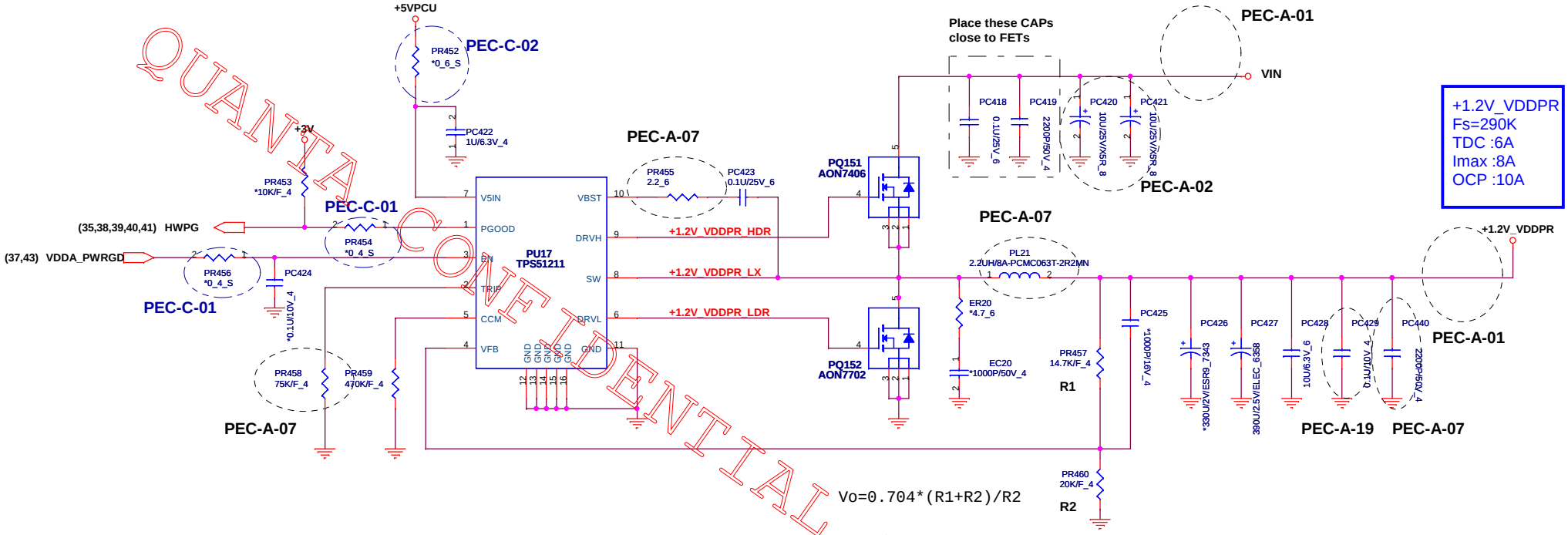

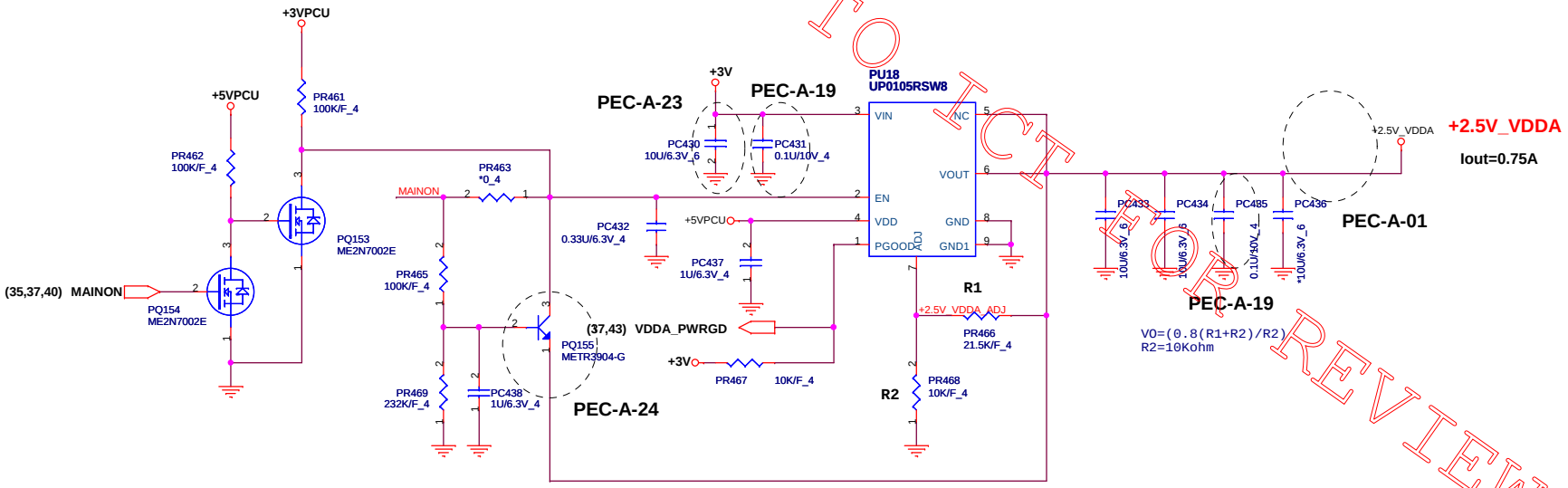

PROJECT : LZ2C		
Quanta Computer Inc.		
Size: Custom	Document Number: +1.2V_VDDPR/+2.5V_VDDA	Rev: 2A
Date: Monday, January 09, 2012	Sheet 42 of 51	

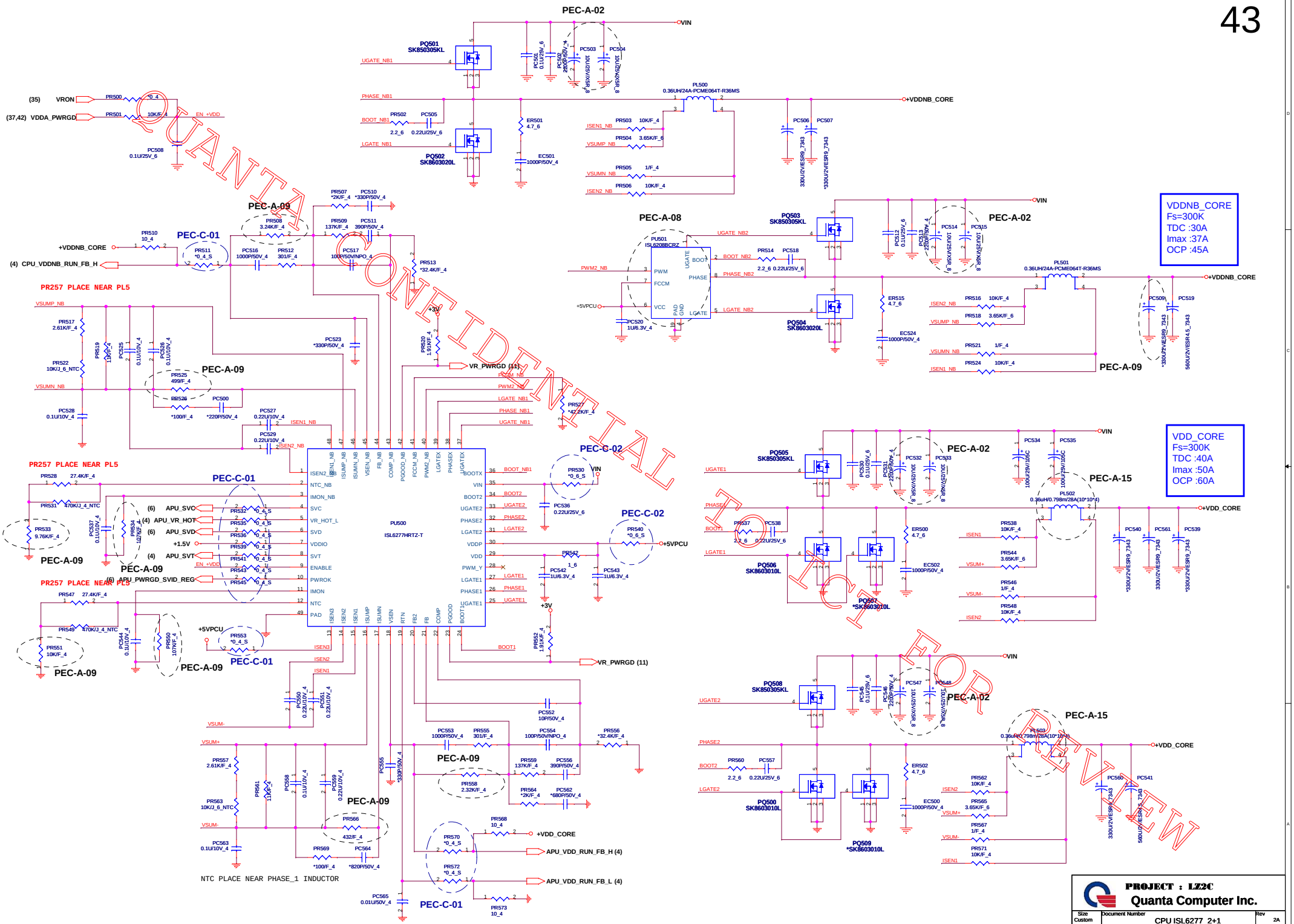
PEC-A-02
VIN
PQ501
SK850305KL
PQ502
SK8603020L
PL500
0.36UH/24A-PCME064T-R36MS
+VDDNB_CORE
(35) VRON
(37,42) VDDA_PWRGD
EN_+VDD
PEC-A-09
PEC-C-01
+VDDNB_CORE
(4) CPU_VDDNB_RUN_FB_H
PR257 PLACE NEAR PL5
PEC-A-08
PU501
ISL6208BCRZ
PQ503
SK850305KL
PQ504
SK8603020L
PL501
0.36UH/24A-PCME064T-R36MS
VDDNB_CORE
Fs=300K
TDC :30A
Imax :37A
OCP :45A
VR_PWRGD (11)
PEC-C-02
PU500
ISL6277HRTZ-T
+5VPCU
(6) APU_SVC
(4) APU_VR_HOT
(6) APU_SVD
+1.5V
(4) APU_SVT
(6) APU_PWRGD_SVID_REG
PEC-A-15
PQ505
SK850305KL
PQ506
SK8603010L
PQ507
*SK8603010L
PL502
0.36uH/0.798m/28A(10*10*4)
+VDD_CORE
VDD_CORE
Fs=300K
TDC :40A
Imax :50A
OCP :60A
PQ508
SK850305KL
PQ500
SK8603010L
PQ509
*SK8603010L
PL503
0.36uH/0.798m/28A(10*10*4)
APU_VDD_RUN_FB_H (4)
APU_VDD_RUN_FB_L (4)
NTC PLACE NEAR PHASE_1 INDUCTOR
QUANTA CONFIDENTIAL
PROJECT : LZ2C
Quanta Computer Inc.
Size Custom
Document Number CPU ISL6277_2+1
Rev 2A
Date: Monday, January 09, 2012
Sheet 43 of 51

Seymour XT M2

PWRCNTL1 GPIO20	PWRCNTL0 GPIO15	Voltage
0	0	0.9V
0	1	0.95V
1	0	1.05V
1	1	1.15V

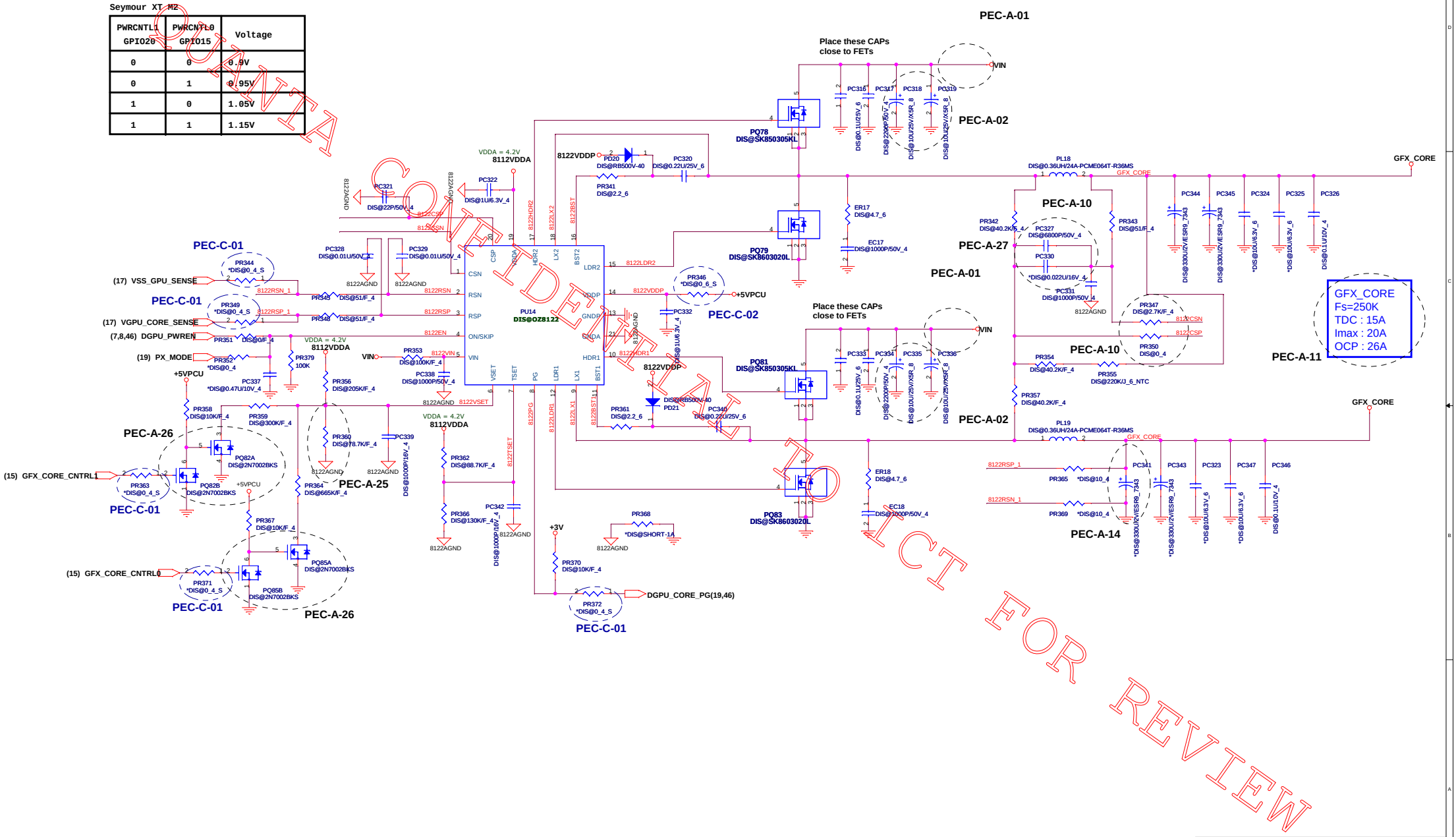

QUANTA COMPUTER LTD. PROJECT FOR REVIEW

PROJECT : LZ2C

Quanta Computer Inc.

Size	Document Number	Rev
Custom	DGPU (OZ8122) 2 Phase	2A

Date: Monday, January 09, 2012

Sheet 44 of 51

QUANTA COMPUTER CONFIDENTIAL TO ICT FOR REVIEW

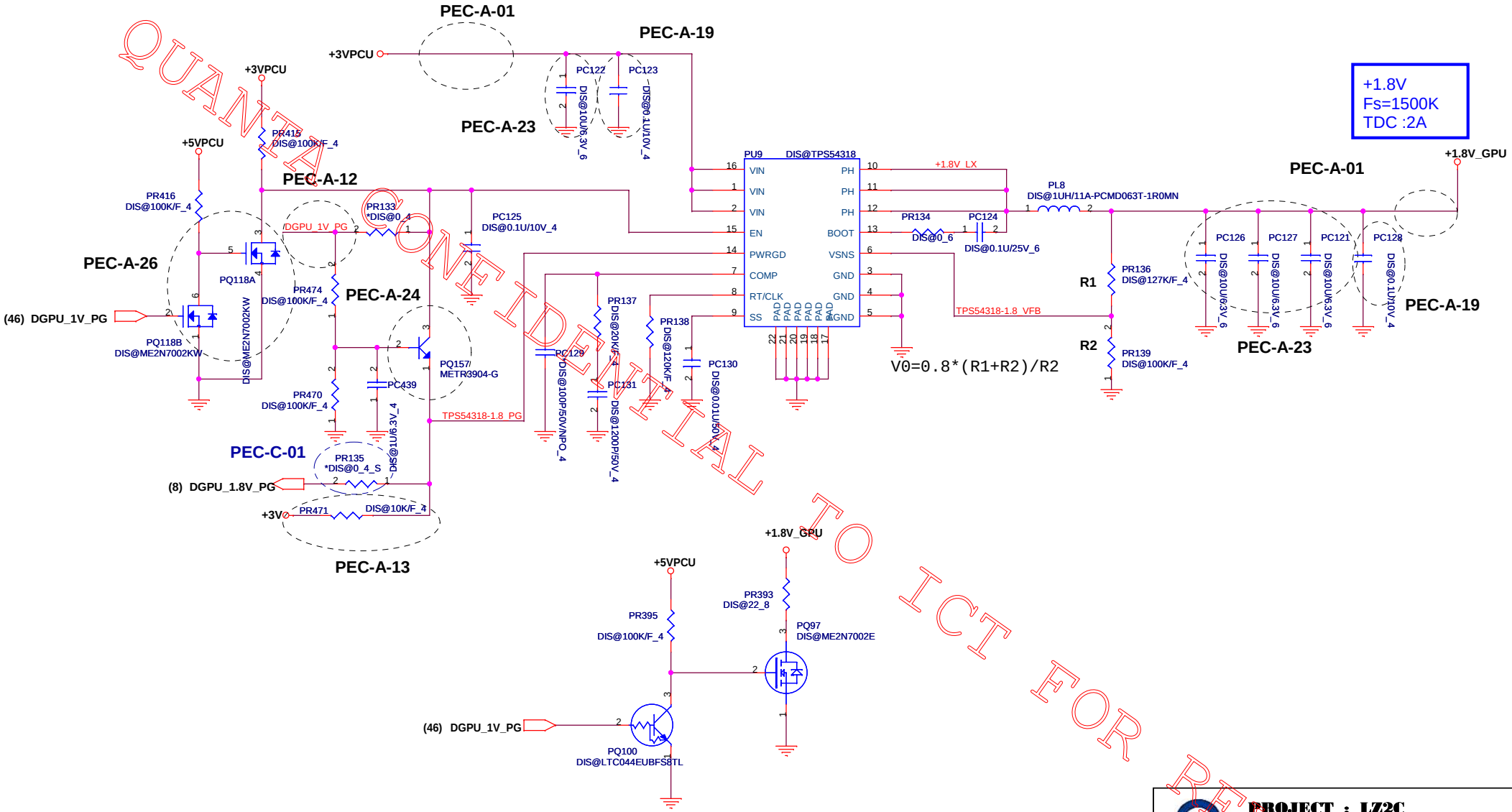

PROJECT : LZ2C

Quanta Computer Inc.

Size	Document Number	Rev
B	1.8V (TPS54318)	2A
Date: Monday, January 09, 2012	Sheet 45 of 51	

QUANTA COMPUTER CONFIDENTIAL TO ICT FOR REVIEW

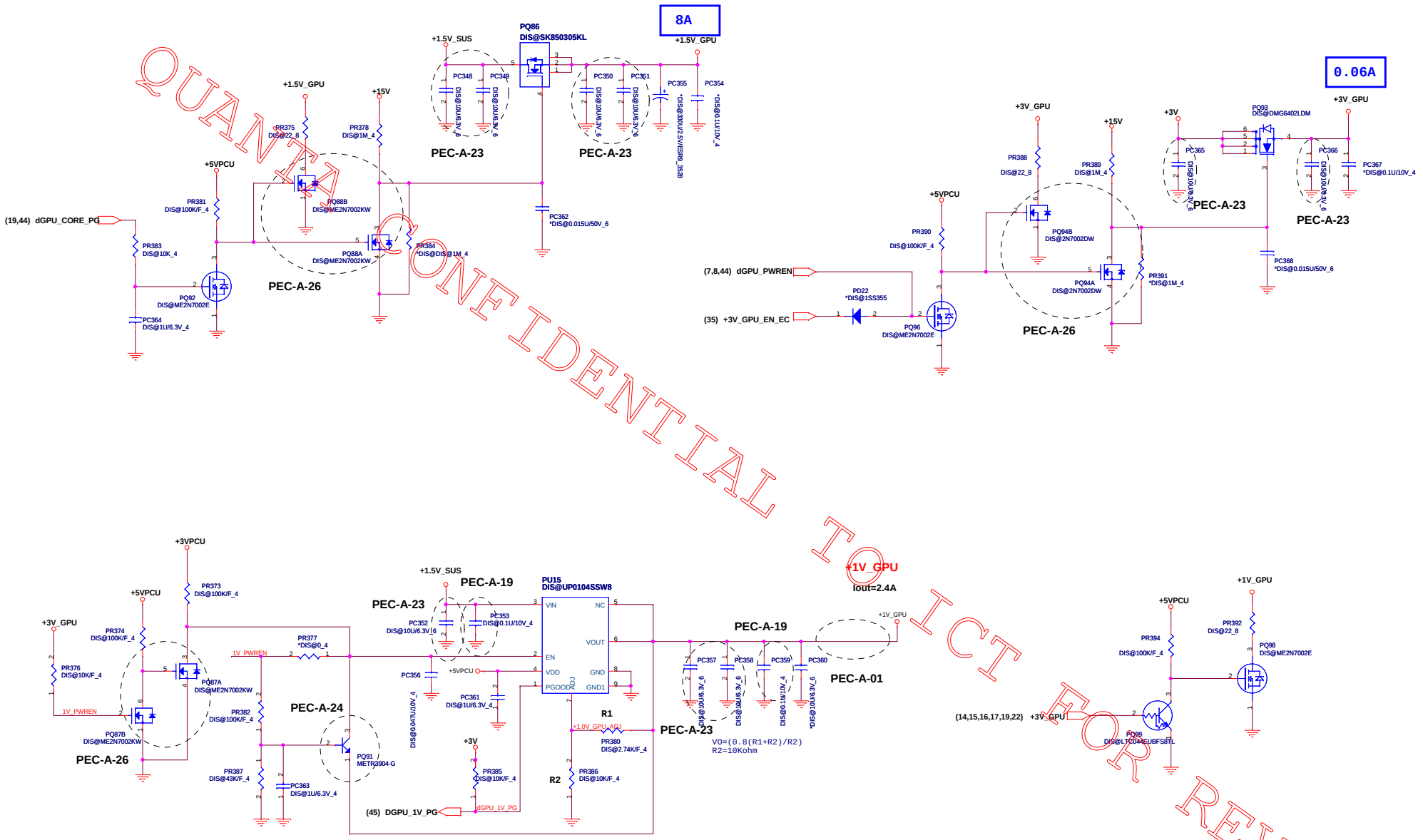

PROJECT : LZ2C		
Quanta Computer Inc.		
Size: C	Document Number: GPU	Rev: 2A
Date: Monday, January 09, 2012	Sheet 46 of 51	

ESD suggestion

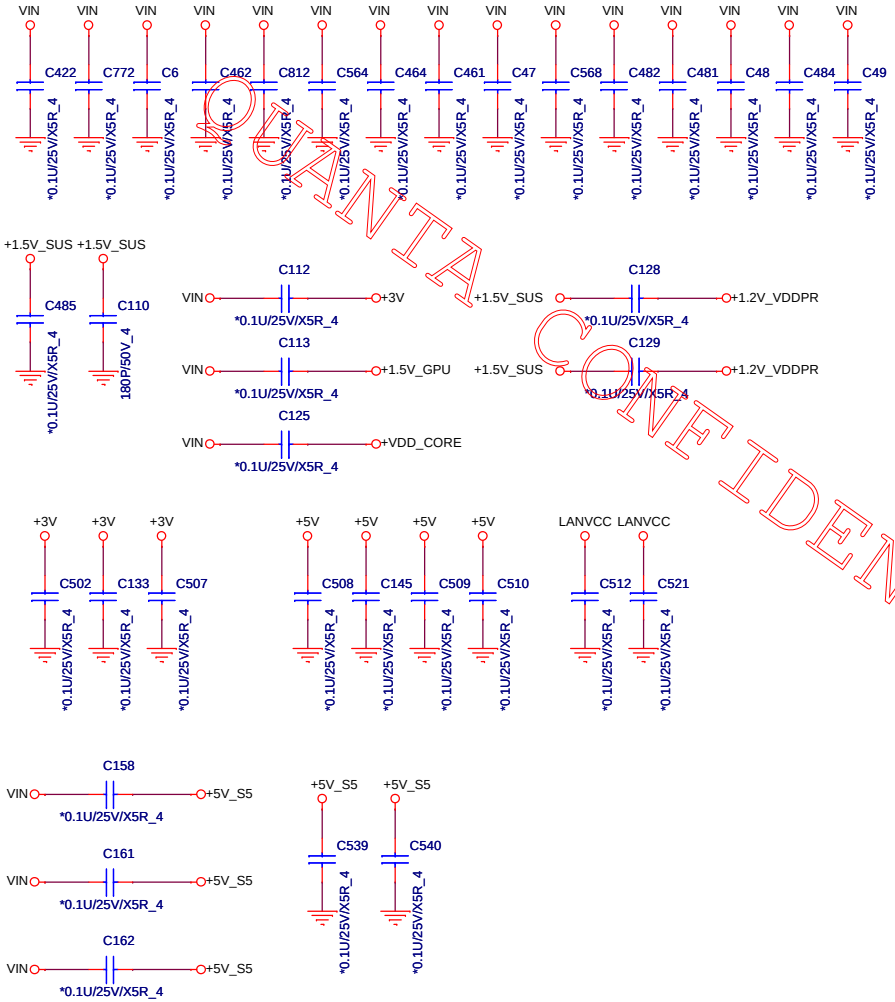

EMI suggestion

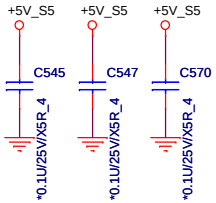

QUANTA CONFIDENTIAL TO ICT FOR REVIEW

PROJECT : LZ2C		
Quanta Computer Inc.		
Size: B	Document Number: ESD solution	Rev: 2A
Date: Monday, January 09, 2012	Sheet 47 of 51	

2011

SDV~SIV

EC NO.	PG.	DATE	PART REFERENCE	DESCRIPTION
EC-A-01	30	08/23	CN21	Change connection form pin19 to pin 5 due to module choose as below #5: Liteon #5&#51: Cyber TAN POP R628 & R629
EC-A-02	26	08/23	C23	C23 change from 0603 to 0402
EC-A-03	4,8	08/23	U2001,U15	DELETE SOME TPS
EC-A-04	4	08/24	U2001	add pull high resistor R2053~R2057 for JTAG signals.
EC-A-05	4	08/24	R2033	reserve R2033 for Test35
EC-A-06	8	08/25	R189	change R189 to 0 ohm
EC-A-07	9	08/25	R280,R286,R292	pull up resistor from +3V to +3V_S5
EC-A-08	23	09/02	U49	U49.1 need connect to +3V to meet D.G.
EC-A-09	35	09/06	U35	move net +3V_GPU_EN_EC to pin 100
EC-A-10	5	09/06	U2001	add C2117 & C2116 & C2118 to improve +VDDNB_CORE ripple
EC-A-11	7	09/06	U15	change port 0 and port 8 setting
EC-A-12	38	09/06	PJP1	change pin define for PJP1
EC-A-13	34	09/06	R28	Pop R28 for K/B ID setting
EC-A-14	8	09/07	G3	Add short pad for RTC
EC-A-15	33	09/26	CN1	add pin5 for CN1
EC-A-16	34	09/26	CN9	change CN9 footprint
EC-A-17	31	10/05	CML3/CML4/CML6/R8406 R8410/R8405/R8409/R8198 R8200	add CML4(CX21SQ2L000) and delete R8406/R8410 for EMI request and CML3/4/6 change footprint to choke-dlw21s-4p add CML3&CML6(CX21SQ2L000) and delete R8405/R8409/R8198/R8200 for EMI request
EC-A-18	34	10/05	CA1~CA6	POP for EMI request
EC-A-19	34	10/05	C2119,C2120	add C2119 for CARDREADER_DET# and C2120 for CARDREADER_RST# from EMI request
EC-A-20	28 30	10/05	C501,C535 C530	change footprint to short pad from EMI request

QUANTA CONFIDENTIAL TO ICH FOR REVIEW

PROJECT : LZ2C

Quanta Computer Inc.

Size	Document Number	Rev
B	EC list1	2A

Date: Monday, January 09, 2012 Sheet 48 of 51

EC NO.	PG.	DATE	PART REFERENCE	DESCRIPTION
EC-A-21	26	10/05	R10/R27	Not support DCR & COLOR_ENGINE from customer request
EC-A-22	26 23 29 29	10/05	Q19,Q20,Q6 Q34,Q35,Q39 Q31,Q36,Q37 Q27,Q28,Q2006	change to dual mosfet Q6 change to dual mosfet Q39 change to dual mosfet Q37 change to dual mosfet Q2006
EC-A-23	31	10/05	C8459	C8459 change to 1uF/10V/0402
EC-A-24	27 30	10/05	C513,C519 C528	change to 4.7uF/6.3V/0603
EC-A-25	15	10/05	U30	change GFX_CORE_CNTRL0/GFX_CORE_CNTRL1 for VBIOS setting
EC-A-26	31 34	10/05	C758 C757	change to 1U/10V/X5R_4
EC-A-27	36	10/06	hloe17	add hole 17
EC-A-28	32/35	10/06	R2498/R2499/R619/R622	reserve R2498/R2499/R619/R622 for EC control FAN
EC-A-29	8	10/06	U15	change dGPU_1.8V_PG to GPIO46
EC-A-30	35	10/06	R368	reserve for GPIO pin
EC-A-31				
EC-A-31				
EC-A-32	34	10/07	C760,C761	POP for EMI request
EC-A-32	35	10/7	C2015	Change from 220p to 22p, POP for EMI request
EC-A-33	27	10/14	C515,C516	Change from 27p to 33p, vendor test result.
EC-A-34	34	10/14	C197,C199,C203	Change from 1000p to 220p, POP for EMI request
EC-A-35	26	10/18	C2	Change from 0.1U to 220p, POP for EMI request
EC-A-36	33	10/14	C353,C355	Change from 10p to 220p, POP for EMI request
EC-B-01	10	11/04	R343	change R343 to power rail from Vin to +15V
EC-B-02	35	11/14	U10	reserve PWR_1V5_SUS_EN&PWR_1V5_SUS_PG:S3.5 funstion
EC-B-03	04	11/18	R2496,R2497	pop for EC can read graphic temp.
EC-B-04	23	11/18	R383,R385 R387,R388 R391,R392 R395,R402	tune resistor to meet AMD spec.

QUANTA CONFIDENTIAL TO ICT FOR REVIEW

PROJECT : LZ2C
Quanta Computer Inc.

Size	Document Number	Rev
Custom	EC list2	2A

Date: Monday, January 09, 2012 Sheet 49 of 51

EC NO.	PG.	DATE	PART REFERENCE	DESCRIPTION
EC-B-06	26	11/18	Q3,Q4,Q65,R23	Delete Q3,Q4 add Q65 and R23 change to 47 ohm
EC-B-07	8	11/18	R309,R312	change to 0 ohm due to non pci device.
EC-B-08	19	11/18		R126 pop & depop C208,C261,Q22,Q23,Q25,Q43,Q44,Q45,Q3040,R156,R157,R175,R492,R494,U3011 for PX5 implement
EC-B-09	30	12/06	D28	reserve to prevent leakage
EC-B-10	31	12/06	U53	remove
EC-B-11	34	12/06	CA3/CA4/C204/C205 C220/C221/C222 C223/C224/C225	CA3,CA4 change to 0402*8(C204,C205,C220,C221,C222,C223,C224,C225)
EC-B-12	7	12/06	R527	reserve for dgpu_pwr_en
EC-B-13	27	12/06		Reserve for Surge Line to GND Gas Tube Discharge
EC-C-01	30 31 33 34	01/03	R2066,C775 R2065,C774 R2061,C771 R2062,C773 R2059,C726 R2060,C770 R2042,C708 R2058,C710	Add resistor(300ohm) and CAP(10PF) to meet AMD spec.

QUANTA CONFIDENTIAL TO ICT FOR REVIEW

PROJECT : LZ3C

Quanta Computer Inc.

Size	Document Number	Rev
Custom	EC list-3	2A

Date: Monday, January 09, 2012 Sheet 50 of 51

SDV-SIV

2011

EC NO.	PG.	DATE	PART REFERENCE	DESCRIPTION
PEC-A-01	38,39, 40,41, 42	09/21	PJP4,PJP5,PJP6, PJP7,PJP8,PJP9,PJP32, PJP33,PJP34,PJP35, PJP36,PJP26,PJP29, PJP16,PJP17,PJP31	Change open pad to short pad.
PEC-A-02	38,39, 40,41, 43,44	09/22	PC20,PC21,PC28,PC29, PC30,PC42,PC43,PC44, PC45,PC69,PC70,PC403, PC404,PC420,PC421, PC503,PC504,PC514, PC532,PC533,PC547, PC548,PC318,PC319, PC335,PC336	Change MLCC 10UF size from 1206 to 0805.
PEC-A-03	38	09/22	PR32,PR37,PR71, PR78,PR74	Adjust AC plug-in detect function.
PEC-A-04	39	09/22	PR81,PR82	PR81,PR82 change from 140K to 121K for 3V/5V OCP.
PEC-A-05	40	09/22	PR100	PR100 change from 124K to 82.5K for 1.5VSUS OCP.
PEC-A-06	41	09/22	PR440,PR444,PL20	PR440 change from 180K to 75K for 1.1V_DAUL OCP. PR440 change from 0 ohm to 2.2 ohm for improve ringing voltage. PL20 change from 1uH to 2.2uH for improve ripple.
PEC-A-07	42	09/22	PR455,PR458,PL21, PC440	PR458 change from 100K to 75K for 1.1V_DAUL OCP. PR455 change from 0 ohm to 2.2 ohm for improve ringing voltage. PL21 change from 1uH to 2.2uH for improve ripple. add PC440 2200P cap for improve 1.2V output noise.
PEC-A-08	43	09/22	PU501	Change PU501 driver IC size from 3*3 to 2*2.
PEC-A-09	43	09/22	PR508,PR525,PR533, PR534,PR551,PR550, PR566,PR558,PC509	Adjust VDD/NB core load line/OCP/OTP function.
PEC-A-10	44	09/22	PR347,PC330, PC327,PR350	Adjust GFX core OCP function.
PEC-A-11	44	09/22		Change GFX core power budget for ATI Seymojr XT(15w).
PEC-A-12	45	09/08	PU9	Change from MAINON to DGPU_1V_PG
PEC-A-13	45	09/22	PR471	add pull high resistor PR471 for DGPU_1.8V_PG.
PEC-A-14	44	09/26	PC341	Reduce 1pcs GFX core 7343 size output Cap for ATI Seymojr XT(15w).
PEC-A-15	43	09/26	PL502,PL503	Change VDD core choke footprint for SMT request.
PEC-A-16	38	09/26	PQ26	Delete AO4427 MOSFET from BOM source.
PEC-A-17	38	09/29	PQ701,PR701,PQ731, PR65,PR60,PR26,PR66, PR9004,PR9005,	Adjust Battery discharge function.
PEC-A-18	38	09/29	EL5	add charger input bead for EMI.
PEC-A-19	37,38, 39,40, 41,42, 45,46,	10/04	PC429,PC408,PC399 PC393,PC81,PC431 PC435,PC392,PC396 PC60,PC41,PC398,PC395 PC85,PC58,PC78,PC86 PC359,PC353,PC128 PC123	Change P/N from CH4104K9B03 to CH41002KB93.
PEC-A-20	38	10/04	PD5,PD8,PD2 PD6,PD7,PD9002	Change P/N from BC1SS355Z07 to BC1SS355Z21.
PEC-A-21	39	10/04	PC46	Change P/N from CH61001ME96 to CH6102K9A01.
PEC-A-22	39	10/04	PC56,PC59	Change P/N from CH5472K9A02 to CH5472M9901.
PEC-A-23	40,41, 42,45, 46	10/04	PC74,PC72,PC127 PC122,PC126,PC121 PC412,PC351,PC430 PC348,PC350,PC365 PC358,PC349,PC357 PC352,PC366	Change P/N from CH61001ME96 to CH6101M9905.
PEC-A-24	42,45, 46	10/04	PQ155,PQ91,PQ157	Change P/N from BA039040019 to BA0390400H0.
PEC-A-25	44	10/04	PR360	Change P/N from CS37682FB00 to CS37872FB15.
PEC-A-26	37,44, 45,46	10/17	PQ123,PQ124,PQ125, PQ126,PQ139,PQ140, PQ82,PQ102,PQ101, PQ85,PQ118,PQ119 PQ88,PQ90,PQ87,PQ89 PQ94,PQ95	change to dual mosfet.
PEC-A-27	44	10/20	PC327	POP for power request.
PEC-B-01	38	11/18	PR64	Adjust Battery discharge function.
PEC-B-02	38	11/22	PR35	Change footprint from RC0603 to RC1206.

QUANTA CONFIDENTIAL TO ICT FOR REVIEW

PROJECT : LZ2C
Quanta Computer Inc.
Size: Custom | Document Number: PEC list1 | Rev: 2A
Date: Monday, January 09, 2012 | Sheet 51 of 51