www.rosefix.com

Compal Confidential

Model Name :
File Name : LA-8671P

Compal Confidential

TN-Note Schematic Document

2012-07-27

REV:1.0_0727A

Security Classification	Compal Secret Data			Compal Electronics, Inc.		
Issued Date	2010/08/25	Deciphered Date	2012/08/25	Title	Cover Page	
				Size Custom	Document Number LA-8671P_SDV	Rev 1.0
				Date: Friday, July 27, 2012	Sheet 1 of 50	

THIS SHEET OF ENGINEERING DRAWING IS THE PROPRIETARY PROPERTY OF COMPAL ELECTRONICS, INC. AND CONTAINS CONFIDENTIAL AND TRADE SECRET INFORMATION. THIS SHEET MAY NOT BE TRANSFERED FROM THE CUSTODY OF THE COMPETENT DIVISION OF R&D DEPARTMENT EXCEPT AS AUTHORIZED BY COMPAL ELECTRONICS, INC. NEITHER THIS SHEET NOR THE INFORMATION IT CONTAINS MAY BE USED BY OR DISCLOSED TO ANY THIRD PARTY WITHOUT PRIOR WRITTEN CONSENT OF COMPAL ELECTRONICS, INC.

Compal Confidential

Model Name : TN-Note
File Name : Block Diagram

www.cosel-tw.com

UCPU1 CPU8@ 1.8G SA00005L5H0 | UCPU1 CPU3@ 1.7G SA00005K6I0 | UCPU1 CPU4@ 1.8G SA00005L9F0 | UCPU1 CPU5@ 1.9G SA00005K5E0 | UCPU1 CPU6@ 1.4G SA00005UH60

ZZZ DAZ0HPP00200

U5006 U5009 U5008 U5007 — DDR2@ ELIPDA 8G SA000058U20

UD1 UD2 UD3 UD4 — DDR2@ ELIPDA 8G SA000058U20

ZZZ1 X76E4G@ ELPIDA 4G X7639839LD7 | ZZZ2 X76H4G@ HYNIX 4G X7639839L08 | ZZZ3 X76S4G@ SAMSUNG 4G X7639839L09

R5049 R267 R1944 R5066 — DDR2@ 10K 0402 5% SD028100280

ZZZ4 X76E2G@ ELPIDA 2G X7639839LT0 | ZZZ5 X76H2G@ HYNIX 2G X7639839LT1

```
CPU2@   SA00005L5H0  S IC AV8063801058401 SR0N9 L1 1.8G A39!
CPU3@   SA00005K6I0  S IC AV8063801058002 SR0N8 L1 1.7G A39!
CPU4@   SA00005L9F0  S IC AV8063801057801 SR0N7 L1 1.8G A39!
CPU5@   SA00005K5E0  S IC AV8063801057605 SR0N6 L1 1.9G A39!
CPU6@   SA00005UH60  S IC AV8062701313000 SR0U3 J1 1.4G A39!
```

Sub-board

1. PWR Board (LS-8671P)
2. HDD Board (LS-8672P)
3. P-Sensor1 Board (LS-8673P)
4. P-Sensor2 Board (LS-8674P)

Intel Ivy Bridge BGA — P. 04~09

Single Channel DDR3-1333(1.5V) → DDR3 Chip x8 — P. 10~11

FDI, DMI

Intel Panther Point — P. 12~20

LVDS Conn. — P. 23 (LVDS)

mHDMI Conn. — P. 24 (HDMI)

mDP Conn. — P. 25 (DP)

2-Ch. SPK Conn. — P. 28 (HDA)

Audio Codec ALC3202 — P. 28 (DMIC, HDA)

Combo Jack Conn. — P. 29

USB 3.0 Conn. - L — P. 26 (USB3.0, USB 2.0)

USB 3.0 Conn. - R — P. 27 (USB3.0)

PWR/B

ALS (PWR/B Conn.) CM3218 — P. 37

Sensor Hub STM32F103CBU6TR — P. 21 (USB2.0)

Accelerometer & eCompass LSM303DLHCTR — P. 21

Gyro L3GD20TR — P. 21

Touch Panel (LVDS Conn.) — P. 23 (SATA)

Camera & DMIC (LVDS Conn.) — P. 23 (DMIC)

Card Reader RTS5229 — P. 22 (1X)

LAN RTL8111F — P. 30 (1X)

RJ45 Conn. — P. 31

mini PCI-E Half Card Conn. WLAN & BT — P. 32 (PCI-E, WLAN 1X, USB(BT))

BIOS ROM (8M+4M) — P. 12 (SPI)

TPM — P. 36 (LPC)

EC ENE KB9012 — P. 34

APS LIS34ALTR — P. 33

Int.KBD — P. 35

Click Pad — P. 35

Track Point — P. 35

Thermal Sensor Fintek 75303M — P. 33

mini PCI-E Full Card Conn. WWAN/mSATA — P. 32 (WWAN, mSATA)

SIM Conn. — P. 32

HDD BTB Conn. — P. 36 (PCH_GPIO)

P-Sensor1 Conn.

HDD/B

PCH_GPIO → P-Sensor2 Conn.

P-Sensor2/B (Left)

Security Classification	Compal Secret Data		Compal Electronics, Inc.
Issued Date	2010/08/25	Deciphered Date 2012/08/25	Title: PT-Note Block Diagram
Size: Custom	Document Number: LA-8671P_SDV		Rev: 1.0
Date: Friday, July 27, 2012	Sheet 2 of 50		

THIS SHEET OF ENGINEERING DRAWING IS THE PROPRIETARY PROPERTY OF COMPAL ELECTRONICS, INC. AND CONTAINS CONFIDENTIAL AND TRADE SECRET INFORMATION. THIS SHEET MAY NOT BE TRANSFERED FROM THE CUSTODY OF THE COMPETENT DIVISION OF R&D DEPARTMENT EXCEPT AS AUTHORIZED BY COMPAL ELECTRONICS, INC. NEITHER THIS SHEET NOR THE INFORMATION IT CONTAINS MAY BE USED BY OR DISCLOSED TO ANY THIRD PARTY WITHOUT PRIOR WRITTEN CONSENT OF COMPAL ELECTRONICS, INC.

www.laptopschematic.com

Voltage Rails

Power plane / State	+B	+5VALW +3VALW	+1.5V	+3VM +1.05VM	+5VS +3VS +1.8VS +1.5VS +1.05VS +VCC_GFXCORE_AXG +CPU_CORE +VCCSA +0.75VS
S0	O	O	O	O	O
S3	O	O	O	O	X
M3	O	O	O	O	X
S4/S5 - AC	O	O	X	X	X
S4/S5 - BATT ONLY	O	X	X	X	X
S4/S5 - NO AC & BATT	X	X	X	X	X

STATE \ SIGNAL	SLP_S3#	SLP_S4#	SLP_S5#	+VALW	+V	+VS
Full ON	H	H	H	ON	ON	ON
S3 (Suspend to RAM)	L	H	H	ON	ON	OFF
S4 (Suspend to Disk)	L	L	H	ON	OFF	OFF
S5 (Soft OFF)	L	L	L	ON	OFF	OFF

BOARD ID Table

Board ID	PCB Revision
0	0.1
1	0.2
2	0.3
3	0.4
4	0.5
5	
6	
7	

EC SM Bus1 address

Device	Address	HEX
Smart Battery	0001-011xb	16H
Charger	0001-0010b	12H

EC SM Bus2 address

Device	Address	HEX
Thermal sensor	1001-101x b	9AH
PCH (SML1DATA / GPIO75)	1001-0110 b	96H

SM Bus Controller

Device	Address	HEX
Security Rom	1010-100x b	A8 H
DDR DIMM0	1010-000x b	A0 H

SM Bus Controller 0

Device	Address	HEX
No-use	No-use	No-use

Sensor HUB

Device	Address	HEX
ALS	0100-100x b	48h
APS	0011-001x b	32h
Gyroscope	0110-101xb	6Ah
e-Compass	0011-110x b	3Ch

BOM Structure

	SDV	FVT	SIT	SVT	SOVP
@ : No Stuff					
ME@ : ME components					
CPUx@ : CPU SKU	V	V	V	V	
DDRx@ : RAM SKU	V	V	V	V	
SBA@ : SBA	V	V	V	V	
NOSBA@ : NO SBA					
ID4@ : Intel Deep S4	V				
AOAC@ : AOAC	V	V	V	V	
TPM@ : TPM		V	V	V	
Short@ : 0ohm short pad					

USB3.0	USB2.0	NOTE
1	0	
2	1 *	USB3.0/2.0 Conn
3	2	USB3.0/2.0 Conn
4	3	
	4	Sensor Hub
	5	USB Camera
	6	X
	7	X
	8	Touch Panel
	9 *	WWAN
	10	WLAN
	11	Finger Printer**
	12	
	13	Bluetooth**

* Debug Port

** Not Use

Security Classification	Compal Secret Data		
Issued Date	2011/05/16	Deciphered Date	2013/05/16

THIS SHEET OF ENGINEERING DRAWING IS THE PROPRIETARY PROPERTY OF COMPAL ELECTRONICS, INC. AND CONTAINS CONFIDENTIAL AND TRADE SECRET INFORMATION. THIS SHEET MAY NOT BE TRANSFERED FROM THE CUSTODY OF THE COMPETENT DIVISION OF R&D DEPARTMENT EXCEPT AS AUTHORIZED BY COMPAL ELECTRONICS, INC. NEITHER THIS SHEET NOR THE INFORMATION IT CONTAINS MAY BE USED BY OR DISCLOSED TO ANY THIRD PARTY WITHOUT PRIOR WRITTEN CONSENT OF COMPAL ELECTRONICS, INC.

Compal Electronics, Inc.

Title: Cover Sheet

Size: Custom | Document Number: LA-8671P_SDV | Rev: 1.0

Date: Friday, July 27, 2012 | Sheet 3 of 50

www.rosefix.com

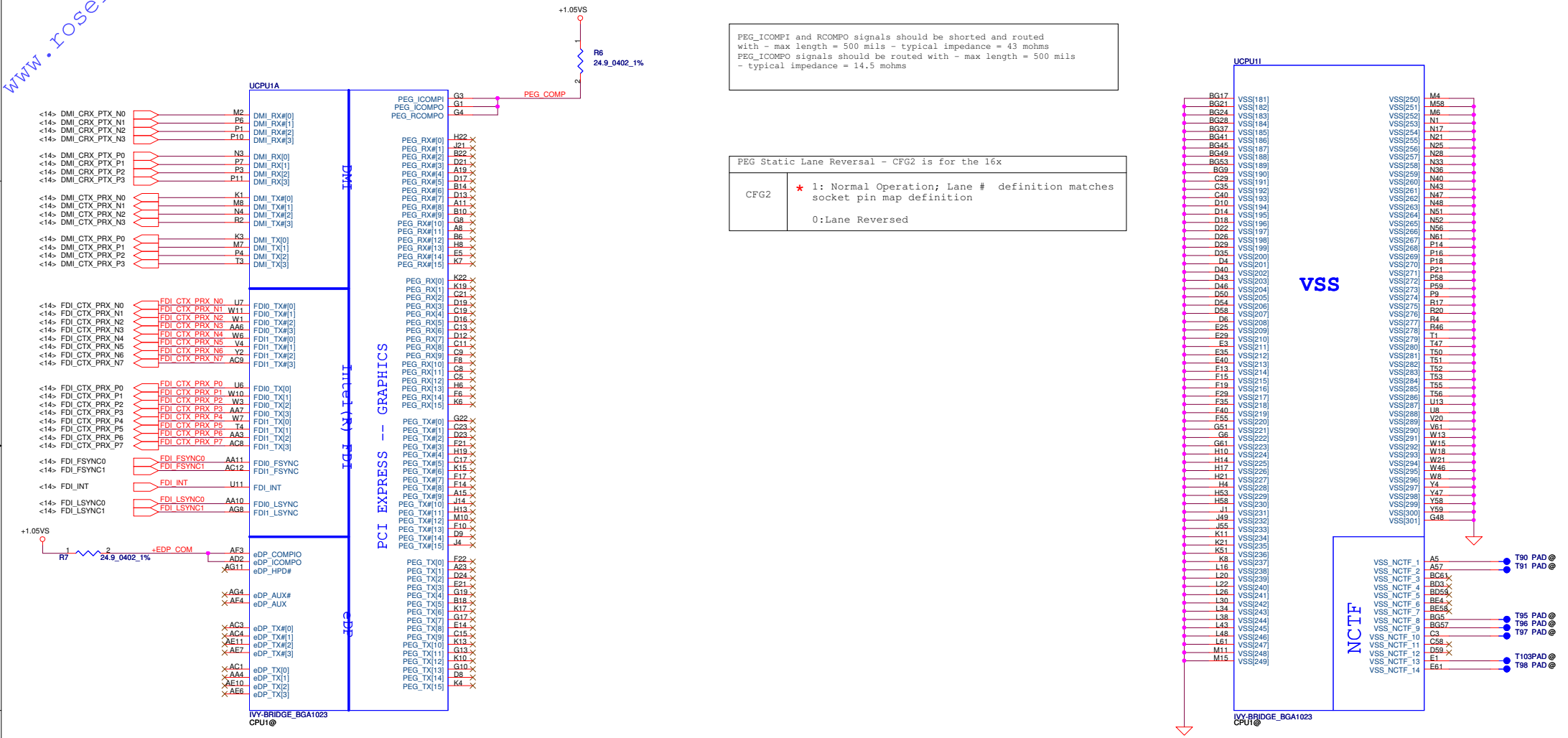

Security Classification	Compal Secret Data		
Issued Date	2011/05/16	Deciphered Date	2013/05/16

THIS SHEET OF ENGINEERING DRAWING IS THE PROPRIETARY PROPERTY OF COMPAL ELECTRONICS, INC. AND CONTAINS CONFIDENTIAL AND TRADE SECRET INFORMATION. THIS SHEET MAY NOT BE TRANSFERED FROM THE CUSTODY OF THE COMPETENT DIVISION OF R&D DEPARTMENT EXCEPT AS AUTHORIZED BY COMPAL ELECTRONICS, INC. NEITHER THIS SHEET NOR THE INFORMATION IT CONTAINS MAY BE USED BY OR DISCLOSED TO ANY THIRD PARTY WITHOUT PRIOR WRITTEN CONSENT OF COMPAL ELECTRONICS, INC.

Compal Electronics, Inc.

Title: PROCESSOR(1/6) DMI,FDI,PEG

Size	Document Number	Rev
Custom	LA-8671P_SDV	1.0

Date: Friday, July 27, 2012 Sheet 4 of 50

www.rosefix.com

PROC_DETECT (Processor Detect): pulled to ground on the processor package. There is no connection to the processor silicon for this signal. System board designers may use this signal to determine if the processor is present

UCPU1B

MISC
- <17> H_SNB_IVB# → F49 PROC_SELECT#
- C57 PROC_DETECT# → R11 2 1 10K_0402_5% @ → +1.05VS

THERMAL
- PAD~D T1 @ → H_CATERR# → C49 CATERR#
- <17,34> H_PECI → A48 PECI
- <34> H_PROCHOT# → R15 56_0402_5% → H_PROCHOT#_R → C45 PROCHOT#
- <17> H_THERMTRIP# → H_THERMTRIP# → D45 THERMTRIP#

PWR MANAGEMENT
- <14> H_PM_SYNC → C48 PM_SYNC
- <17> H_CPUPWRGD → R14 0_0402_5% stuff@ → H_CPUPWRGD_R → B46 UNCOREPWRGOOD
- R28 10K_0402_5% → +1.05VS
- C5236 @ 100P_0402_50V8J
- ESD C Reserve
- R29 130_0402_1% → VDDPWRGOOD_R → BE45 SM_DRAMPWROK
- BUF_CPU_RST# → D44 RESET#

CLOCKS
- BCLK J3 CLK_CPU_DMI_R 33_0402_5% R8 → CLK_CPU_DMI <13>
- BCLK# H2 CLK_CPU_DMI#_R 33_0402_5% R12 → CLK_CPU_DMI# <13>
- DPLL_REF_CLK AG3 R9 1K_0402_5%
- DPLL_REF_CLK# AG1 R10 1K_0402_5% → +1.05VS

DDR3 MISC
- SM_DRAMRST# AT30 H_DRAMRST# → H_DRAMRST# <6>
- SM_RCOMP[0] BF44 SM_RCOMP0 140_0402_1% R16
- SM_RCOMP[1] BF43 SM_RCOMP1 25.5_0402_1% R17
- SM_RCOMP[2] BG43 SM_RCOMP2 200_0402_1% R18
- DDR3 Compensation Signals
- @ C82 100P_0402_50V8J
- ESD C Reserve

JTAG & BPM
- PRDY# N53 XDP_PRDY#
- PREQ# N55 XDP_PREQ#
- TCK L56 XDP_TCK
- TMS L55 XDP_TMS
- TRST# J58 XDP_TRST#
- TDI M60 XDP_TDI
- TDO L59 XDP_TDO
- DBR# K58 ← R27 1K_0402_5% ← +3VS
- DBR# → XDP_DBRESET# → XDP_DBRESET# <12,14>
- BPM[0] G58 XDP_BPM#0
- BPM[1] E55 XDP_BPM#1
- BPM[2] E59 XDP_BPM#2
- BPM[3] G55 XDP_BPM#3
- BPM[4] G59 XDP_BPM#4
- BPM[5] H60 XDP_BPM#5
- BPM[6] J59 XDP_BPM#6
- BPM[7] J61 XDP_BPM#7

IVY-BRIDGE_BGA1023
CPU1@

PU/PD for JTAG signals
- +1.05VS
- XDP_TMS R20 51_0402_5%
- XDP_TDI R21 51_0402_5%
- XDP_TDO R22 51_0402_5%
- XDP_TCK R24 51_0402_5%
- XDP_TRST# R25 51_0402_5%

JDB1 (ACES_88717-2601 ME@)
- XDP_PREQ#
- XDP_PRDY#
- H_CPUPWRGD R52 1K_0402_1%
- R531 0_0402_5%
- R54 1K_0402_1%
- R397 0_0402_5%
- R389 0_0402_5% CLK_XDP_CLK_R
- R400 0_0402_5% CLK_XDP_CLK#_R
- <12,14,34> PBTN_OUT#
- <7> XDP_CFG0
- <14> SYS_PWROK
- <13> CLK_XDP_CLK
- <13> CLK_XDP_CLK#
- +1.05VS
- PCH_PLTRST# R55 1K_0402_1%
- XDP_DBRESET#
- XDP_TDO
- XDP_TRST#
- XDP_TDI
- XDP_TMS
- XDP_TCK
- C5237 0.1U_0402_16V4Z @
- ESD R532, C39 Reserve

+3VALW
- C33 @ 0.1U_0402_16V4Z
- +3VS
- R31 @ 10K_0402_5%
- U1 @ 74AHC1G09GW_TSSOP5
- <14> PM_DRAM_PWRGD
- PM_SYS_PWRGD_BUF
- +1.5V_CPU_VDDQ
- R30 200_0402_5%
- R33 @ 39_0402_5%
- R532 0_0402_5%
- <9> RUN_ON_CPU1.5VS3#
- RUN_ON_CPU1.5VS3#
- Q4 @ 2N7002K_SOT23-3

Buffered reset to CPU
- +3VS
- +1.05VS
- C34 0.1U_0402_16V4Z
- R32 75_0402_5%
- R34 @ 43_0402_5%
- U3 SN74LVC1G07DCKR_SC70-5
- BUF_CPU_RST#
- BUFO_CPU_RST#
- PCH_PLTRST#
- PCH_PLTRST# <16,36>
- C38 @ 0.1U_0402_16V4Z

Security Classification	Compal Secret Data		
Issued Date	2011/05/16	Deciphered Date	2013/05/16

THIS SHEET OF ENGINEERING DRAWING IS THE PROPRIETARY PROPERTY OF COMPAL ELECTRONICS, INC. AND CONTAINS CONFIDENTIAL AND TRADE SECRET INFORMATION. THIS SHEET MAY NOT BE TRANSFERED FROM THE CUSTODY OF THE COMPETENT DIVISION OF R&D DEPARTMENT EXCEPT AS AUTHORIZED BY COMPAL ELECTRONICS, INC. NEITHER THIS SHEET NOR THE INFORMATION IT CONTAINS MAY BE USED BY OR DISCLOSED TO ANY THIRD PARTY WITHOUT PRIOR WRITTEN CONSENT OF COMPAL ELECTRONICS, INC.

Compal Electronics, Inc.

Title: PROCESSOR(2/6) PM,XDP,CLK

Size	Document Number	Rev
Custom	LA-8671P_SDV	1.0

Date: Friday, July 27, 2012 Sheet 5 of 50

www.rosefix.com

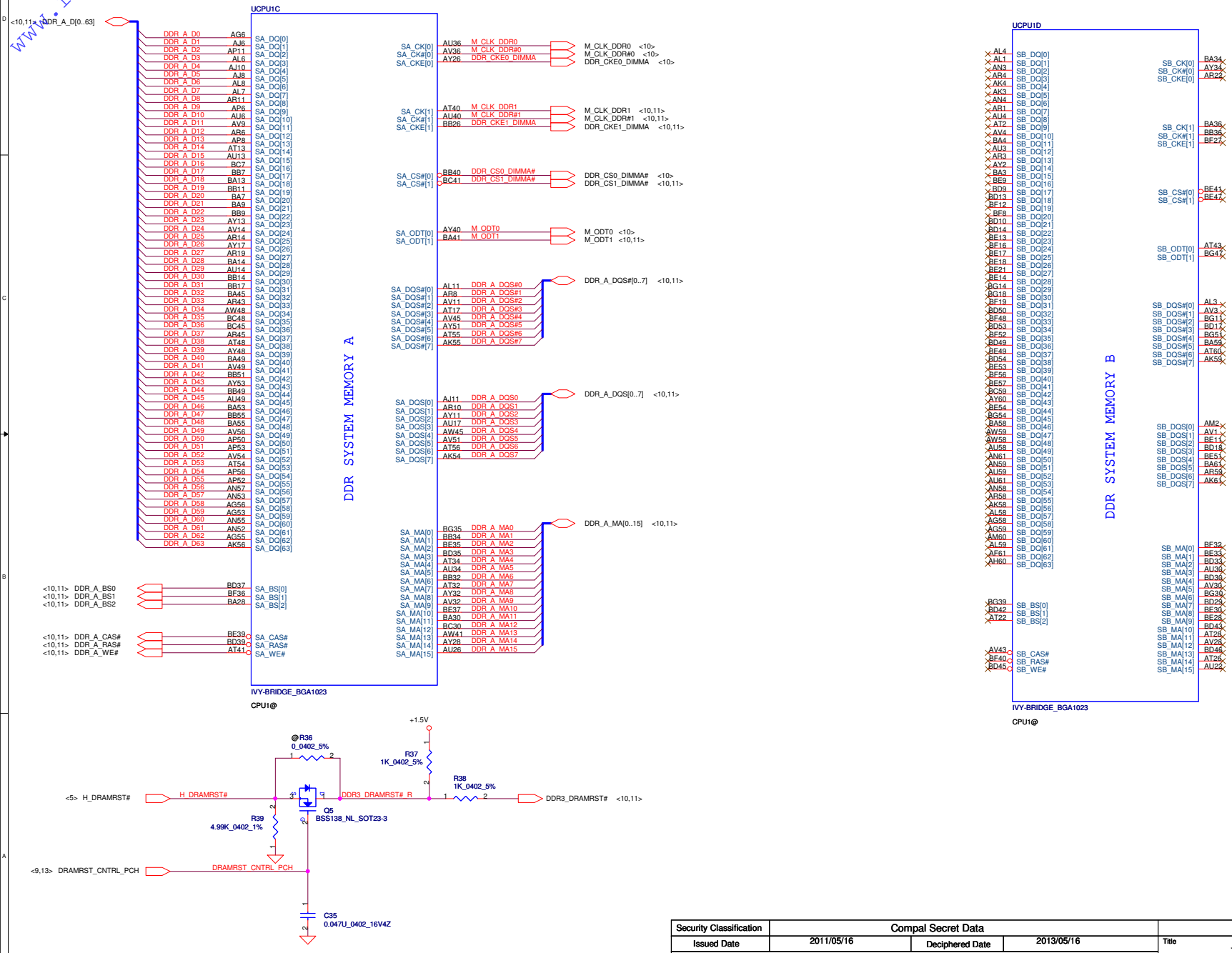

Security Classification	Compal Secret Data		
Issued Date	2011/05/16	Deciphered Date	2013/05/16

THIS SHEET OF ENGINEERING DRAWING IS THE PROPRIETARY PROPERTY OF COMPAL ELECTRONICS, INC. AND CONTAINS CONFIDENTIAL AND TRADE SECRET INFORMATION. THIS SHEET MAY NOT BE TRANSFERED FROM THE CUSTODY OF THE COMPETENT DIVISION OF R&D DEPARTMENT EXCEPT AS AUTHORIZED BY COMPAL ELECTRONICS, INC. NEITHER THIS SHEET NOR THE INFORMATION IT CONTAINS MAY BE USED BY OR DISCLOSED TO ANY THIRD PARTY WITHOUT PRIOR WRITTEN CONSENT OF COMPAL ELECTRONICS, INC.

Compal Electronics, Inc.

Title: PROCESSOR(3/6) DDRIII

Size	Document Number	Rev
Custom	LA-8671P_SDV	1.0

Date: Friday, July 27, 2012 | Sheet 6 of 50

www.rosefix.com

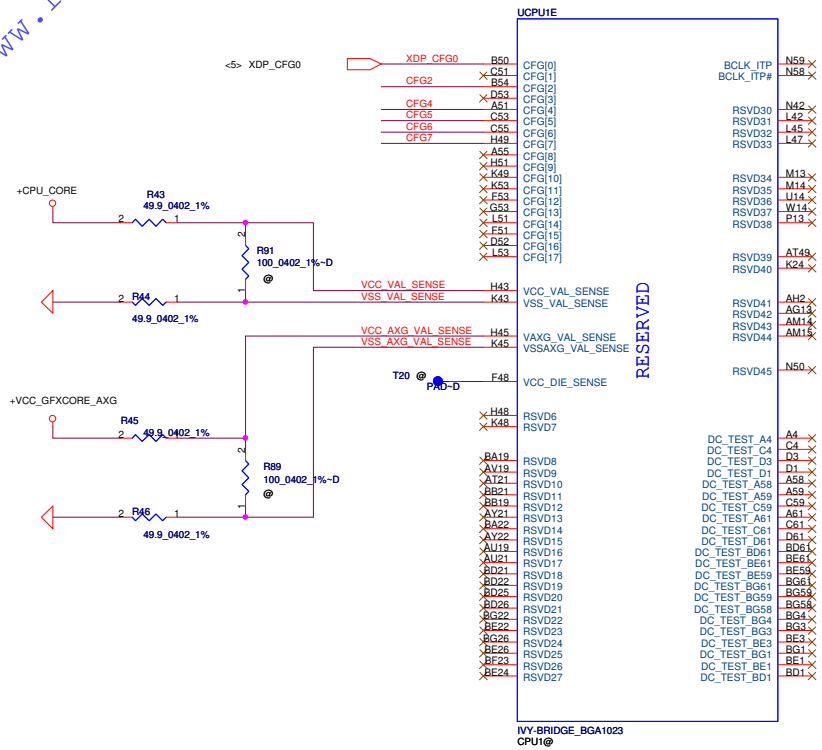

CFG Straps for Processor

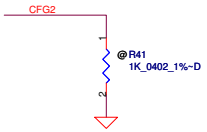

PEG Static Lane Reversal - CFG2 is for the 16x	
CFG2	*1:(Default) Normal Operation; Lane # definition matches socket pin map definition 0:Lane Reversed

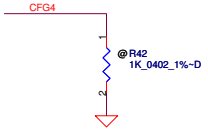

Display Port Presence Strap	
CFG4	* 1 : Disabled; No Physical Display Port attached to Embedded Display Port 0 : Enabled; An external Display Port device is connected to the Embedded Display Port

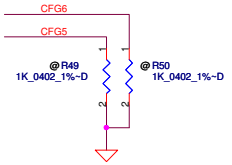

PCIE Port Bifurcation Straps	
CFG[6:5]	*11: (Default) x16 - Device 1 functions 1 and 2 disabled 10: x8, x8 - Device 1 function 1 enabled ; function 2 disabled 01: Reserved - (Device 1 function 1 disabled ; function 2 enabled) 00: x8,x4,x4 - Device 1 functions 1 and 2 enabled

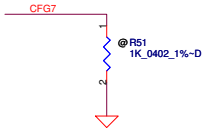

PEG DEFER TRAINING	
CFG7	*1: (Default) PEG Train immediately following xxRESETB de assertion 0: PEG Wait for BIOS for training

Security Classification	Compal Secret Data		
Issued Date	2011/05/16	Deciphered Date	2013/05/16

THIS SHEET OF ENGINEERING DRAWING IS THE PROPRIETARY PROPERTY OF COMPAL ELECTRONICS, INC. AND CONTAINS CONFIDENTIAL AND TRADE SECRET INFORMATION. THIS SHEET MAY NOT BE TRANSFERED FROM THE CUSTODY OF THE COMPETENT DIVISION OF R&D DEPARTMENT EXCEPT AS AUTHORIZED BY COMPAL ELECTRONICS, INC. NEITHER THIS SHEET NOR THE INFORMATION IT CONTAINS MAY BE USED BY OR DISCLOSED TO ANY THIRD PARTY WITHOUT PRIOR WRITTEN CONSENT OF COMPAL ELECTRONICS, INC.

Compal Electronics, Inc.

Title: PROCESSOR(4/6) RSVD,CFG

Size	Document Number	Rev
Custom	LA-8671P_SDV	1.0

Date: Friday, July 27, 2012 | Sheet 7 of 50

www.rosefix.com

CPU_CORE
GFX_CORE
VCCP1.05

VGA_CORE
All Capacitor place on Power side.

POWER

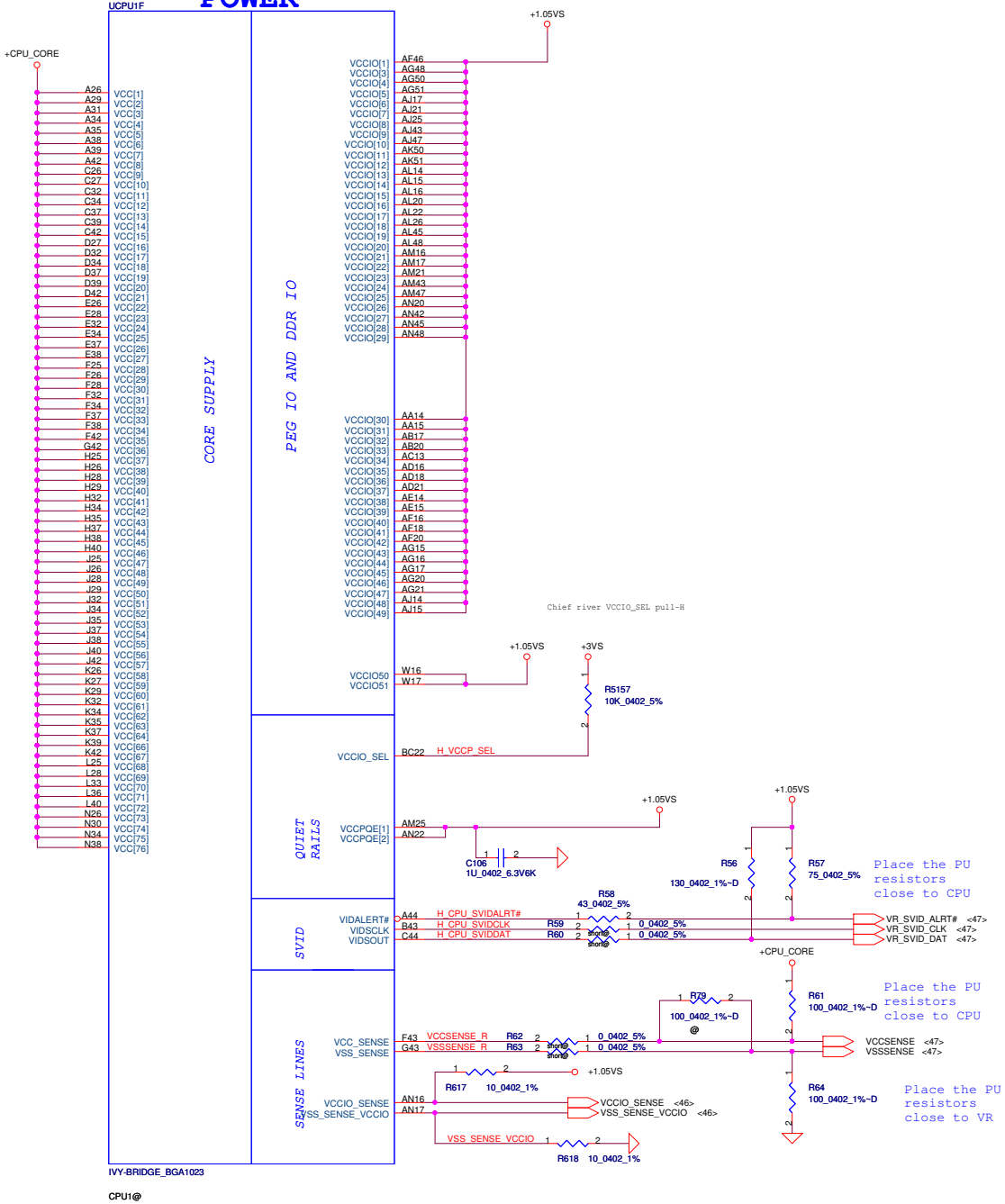

Security Classification	Compal Secret Data		
Issued Date	2011/05/16	Deciphered Date	2013/05/16

THIS SHEET OF ENGINEERING DRAWING IS THE PROPRIETARY PROPERTY OF COMPAL ELECTRONICS, INC. AND CONTAINS CONFIDENTIAL AND TRADE SECRET INFORMATION. THIS SHEET MAY NOT BE TRANSFERED FROM THE CUSTODY OF THE COMPETENT DIVISION OF R&D DEPARTMENT EXCEPT AS AUTHORIZED BY COMPAL ELECTRONICS, INC. NEITHER THIS SHEET NOR THE INFORMATION IT CONTAINS MAY BE USED BY OR DISCLOSED TO ANY THIRD PARTY WITHOUT PRIOR WRITTEN CONSENT OF COMPAL ELECTRONICS, INC.

Compal Electronics, Inc.

Title: PROCESSOR(5/6) PWR,BYPASS

Size	Document Number	Rev
Custom	LA-8671P_SDV	1.0

Date: Friday, July 27, 2012 | Sheet 8 of 50

www.rosefix.com

POWER

M3 Support

R86 0_0402_5% — Q2204 BSS138_NL_SOT23-3 — +V_DDR_REFA_R — +VREF0 — DRAMRST_CNTRL_PCH — DRAMRST_CNTRL_PCH <6,13>

Follw G-Series

<39,46> SUSP — R65 0_0402_5% — +3VALW — R67 100K_0402_5% — RUN_ON_CPU1.5VS3#

<34> CPU1.5V_S3_GATE — R71 0_0402_5% — Q6 2N7002K_SOT23-3

<34,39,42,44,46> SUSP# — R70 0_0402_5%

+1.5V — PAD-OPEN 4x4m — +1.5V_CPU_VDDQ

+VSB — R68 82K_0402_5% — U7 AO4430L_SO8 — R175 15K_0402_1% — R69 330K_0402_5% — C108 0.047U_0603_25V7K — RUN_ON_CPU1.5VS3 — Q8 2N7002K_SOT23-3 — RUN_ON_CPU1.5VS3# <5>

R66 220_0402_5% — C107 0.1U_0402_10V6K — Q7 2N7002K_SOT23-3 — RUN_ON_CPU1.5VS3#

+VCC_GFXCORE_AXG

UCPU1G

VAXG[1..56] — GRAPHICS

VREF: SM_VREF AY43 — +V_SM_VREF_CNT; SA_DIMM_VREFDQ BF7 — +V_DDR_REFA_R; SB_DIMM_VREFDQ BG7 — +V_DDR_REFB_R

+V_SM_VREF should have 20 mil trace width

+1.5V_CPU_VDDQ — R98 1K_0402_1%~D — R92 1K_0402_1%~D — C115 0.1U_0402_16V4Z — @R173 1K_0402_1%~D — @R129 1K_0402_1%~D

R72 0_0402_5% — Q11 AO3414_SOT23-3 — +V_SM_VREF — RUN_ON_CPU1.5VS3

+1.5V — @R73 1K_0402_1%~D — @R75 1K_0402_1%~D

DDR3 - 1.5V RAILS

VDDQ[1..26] — AJ28, AJ33, AJ36, AJ40, AL30, AL34, AL38, AL42, AM33, AM36, AM40, AN30, AN34, AN38, AR26, AR28, AR30, AR32, AR34, AR36, AR40, AV41, AW26, BA40, BB28, BG33

+1.5V_CPU_VDDQ — C132 330U_D2_2VM_R9M — C124 10U_0603_6.3V6M — C125 10U_0603_6.3V6M — C131 10U_0603_6.3V6M — C135 10U_0603_6.3V6M — C134 10U_0603_6.3V6M — C133 10U_0603_6.3V6M — C137 10U_0603_6.3V6M — C136 10U_0603_6.3V6M

C138 1U_0402_6.3V6K — C140 1U_0402_6.3V6K — C141 1U_0402_6.3V6K — C142 1U_0402_6.3V6K — C143 1U_0402_6.3V6K — C144 1U_0402_6.3V6K — C146 1U_0402_6.3V6K — C148 1U_0402_6.3V6K — C145 1U_0402_6.3V6K

+VCC_GFXCORE_AXG

R620 100_0402_1%~D — R88 100_0402_1%~D

<47> VCC_AXG_SENSE — VCC_AXG_SENSE — VAXG_SENSE F45

<47> VSS_AXG_SENSE — VSS_AXG_SENSE — VSSAXG_SENSE G45

SENSE LINES

+1.8VS — R619 100_0402_1%~D

VCCPLL[1..3] — BB3, BC1, BC4

1.8V RAIL

C153 10U_0603_6.3V6M-D — C154 1U_0402_6.3V6K-D — C195 1U_0402_6.3V6K-D — C153 10U_0603_6.3V6M-D — C154 1U_0402_6.3V6K-D — C195 1U_0402_6.3V6K-D

QUIET RAILS

VCCDQ[1] AM28, VCCDQ[2] AN26 — +1.5V_CPU_VDDQ — C149 1U_0402_6.3V6K

+1.5V_CPU_VDDQ — C150 0.1U_0402_10V7K-D — C151 0.1U_0402_10V7K-D — C152 0.1U_0402_10V7K-D — C157 0.1U_0402_10V7K-D — +1.5V

VDDQ_SENSE BC43 — VSS_SENSE_VDDQ BA43

+VCCSA — C158 330U_D2_2VM_R9M~D — C122 10U_0603_6.3V6M-D — C161 10U_0603_6.3V6M-D — C159 10U_0603_6.3V6M-D — C160 10U_0603_6.3V6M-D — C163 10U_0603_6.3V6M-D

VCCSA[1..16] — L17, L21, N16, N20, N22, P17, P20, R16, R18, R21, U15, V16, V17, V18, V21, W20

SA RAIL

SENSE LINES

VCCSA_SENSE U10 — +VCCSA_SENSE <45> — @ R78 0_0402_5%~D

VCCSA VID lines

VCCSA_VID[0] D48, VCCSA_VID[1] D49

VID[0]	VID[1]	ULV	2011	2012
0	0	0.90 V	Yes	Yes
0	1	0.85 V	Yes	Yes
1	0	0.775 V	No	Yes
1	1	0.75 V	No	Yes

R99 0_0402_5% — H_VCCSA_VID0 <45> — H_VCCSA_VID1 <45> — R100 0_0402_5%

C164 1U_0402_6.3V6K — C165 1U_0402_6.3V6K — C166 1U_0402_6.3V6K — C167 1U_0402_6.3V6K — C168 1U_0402_6.3V6K

IVY-BRIDGE_BGA1023

CPU1@

UCPU1H

VSS[1..180] — VSS

IVY-BRIDGE_BGA1023

CPU1@

Security Classification	Compal Secret Data		
Issued Date	2011/05/16	Deciphered Date	2013/05/16

THIS SHEET OF ENGINEERING DRAWING IS THE PROPRIETARY PROPERTY OF COMPAL ELECTRONICS, INC. AND CONTAINS CONFIDENTIAL AND TRADE SECRET INFORMATION. THIS SHEET MAY NOT BE TRANSFERED FROM THE CUSTODY OF THE COMPETENT DIVISION OF R&D DEPARTMENT EXCEPT AS AUTHORIZED BY COMPAL ELECTRONICS, INC. NEITHER THIS SHEET NOR THE INFORMATION IT CONTAINS MAY BE USED BY OR DISCLOSED TO ANY THIRD PARTY WITHOUT PRIOR WRITTEN CONSENT OF COMPAL ELECTRONICS, INC.

Compal Electronics, Inc.

Title: PROCESSOR(6/6) PWR,VSS

Size: Custom | Document Number: LA-8671P_SDV | Rev: 1.0

Date: Friday, July 27, 2012 | Sheet 9 of 50

www.roseflash.com

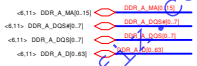

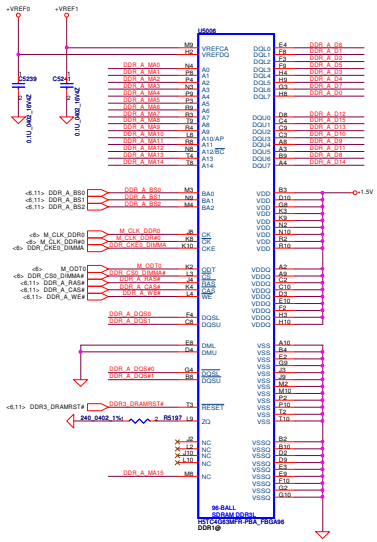

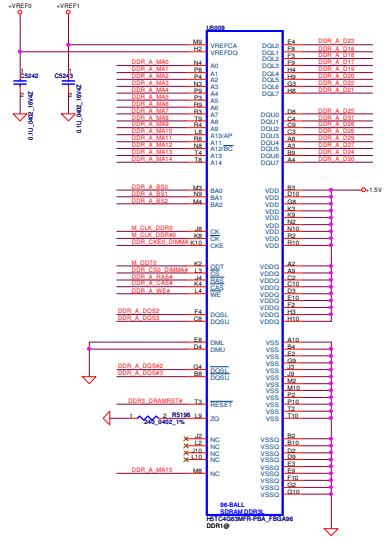

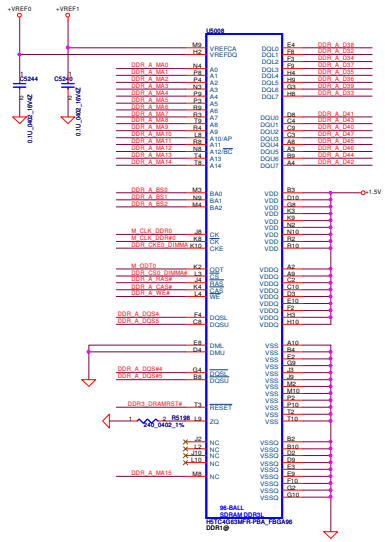

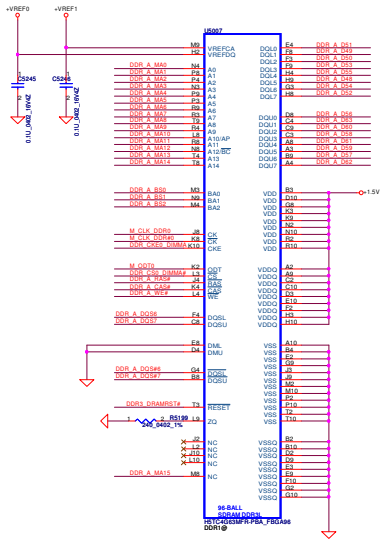

SA00001LV10

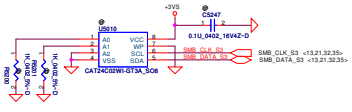

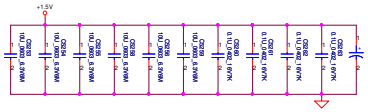

SGA00004L00

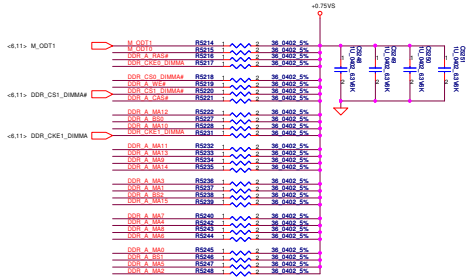

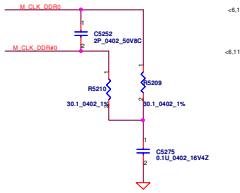

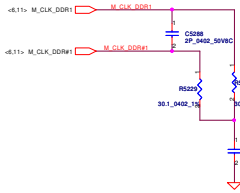

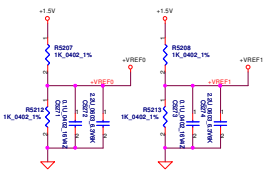

Security Classification	Compal Secret Data		Compal Electronics, Inc.
Issued Date: 2011/05/16	Deciphered Date: 2013/05/16		Title: DDRIII A Chip 2Gbit X16-I
THIS SHEET OF ENGINEERING DRAWING IS THE PROPRIETARY PROPERTY OF COMPAL ELECTRONICS, INC. AND CONTAINS CONFIDENTIAL AND TRADE SECRET INFORMATION. THIS SHEET MAY NOT BE TRANSFERRED FROM THE CUSTODY OF THE COMPETENT DIVISION OF R&D DEPARTMENT EXCEPT AS AUTHORIZED BY COMPAL ELECTRONICS, INC. NEITHER THIS SHEET NOR THE INFORMATION IT CONTAINS MAY BE USED BY OR DISCLOSED TO ANY THIRD PARTY WITHOUT PRIOR WRITTEN CONSENT OF COMPAL ELECTRONICS, INC.			Size: D; Document Number: LA-8671P_SDV; Rev: 1.0
			Date: Friday, July 27, 2012; Sheet 10 of 50

www.roseflon.com

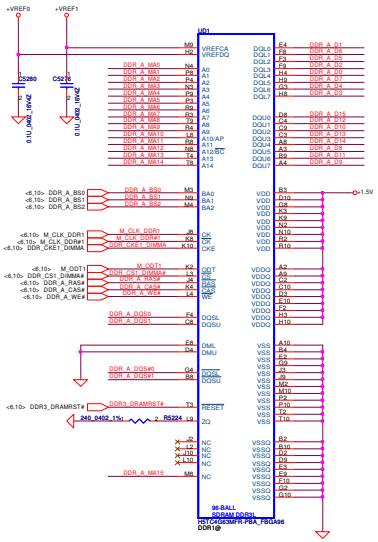

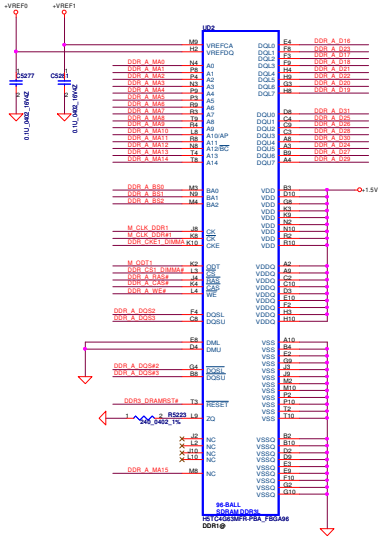

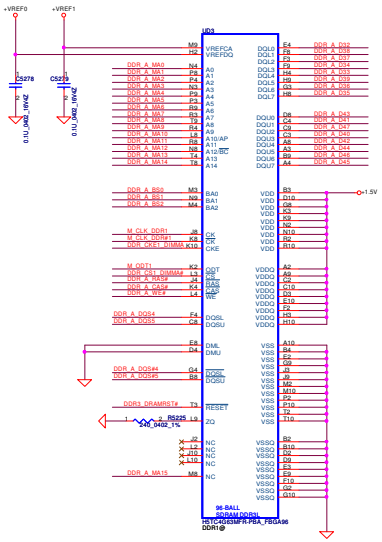

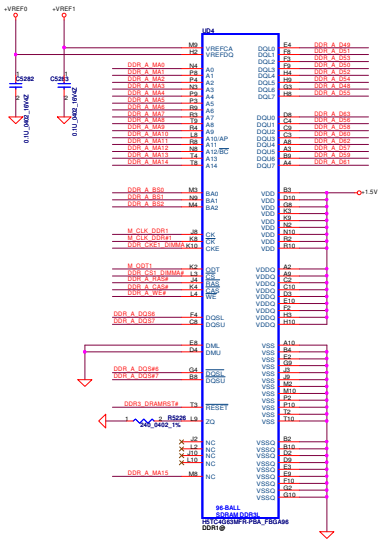

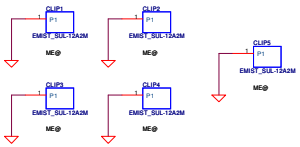

Security Classification	Compal Secret Data		
Issued Date	2011/05/16	Deciphered Date	2013/05/16

THIS SHEET OF ENGINEERING DRAWING IS THE PROPRIETARY PROPERTY OF COMPAL ELECTRONICS, INC. AND CONTAINS CONFIDENTIAL AND TRADE SECRET INFORMATION. THIS SHEET MAY NOT BE TRANSFERRED FROM THE CUSTODY OF THE COMPETENT DIVISION OF R&D DEPARTMENT EXCEPT AS AUTHORIZED BY COMPAL ELECTRONICS, INC. NEITHER THIS SHEET NOR THE INFORMATION IT CONTAINS MAY BE USED BY OR DISCLOSED TO ANY THIRD PARTY WITHOUT PRIOR WRITTEN CONSENT OF COMPAL ELECTRONICS, INC.

Compal Electronics, Inc.

Title: DDRIII A Chip 2Gbit X16-II

Size	Document Number	Rev
D	LA-8671P SDV	1.0

Date: Friday, July 27, 2012 | Sheet 11 of 50

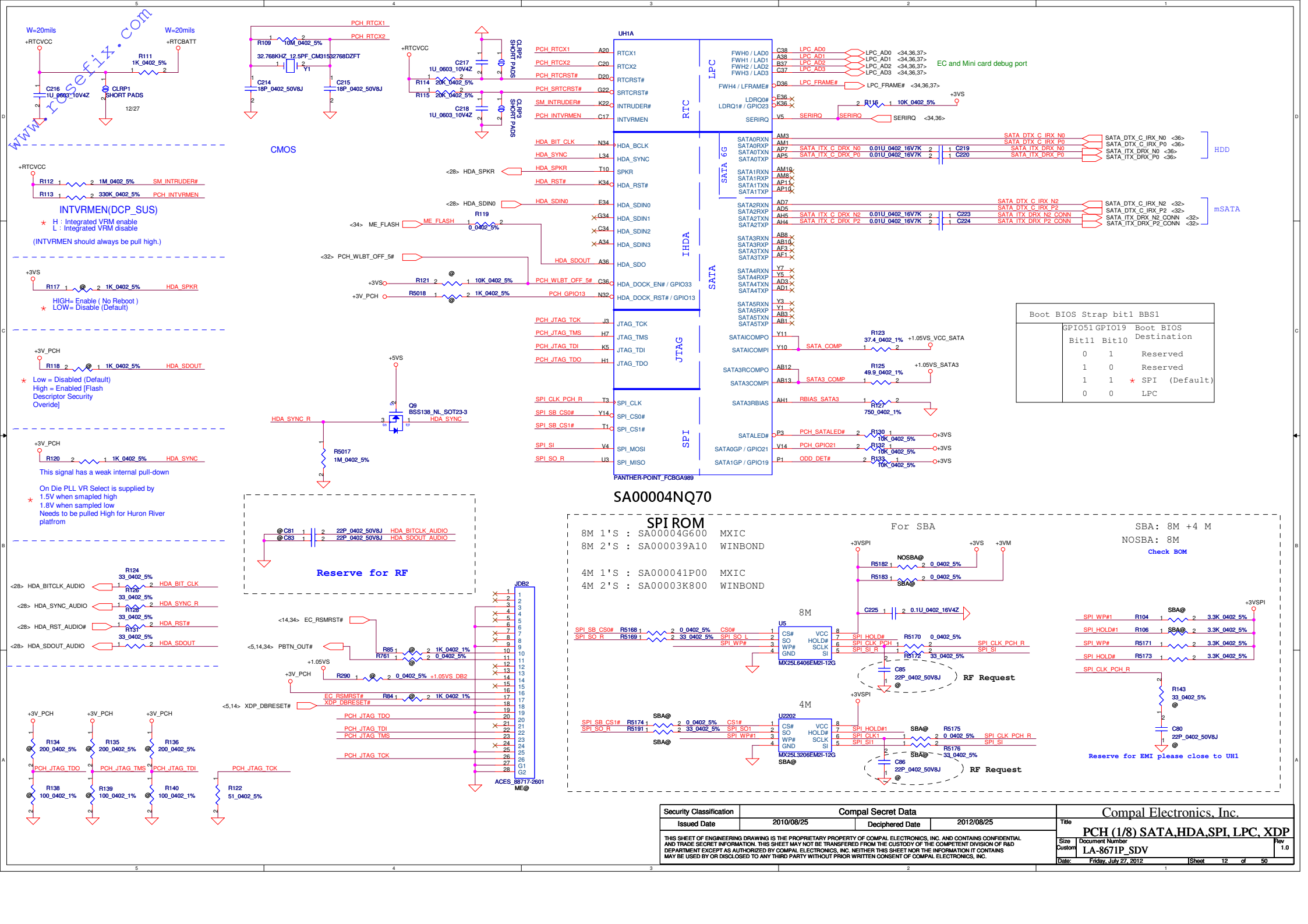
W=20mils
+RTCVCC
+RTCBATT
R111 1K_0402_5%
C216 1U_0603_10V4Z
CLRP1 SHORT PADS
12/27
PCH_RTCX1
PCH_RTCX2
R109 10M_0402_5%
32.768KHZ_12.5PF_CM1532768DZFT
Y1
C214 18P_0402_50V8J
C215 18P_0402_50V8J
CMOS
C217 1U_0603_10V4Z
R114 20K_0402_5%
R115 20K_0402_5%
C218 1U_0603_10V4Z
CLRP2 SHORT PADS
CLRP3 SHORT PADS
UH1A
PCH_RTCRST#
PCH_SRTCRST#
SM_INTRUDER#
PCH_INTVRMEN
HDA_BIT_CLK
HDA_SYNC
HDA_SPKR
HDA_RST#
HDA_SDIN0
HDA_SDIN1
HDA_SDIN2
HDA_SDIN3
HDA_SDOUT
PCH_WLBT_OFF_5#
PCH_GPIO13
PCH_JTAG_TCK
PCH_JTAG_TMS
PCH_JTAG_TDI
PCH_JTAG_TDO
SPI_CLK_PCH_R
SPI_SB_CS0#
SPI_SB_CS1#
SPI_SI
SPI_SO_R
RTC
LPC
IHDA
SATA
JTAG
SPI
PANTHER-POINT_FCBGA989
FWH0 / LAD0
FWH1 / LAD1
FWH2 / LAD2
FWH3 / LAD3
FWH4 / LFRAME#
LDRQ0#
LDRQ1# / GPIO23
SERIRQ
LPC_AD0
LPC_AD1
LPC_AD2
LPC_AD3
LPC_FRAME#
EC and Mini card debug port
SATA0RXN
SATA0RXP
SATA0TXN
SATA0TXP
SATA_ITX_C_DRX_N0
SATA_ITX_C_DRX_P0
0.01U_0402_16V7K
C219
C220
SATA_DTX_C_IRX_N0
SATA_DTX_C_IRX_P0
SATA_ITX_DRX_N0
SATA_ITX_DRX_P0
HDD
SATA1RXN
SATA1RXP
SATA1TXN
SATA1TXP
SATA2RXN
SATA2RXP
SATA2TXN
SATA2TXP
SATA_ITX_C_DRX_N2
SATA_ITX_C_DRX_P2
C223
C224
SATA_DTX_C_IRX_N2
SATA_DTX_C_IRX_P2
SATA_ITX_DRX_N2_CONN
SATA_ITX_DRX_P2_CONN
mSATA
SATA3RXN
SATA3RXP
SATA3TXN
SATA3TXP
SATA4RXN
SATA4RXP
SATA4TXN
SATA4TXP
SATA5RXN
SATA5RXP
SATA5TXN
SATA5TXP
SATAICOMPO
SATAICOMPI
SATA_COMP
R123 37.4_0402_1%
+1.05VS_VCC_SATA
SATA3RCOMPO
SATA3COMPI
SATA3_COMP
R125 49.9_0402_1%
+1.05VS_SATA3
SATA3RBIAS
RBIAS_SATA3
R127 750_0402_1%
SATALED#
SATA0GP / GPIO21
SATA1GP / GPIO19
PCH_SATALED#
PCH_GPIO21
ODD_DET#
R130 10K_0402_5%
R132 10K_0402_5%
R133 10K_0402_5%
+3VS
Boot BIOS Strap bit1 BBS1
GPIO51 Bit11
GPIO19 Bit10
Boot BIOS Destination
0 1 Reserved
1 0 Reserved
1 1 * SPI (Default)
0 0 LPC
R116 10K_0402_5%
+3VS
SERIRQ
<34,36>
<28> HDA_SPKR
<34> ME_FLASH
R119 0_0402_5%
<32> PCH_WLBT_OFF_5#
R121 10K_0402_5%
R5018 1K_0402_5%
+3VS
+3V_PCH
+5VS
Q9 BSS138_NL_SOT23-3
HDA_SYNC_R
R5017 1M_0402_5%
R111 1K_0402_5%
R112 1M_0402_5% SM_INTRUDER#
R113 330K_0402_5% PCH_INTVRMEN
INTVRMEN(DCP_SUS)
* H : Integrated VRM enable
L : Integrated VRM disable
(INTVRMEN should always be pull high.)
R117 1K_0402_5% HDA_SPKR
HIGH= Enable (No Reboot)
LOW= Disable (Default)
R118 1K_0402_5% HDA_SDOUT
* Low = Disabled (Default)
High = Enabled [Flash Descriptor Security Overide]
R120 1K_0402_5% HDA_SYNC
This signal has a weak internal pull-down
* On Die PLL VR Select is supplied by
1.5V when smapled high
1.8V when sampled low
Needs to be pulled High for Huron River platfrom
@C81 22P_0402_50V8J HDA_BITCLK_AUDIO
@C83 22P_0402_50V8J HDA_SDOUT_AUDIO
Reserve for RF
R124 33_0402_5%
R126 33_0402_5%
R128 33_0402_5%
R131 33_0402_5%
<28> HDA_BITCLK_AUDIO
<28> HDA_SYNC_AUDIO
<28> HDA_RST_AUDIO#
<28> HDA_SDOUT_AUDIO
HDA_BIT_CLK
HDA_SYNC_R
HDA_RST#
HDA_SDOUT
<14,34> EC_RSMRST#
<5,14,34> PBTN_OUT#
R85 1K_0402_1%
R761 0_0402_5%
+1.05VS
+3V_PCH
R290 0_0402_5% +1.05VS_DB2
EC_RSMRST#
R84 1K_0402_1%
XDP_DBRESET#
<5,14> XDP_DBRESET#
PCH_JTAG_TDO
PCH_JTAG_TDI
PCH_JTAG_TMS
PCH_JTAG_TCK
JDB2
ACES_88717-2601
ME@
R134 200_0402_5%
R135 200_0402_5%
R136 200_0402_5%
R138 100_0402_1%
R139 100_0402_1%
R140 100_0402_1%
R122 51_0402_5%
SA00004NQ70
SPI ROM
8M 1'S : SA00004G600 MXIC
8M 2'S : SA000039A10 WINBOND
4M 1'S : SA000041P00 MXIC
4M 2'S : SA00003K800 WINBOND
For SBA
SBA: 8M +4 M
NOSBA: 8M
Check BOM
8M
4M
U5
MX25L6406EMZI-12G
U2202
MX25L3206EMZI-12G
R5168 0_0402_5%
R5169 33_0402_5%
R5170 0_0402_5%
R5172 33_0402_5%
R5174 0_0402_5%
R5191 33_0402_5%
R5175 0_0402_5%
R5176 33_0402_5%
R5182 0_0402_5%
R5183 0_0402_5%
C225 0.1U_0402_16V4Z
C85 22P_0402_50V8J
C86 22P_0402_50V8J
RF Request
RF Request
R104 3.3K_0402_5%
R106 3.3K_0402_5%
R5171 3.3K_0402_5%
R5173 3.3K_0402_5%
R143 33_0402_5%
C80 22P_0402_50V8J
Reserve for EMI please close to UH1
Security Classification
Compal Secret Data
Issued Date
2010/08/25
Deciphered Date
2012/08/25
THIS SHEET OF ENGINEERING DRAWING IS THE PROPRIETARY PROPERTY OF COMPAL ELECTRONICS, INC. AND CONTAINS CONFIDENTIAL AND TRADE SECRET INFORMATION. THIS SHEET MAY NOT BE TRANSFERED FROM THE CUSTODY OF THE COMPETENT DIVISION OF R&D DEPARTMENT EXCEPT AS AUTHORIZED BY COMPAL ELECTRONICS, INC. NEITHER THIS SHEET NOR THE INFORMATION IT CONTAINS MAY BE USED BY OR DISCLOSED TO ANY THIRD PARTY WITHOUT PRIOR WRITTEN CONSENT OF COMPAL ELECTRONICS, INC.
Compal Electronics, Inc.
Title
PCH (1/8) SATA,HDA,SPI, LPC, XDP
Size Custom
Document Number
LA-8671P_SDV
Rev 1.0
Date: Friday, July 27, 2012
Sheet 12 of 50

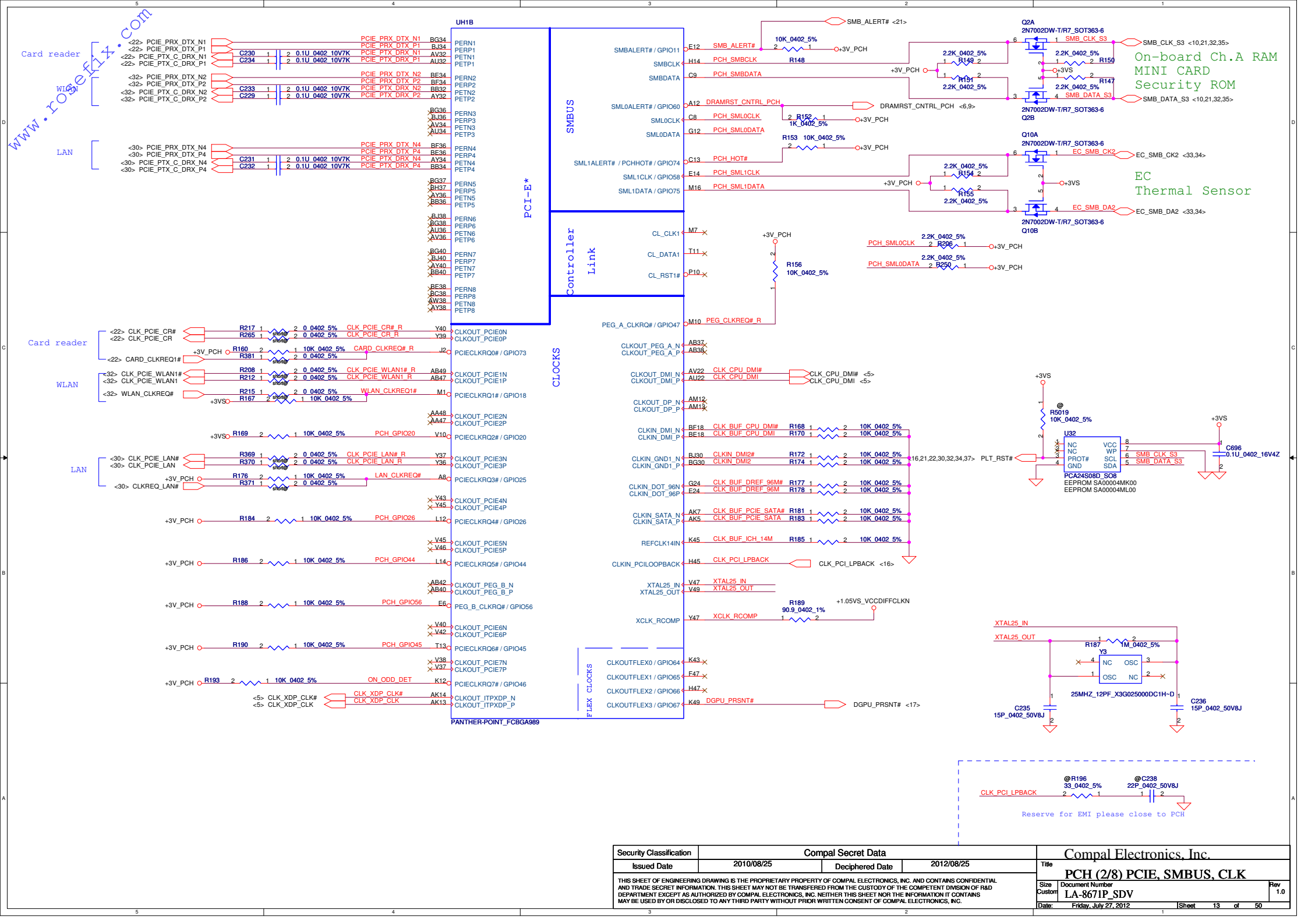

Security Classification	Compal Secret Data		
Issued Date	2010/08/25	Deciphered Date	2012/08/25

THIS SHEET OF ENGINEERING DRAWING IS THE PROPRIETARY PROPERTY OF COMPAL ELECTRONICS, INC. AND CONTAINS CONFIDENTIAL AND TRADE SECRET INFORMATION. THIS SHEET MAY NOT BE TRANSFERED FROM THE CUSTODY OF THE COMPETENT DIVISION OF R&D DEPARTMENT EXCEPT AS AUTHORIZED BY COMPAL ELECTRONICS, INC. NEITHER THIS SHEET NOR THE INFORMATION IT CONTAINS MAY BE USED BY OR DISCLOSED TO ANY THIRD PARTY WITHOUT PRIOR WRITTEN CONSENT OF COMPAL ELECTRONICS, INC.

Compal Electronics, Inc.

Title: PCH (2/8) PCIE, SMBUS, CLK

Size	Document Number	Rev
Custom	LA-8671P_SDV	1.0

Date: Friday, July 27, 2012 | Sheet 13 of 50

www.rosefix.com

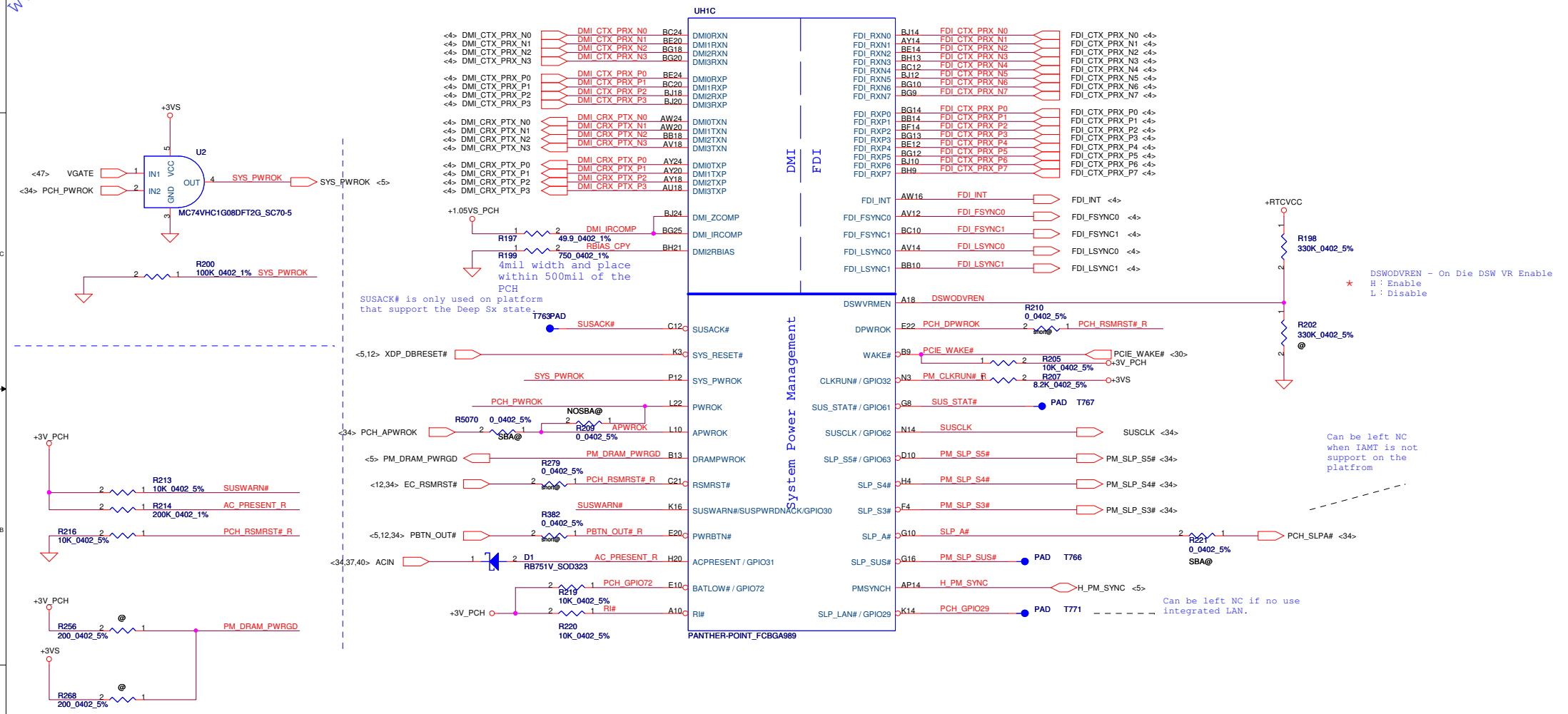

Security Classification	Compal Secret Data		
Issued Date	2010/08/25	Deciphered Date	2012/08/25

THIS SHEET OF ENGINEERING DRAWING IS THE PROPRIETARY PROPERTY OF COMPAL ELECTRONICS, INC. AND CONTAINS CONFIDENTIAL AND TRADE SECRET INFORMATION. THIS SHEET MAY NOT BE TRANSFERED FROM THE CUSTODY OF THE COMPETENT DIVISION OF R&D DEPARTMENT EXCEPT AS AUTHORIZED BY COMPAL ELECTRONICS, INC. NEITHER THIS SHEET NOR THE INFORMATION IT CONTAINS MAY BE USED BY OR DISCLOSED TO ANY THIRD PARTY WITHOUT PRIOR WRITTEN CONSENT OF COMPAL ELECTRONICS, INC.

Compal Electronics, Inc.

Title: PCH (3/8) DMI,FDI,PM,

Size	Document Number	Rev
Custom	LA-8671P_SDV	1.0

Date: Friday, July 27, 2012 | Sheet 14 of 50

www.rosefix.com

PORT	STRAP
LVDS	L_DDC_DATA
PORT B	SDVO_CTRLDATA
PORT C	DDPC_CTRLDATA
PORT D	DDPD_CTRLDATA

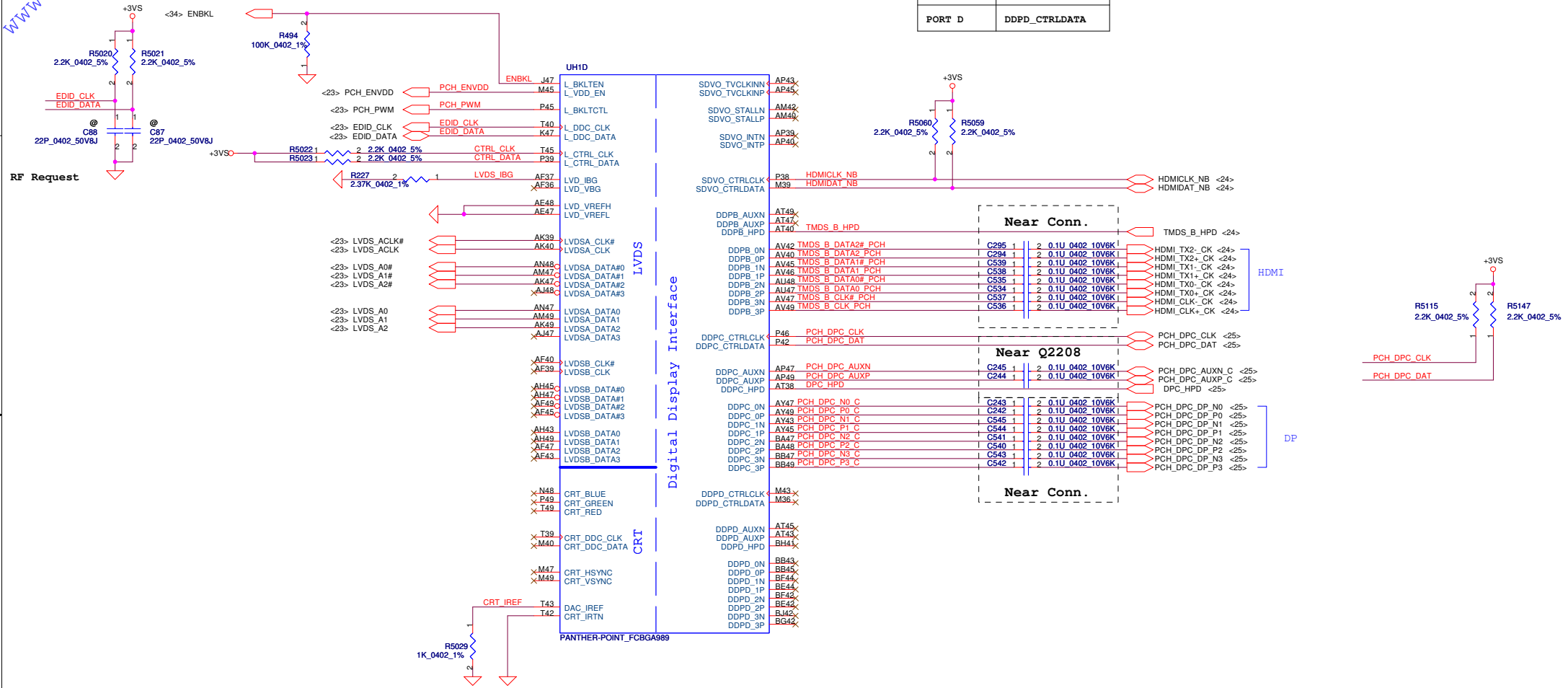

Security Classification	Compal Secret Data		
Issued Date	2010/08/25	Deciphered Date	2012/08/25

THIS SHEET OF ENGINEERING DRAWING IS THE PROPRIETARY PROPERTY OF COMPAL ELECTRONICS, INC. AND CONTAINS CONFIDENTIAL AND TRADE SECRET INFORMATION. THIS SHEET MAY NOT BE TRANSFERED FROM THE CUSTODY OF THE COMPETENT DIVISION OF R&D DEPARTMENT EXCEPT AS AUTHORIZED BY COMPAL ELECTRONICS, INC. NEITHER THIS SHEET NOR THE INFORMATION IT CONTAINS MAY BE USED BY OR DISCLOSED TO ANY THIRD PARTY WITHOUT PRIOR WRITTEN CONSENT OF COMPAL ELECTRONICS, INC.

Compal Electronics, Inc.

Title: PCH (4/9) LVDS,CRT,DP,HDMI

Size	Document Number	Rev
Custom	LA-8671P_SDV	1.0

Date: Friday, July 27, 2012 | Sheet 15 of 50

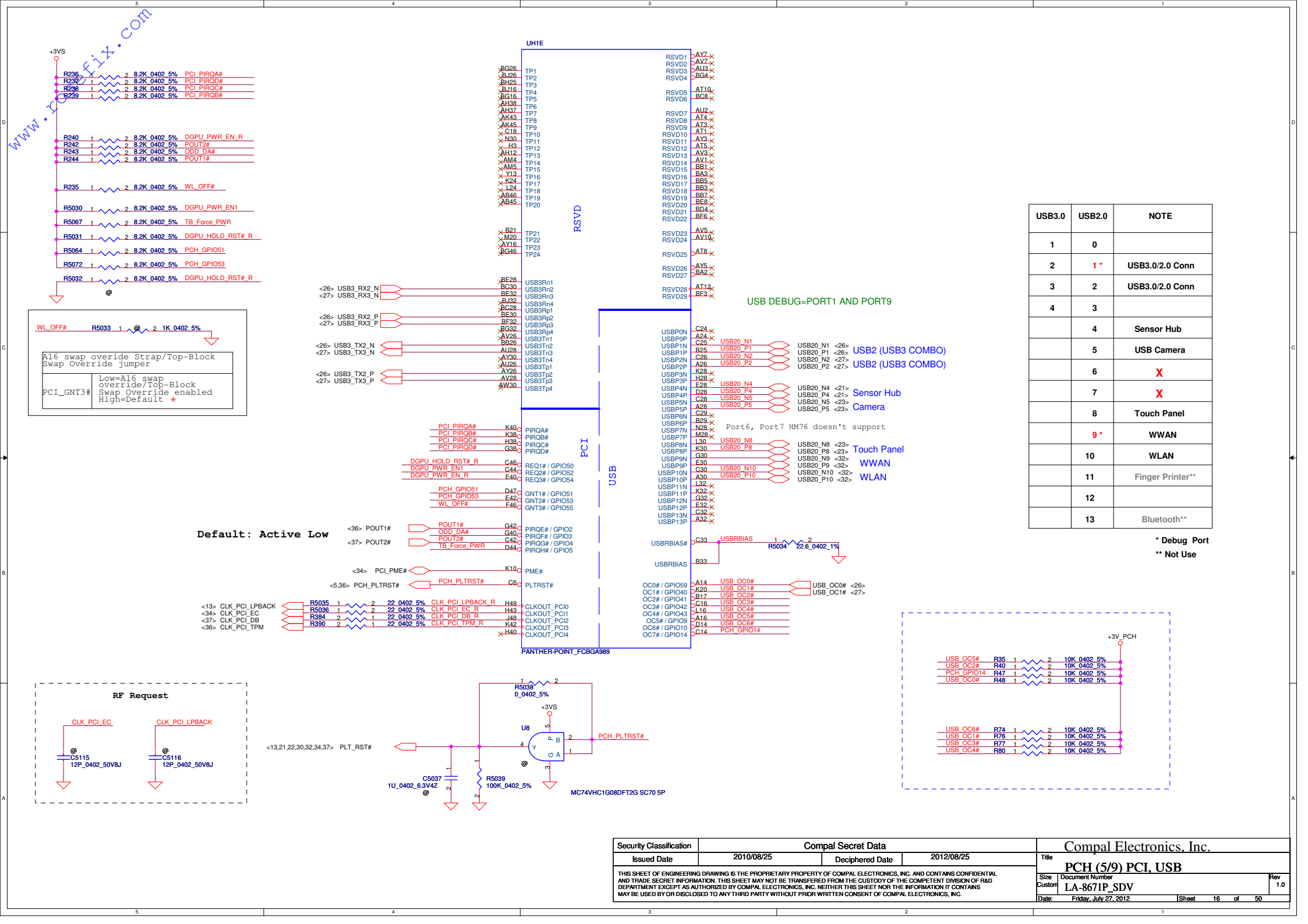

USB3.0	USB2.0	NOTE
1	0	
2	1 *	USB3.0/2.0 Conn
3	2	USB3.0/2.0 Conn
4	3	
	4	Sensor Hub
	5	USB Camera
	6	X
	7	X
	8	Touch Panel
	9 *	WWAN
	10	WLAN
	11	Finger Printer**
	12	
	13	Bluetooth**

* Debug Port
** Not Use

THIS SHEET OF ENGINEERING DRAWING IS THE PROPRIETARY PROPERTY OF COMPAL ELECTRONICS, INC. AND CONTAINS CONFIDENTIAL AND TRADE SECRET INFORMATION. THIS SHEET MAY NOT BE TRANSFERED FROM THE CUSTODY OF THE COMPETENT DIVISION OF R&D DEPARTMENT EXCEPT AS AUTHORIZED BY COMPAL ELECTRONICS, INC. NEITHER THIS SHEET NOR THE INFORMATION IT CONTAINS MAY BE USED BY OR DISCLOSED TO ANY THIRD PARTY WITHOUT PRIOR WRITTEN CONSENT OF COMPAL ELECTRONICS, INC.

Security Classification	Compal Secret Data		
Issued Date	2010/08/25	Deciphered Date	2012/08/25

Compal Electronics, Inc.

Title: PCH (5/9) PCI, USB

Size: Custom | Document Number: LA-8671P_SDV | Rev: 1.0

Date: Friday, July 27, 2012 | Sheet 16 of 50

www.cosef11.com

R259 @ 2 1K_0402_5% EC_SMI#

Weak internal pull-high

GPIO28

On-Die PLL Voltage Regulator
This signal has a weak internal pull up

* H : On-Die voltage regulator enable
L : On-Die PLL Voltage Regulator disable

R5042 1 @ 2 1K_0402_5% PCH_GPIO28

+3VS

R5046 10K_0402_5% DDR1@ RAM_ID3
R5049 10K_0402_5% DDR1@

R264 10K_0402_5% DDR1@ RAM_ID2
R267 10K_0402_5% DDR1@

<34> EC_LID_OUT# EC_LID_OUT#
<21> PA0_WAKEUP PA0_WAKEUP
<32> 3G_OFF# 3G_OFF#

R5050 10K_0402_5% <34> mSATA_DETEC# mSATA_PCH
R5051 0_0402_5% stuff@ <32> mSATA_DET# mSATA_PCH

<32> PCH_WLBT_OFF_51# PCH_WLBT_OFF_51#
<32> 3G_DET# 3G_DET#

R5063 10K_0402_5% PCH_GPIO37

KB_RST# R266 1 2 10K_0402_5%
ODD_EN# R1942 2 1 10K_0402_5%

FOR PROCESSOR SELECT

+1.8VS
R4914 2.2K_0402_5%
R241 1K_0402_5%
NV_CLE
H_SNB_IVB# <5>

CLOSE TO THE BRANCHING POINT

+3VS
R1943 10K_0402_5% @
R1944 10K_0402_5% DDR1@
R5066 10K_0402_5% DDR1@

PCH_GPIO69
RAM_ID1
RAM_ID0

R1945 10K_0402_5% DDR1@
R1947 10K_0402_5% DDR1@
R5040 10K_0402_5% DDR1@

UH1F

+3VS
R253 1 2 10K_0402_5% PCH_GPIO0 T7
R257 1 2 10K_0402_5% PCH_GPIO1 A42
R258 1 2 10K_0402_5% PA0_WAKEUP H36
<34> EC_SCI# EC_SCI# E38
<34> EC_SMI# EC_SMI# C10
+3V_PCH R261 1 2 10K_0402_5% PCH_GPIO12 C4
R262 1 @ 2 1K_0402_5% EC_LID_OUT# G2
RAM_ID2 U2
+3VS R404 1 2 10K_0402_5% DGPU_PWROK D40
+3VS R5041 1 2 10K_0402_5% PCH_GPIO22 T5
+3V_PCH R5073 1 2 10K_0402_5% PCH_GPIO24 E8
+3V_PCH R5074 1 @ 2 10K_0402_5% mSATA_PCH E16
+3V_PCH R5043 1 2 10K_0402_5% PCH_GPIO28 P8
+3VS R5044 1 2 10K_0402_5% PCH_BT_ON# K1
R273 1 2 10K_0402_5% 3G_DET# K4
R5048 @ 2 10K_0402_5% PCH_WLBT_OFF_51# V8
+3VS R5045 1 @ 2 10K_0402_5% PCH_GPIO37 M5
PCH_GPIO38 N2
R277 1 2 10K_0402_5% 3G_OFF# M3
RAM_ID3 V13
R5047 1 2 10K_0402_5% PCH_GPIO49 V3
+3V_PCH R281 1 @ 2 10K_0402_5% PCH_GPIO57 D6

BMBUSY# / GPIO0
TACH1 / GPIO1
TACH2 / GPIO6
TACH3 / GPIO7
GPIO8
LAN_PHY_PWR_CTRL / GPIO12
GPIO15
SATA4GP / GPIO16
TACH0 / GPIO17
SCLOCK / GPIO22
GPIO24
GPIO27
GPIO28
STP_PCI# / GPIO34
GPIO35
SATA2GP / GPIO36
SATA3GP / GPIO37
SLOAD / GPIO38
SDATAOUT0 / GPIO39
SDATAOUT1 / GPIO48
SATA5GP / GPIO49 / TEMP_ALERT#
GPIO57

GPIO

TACH4 / GPIO68 C40 ODD_EN#
TACH5 / GPIO69 B41 PCH_GPIO69
TACH6 / GPIO70 C41 RAM_ID1
TACH7 / GPIO71 A40 RAM_ID0

CPU/MISC

+3VS R260 10K_0402_5%
A20GATE P4 GATEA20 <34>
PECI AU16 PCH_PECI_R 0_0402_5% R263 H_PECI <5,34>
RCIN# P5 KB_RST# KB_RST# <34>
PROCPWRGD AY11 H_CPUPWRGD <5>
THRMTRIP# AY10 PCH_THRMTRIP#_R R269 390_0402_5% H_THERMTRIP# H_THERMTRIP# <5>
INIT3_3V# T14
DF_TVS AY1 NV_CLE

INIT3_3V
This signal has weak internal PU, can't pull low

TS_VSS1 AH8
TS_VSS2 AK11
TS_VSS3 AH10
TS_VSS4 AK10

Intel schematic reviwe recommand.

NC_1 P37

T81 PAD A4 VSS_NCTF_1
A44 VSS_NCTF_2
T78 PAD A45 VSS_NCTF_3
T79 PAD A46 VSS_NCTF_4
T84 PAD A5 VSS_NCTF_5
A6 VSS_NCTF_6
B3 VSS_NCTF_7
B47 VSS_NCTF_8
BD1 VSS_NCTF_9
BD49 VSS_NCTF_10
T86 PAD BE1 VSS_NCTF_11
T116 PAD BE49 VSS_NCTF_12
T76 PAD BF1 VSS_NCTF_13
T77 PAD BF49 VSS_NCTF_14

NCTF

VSS_NCTF_15 BG2
VSS_NCTF_16 BG48
VSS_NCTF_17 BH3
VSS_NCTF_18 BH47
VSS_NCTF_19 BJ4 PAD T64
VSS_NCTF_20 BJ44
VSS_NCTF_21 BJ45 PAD T62
VSS_NCTF_22 BJ46 PAD T63
VSS_NCTF_23 BJ5 PAD T68
VSS_NCTF_24 BJ6
VSS_NCTF_25 C2
VSS_NCTF_26 C48
VSS_NCTF_27 D1 PAD T72
VSS_NCTF_28 D49 PAD T73
VSS_NCTF_29 E1 PAD T70
VSS_NCTF_30 E49 PAD T71
VSS_NCTF_31 F1
VSS_NCTF_32 F49

PANTHER-POINT_FCBGA989

RAM_ID3 GPIO48	RAM_ID2 GPIO16	RAM_ID1 GPIO70	RAM_ID0 GPIO71	RAM
0	0	0	0	ELPIDA 4GB
0	0	0	1	SAMSUNG 4GB
0	0	1	0	HYNIX 4GB
0	0	1	1	ELPIDA 8GB
0	1	0	0	SAMSUNG 8GB
0	1	0	1	HYNIX 8GB
0	1	1	0	ELPIDA 2GB
0	1	1	1	SAMSUNG 2GB
1	0	0	0	HYNIX 2GB
1	0	0	1	TBD
1	0	1	0	TBD
1	0	1	1	TBD
1	1	0	0	TBD
1	1	0	1	TBD
1	1	1	0	TBD
1	1	1	1	TBD

PCH_GPIO69	PCH_GPIO38	PCH_GPIO67	Function	GPU_ID
0	0	0	PX4.0	0
0	0	1	Reserved	1
0	1	0	DIS	2
0	1	1	UMA	3

+3VS
R5167 10K_0402_5%
R5179 10K_0402_5%
PCH_GPIO38
DGPU_PRSNT# DGPU_PRSNT# <13>
R5180 10K_0402_5% @
R5181 10K_0402_5% @

Security Classification	Compal Secret Data		
Issued Date	2010/08/25	Deciphered Date	2012/08/25

THIS SHEET OF ENGINEERING DRAWING IS THE PROPRIETARY PROPERTY OF COMPAL ELECTRONICS, INC. AND CONTAINS CONFIDENTIAL AND TRADE SECRET INFORMATION. THIS SHEET MAY NOT BE TRANSFERED FROM THE CUSTODY OF THE COMPETENT DIVISION OF R&D DEPARTMENT EXCEPT AS AUTHORIZED BY COMPAL ELECTRONICS, INC. NEITHER THIS SHEET NOR THE INFORMATION IT CONTAINS MAY BE USED BY OR DISCLOSED TO ANY THIRD PARTY WITHOUT PRIOR WRITTEN CONSENT OF COMPAL ELECTRONICS, INC.

Compal Electronics, Inc.

Title: PCH (6/9) GPIO, CPU, MISC

Size: Custom | Document Number: LA-8671P_SDV | Rev: 1.0

Date: Friday, July 27, 2012 | Sheet 17 of 50

www.rosefix.com

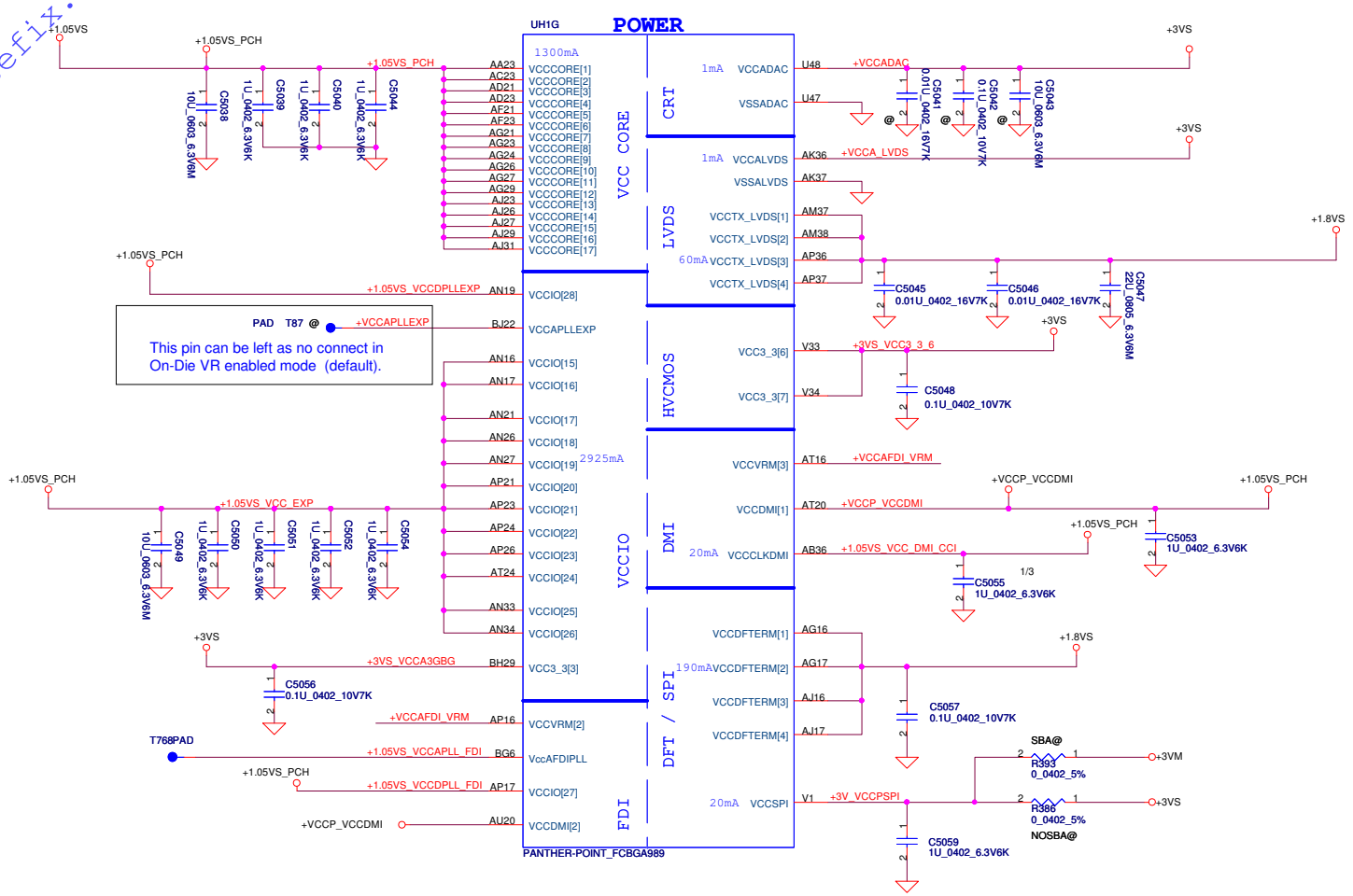

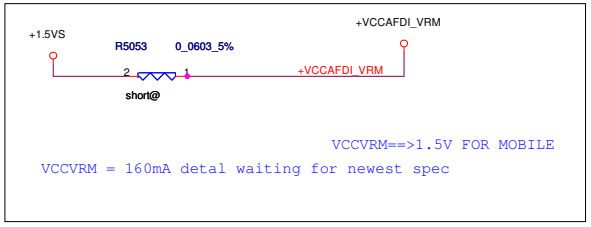

PCH Power Rail Table		
Voltage Rail	Voltage	S0 Iccmax Current (A)
V_PROC_IO	1.05	0.001
V5REF	5	0.001
V5REF_Sus	5	0.001
Vcc3_3	3.3	0.266
VccADAC	3.3	0.001
VccADPLLA	1.05	0.08
VccADPLLB	1.05	0.08
VccCore	1.05	1.3
VccDMI	1.05	0.042
VccIO	1.05	2.925
VccASW	1.05	1.01
VccSPI	3.3	0.02
VccDSW	3.3	0.003
VccpNAND	1.8	0.19
VccRTC	3.3	6 uA
VccSus3_3	3.3	0.119
VccSusHDA	3.3 / 1.5	0.01
VccVRM	1.8 / 1.5	0.16
VccCLKDMI	1.05	0.02
VccSSC	1.05	0.095
VccDIFFCLKN	1.05	0.055
VccALVDS	3.3	0.001
VccTX_LVDS	1.8	0.06

Security Classification	Compal Secret Data		
Issued Date	2010/08/25	Deciphered Date	2012/08/25

THIS SHEET OF ENGINEERING DRAWING IS THE PROPRIETARY PROPERTY OF COMPAL ELECTRONICS, INC. AND CONTAINS CONFIDENTIAL AND TRADE SECRET INFORMATION. THIS SHEET MAY NOT BE TRANSFERED FROM THE CUSTODY OF THE COMPETENT DIVISION OF R&D DEPARTMENT EXCEPT AS AUTHORIZED BY COMPAL ELECTRONICS, INC. NEITHER THIS SHEET NOR THE INFORMATION IT CONTAINS MAY BE USED BY OR DISCLOSED TO ANY THIRD PARTY WITHOUT PRIOR WRITTEN CONSENT OF COMPAL ELECTRONICS, INC.

Compal Electronics, Inc.

Title: PCH (7/9) PWR

Size	Document Number	Rev
Custom	LA-8671P_SDV	1.0

Date: Friday, July 27, 2012 Sheet 18 of 50

www.roseliu.com

Have internal VRM

POWER

UH1J

PANTHER-POINT_FCBGA989

Clock and Miscellaneous | USB | PCI/GPIO/LPC | SATA | MISC | CPU | DMI | HDA

+3VS
L3 10UH_LBR2012T100M_20%
+3VS_VCC_CLKF33
C5080 10U_0603_6.3V6M
C5081 1U_0402_6.3V6K

+1.05VS_PCH
R5055 0_0402_5%
+VCCACLK

+3V_PCH
C5063 0.1U_0402_10V7K
C5062 0.1U_0402_10V7K
+PCH_VCCDSW
+3VS_VCC_CLKF33

T764PAD
+VCCAPLL_CPY_PCH
+1.05VS_PCH
+VCCDPLL_CPY

+VCCSUS1
C5068 1U_0402_6.3V6K @

+1.05VS_PCH
NOSBA@
R1132 0_0603_5%
R1133 0_0603_5%
NOSBA@

+1.05VM
C5070 220U_0805_6.3V6M
C5071 220U_0805_6.3V6M
C5073 1U_0402_6.3V6K
C5074 1U_0402_6.3V6K
C5075 1U_0402_6.3V6K

+1.05VS_PCH
L5 10UH_LB2012T100MR_20%
+VCCA_DPLL_L
+1.05VS_VCCA_A_DPL
L6 10UH_LB2012T100MR_20%
+1.05VS_VCCA_B_DPL
C5079 220U_B2_2.5VM_R35
C5080 1U_0402_6.3V6K
C5081 220U_B2_2.5VM_R35
C5082 1U_0402_6.3V6K

+1.05VS_PCH
+VCCDIFFCLK
C5085 1U_0402_6.3V6K
+1.05VS_VCCDIFFCLKN
+1.05VS_PCH
+1.05VS_VCCDIFFCLKN
C298 1U_0402_6.3V6K

+1.05VS_PCH
+1.05VS_SSCVCC
C301 1U_0402_6.3V6K

R5058 0_0402_5% @
+1.05VS_PCH
+1.05VM_VCCSUS
C5111 1U_0402_6.3V6K @

+VCCRTCEXT
C297 0.1U_0402_10V7K
+VCCAFDI_VRM
+1.05VS_VCCA_A_DPL
+1.05VS_VCCA_B_DPL
+VCCDIFFCLK
+1.05VS_VCCDIFFCLKN
+1.05VS_SSCVCC
+VCCSST
C5086 0.1U_0402_10V7K
+1.05VM_VCCSUS

+1.05VS_PCH
+V_CPU_IO
C5087 4.7U_0603_6.3V6K
C5088 0.1U_0402_10V7K
C5089 0.1U_0402_10V7K
+RTCVCC
C5090 1U_0402_6.3V6K
C5091 0.1U_0402_10V7K
C5092 0.1U_0402_10V7K
C5093 0.1U_0402_16V4Z

+1.05VS_PCH
+1.05VS_VCCUSBCORE
C5064 1U_0402_6.3V6K
+3V_PCH
C5066 0.1U_0402_10V7K
C5067 0.1U_0402_10V7K
+1.05VS_PCH
+1.05VS_VCCAUPLL
+PCH_V5REF_SUS
C5072 1U_0402_6.3V6K @
DCPSUS[4]
+VCCA_USBSUS
+3V_PCH

+3V_PCH
C5076 1U_0402_6.3V6K
+3VS
C5078 0.1U_0402_10V7K
+3VS
C5083 0.1U_0402_10V7K
+3VS_VCCPCORE
+3VS_VCCPPCI

+3VS
C5084 0.1U_0402_10V7K
+VCC3_3_2
+1.05VS_SATA3
+1.05VS_PCH
C296 1U_0402_6.3V6K
+1.05VS_SATA3
PADT765
+VCCSATAPLL
+VCCAFDI_VRM

+1.05VS_PCH
+1.05VS_VCC_SATA
+1.05VS_PCH
C300 1U_0402_6.3V6K

+1.05VM
R387 0_0402_5% @
+3V_PCH
+VCCSUSHDA
C5093 0.1U_0402_16V4Z

+3VALW
+3V_PCH
2MM J20
Q120 SI2301BDS-T1-E3_SOT23-3 ID4@
<34> PCH_PWR_EN#
R713 0_0402_5% ID4@
C5104 0.1U_0402_10V7K ID4@
C5084 10U_0603_6.3V6M ID4@
C5085 1U_0402_6.3V6K ID4@

+5VALW
+5V_PCH
2MM J21
Q121 SI2301BDS-T1-E3_SOT23-3 ID4@
PCH_PWR_EN#
R711 0_0402_5% ID4@
C5103 0.1U_0402_10V7K ID4@
C5086 10U_0603_6.3V6M ID4@
C5087 1U_0402_6.3V6K ID4@

+5V_PCH
R5056 100_0402_5%
+3V_PCH
D4602 CH751H-40PT_SOD323-2
+PCH_V5REF_SUS
C5069 0.1U_0603_25V7K

+5VS
+3VS
R5057 100_0402_5%
D3 CH751H-40PT_SOD323-2
+PCH_V5REF_RUN
C5077 1U_0603_10V6K

+3VALW TO +3VM

FOR SBA

+3VALW
+3VM
2MM J17
SBA@ 10U_0805_10V4Z
SBA@ 1U_0603_10V4Z
C5235
C5233
R5143 470_0603_5%
Q119 AP2301GN-HF_SOT23-3 SBA@
2N7002H_SOT23-3
Q17 @
VL
+5VALW
R5141 20K_0402_5%
R5140 20K_0402_5% SBA@
SLP_A
R5102 20K_0402_5% SBA@
C5234 0.1U_0603_25V7K SBA@
SLP_A
<34,44> M_PWR_ON
Q118 2N7002K_SOT23-3 SBA@

Security Classification	Compal Secret Data		
Issued Date	2010/08/25	Deciphered Date	2012/08/25

THIS SHEET OF ENGINEERING DRAWING IS THE PROPRIETARY PROPERTY OF COMPAL ELECTRONICS, INC. AND CONTAINS CONFIDENTIAL AND TRADE SECRET INFORMATION. THIS SHEET MAY NOT BE TRANSFERED FROM THE CUSTODY OF THE COMPETENT DIVISION OF R&D DEPARTMENT EXCEPT AS AUTHORIZED BY COMPAL ELECTRONICS, INC. NEITHER THIS SHEET NOR THE INFORMATION IT CONTAINS MAY BE USED BY OR DISCLOSED TO ANY THIRD PARTY WITHOUT PRIOR WRITTEN CONSENT OF COMPAL ELECTRONICS, INC.

Compal Electronics, Inc.

Title: PCH (8/9) PWR

Size: Custom | Document Number: LA-8671P_SDV | Rev: 1.0

Date: Friday, July 27, 2012 | Sheet 19 of 50

www.rosefix.com

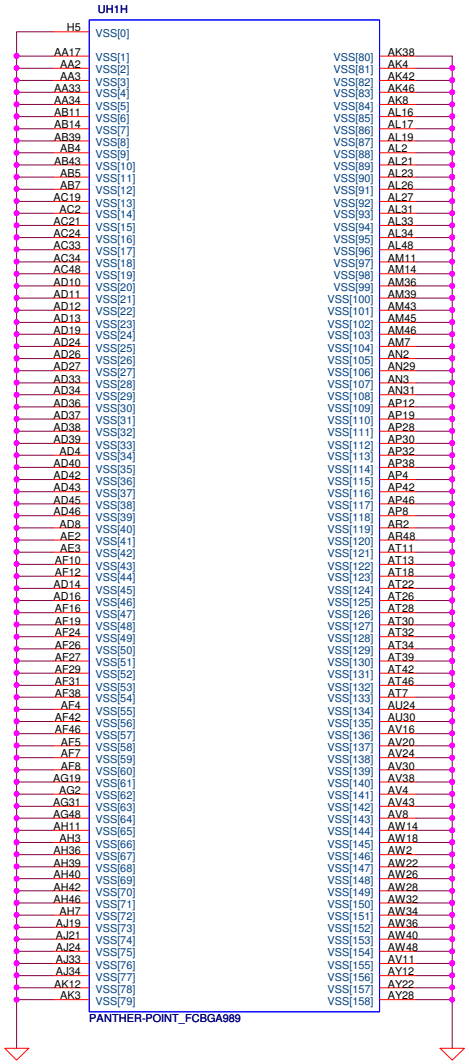

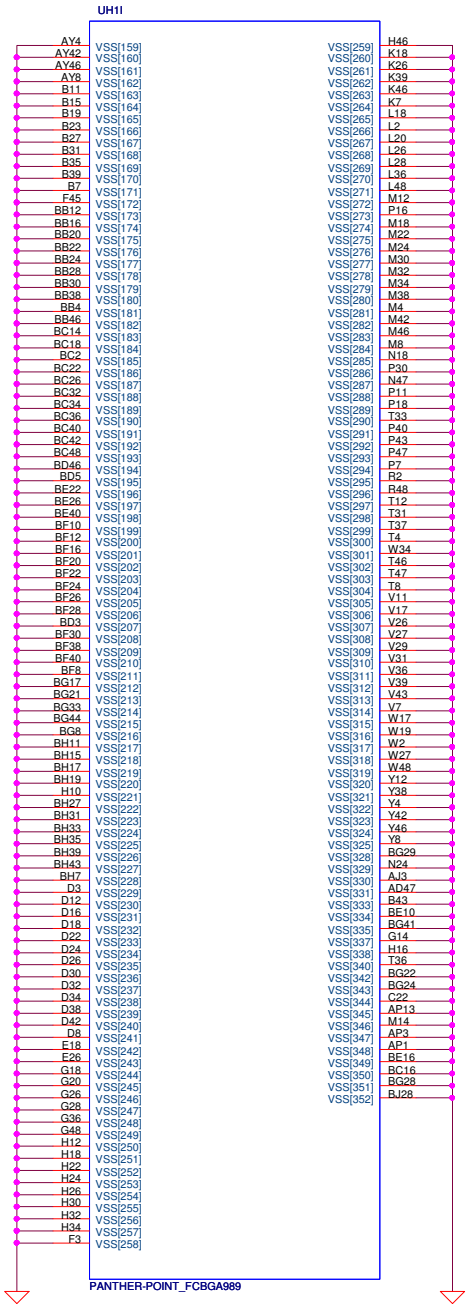

Security Classification	Compal Secret Data		
Issued Date	2010/08/25	Deciphered Date	2012/08/25

THIS SHEET OF ENGINEERING DRAWING IS THE PROPRIETARY PROPERTY OF COMPAL ELECTRONICS, INC. AND CONTAINS CONFIDENTIAL AND TRADE SECRET INFORMATION. THIS SHEET MAY NOT BE TRANSFERED FROM THE CUSTODY OF THE COMPETENT DIVISION OF R&D DEPARTMENT EXCEPT AS AUTHORIZED BY COMPAL ELECTRONICS, INC. NEITHER THIS SHEET NOR THE INFORMATION IT CONTAINS MAY BE USED BY OR DISCLOSED TO ANY THIRD PARTY WITHOUT PRIOR WRITTEN CONSENT OF COMPAL ELECTRONICS, INC.

Compal Electronics, Inc.

Title: PCH (9/9) VSS

Size	Document Number	Rev
Custom	LA-8671P_SDV	1.0

Date: Friday, July 27, 2012 | Sheet 20 of 50

www.rosefix.com

Accelerometer + eCompass

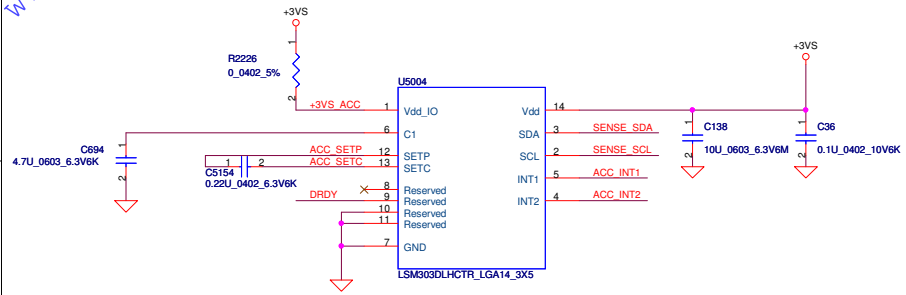

Gyro

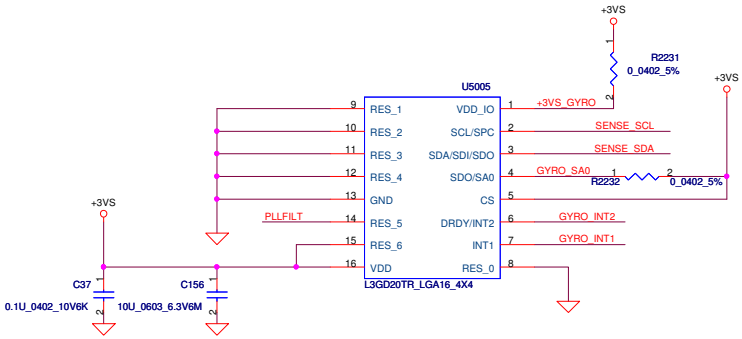

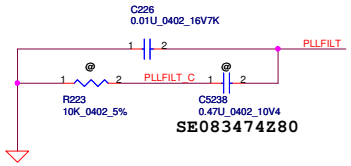

Sensor Hub

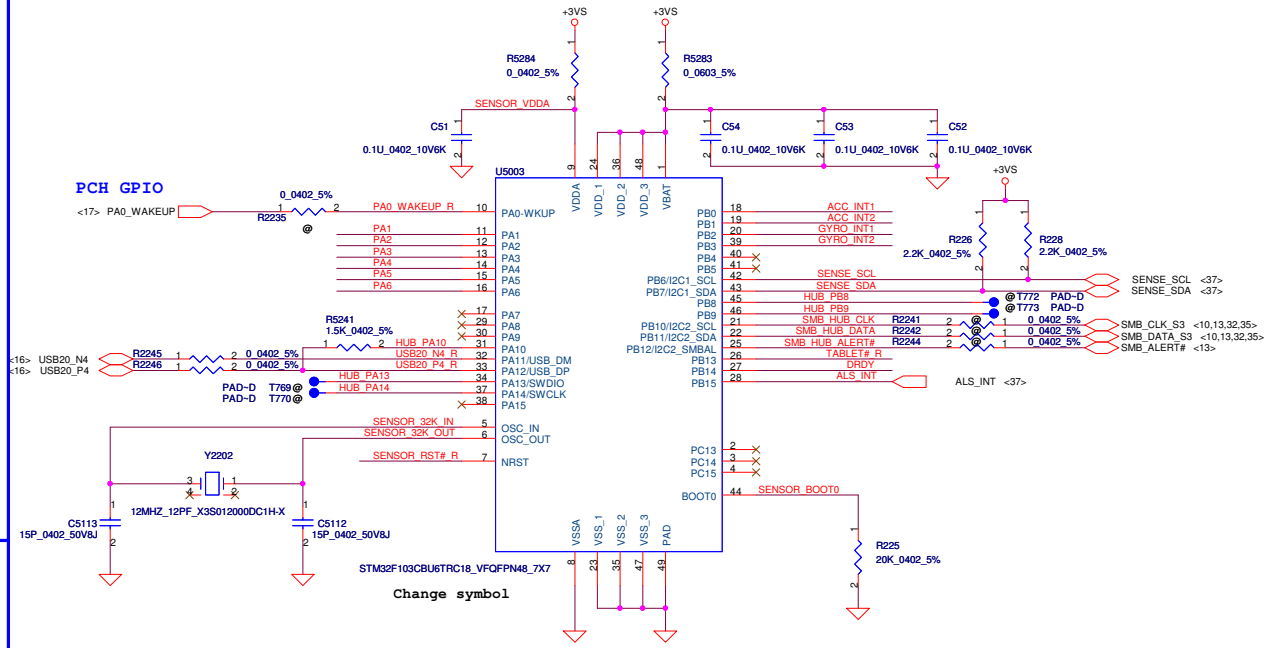

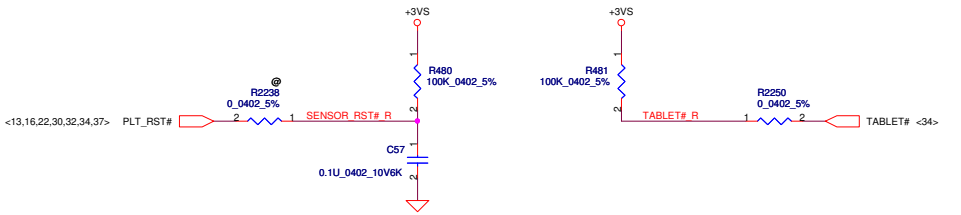

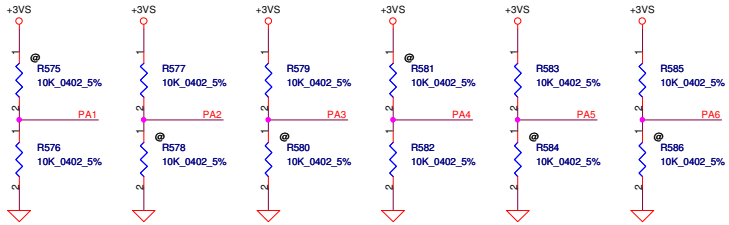

Security Classification	Compal Secret Data		
Issued Date	2010/08/25	Deciphered Date	2012/08/25

THIS SHEET OF ENGINEERING DRAWING IS THE PROPRIETARY PROPERTY OF COMPAL ELECTRONICS, INC. AND CONTAINS CONFIDENTIAL AND TRADE SECRET INFORMATION. THIS SHEET MAY NOT BE TRANSFERED FROM THE CUSTODY OF THE COMPETENT DIVISION OF R&D DEPARTMENT EXCEPT AS AUTHORIZED BY COMPAL ELECTRONICS, INC. NEITHER THIS SHEET NOR THE INFORMATION IT CONTAINS MAY BE USED BY OR DISCLOSED TO ANY THIRD PARTY WITHOUT PRIOR WRITTEN CONSENT OF COMPAL ELECTRONICS, INC.

Compal Electronics, Inc.

Title: Sensor Fusion

Size	Document Number	Rev
Custom	LA-8671P_SDV	1.0

Date: Friday, July 27, 2012 | Sheet 21 of 50

www.rosefix.com

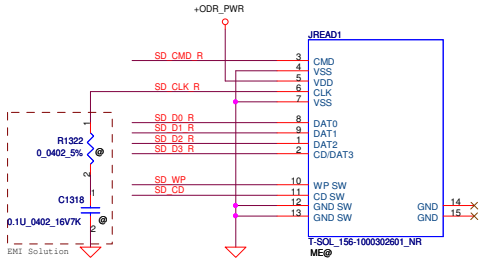

	SD_CD	SD_WP
CARD UNINSERTION	Close(Low)	Close(Low)
CARD HALF INSERTION	Close(Low)	Open(High)
CARD INSERTION	Open(High)	Close(Low)

No 41, for measurement

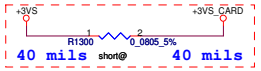

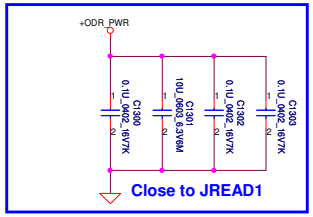

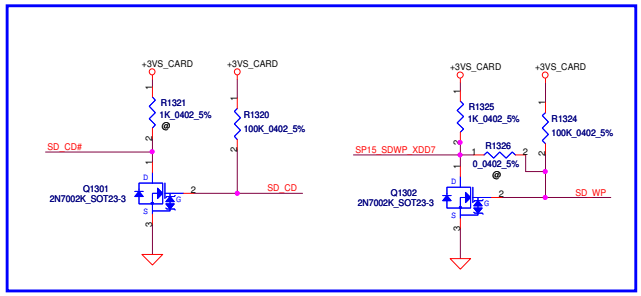

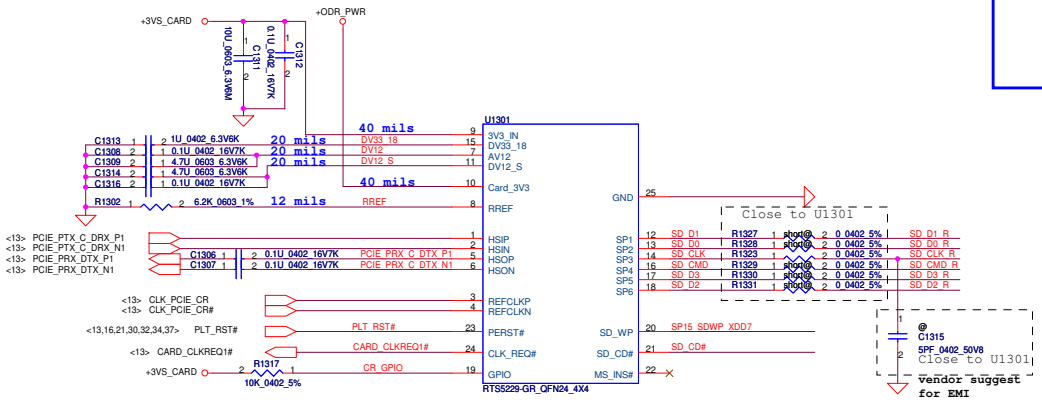

THIS SHEET OF ENGINEERING DRAWING IS THE PROPRIETARY PROPERTY OF COMPAL ELECTRONICS, INC. AND CONTAINS CONFIDENTIAL AND TRADE SECRET INFORMATION. THIS SHEET MAY NOT BE TRANSFERED FROM THE CUSTODY OF THE COMPETENT DIVISION OF R&D DEPARTMENT EXCEPT AS AUTHORIZED BY COMPAL ELECTRONICS, INC. NEITHER THIS SHEET NOR THE INFORMATION IT CONTAINS MAY BE USED BY OR DISCLOSED TO ANY THIRD PARTY WITHOUT PRIOR WRITTEN CONSENT OF COMPAL ELECTRONICS, INC.

Security Classification	Compal Secret Data		
Issued Date	2011/05/16	Deciphered Date	2013/05/16

Compal Electronics, Inc.

Title: Card Reader

Size: C | Document Number: LA-8671P_SDV | Rev: 1.0

Date: Friday, July 27, 2012 | Sheet 22 of 50

www.rosefix.com

PN:SP01000XE00

LCD POWER CIRCUIT

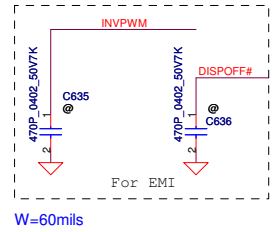

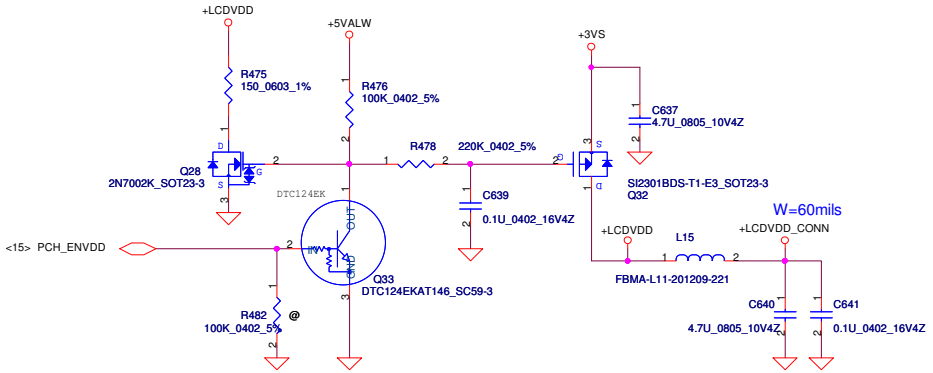

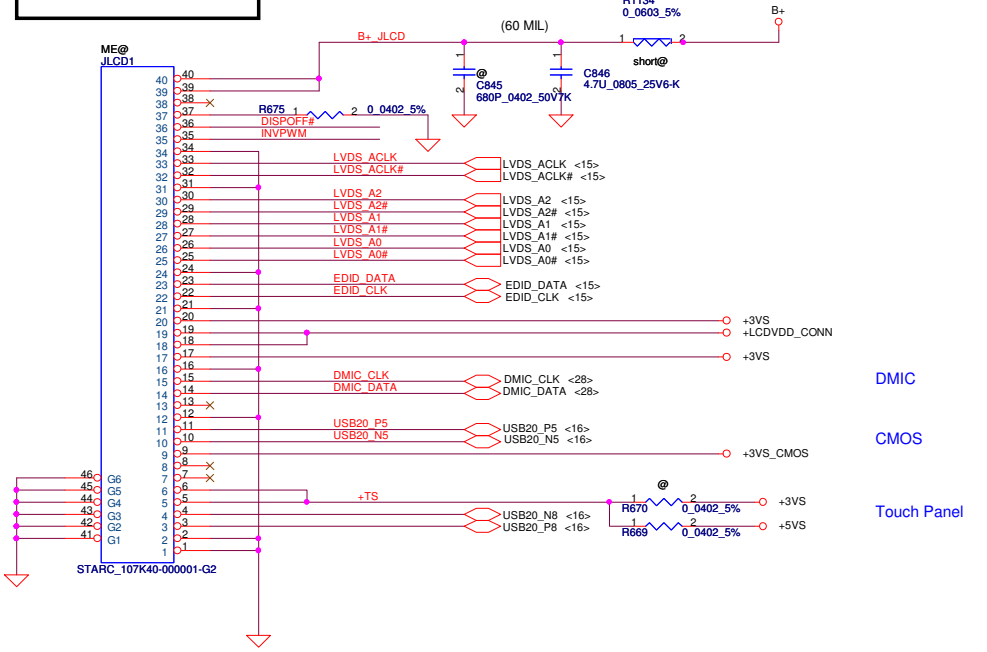

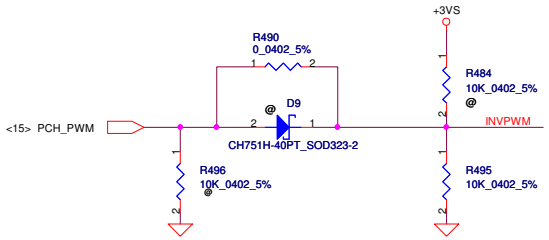

For GMCH DPST

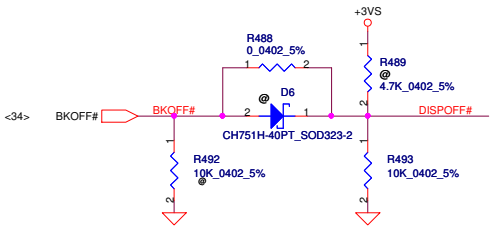

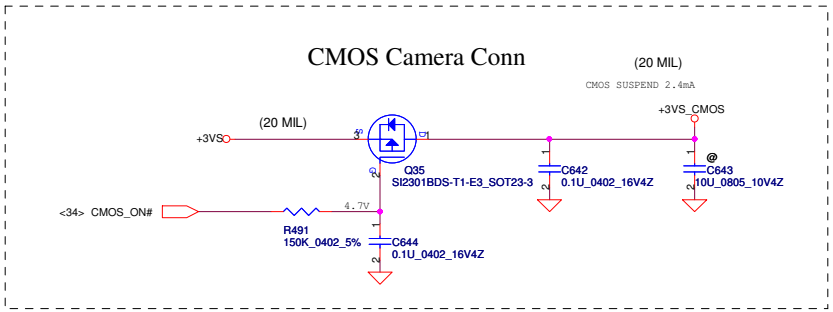

Security Classification	Compal Secret Data		
Issued Date	2010/08/25	Deciphered Date	2012/08/25

THIS SHEET OF ENGINEERING DRAWING IS THE PROPRIETARY PROPERTY OF COMPAL ELECTRONICS, INC. AND CONTAINS CONFIDENTIAL AND TRADE SECRET INFORMATION. THIS SHEET MAY NOT BE TRANSFERED FROM THE CUSTODY OF THE COMPETENT DIVISION OF R&D DEPARTMENT EXCEPT AS AUTHORIZED BY COMPAL ELECTRONICS, INC. NEITHER THIS SHEET NOR THE INFORMATION IT CONTAINS MAY BE USED BY OR DISCLOSED TO ANY THIRD PARTY WITHOUT PRIOR WRITTEN CONSENT OF COMPAL ELECTRONICS, INC.

Compal Electronics, Inc.

Title: LVDS/CAMERA

Size	Document Number	Rev
Custom	LA-8671P_SDV	1.0

Date: Friday, July 27, 2012 | Sheet 23 of 50

www.rosefix.com

PN:SM070001S00x 4

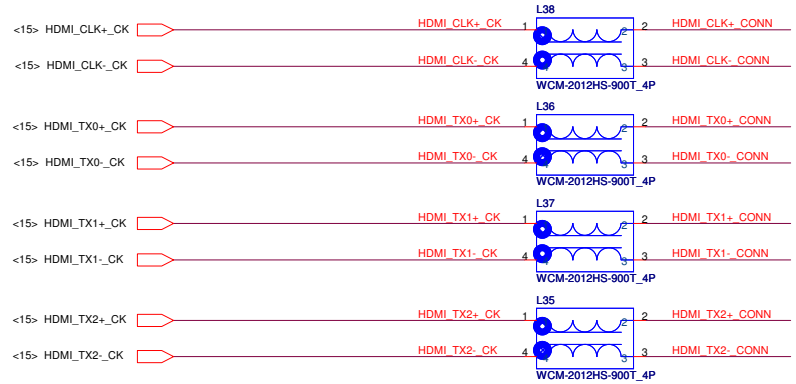

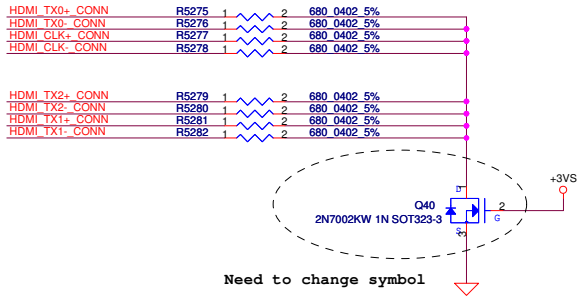

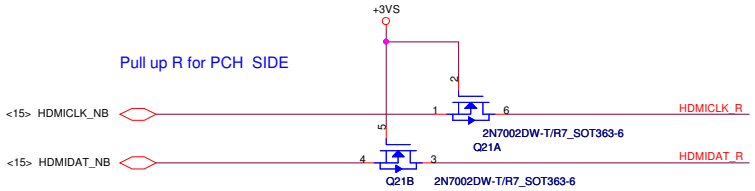

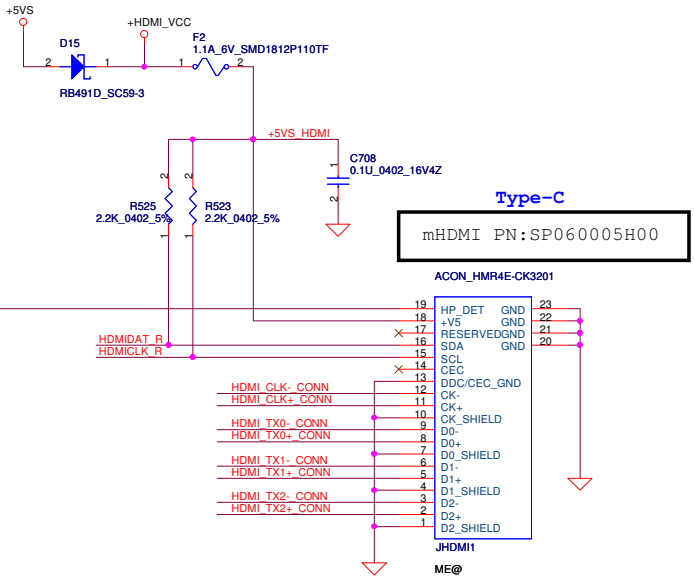

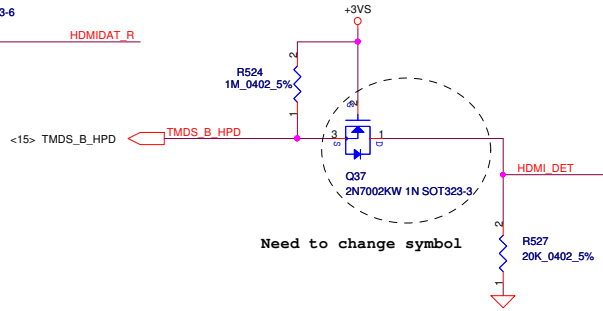

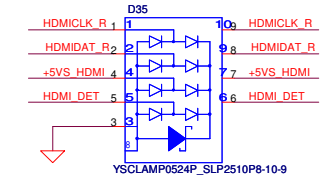

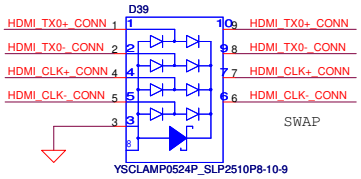

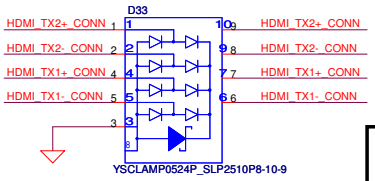

1'SPN: SC300001Y00
2'SPN: SC300002800

Security Classification	Compal Secret Data		
Issued Date	2010/08/25	Deciphered Date	2012/08/25

THIS SHEET OF ENGINEERING DRAWING IS THE PROPRIETARY PROPERTY OF COMPAL ELECTRONICS, INC. AND CONTAINS CONFIDENTIAL AND TRADE SECRET INFORMATION. THIS SHEET MAY NOT BE TRANSFERED FROM THE CUSTODY OF THE COMPETENT DIVISION OF R&D DEPARTMENT EXCEPT AS AUTHORIZED BY COMPAL ELECTRONICS, INC. NEITHER THIS SHEET NOR THE INFORMATION IT CONTAINS MAY BE USED BY OR DISCLOSED TO ANY THIRD PARTY WITHOUT PRIOR WRITTEN CONSENT OF COMPAL ELECTRONICS, INC.

Compal Electronics, Inc.

Title: Mini-HDMI

Size	Document Number	Rev
Custom	LA-8671P_SDV	1.0

Date: Friday, July 27, 2012 Sheet 24 of 50

www.rosefix.com

Close to JmDP1

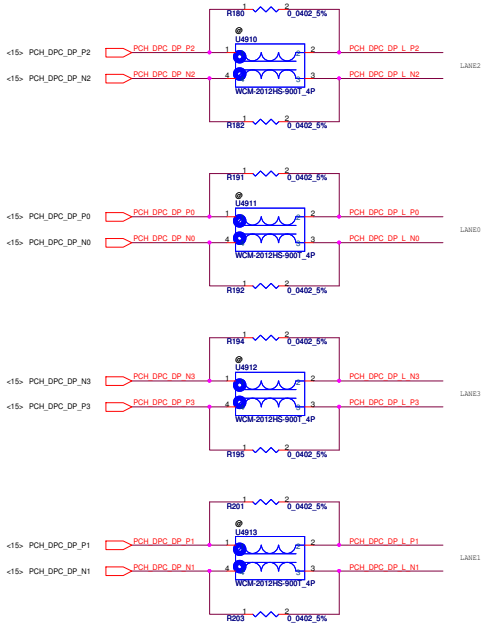

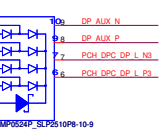

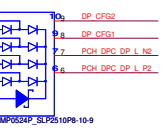

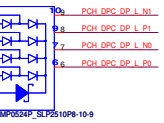

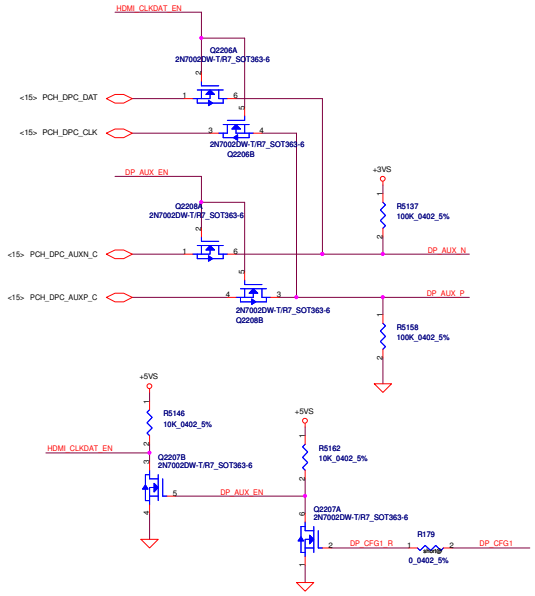

TBT, HDMI, DP mode table

HPD	CFG1	CFG2	LSRX	Mode
1	0	0	X	DP
1	1	X	X	HDMI
0	0	1	1	TBT

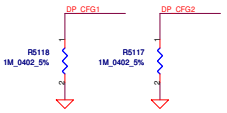

mini DP type

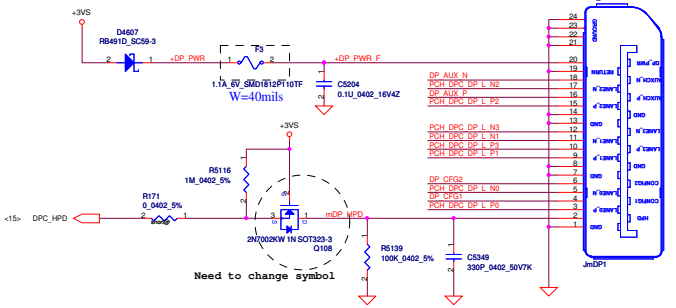

Security Classification	Compal Secret Data		
Issued Date	2010/08/25	Deciphered Date	2012/08/25

THIS SHEET OF ENGINEERING DRAWING IS THE PROPRIETARY PROPERTY OF COMPAL ELECTRONICS, INC. AND CONTAINS CONFIDENTIAL AND TRADE SECRET INFORMATION. THIS SHEET MAY NOT BE TRANSFERED FROM THE CUSTODY OF THE COMPETENT DIVISION OF R&D DEPARTMENT EXCEPT AS AUTHORIZED BY COMPAL ELECTRONICS, INC. NEITHER THIS SHEET NOR THE INFORMATION IT CONTAINS MAY BE USED BY OR DISCLOSED TO ANY THIRD PARTY WITHOUT PRIOR WRITTEN CONSENT OF COMPAL ELECTRONICS, INC.

Compal Electronics, Inc.	
Title	mDP Connector
Size: Custom	Document Number: LA-8671P_SDV
Rev: 1.0	
Date: Friday, July 27, 2012	Sheet 25 of 50

www.rosefix.com

1'SPN: SC300001Y00
2'SPN: SC300002800

JUSB1USB3.0/USB2.0

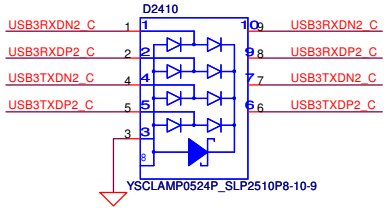

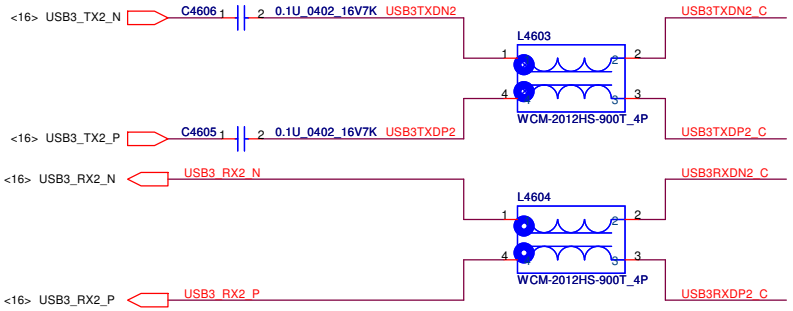

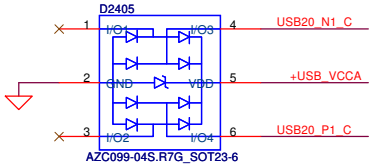

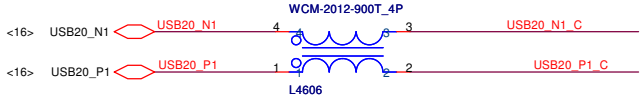

1'S PN: SC300001G00
2'S PN: SC300002E00

DC23300A410

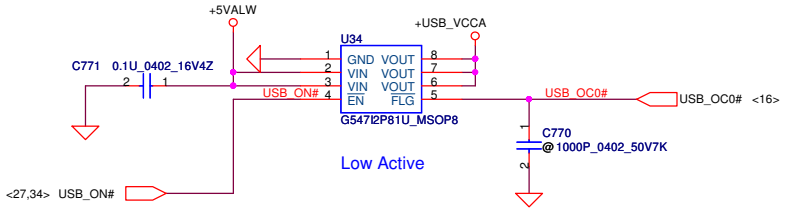

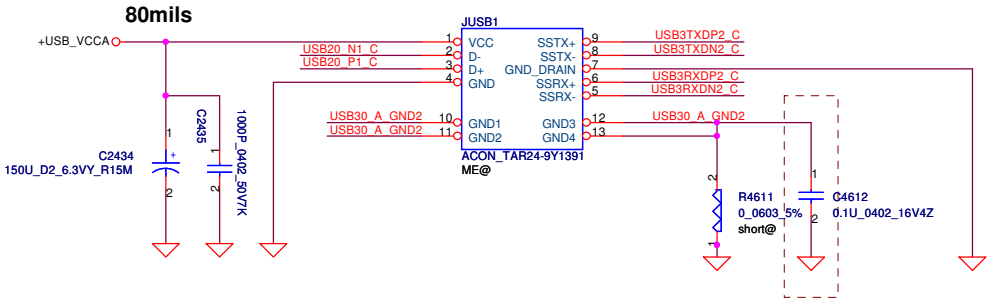

Security Classification	Compal Secret Data		
Issued Date	2011/05/16	Deciphered Date	2013/05/16

THIS SHEET OF ENGINEERING DRAWING IS THE PROPRIETARY PROPERTY OF COMPAL ELECTRONICS, INC. AND CONTAINS CONFIDENTIAL AND TRADE SECRET INFORMATION. THIS SHEET MAY NOT BE TRANSFERED FROM THE CUSTODY OF THE COMPETENT DIVISION OF R&D DEPARTMENT EXCEPT AS AUTHORIZED BY COMPAL ELECTRONICS, INC. NEITHER THIS SHEET NOR THE INFORMATION IT CONTAINS MAY BE USED BY OR DISCLOSED TO ANY THIRD PARTY WITHOUT PRIOR WRITTEN CONSENT OF COMPAL ELECTRONICS, INC.

Compal Electronics, Inc.

Title: USB3.0/2.0 CONN-L

Size	Document Number	Rev
Custom	LA-8671P_SDV	1.0

Date: Friday, July 27, 2012 Sheet 26 of 50

www.rosefix.com

1'SPN: SC300001Y00
2'SPN: SC300002800

JUSB1USB3.0/USB2.0

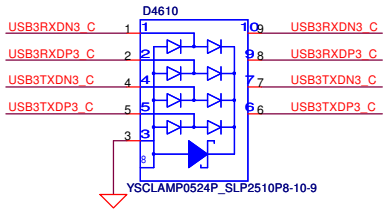

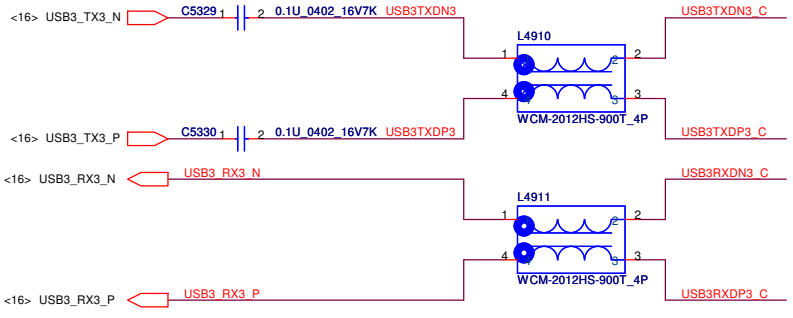

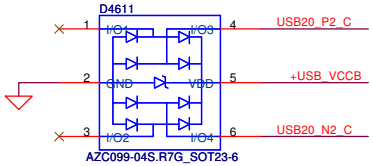

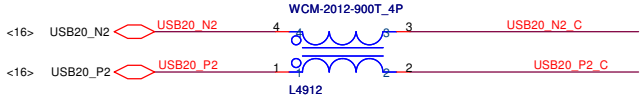

1'S PN: SC300001G00
2'S PN: SC300002E00

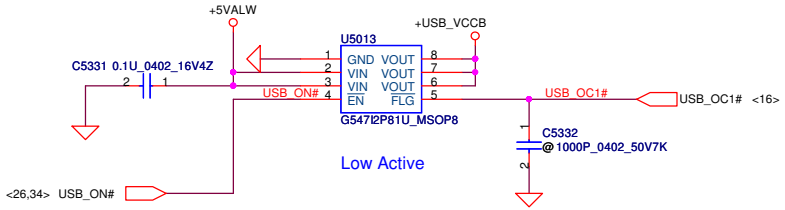

DC23300A410

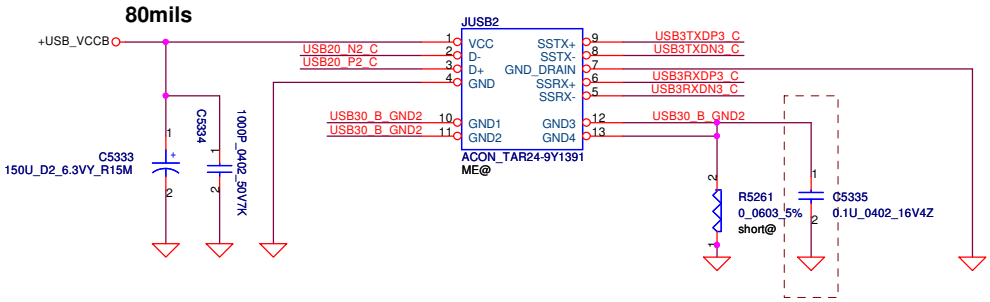

THIS SHEET OF ENGINEERING DRAWING IS THE PROPRIETARY PROPERTY OF COMPAL ELECTRONICS, INC. AND CONTAINS CONFIDENTIAL AND TRADE SECRET INFORMATION. THIS SHEET MAY NOT BE TRANSFERED FROM THE CUSTODY OF THE COMPETENT DIVISION OF R&D DEPARTMENT EXCEPT AS AUTHORIZED BY COMPAL ELECTRONICS, INC. NEITHER THIS SHEET NOR THE INFORMATION IT CONTAINS MAY BE USED BY OR DISCLOSED TO ANY THIRD PARTY WITHOUT PRIOR WRITTEN CONSENT OF COMPAL ELECTRONICS, INC.

Security Classification	Compal Secret Data		
Issued Date	2011/05/16	Deciphered Date	2013/05/16

Compal Electronics, Inc.

Title: USB3.0/2.0 CONN-R

Size: Custom | Document Number: LA-8671P_SDV | Rev: 1.0

Date: Friday, July 27, 2012 | Sheet 27 of 50

www.rosefix.com

Power down (PD#) power stage for save power
0V: Power down power stage
3.3V: Power up power stage

Place near Pin25
Place near Pin38
Place near Pin1
Place near Pin9
Vendor Recommand add 10UF

EMI

Vendor recommend. 2.2u
Vendor recommend. 2.2K
external MIC
Internal Speaker
Headphone
Place next to pin 27

MIC Sense
R940 place near pin13

SA000058310
Change symbol

VENDOR recommend

PC Beep
EC Beep
ICH Beep
Vendor Recommand connect to GNDA

Pin Assignment	Location	Function
SPK-OUT (Pin40/41/44/45)	Internal	Int Speaker
Capless HP-OUT (Pin32/33)	External	Headphone out
MIC1 (Pin21/22)	External	Mic in

EMI

Combo Jack detect (normal open)

PN :SCA00000G00

Reserve for ESD request.

Rdc < 0.05 ohms
Rated Current > 2A
wide 25MIL
Width 20 mil
Internal Speaker
EMI
Speaker PN:DC030008W00

Reserve for RF

Security Classification	Compal Secret Data		
Issued Date	2011/05/16	Deciphered Date	2013/05/16

THIS SHEET OF ENGINEERING DRAWING IS THE PROPRIETARY PROPERTY OF COMPAL ELECTRONICS, INC. AND CONTAINS CONFIDENTIAL AND TRADE SECRET INFORMATION. THIS SHEET MAY NOT BE TRANSFERRED FROM THE CUSTODY OF THE COMPETENT DIVISION OF R&D DEPARTMENT EXCEPT AS AUTHORIZED BY COMPAL ELECTRONICS, INC. NEITHER THIS SHEET NOR THE INFORMATION IT CONTAINS MAY BE USED BY OR DISCLOSED TO ANY THIRD PARTY WITHOUT PRIOR WRITTEN CONSENT OF COMPAL ELECTRONICS, INC.

Compal Electronics, Inc.
Title: Audio Codec ALC3202
Size: Custom | Document Number: LA-8671P_SDV | Rev: 1.0
Date: Friday, July 27, 2012 | Sheet 28 of 50

www.rosefix.com

PN:DC230008E00

Choose normal-open type!

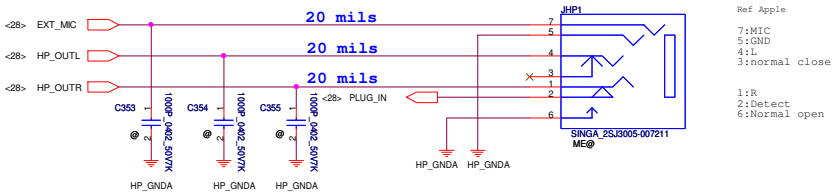

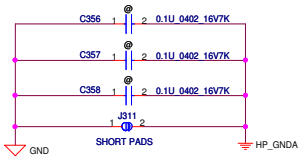

GND

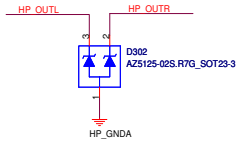

PN: SCA00001I00

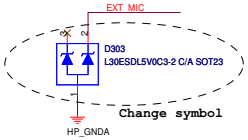

PN: SCA00001L00

Security Classification	Compal Secret Data		
Issued Date	2011/05/16	Deciphered Date	2013/05/16

THIS SHEET OF ENGINEERING DRAWING IS THE PROPRIETARY PROPERTY OF COMPAL ELECTRONICS, INC. AND CONTAINS CONFIDENTIAL AND TRADE SECRET INFORMATION. THIS SHEET MAY NOT BE TRANSFERED FROM THE CUSTODY OF THE COMPETENT DIVISION OF R&D DEPARTMENT EXCEPT AS AUTHORIZED BY COMPAL ELECTRONICS, INC. NEITHER THIS SHEET NOR THE INFORMATION IT CONTAINS MAY BE USED BY OR DISCLOSED TO ANY THIRD PARTY WITHOUT PRIOR WRITTEN CONSENT OF COMPAL ELECTRONICS, INC.

Compal Electronics, Inc.

Title: Combo Jack

Size	Document Number	Rev
C	LA-8671P_SDV	1.0

Date: Friday, July 27, 2012 Sheet 29 of 50

www.rosefix.com

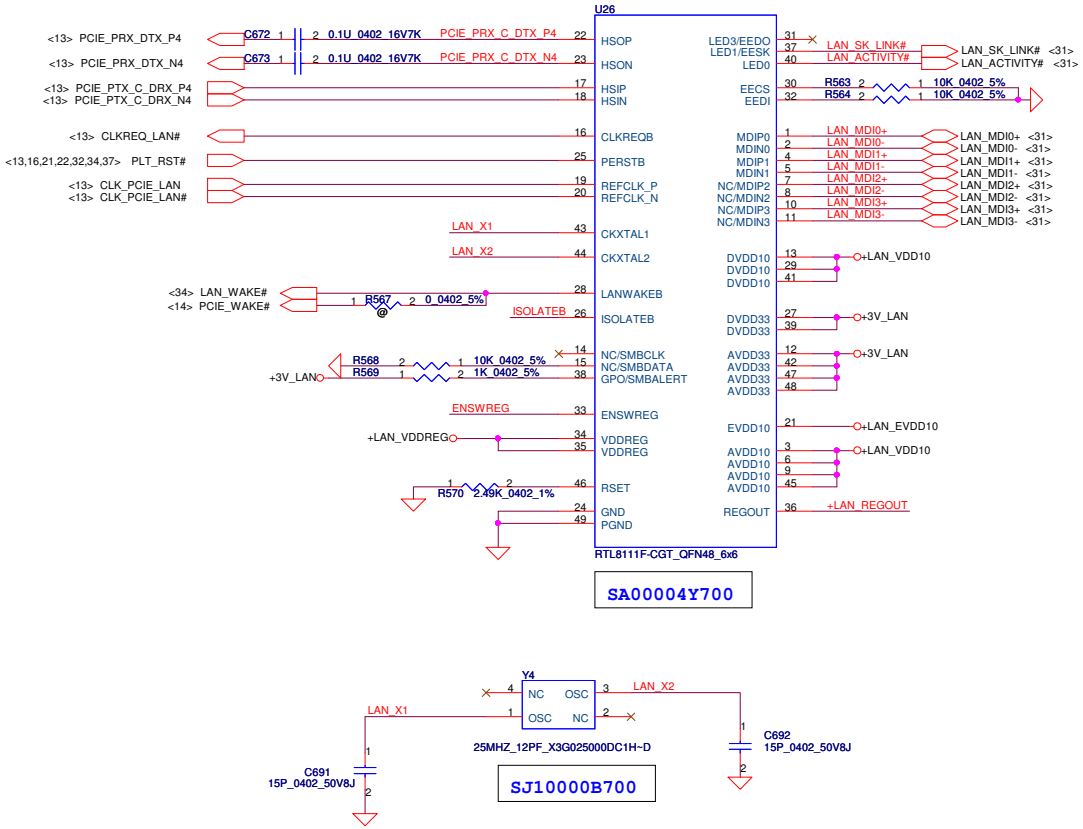

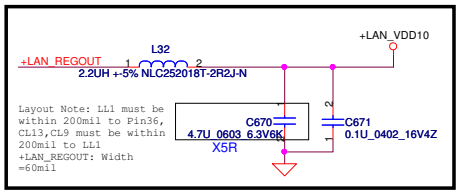

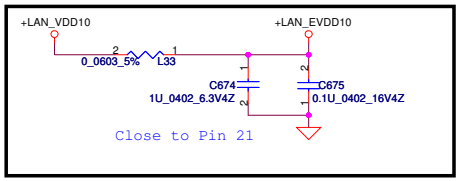

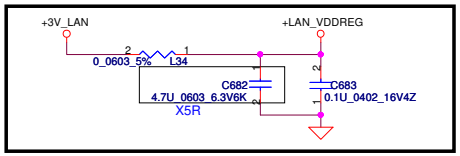

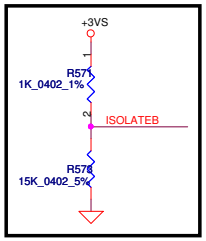

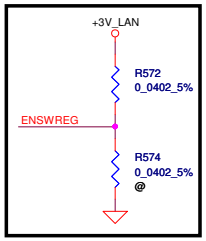

H: Enable internal Regular
L: Disable

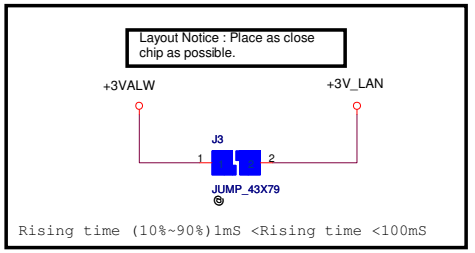

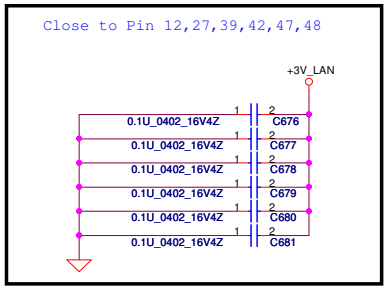

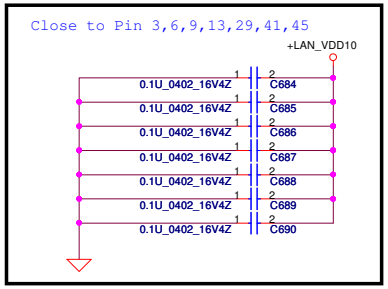

Security Classification	Compal Secret Data		
Issued Date	2010/08/25	Deciphered Date	2012/08/25

THIS SHEET OF ENGINEERING DRAWING IS THE PROPRIETARY PROPERTY OF COMPAL ELECTRONICS, INC. AND CONTAINS CONFIDENTIAL AND TRADE SECRET INFORMATION. THIS SHEET MAY NOT BE TRANSFERED FROM THE CUSTODY OF THE COMPETENT DIVISION OF R&D DEPARTMENT EXCEPT AS AUTHORIZED BY COMPAL ELECTRONICS, INC. NEITHER THIS SHEET NOR THE INFORMATION IT CONTAINS MAY BE USED BY OR DISCLOSED TO ANY THIRD PARTY WITHOUT PRIOR WRITTEN CONSENT OF COMPAL ELECTRONICS, INC.

Compal Electronics, Inc.

Title: LAN-RTL8111F

Size	Document Number	Rev
Custom	LA-8671P_SDV	1.0

Date: Friday, July 27, 2012 | Sheet 30 of 50

www.rosefix.com

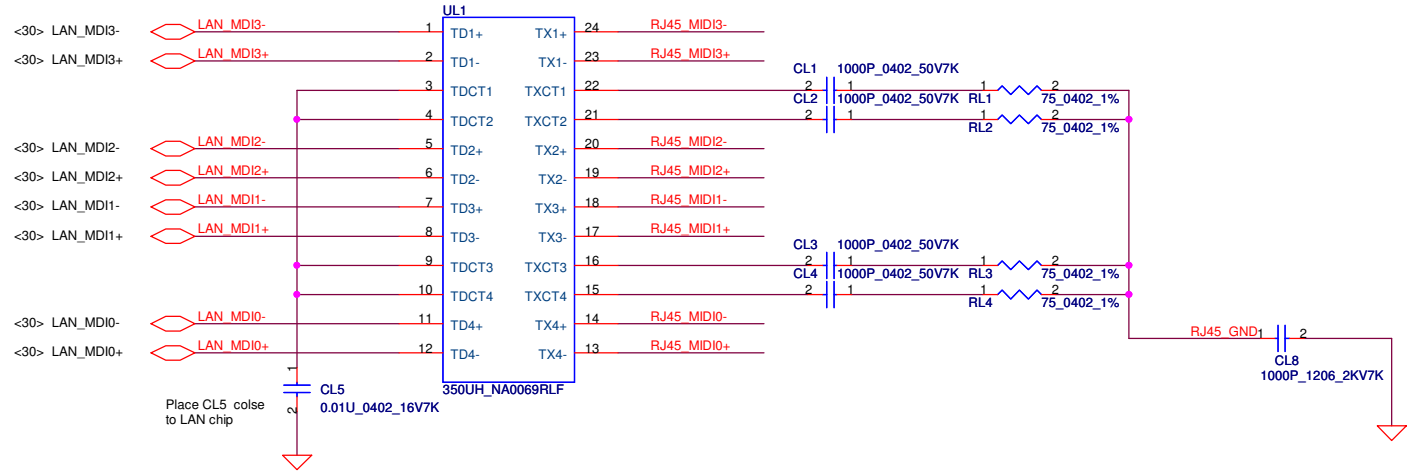

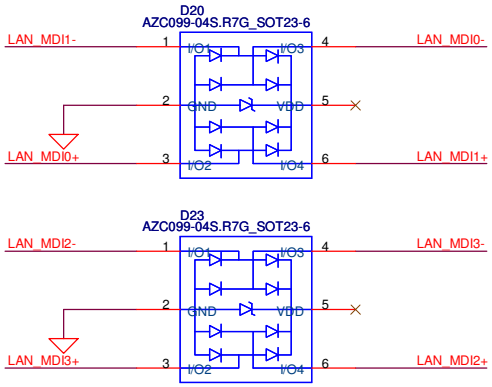

DC234005300
LAN Conn.

RL5,RL7 Vendor recommand 510 ohm

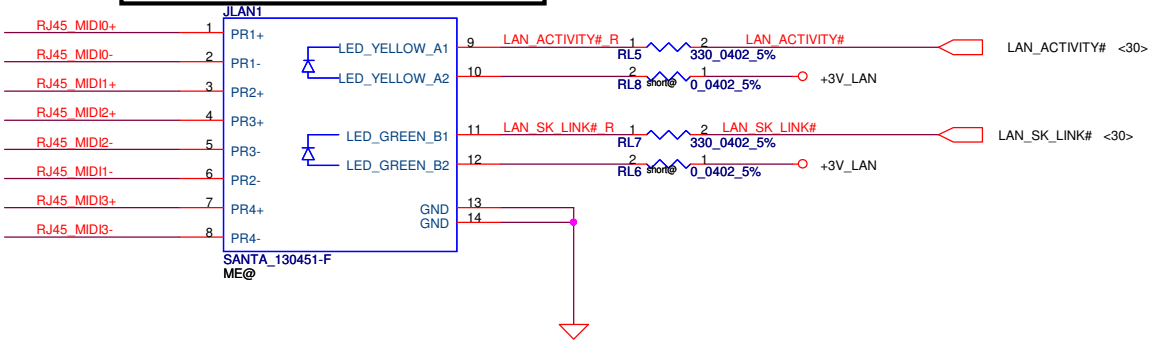

D20/D23
1'S PN:SC300001G00
2'S PN:SC300002E00

For EMI's request

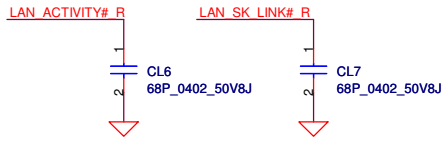

Security Classification	Compal Secret Data		
Issued Date	2010/08/25	Deciphered Date	2012/08/25

THIS SHEET OF ENGINEERING DRAWING IS THE PROPRIETARY PROPERTY OF COMPAL ELECTRONICS, INC. AND CONTAINS CONFIDENTIAL AND TRADE SECRET INFORMATION. THIS SHEET MAY NOT BE TRANSFERED FROM THE CUSTODY OF THE COMPETENT DIVISION OF R&D DEPARTMENT EXCEPT AS AUTHORIZED BY COMPAL ELECTRONICS, INC. NEITHER THIS SHEET NOR THE INFORMATION IT CONTAINS MAY BE USED BY OR DISCLOSED TO ANY THIRD PARTY WITHOUT PRIOR WRITTEN CONSENT OF COMPAL ELECTRONICS, INC.

Compal Electronics, Inc.

Title: LAN_Transformer

Size	Document Number	Rev
Custom	LA-8671P_SDV	1.0

Date: Friday, July 27, 2012 Sheet 31 of 50

www.rosefix.com

Mini-Express Card for WLAN/BT Combo(Half)

Mini-Express Card(WLAN/BT Combo)

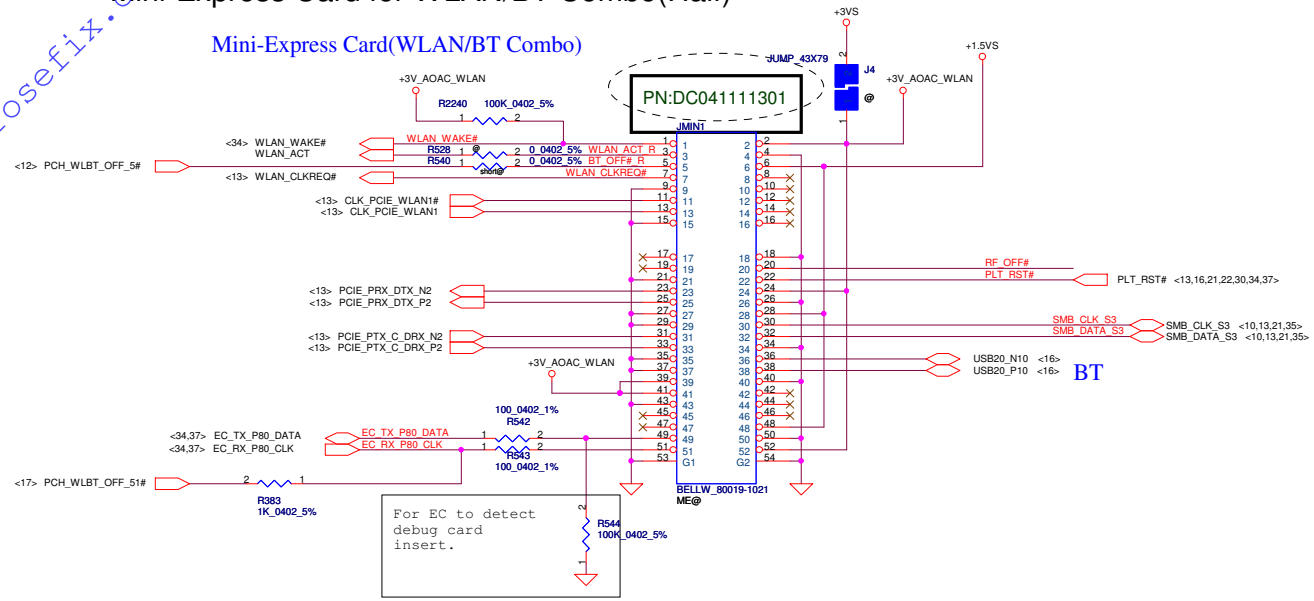

Mini-Express Card for WWAN/mSATA(Full)

Mini-Express Card(WWAN 3G)

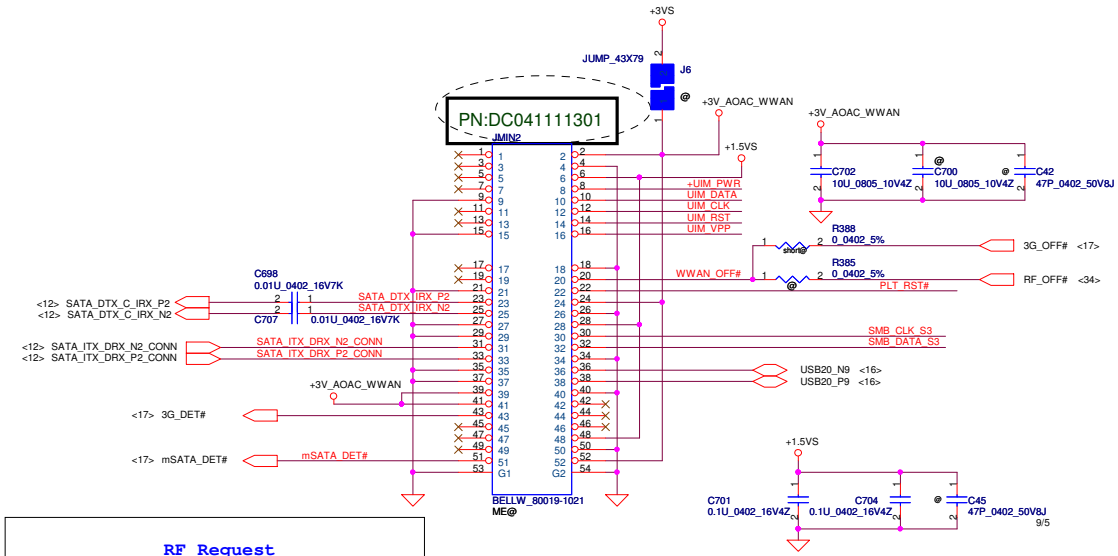

RF Request

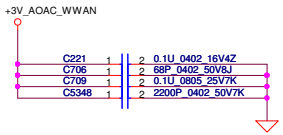

Close to JMIN2 on the same side

AOAC

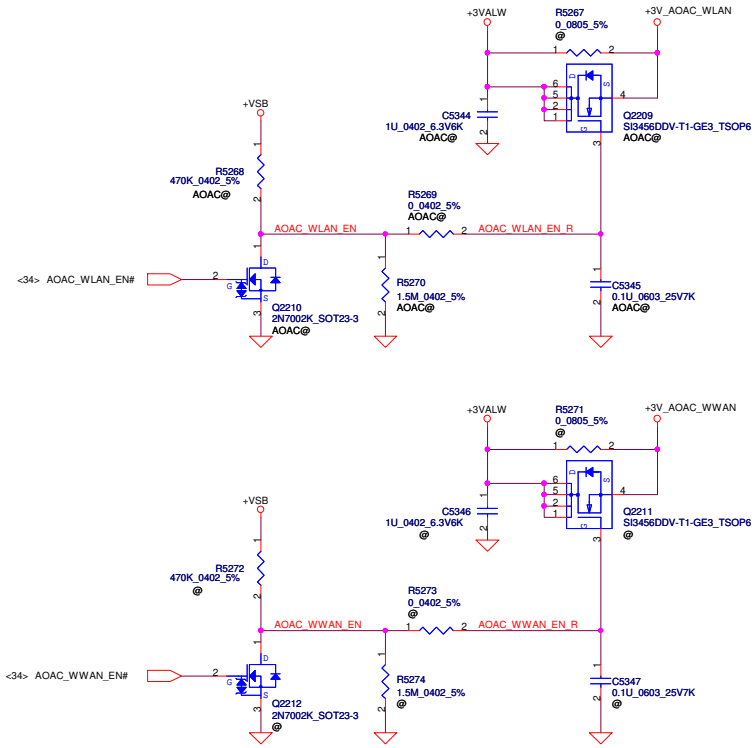

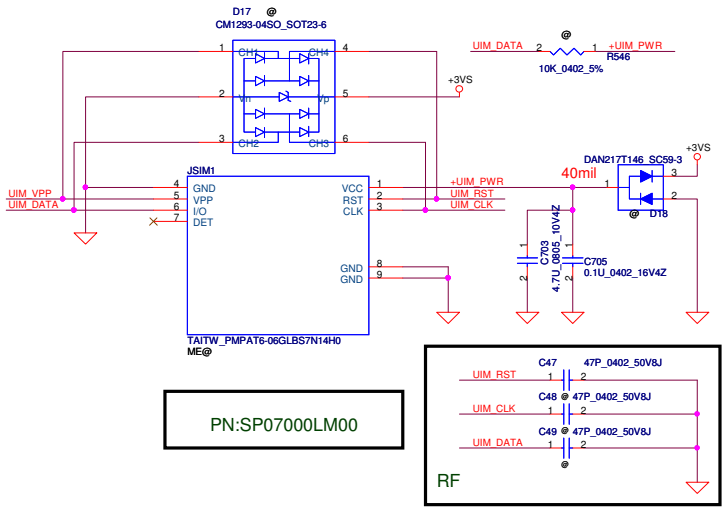

PN:SP07000LM00

Security Classification	Compal Secret Data		
Issued Date	2010/08/25	Deciphered Date	2012/08/25

THIS SHEET OF ENGINEERING DRAWING IS THE PROPRIETARY PROPERTY OF COMPAL ELECTRONICS, INC. AND CONTAINS CONFIDENTIAL AND TRADE SECRET INFORMATION. THIS SHEET MAY NOT BE TRANSFERED FROM THE CUSTODY OF THE COMPETENT DIVISION OF R&D DEPARTMENT EXCEPT AS AUTHORIZED BY COMPAL ELECTRONICS, INC. NEITHER THIS SHEET NOR THE INFORMATION IT CONTAINS MAY BE USED BY OR DISCLOSED TO ANY THIRD PARTY WITHOUT PRIOR WRITTEN CONSENT OF COMPAL ELECTRONICS, INC.

Compal Electronics, Inc.			
Title	WLAN/BT/WWAN/m-SATA		
Size: Custom	Document Number: LA-8671P_SDV		Rev: 1.0
Date: Friday, July 27, 2012	Sheet 32 of 50		

www.rosefly.com

Close U30

REMOTE1+ — C760 2200P_0402_50V7K — REMOTE1-

REMOTE2+ — C761 2200P_0402_50V7K — REMOTE2-

Fintek thermal sensor
placed near by BOT DRAM

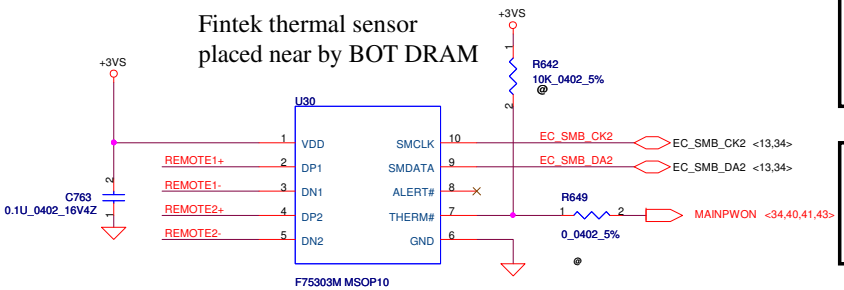

Address 1001_101xb

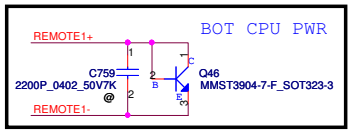

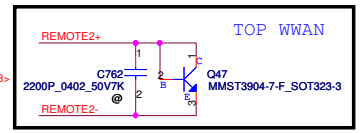

REMOTE1,2+/-:
Trace width/space:10/10 mil
Trace length:<8"

FAN +5VS DROOP

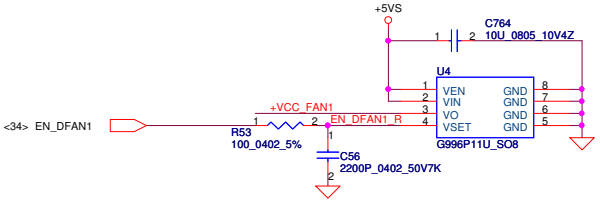

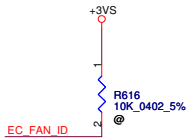

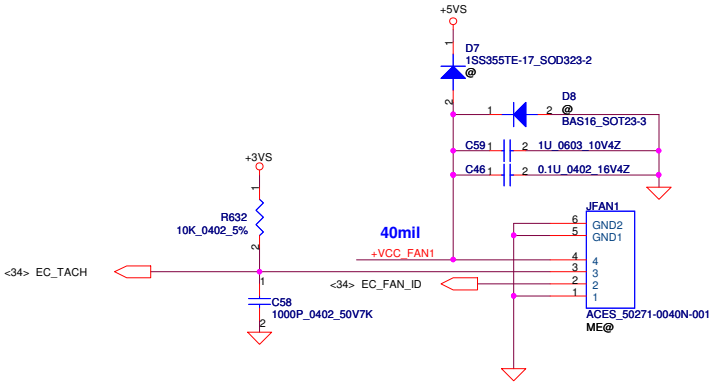

SP02000TS00

APS G-Sensor

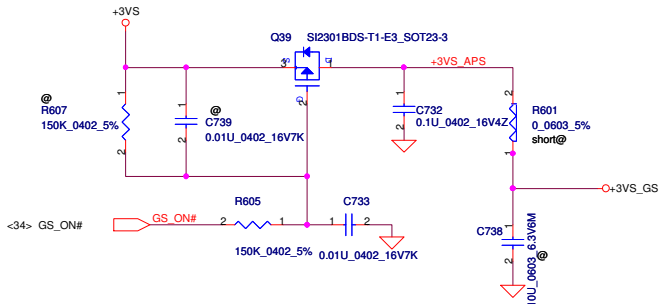

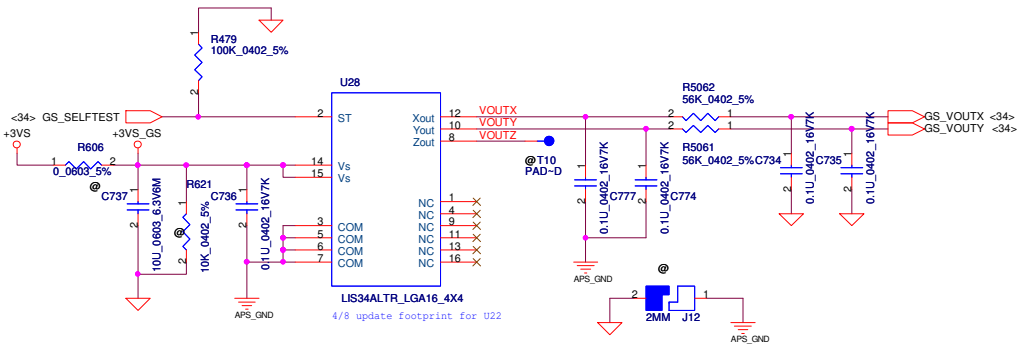

Security Classification	Compal Secret Data		
Issued Date	2010/08/25	Deciphered Date	2012/08/25

THIS SHEET OF ENGINEERING DRAWING IS THE PROPRIETARY PROPERTY OF COMPAL ELECTRONICS, INC. AND CONTAINS CONFIDENTIAL AND TRADE SECRET INFORMATION. THIS SHEET MAY NOT BE TRANSFERED FROM THE CUSTODY OF THE COMPETENT DIVISION OF R&D DEPARTMENT EXCEPT AS AUTHORIZED BY COMPAL ELECTRONICS, INC. NEITHER THIS SHEET NOR THE INFORMATION IT CONTAINS MAY BE USED BY OR DISCLOSED TO ANY THIRD PARTY WITHOUT PRIOR WRITTEN CONSENT OF COMPAL ELECTRONICS, INC.

Compal Electronics,Ltd.

Title: FintekF57303_Thermal sensor/FAN

Size: Custom | Document Number: LA-8671P_SDV | Rev: 1.0

Date: Friday, July 27, 2012 | Sheet 33 of 50

www.roseflx.com

J18 : Open
J19 : Close

GPIO check with R16
1121 modify EC pin define.

Vcc	3.3V +/- 5%				
R2210	100K +/- 1%				
Board ID	R2213	V_{AD_BID} min	V_{AD_BID} typ	V_{AD_BID} max	
0	0K +/- 5%	0 V	0 V	0 V	SDV
1	8.2K +/- 5%	0.216 V	0.250 V	0.289 V	FVT
2	18K +/- 5%	0.436 V	0.503 V	0.538 V	SIT
3	33K +/- 5%	0.712 V	0.819 V	0.875 V	SIT-R
4	56K +/- 5%	1.036 V	1.185 V	1.264 V	SVT

ESD Reserve Close to EC

Security Classification	Compal Secret Data		
Issued Date	2010/08/25	Deciphered Date	2012/08/25

THIS SHEET OF ENGINEERING DRAWING IS THE PROPRIETARY PROPERTY OF COMPAL ELECTRONICS, INC. AND CONTAINS CONFIDENTIAL AND TRADE SECRET INFORMATION. THIS SHEET MAY NOT BE TRANSFERED FROM THE CUSTODY OF THE COMPETENT DIVISION OF R&D DEPARTMENT EXCEPT AS AUTHORIZED BY COMPAL ELECTRONICS, INC. NEITHER THIS SHEET NOR THE INFORMATION IT CONTAINS MAY BE USED BY OR DISCLOSED TO ANY THIRD PARTY WITHOUT PRIOR WRITTEN CONSENT OF COMPAL ELECTRONICS, INC.

Compal Electronics, Inc.

Title: EC KB9012

Size: Custom | Document Number: LA-8671P_SDV | Rev: 1.0

Date: Friday, July 27, 2012 | Sheet 34 of 50

www.kosmiz.com

INT_KBD Conn.

KSI[0..7] → KSI[0..7] <34>
KSO[0..15] → KSO[0..15] <34>

KSO2	C778	1 2	@100P_0402_50V8J
KSO15	C780	1 2	@100P_0402_50V8J
KSO6	C782	1 2	@100P_0402_50V8J
KSO8	C784	1 2	@100P_0402_50V8J
KSO13	C786	1 2	@100P_0402_50V8J
KSO12	C788	1 2	@100P_0402_50V8J
KSO11	C790	1 2	@100P_0402_50V8J
KSO10	C792	1 2	@100P_0402_50V8J
KSO3	C794	1 2	@100P_0402_50V8J
KSO4	C796	1 2	@100P_0402_50V8J
KSI0	C798	1 2	@100P_0402_50V8J
KSO0	C800	1 2	@100P_0402_50V8J

CONN PIN define need double check

IPD_LEFT	C814	1 2	@100P_0402_50V8J
IPD_MIDDLE	C819	1 2	@100P_0402_50V8J
IPD_RIGHT	C805	1 2	@100P_0402_50V8J
KSO1	C779	1 2	@100P_0402_50V8J
KSO7	C781	1 2	@100P_0402_50V8J
KSI2	C783	1 2	@100P_0402_50V8J
KSO5	C785	1 2	@100P_0402_50V8J
KSI3	C787	1 2	@100P_0402_50V8J
KSO14	C789	1 2	@100P_0402_50V8J
KSI7	C791	1 2	@100P_0402_50V8J
KSI6	C793	1 2	@100P_0402_50V8J
KSI5	C795	1 2	@100P_0402_50V8J
KSI4	C797	1 2	@100P_0402_50V8J
KSO9	C799	1 2	@100P_0402_50V8J
KSI1	C801	1 2	@100P_0402_50V8J

Reserve for ESD.

INT_KBD Conn.

PN:SP01000YH00

JKB1

KSI1	1	1	
KSI7	2	2	
KSI6	3	3	
KSO9	4	4	
KSI4	5	5	
KSI5	6	6	
KSO0	7	7	
KSI2	8	8	
KSI3	9	9	
KSO5	10	10	
KSO1	11	11	
KSI0	12	12	
KSO2	13	13	
KSO4	14	14	
KSO7	15	15	
KSO8	16	16	
KSO6	17	17	
KSO3	18	18	
KSO12	19	19	
KSO13	20	20	
KSO14	21	21	
KSO11	22	22	
KSO10	23	23	
KSO15	24	24	
	25	25	
IPD_LEFT	26	26	
IPD_MIDDLE	27	27	
IPD_RIGHT	28	28	
	29	29	
	30	30	
	31	GND1	
	32	GND2	

M1(Left BUTTON)
M2(Center BUTTON)
M3(Right BUTTON)

JAE_FL4S030HA3R3000A-DT
ME@

Track point

PN:SP01001CH00

JTP2

	1	1	
	2	2	
+5VS	3	3	
	4	4	
TP_CLK2	5	5	
IPD_LEFT	6	6	
IPD_RIGHT	7	7	
IPD_MIDDLE	8	8	
<34> TP_RESET	9	9	
TP_RESET	9	10	
TP_DATA2	10	11	
	11	GND	
	12	GND	

ACES_50524-0100N-001
ME@

+5VS

TP_CLK2	R660	1 @ 2	4.7K_0402_5%
TP_DATA2	R668	1 @ 2	4.7K_0402_5%
TP_RESET	R672	1 @ 2	4.7K_0402_5%
CP_RESET#	R211	2 1	100K_0402_1%
TP_DETECT	R671	2 1	0_0402_5%

Click pad 10PIN

SP01001AL00

+5VS

<34> TP_DATA
<34> TP_CLK
<34> CP_RESET#

TP_DATA
TP_CLK
CP_RESET#

<10,13,21,32> SMB_DATA_S3
SMB_DATA_S3 — R673 0_0402_5%

<10,13,21,32> SMB_CLK_S3
SMB_CLK_S3 — R674 0_0402_5%

@C849 100P_0402_50V8J
@C850 100P_0402_50V8J

JTP1

	1	1	
	2	2	
	3	3	
	4	4	
CP_DATA	5	5	
TP_CLK2	6	6	
TP_DATA2	7	7	
TP_DETECT	8	8	
CP_CLK	9	9	
	10	10	GND
		11	
		12	GND

ACES_51522-01001-001
ME@

TP_CLK
TP_DATA
D37 PJDLC05_SOT23-3 @

TP_DATA2
TP_CLK2
D38 PJDLC05_SOT23-3 @

PN: SCA00000U10 X 2

Security Classification	Compal Secret Data		
Issued Date	2010/08/25	Deciphered Date	2012/08/25

THIS SHEET OF ENGINEERING DRAWING IS THE PROPRIETARY PROPERTY OF COMPAL ELECTRONICS, INC. AND CONTAINS CONFIDENTIAL AND TRADE SECRET INFORMATION. THIS SHEET MAY NOT BE TRANSFERED FROM THE CUSTODY OF THE COMPETENT DIVISION OF R&D DEPARTMENT EXCEPT AS AUTHORIZED BY COMPAL ELECTRONICS, INC. NEITHER THIS SHEET NOR THE INFORMATION IT CONTAINS MAY BE USED BY OR DISCLOSED TO ANY THIRD PARTY WITHOUT PRIOR WRITTEN CONSENT OF COMPAL ELECTRONICS, INC.

Compal Electronics, Inc.

Title: KB /SW .

Size	Document Number	Rev
Custom	LA-8671P_SDV	1.0

Date: Friday, July 27, 2012 | Sheet 35 of 50

www.rosefix.com

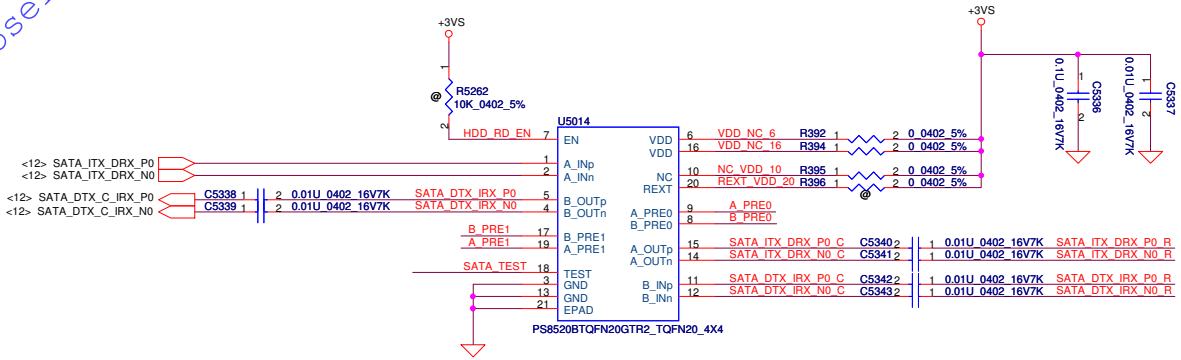

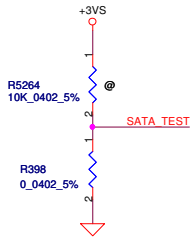

	TEST (Internal Low)
Normal Mode (Default)	LOW
Test Mode	HIGH

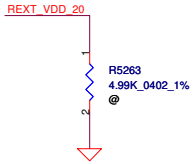

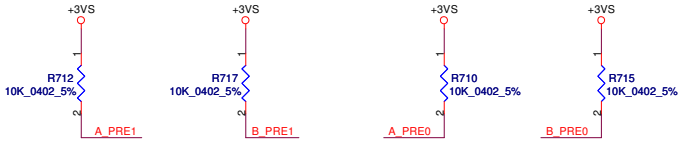

Remove pull-low

	A_PRE1/B_PRE1 (Internal pull Low)	A_PRE0/B_PRE0 (Internal pull Low)
0dB, no pre-emphasis	Low	Low
1.5dB pre-emphasis is selected	Low	High
2.5dB pre-emphasis is selected	High	Low
3.5dB pre-emphasis is selected	High	High

TPM

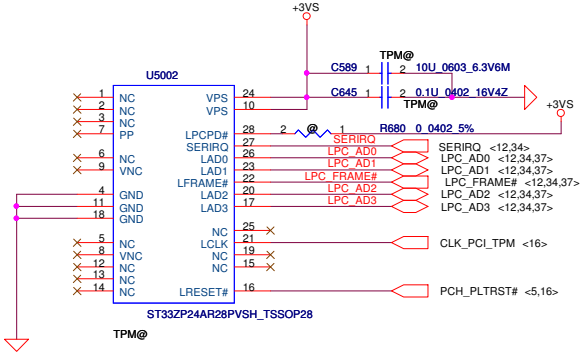

SA00005C020 **Need to update symbol**

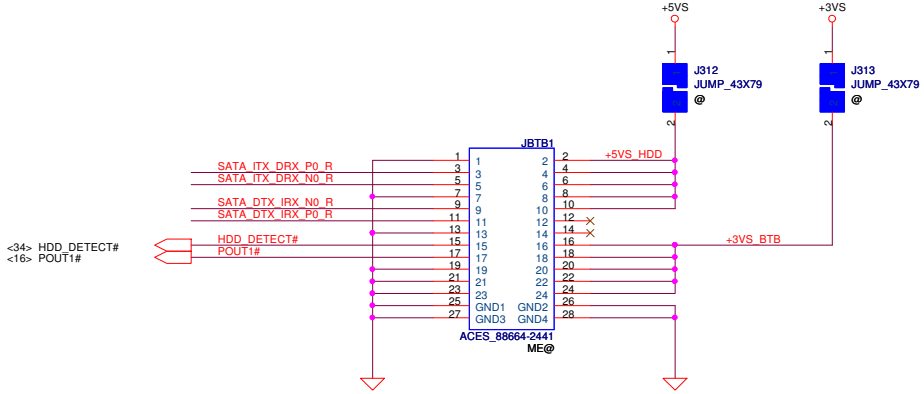

Security Classification	Compal Secret Data		
Issued Date	2010/08/25	Deciphered Date	2012/08/25

THIS SHEET OF ENGINEERING DRAWING IS THE PROPRIETARY PROPERTY OF COMPAL ELECTRONICS, INC. AND CONTAINS CONFIDENTIAL AND TRADE SECRET INFORMATION. THIS SHEET MAY NOT BE TRANSFERED FROM THE CUSTODY OF THE COMPETENT DIVISION OF R&D DEPARTMENT EXCEPT AS AUTHORIZED BY COMPAL ELECTRONICS, INC. NEITHER THIS SHEET NOR THE INFORMATION IT CONTAINS MAY BE USED BY OR DISCLOSED TO ANY THIRD PARTY WITHOUT PRIOR WRITTEN CONSENT OF COMPAL ELECTRONICS, INC.

Compal Electronics, Inc.

Title: HDD BTB Connector/TPM

Size: Custom | Document Number: LA-8671P_SDV | Rev: 1.0

Date: Friday, July 27, 2012 | Sheet 36 of 50

www.rosefix.com

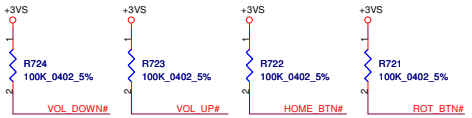

SP010016L00

AC-IN LED (Color : Green)

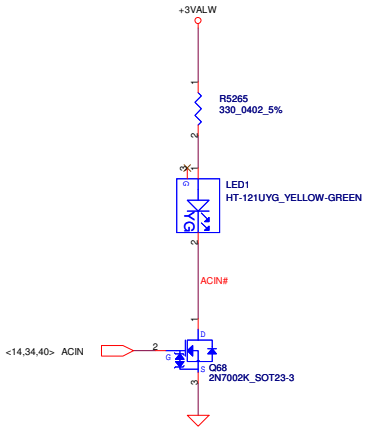

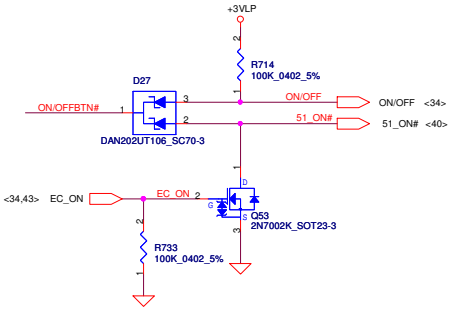

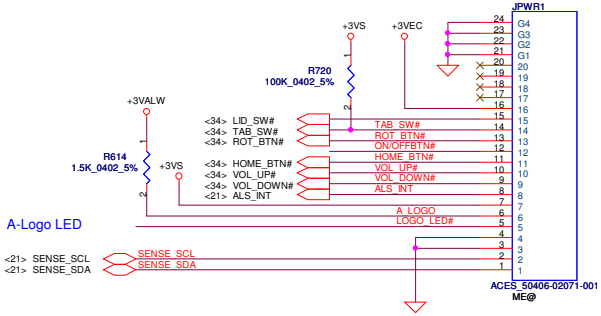

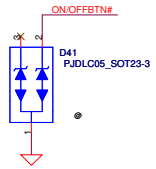

PN:SCA00000U10

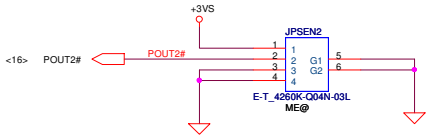

Power Board connector

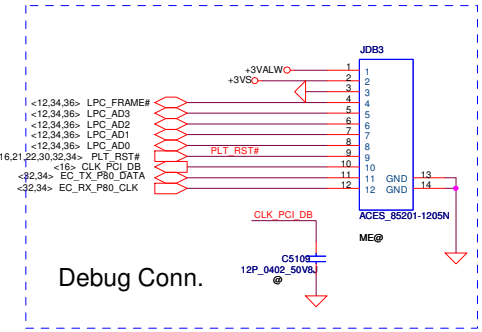

Debug Conn.

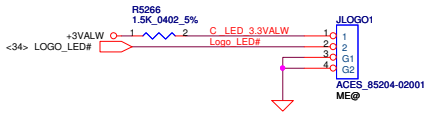

C-logo Conn.

BOTTOM SIDE

SN111005800 by ME drawing

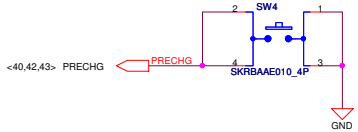

For Power Reset

Security Classification	Compal Secret Data		
Issued Date	2010/08/25	Deciphered Date	2012/08/25

THIS SHEET OF ENGINEERING DRAWING IS THE PROPRIETARY PROPERTY OF COMPAL ELECTRONICS, INC. AND CONTAINS CONFIDENTIAL AND TRADE SECRET INFORMATION. THIS SHEET MAY NOT BE TRANSFERED FROM THE CUSTODY OF THE COMPETENT DIVISION OF R&D DEPARTMENT EXCEPT AS AUTHORIZED BY COMPAL ELECTRONICS, INC. NEITHER THIS SHEET NOR THE INFORMATION IT CONTAINS MAY BE USED BY OR DISCLOSED TO ANY THIRD PARTY WITHOUT PRIOR WRITTEN CONSENT OF COMPAL ELECTRONICS, INC.

Compal Electronics,Ltd.

Title: other IO connector

Size	Document Number	Rev
Custom	LA-8671P_SDV	1.0

Date: Friday, July 27, 2012 Sheet 37 of 50

www.rosefix.com

PT-H 20 SCREW HOLE

H_2P3

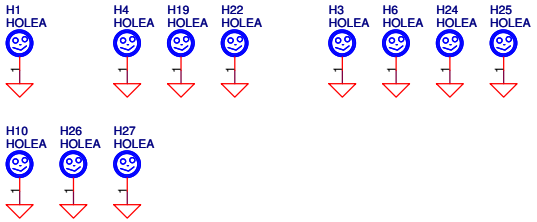

H_3P3

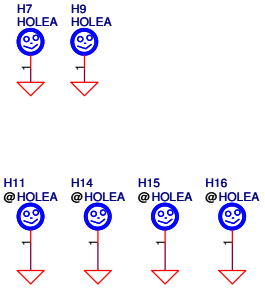

H_6P0

NON-PT-H 1 SCREW HOLE

H_2P4N

Security Classification	Compal Secret Data		
Issued Date	2010/08/25	Deciphered Date	2012/08/25

THIS SHEET OF ENGINEERING DRAWING IS THE PROPRIETARY PROPERTY OF COMPAL ELECTRONICS, INC. AND CONTAINS CONFIDENTIAL AND TRADE SECRET INFORMATION. THIS SHEET MAY NOT BE TRANSFERED FROM THE CUSTODY OF THE COMPETENT DIVISION OF R&D DEPARTMENT EXCEPT AS AUTHORIZED BY COMPAL ELECTRONICS, INC. NEITHER THIS SHEET NOR THE INFORMATION IT CONTAINS MAY BE USED BY OR DISCLOSED TO ANY THIRD PARTY WITHOUT PRIOR WRITTEN CONSENT OF COMPAL ELECTRONICS, INC.

Compal Electronics, Inc.

Title: SCREW HOLE

Size	Document Number	Rev
Custom	LA-8671P_SDV	1.0

Date: Friday, July 27, 2012 Sheet 38 of 50

www.rosefix.com

+5VALW TO +5VS

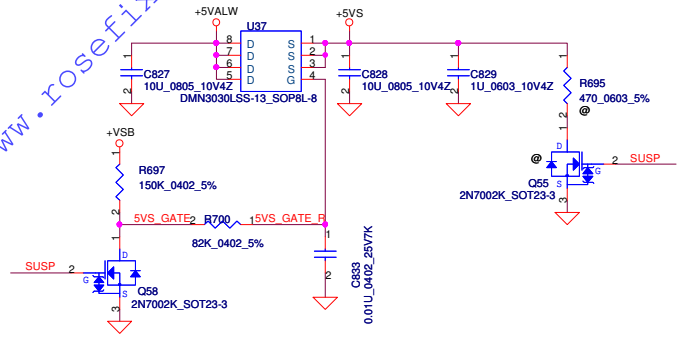

+3VALW TO +3VS

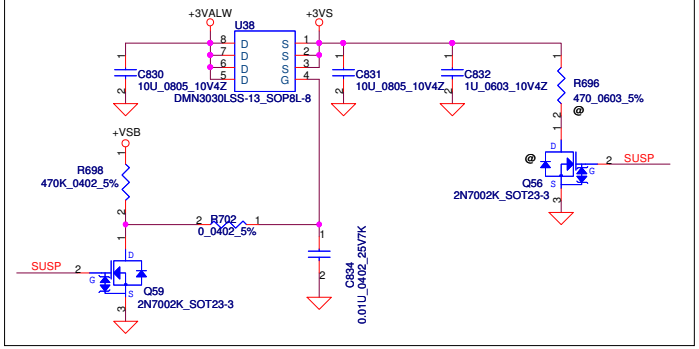

+1.5V to +1.5VS

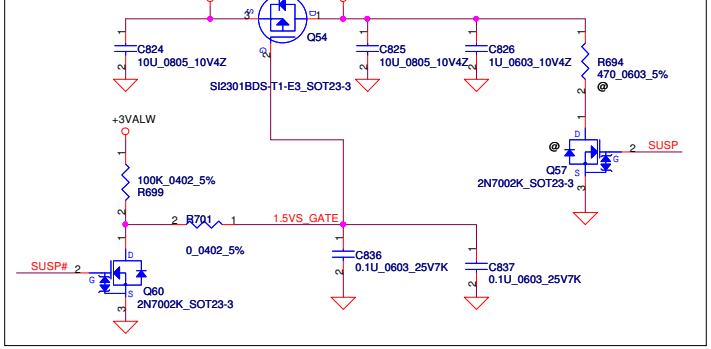

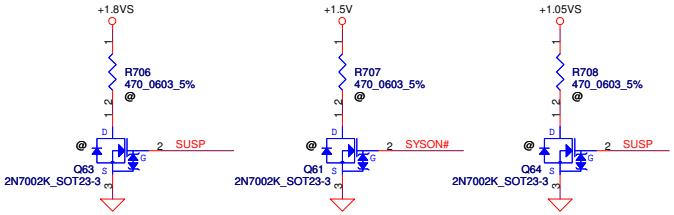

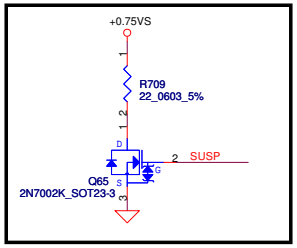

For Intel S3 Power Reduction.

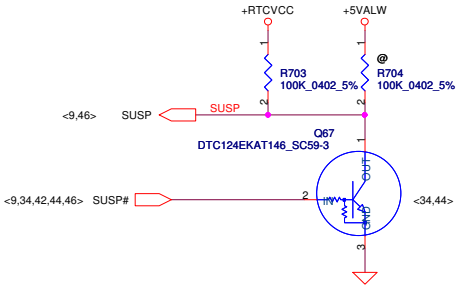

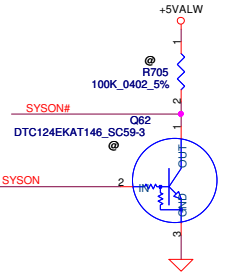

Security Classification	Compal Secret Data		
Issued Date	2010/08/25	Deciphered Date	2012/08/25

THIS SHEET OF ENGINEERING DRAWING IS THE PROPRIETARY PROPERTY OF COMPAL ELECTRONICS, INC. AND CONTAINS CONFIDENTIAL AND TRADE SECRET INFORMATION. THIS SHEET MAY NOT BE TRANSFERED FROM THE CUSTODY OF THE COMPETENT DIVISION OF R&D DEPARTMENT EXCEPT AS AUTHORIZED BY COMPAL ELECTRONICS, INC. NEITHER THIS SHEET NOR THE INFORMATION IT CONTAINS MAY BE USED BY OR DISCLOSED TO ANY THIRD PARTY WITHOUT PRIOR WRITTEN CONSENT OF COMPAL ELECTRONICS, INC.

Compal Electronics, Inc.

Title: DC Interface

Size: Custom | Document Number: LA-8671P_SDV | Rev: 1.0

Date: Friday, July 27, 2012 | Sheet 39 of 50

www.rosefix.com

ADP_ID

AC Adapter	90W	65W
R(K ohm)	open	10
ADP_ID(V)	3.3	1.65
Detection voltage	>2.64	1.32~1.98

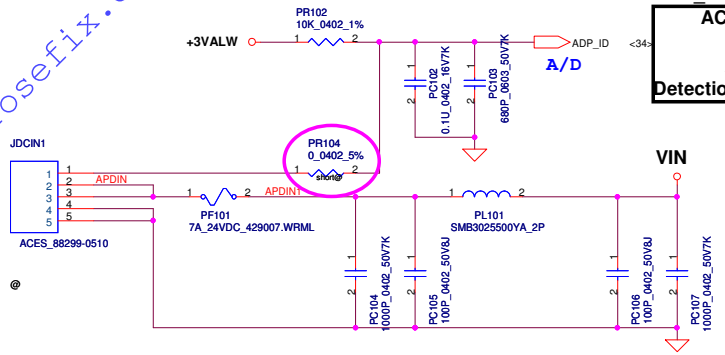

Vin Detector

	Min.	typ.	Max.
L-->H	17.430V	17.901V	18.384V
H-->L	16.976V	17.262V	17.728V

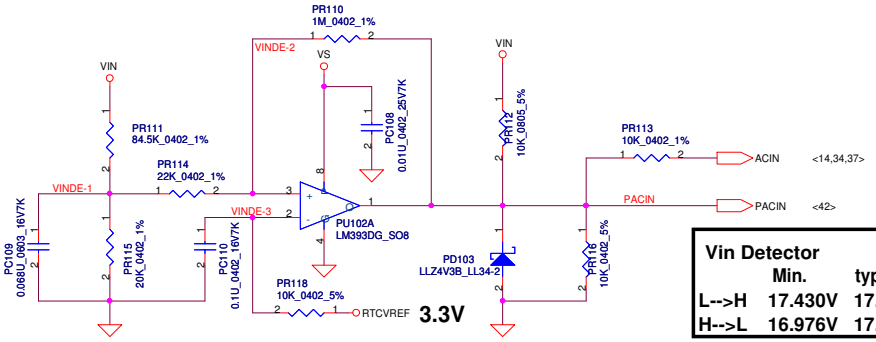

Precharge detector 15.97V/14.84V FOR ADAPTOR

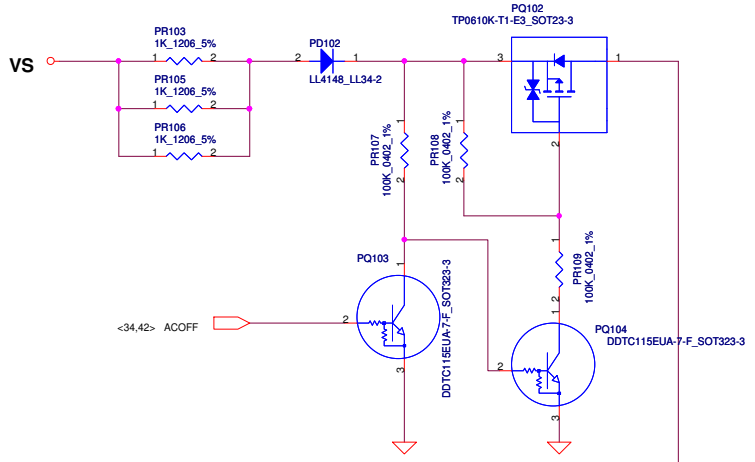

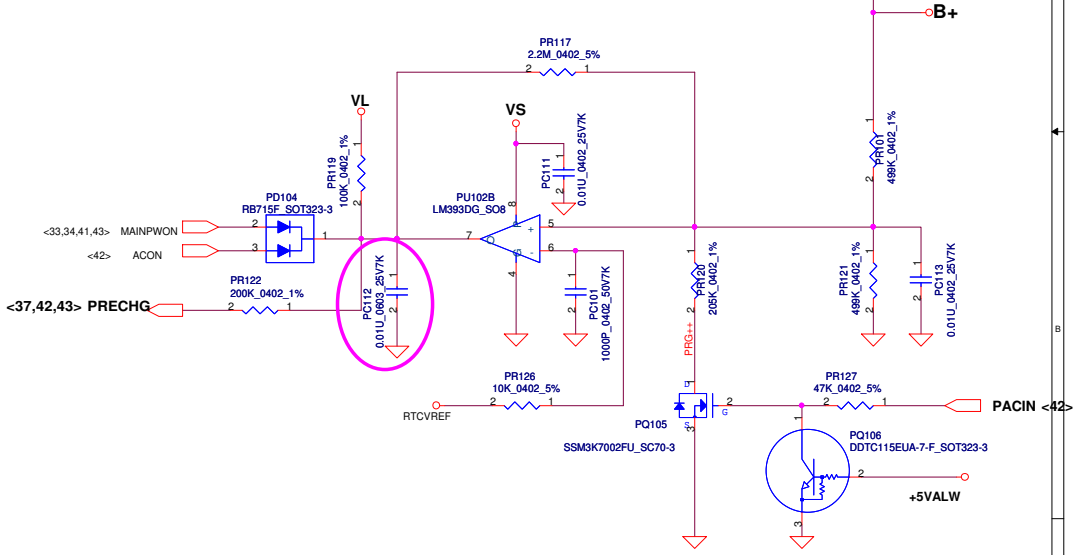

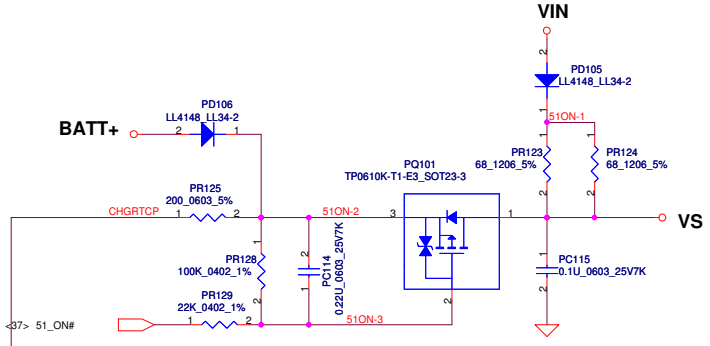

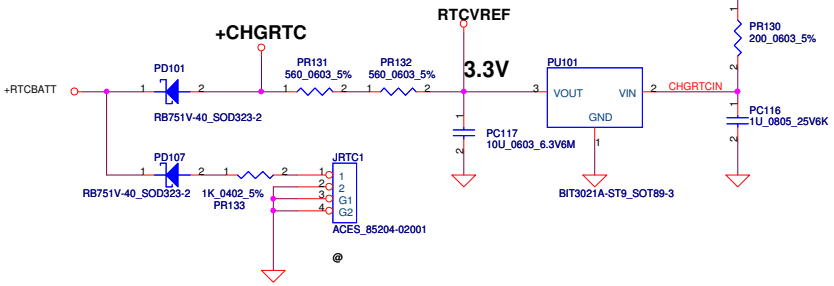

ACIN

Precharge detector	Min.	typ.	Max.
L-->H	14.991V	15.381V	15.782V
H-->L	13.860V	14.247V	14.621V

BATT ONLY

Precharge detector	Min.	typ.	Max.
L-->H	7.196V	7.349V	7.505V
H-->L	6.138V	6.214V	6.056V

Security Classification	Compal Secret Data		
Issued Date	2010/01/25	Deciphered Date	2010/12/31

THIS SHEET OF ENGINEERING DRAWING IS THE PROPRIETARY PROPERTY OF COMPAL ELECTRONICS, INC. AND CONTAINS CONFIDENTIAL AND TRADE SECRET INFORMATION. THIS SHEET MAY NOT BE TRANSFERED FROM THE CUSTODY OF THE COMPETENT DIVISION OF R&D DEPARTMENT EXCEPT AS AUTHORIZED BY COMPAL ELECTRONICS, INC. NEITHER THIS SHEET NOR THE INFORMATION IT CONTAINS MAY BE USED BY OR DISCLOSED TO ANY THIRD PARTY WITHOUT PRIOR WRITTEN CONSENT OF COMPAL ELECTRONICS, INC.

Compal Electronics, Inc.

Title: PWR DCIN / Vin Detector /Pre-charge

Size: Custom | Document Number: C38 Chief River Schematic | Rev: 0.4

Date: Friday, July 27, 2012 | Sheet 40 of 50

www.xfix.com

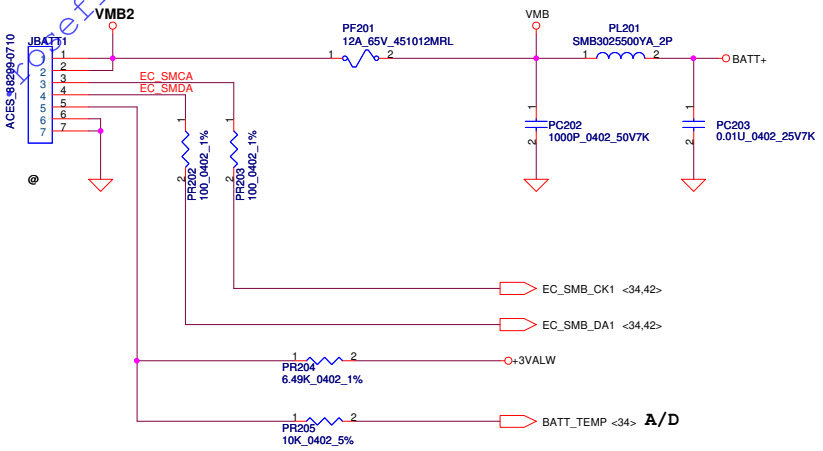

PH1 under CPU botten side :
CPU thermal protection at 93 +-3 degree C
Recovery at 56 +-3 degree C

For KB930 --> Keep PU201 circuit
(Vth = 1.25V)
For KB9012 (Red square) --> Remove PU201 circuit, but keep PR206
PH201, PR205, PR211,PQ201,PR208,PR212

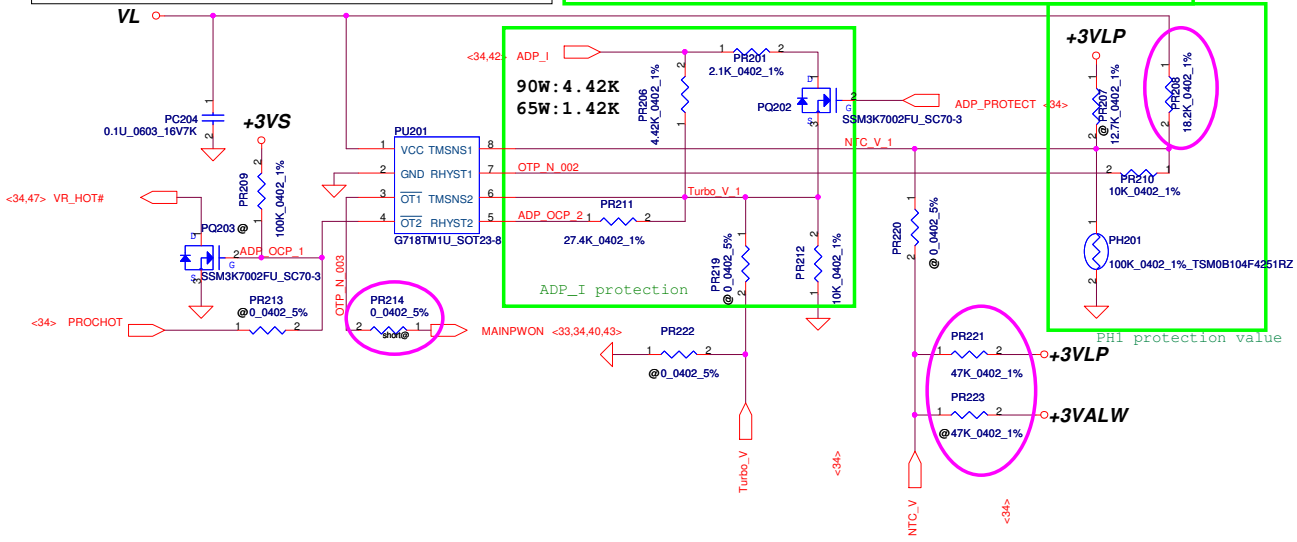

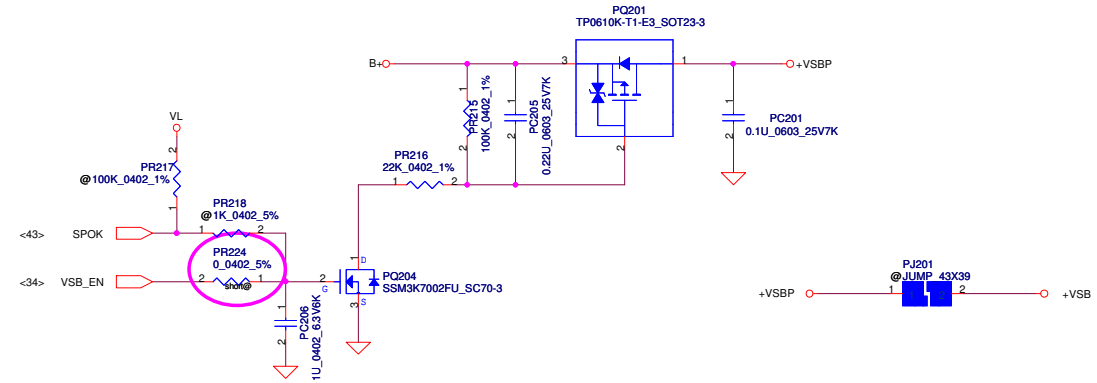

Security Classification	Compal Secret Data		
Issued Date	2010/01/25	Deciphered Date	2010/12/31

THIS SHEET OF ENGINEERING DRAWING IS THE PROPRIETARY PROPERTY OF COMPAL ELECTRONICS, INC. AND CONTAINS CONFIDENTIAL AND TRADE SECRET INFORMATION. THIS SHEET MAY NOT BE TRANSFERRED FROM THE CUSTODY OF THE COMPETENT DIVISION OF R&D DEPARTMENT EXCEPT AS AUTHORIZED BY COMPAL ELECTRONICS, INC. NEITHER THIS SHEET NOR THE INFORMATION IT CONTAINS MAY BE USED BY OR DISCLOSED TO ANY THIRD PARTY WITHOUT PRIOR WRITTEN CONSENT OF COMPAL ELECTRONICS, INC.

Compal Electronics, Inc.			
Title	PWR-BATTERY CONN/OTP		
Size	Document Number		Rev
Custom	C38 Chief River Schematic		0.4
Date:	Friday, July 27, 2012	Sheet	41 of 50

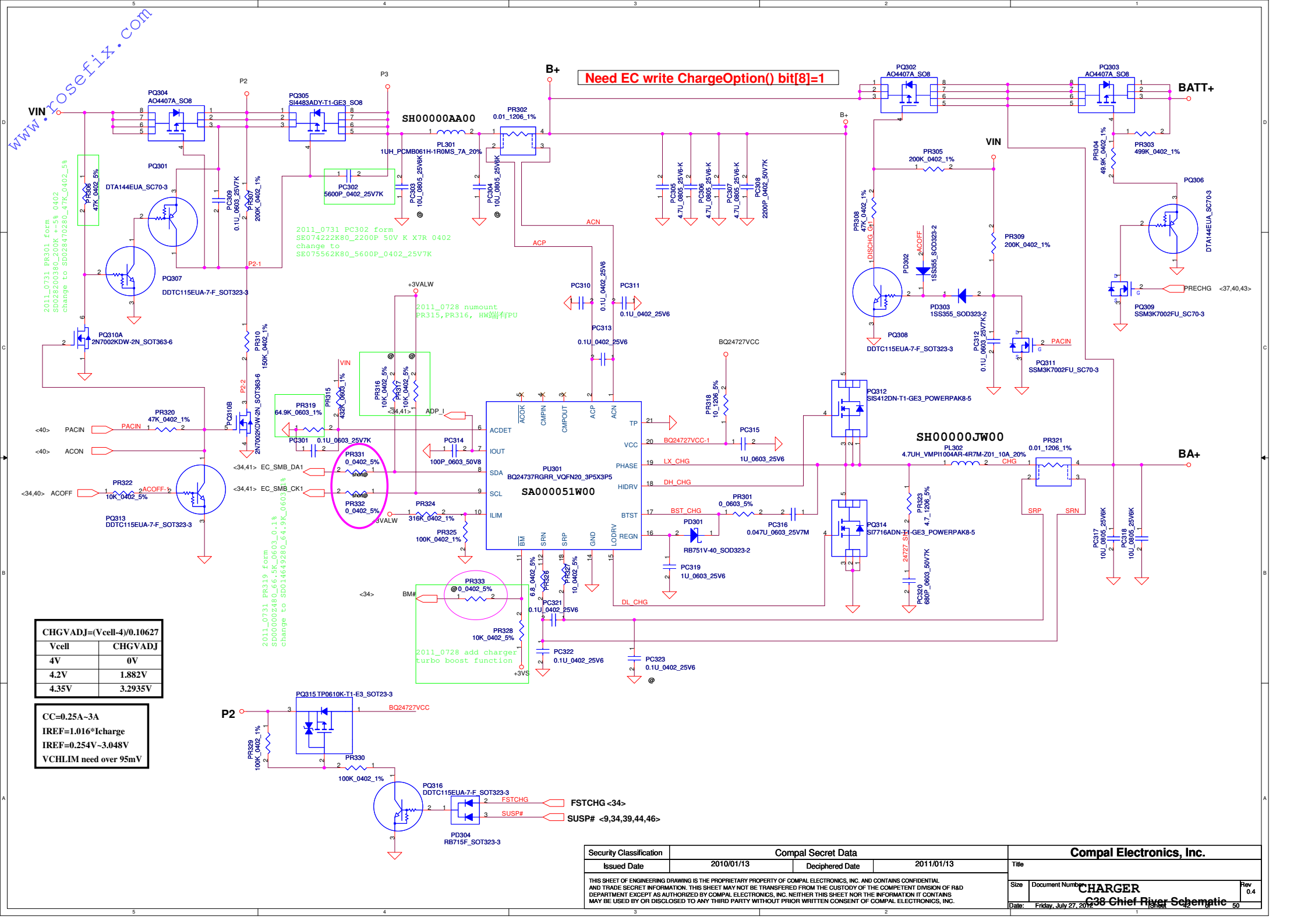

CHGVADJ=(Vcell-4)/0.10627	
Vcell	CHGVADJ
4V	0V
4.2V	1.882V
4.35V	3.2935V

CC=0.25A~3A
IREF=1.016*Icharge
IREF=0.254V~3.048V
VCHLIM need over 95mV

Security Classification	Compal Secret Data		
Issued Date	2010/01/13	Deciphered Date	2011/01/13

THIS SHEET OF ENGINEERING DRAWING IS THE PROPRIETARY PROPERTY OF COMPAL ELECTRONICS, INC. AND CONTAINS CONFIDENTIAL AND TRADE SECRET INFORMATION. THIS SHEET MAY NOT BE TRANSFERED FROM THE CUSTODY OF THE COMPETENT DIVISION OF R&D DEPARTMENT EXCEPT AS AUTHORIZED BY COMPAL ELECTRONICS, INC. NEITHER THIS SHEET NOR THE INFORMATION IT CONTAINS MAY BE USED BY OR DISCLOSED TO ANY THIRD PARTY WITHOUT PRIOR WRITTEN CONSENT OF COMPAL ELECTRONICS, INC.

Compal Electronics, Inc.

Title: CHARGER

Size | Document Number | Rev: 0.4

Date: Friday, July 27, 2012 | Sheet 42 of 50

C38 Chief River Schematic

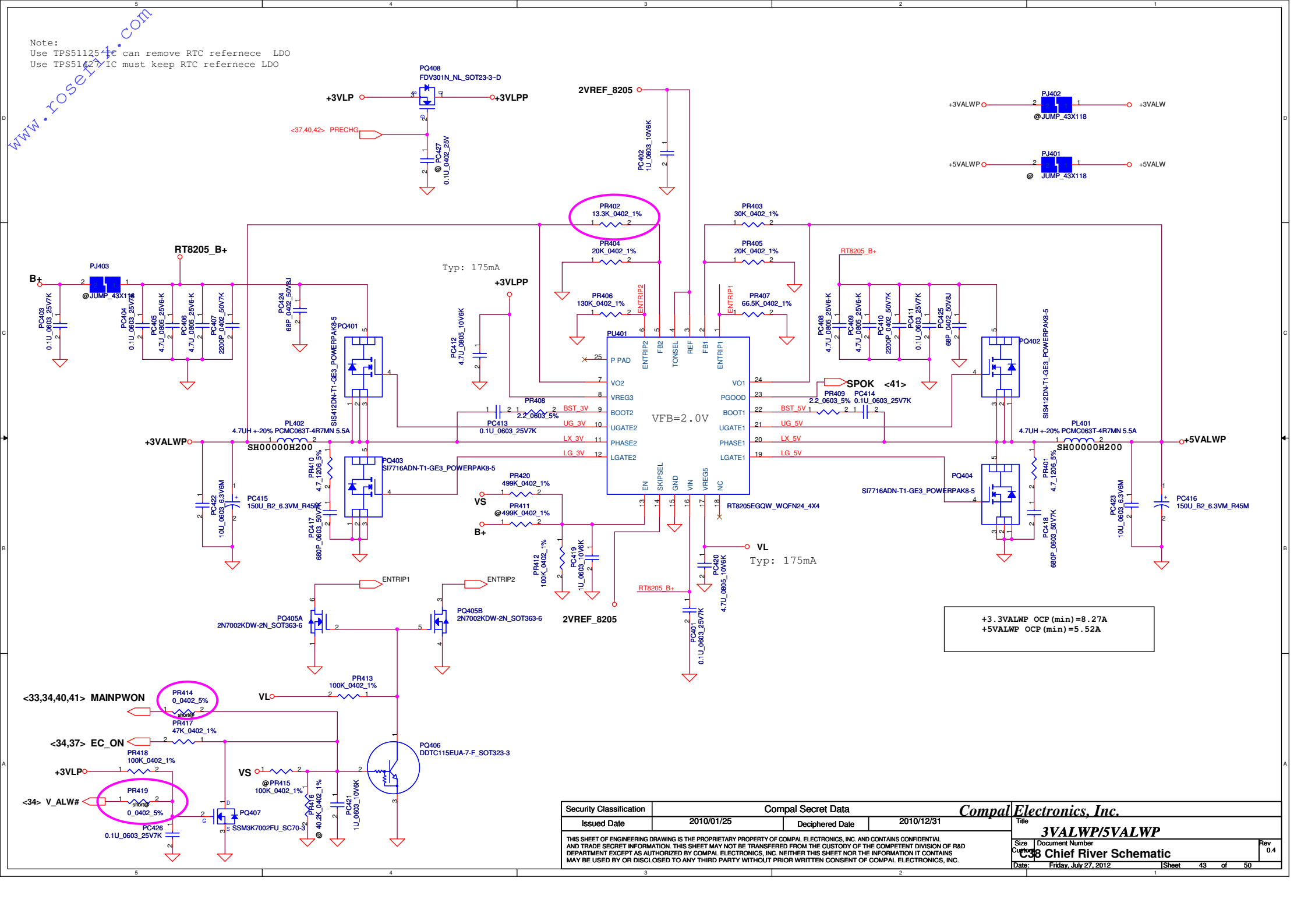
Note:
Use TPS51125 IC can remove RTC refernece LDO
Use TPS51427 IC must keep RTC refernece LDO
www.rosetz.com
PQ408
FDV301N_NL_SOT23-3-D
+3VLP
+3VLPP
<37,40,42> PRECHG
PC427
@ 0.1U_0402_25V
2VREF_8205
PC402
1U_0603_10V6K
PJ402
@JUMP_43X118
+3VALWP
+3VALW
PJ401
@JUMP_43X118
+5VALWP
+5VALW
PR402
13.3K_0402_1%
PR403
30K_0402_1%
PR404
20K_0402_1%
PR405
20K_0402_1%
RT8205_B+
Typ: 175mA
PJ403
@JUMP_43X118
B+
PC403
0.1U_0603_25V7K
PC404
0.1U_0603_25V7K
PC405
4.7U_0805_25V6-K
PC406
4.7U_0805_25V6-K
PC407
220P_0402_50V7K
PC424
68P_0402_50V8J
PQ401
SIS412DN-T1-GE3_POWERPAK8-5
PC412
4.7U_0805_10V6K
+3VLPP
PR406
130K_0402_1%
ENTRIP2
PR407
66.5K_0402_1%
ENTRIP1
PU401
P PAD
VO2
VREG3
BOOT2
UGATE2
PHASE2
LGATE2
FB2
TONSEL
REF
FB1
VO1
PGOOD
BOOT1
UGATE1
PHASE1
LGATE1
EN
SKIPSEL
GND
VIN
VREG5
NC
VFB=2.0V
RT8205EGQW_WQFN24_4X4
PR408
2.2_0603_5%
PC413
0.1U_0603_25V7K
BST_3V
UG_3V
LX_3V
LG_3V
SPOK <41>
PR409
2.2_0603_5%
PC414
0.1U_0603_25V7K
BST_5V
UG_5V
LX_5V
LG_5V
PC408
4.7U_0805_25V6-K
PC409
4.7U_0805_25V6-K
PC410
220P_0402_50V7K
PC411
0.1U_0603_25V7K
PC425
68P_0402_50V8J
PQ402
SIS412DN-T1-GE3_POWERPAK8-5
PL402
4.7UH +-20% PCMC063T-4R7MN 5.5A
SH00000H200
+3VALWP
PR410
4.7_1206_5%
PQ403
SI7716ADN-T1-GE3_POWERPAK8-5
PC422
10U_0603_6.3V6M
PC415
150U_B2_6.3VM_R45M
PC417
680P_0603_50V7K
PR420
499K_0402_1%
VS
PR411
@499K_0402_1%
B+
PR412
100K_0402_1%
PC419
1U_0603_10V6K
2VREF_8205
PL401
4.7UH +-20% PCMC063T-4R7MN 5.5A
SH00000H200
+5VALWP
PQ404
SI7716ADN-T1-GE3_POWERPAK8-5
PR401
4.7_1206_5%
PC418
680P_0603_50V7K
PC423
10U_0603_6.3V6M
PC416
150U_B2_6.3VM_R45M
VL
Typ: 175mA
PC420
4.7U_0805_10V6K
RT8205_B+
PC401
0.1U_0603_25V7K
+3.3VALWP OCP(min)=8.27A
+5VALWP OCP(min)=5.52A
ENTRIP1
ENTRIP2
PQ405A
2N7002KDW-2N_SOT363-6
PQ405B
2N7002KDW-2N_SOT363-6
PR413
100K_0402_1%
<33,34,40,41> MAINPWON
PR414
0_0402_5%
VL
PR417
47K_0402_1%
<34,37> EC_ON
PR418
100K_0402_1%
+3VLP
PR419
0_0402_5%
<34> V_ALW#
PQ407
SSM3K7002FU_SC70-3
PC426
0.1U_0603_25V7K
VS
@PR415
100K_0402_1%
PR416
@ 40.2K_0402_1%
PC421
1U_0603_10V6K
PQ406
DDTC115EUA-7-F_SOT323-3
Security Classification
Compal Secret Data
Issued Date
2010/01/25
Deciphered Date
2010/12/31
THIS SHEET OF ENGINEERING DRAWING IS THE PROPRIETARY PROPERTY OF COMPAL ELECTRONICS, INC. AND CONTAINS CONFIDENTIAL AND TRADE SECRET INFORMATION. THIS SHEET MAY NOT BE TRANSFERED FROM THE CUSTODY OF THE COMPETENT DIVISION OF R&D DEPARTMENT EXCEPT AS AUTHORIZED BY COMPAL ELECTRONICS, INC. NEITHER THIS SHEET NOR THE INFORMATION IT CONTAINS MAY BE USED BY OR DISCLOSED TO ANY THIRD PARTY WITHOUT PRIOR WRITTEN CONSENT OF COMPAL ELECTRONICS, INC.
Compal Electronics, Inc.
Title
3VALWP/5VALWP
Size
Custom
Document Number
C38 Chief River Schematic
Rev
0.4
Date: Friday, July 27, 2012
Sheet 43 of 50

www.rosefix.com

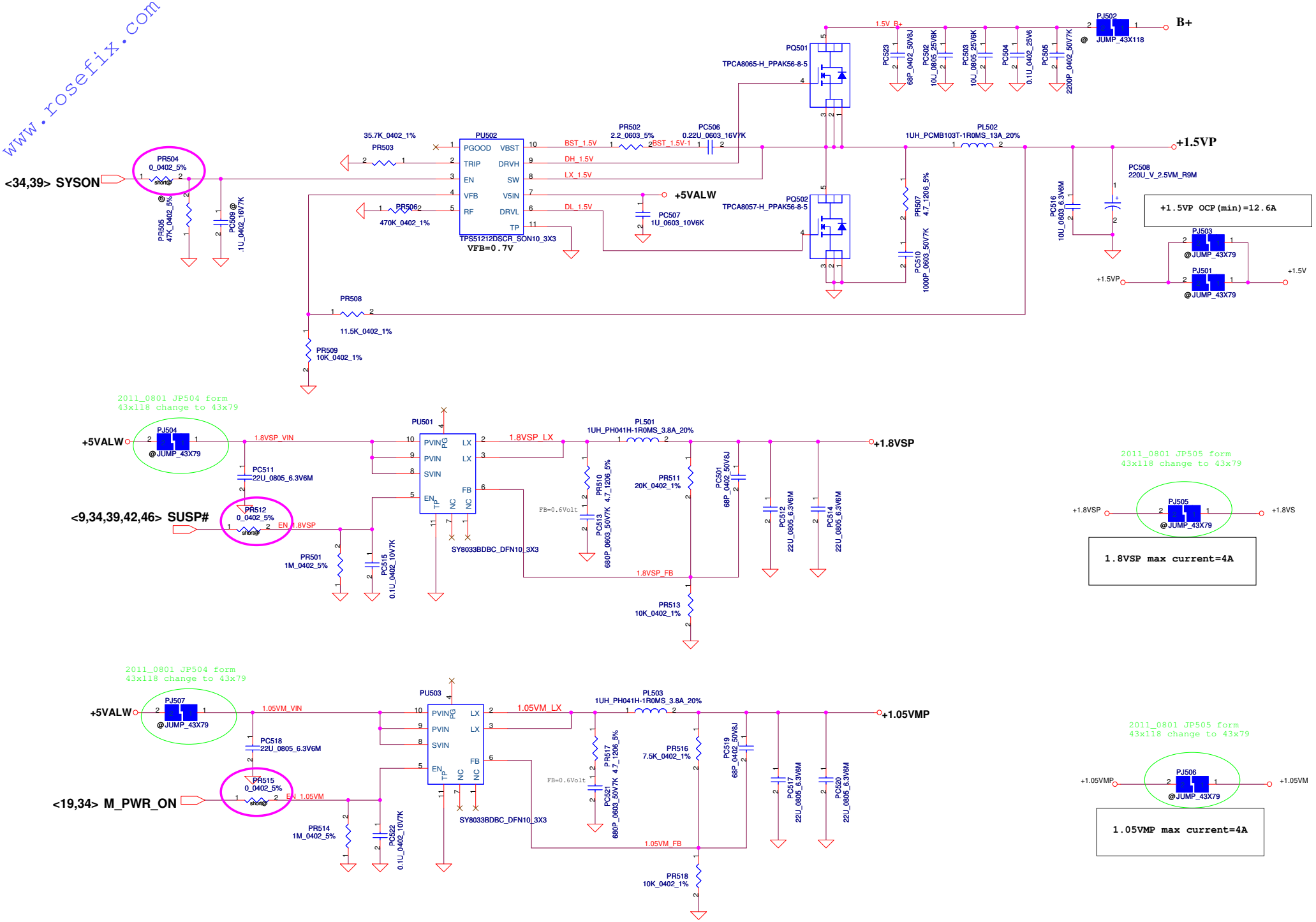

Security Classification	Compal Secret Data		
Issued Date	2010/01/25	Deciphered Date	2010/12/31

THIS SHEET OF ENGINEERING DRAWING IS THE PROPRIETARY PROPERTY OF COMPAL ELECTRONICS, INC. AND CONTAINS CONFIDENTIAL AND TRADE SECRET INFORMATION. THIS SHEET MAY NOT BE TRANSFERED FROM THE CUSTODY OF THE COMPETENT DIVISION OF R&D DEPARTMENT EXCEPT AS AUTHORIZED BY COMPAL ELECTRONICS, INC. NEITHER THIS SHEET NOR THE INFORMATION IT CONTAINS MAY BE USED BY OR DISCLOSED TO ANY THIRD PARTY WITHOUT PRIOR WRITTEN CONSENT OF COMPAL ELECTRONICS, INC.

Compal Electronics, Inc.

Title: ***PWR-+1.5VP/+1.8VSP***

Size	Document Number	Rev
Custom	C38 Chief River Schematic	0.4

Date: Friday, July 27, 2012 | Sheet 44 of 50

www.rosefix.com

VID [0]	VID[1]	VCCSA Vout
0	0	0.9V
0	1	0.85V
1	0	0.775V
1	1	0.75V

output voltage adjustable network

+VCC_SAP
TDC 2.9A
Peak Current 4A
OCP current 5.4A

The 1k PD on the VCCSA VIDs are empty. These should be stuffed to ensure that VCCSA VID is 00 prior to VCCIO stability.

+VCCSAP — PJ601 @ JUMP_43X118 — +VCCSA

+3VS
+5VALW
+3VALW
PJ602 @ JUMP_43X118
PR602 @1K_0402_5%
PR603 100K_0402_5%
PR604 @1K_0402_5%
PR605 10_0402_1%
PR606 0_0402_5% shrink
PR607 0_0603_5%
PR608 4.7_1206_5%
PR609 100K_0402_1%
PR610 5.1K_0402_1%
PR611 0_0402_5% shrink
PR601 100_0402_1%
PC602 1U_0603_10V6K
PC603 2.2U_0603_10V7K
PC604 0.22U_0603_16V7K
PC605 22U_0805_6.3V6M
PC606 22U_0805_6.3V6M
PC607 0.1U_0402_10V7K
PC608 22U_0805_6.3V6M
PC609 22U_0805_6.3V6M
PC610 2200P_0402_50V7K
PC611 22U_0805_6.3V6M
PC612 22U_0805_6.3V6M
PC613 2200P_0402_50V7K
PC614 0.1U_0402_25V7K
PC615 10U_0805_6.3V6M
PC616 1000P_0603_50V7K
PC617 0.22U_0402_10V6K
PC618 3300P_0402_50V7K
PC619 0.01U_0402_25V7K
PC620 68P_0402_50V8J
PC621 @0.033U_0402_16V7
PL601 0.47UH_PCMB063T-R47MS_18A_20%
PU601 TPS51461RGER_QFN24_4X4

PGND PGND PGND VIN VIN VIN
V5DRV V5FLT PGOOD VID1 VID0 EN
BST SW SW SW SW SW TP
GND VREF COMP SLEW VOUT MODE

+VCCSA_EN
+VCCSA_BT
+VCCSA_PHASE
+VCCSA_PWR_SRC
H_VCCSA_VID1 <9>
H_VCCSA_VID0 <9>
<34> SA_PGOOD
1.05VS_VCCP_PWRGOOD <46>
+VCCSA_SENSE <9>

2011_0801 del +V1.05S_VCCPP circuit

Security Classification	Compal Secret Data		
Issued Date	2010/01/25	Deciphered Date	2010/12/31

THIS SHEET OF ENGINEERING DRAWING IS THE PROPRIETARY PROPERTY OF COMPAL ELECTRONICS, INC. AND CONTAINS CONFIDENTIAL AND TRADE SECRET INFORMATION. THIS SHEET MAY NOT BE TRANSFERED FROM THE CUSTODY OF THE COMPETENT DIVISION OF R&D DEPARTMENT EXCEPT AS AUTHORIZED BY COMPAL ELECTRONICS, INC. NEITHER THIS SHEET NOR THE INFORMATION IT CONTAINS MAY BE USED BY OR DISCLOSED TO ANY THIRD PARTY WITHOUT PRIOR WRITTEN CONSENT OF COMPAL ELECTRONICS, INC.

Compal Electronics, Inc.
Title: PWR +VCCSAP
Size: C | Document Number: C38 Chief River Schematic | Rev: 0.4
Date: Friday, July 27, 2012 | Sheet 45 of 50

www.rosefix.com

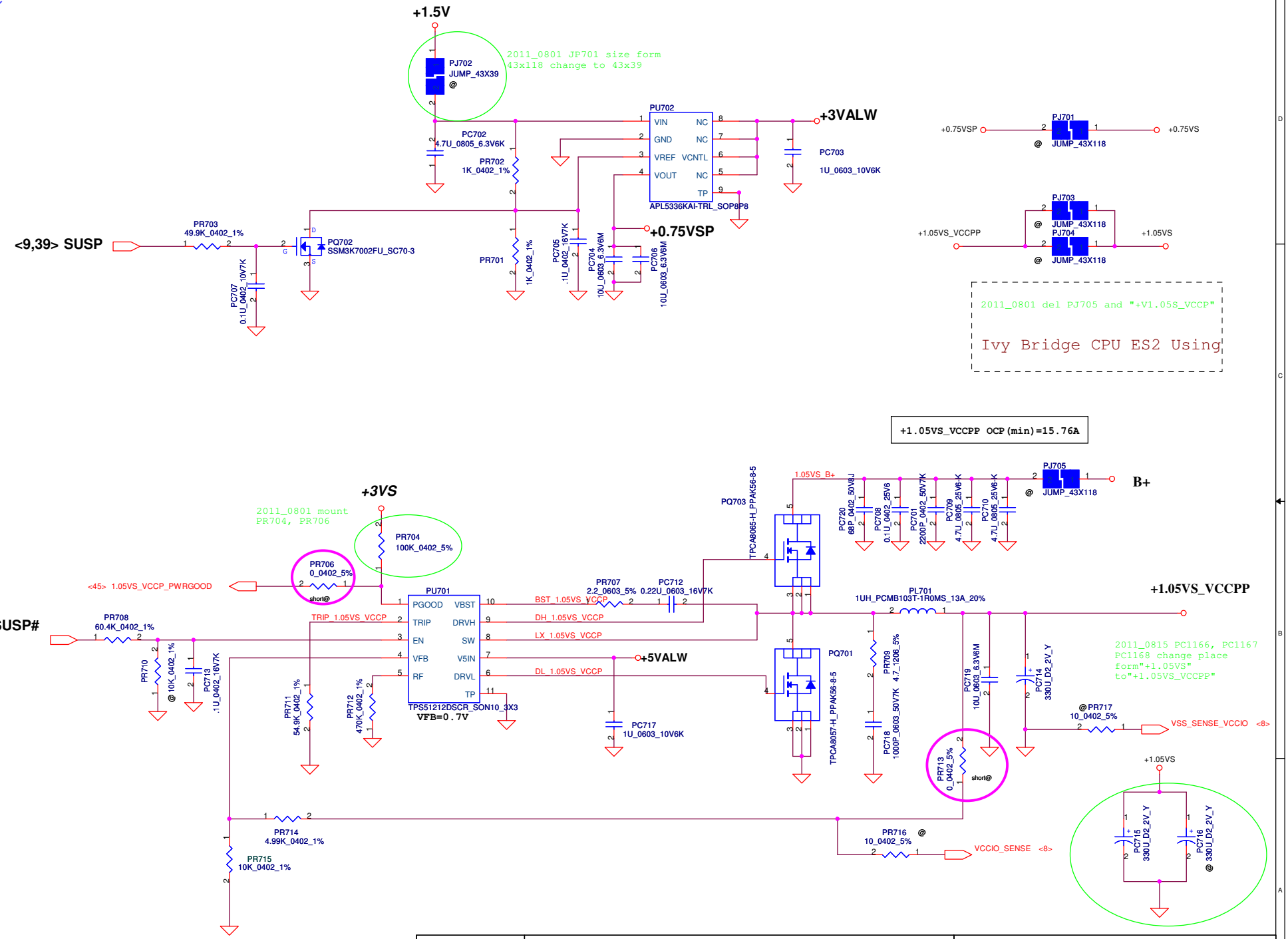

Security Classification	Compal Secret Data		
Issued Date	2010/01/25	Deciphered Date	2010/12/31

THIS SHEET OF ENGINEERING DRAWING IS THE PROPRIETARY PROPERTY OF COMPAL ELECTRONICS, INC. AND CONTAINS CONFIDENTIAL AND TRADE SECRET INFORMATION. THIS SHEET MAY NOT BE TRANSFERED FROM THE CUSTODY OF THE COMPETENT DIVISION OF R&D DEPARTMENT EXCEPT AS AUTHORIZED BY COMPAL ELECTRONICS, INC. NEITHER THIS SHEET NOR THE INFORMATION IT CONTAINS MAY BE USED BY OR DISCLOSED TO ANY THIRD PARTY WITHOUT PRIOR WRITTEN CONSENT OF COMPAL ELECTRONICS, INC.

Compal Electronics, Inc.

Title: PWR +1.05VS_VCCPP/+0.75VSP

Size	Document Number	Rev
Custom	C38 Chief River Schematic	0.4

Date: Friday, July 27, 2012 Sheet 46 of 50

www.rosefix.com

806 ohm

PUT COLSE TO GT Inductor

PUT COLSE TO V_GT HOT SPOT

PUT COLSE TO VCORE Phase 1 Inductor

PUT COLSE TO VCORE HOT SPOT

Security Classification	Compal Secret Data		
Issued Date	2009/12/01	Deciphered Date	2010/12/31

THIS SHEET OF ENGINEERING DRAWING IS THE PROPRIETARY PROPERTY OF COMPAL ELECTRONICS, INC. AND CONTAINS CONFIDENTIAL AND TRADE SECRET INFORMATION. THIS SHEET MAY NOT BE TRANSFERED FROM THE CUSTODY OF THE COMPETENT DIVISION OF R&D DEPARTMENT EXCEPT AS AUTHORIZED BY COMPAL ELECTRONICS, INC. NEITHER THIS SHEET NOR THE INFORMATION IT CONTAINS MAY BE USED BY OR DISCLOSED TO ANY THIRD PARTY WITHOUT PRIOR WRITTEN CONSENT OF COMPAL ELECTRONICS, INC.

Compal Electronics, Inc.

Title: PWR-CPU_CORE

Size: Custom | Document Number: C38 Chief River Schematic | Rev: 0.4

Date: Friday, July 27, 2012 | Sheet 47 of 50

www.rosefix.com

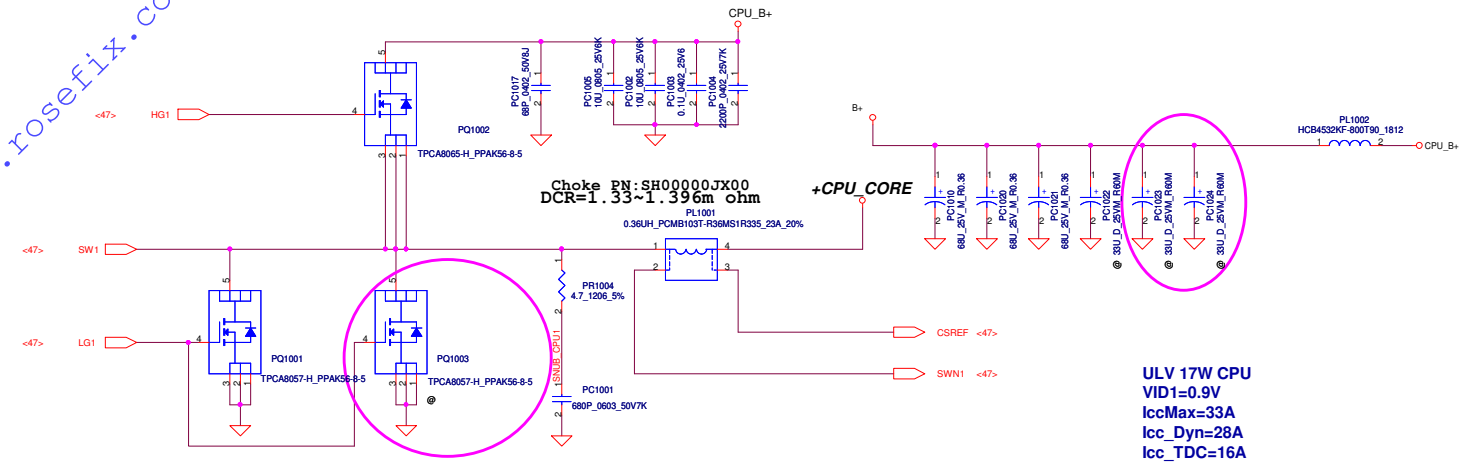

ULV 17W CPU
VID1=0.9V
IccMax=33A
Icc_Dyn=28A
Icc_TDC=16A
R_LL=2.9m ohm

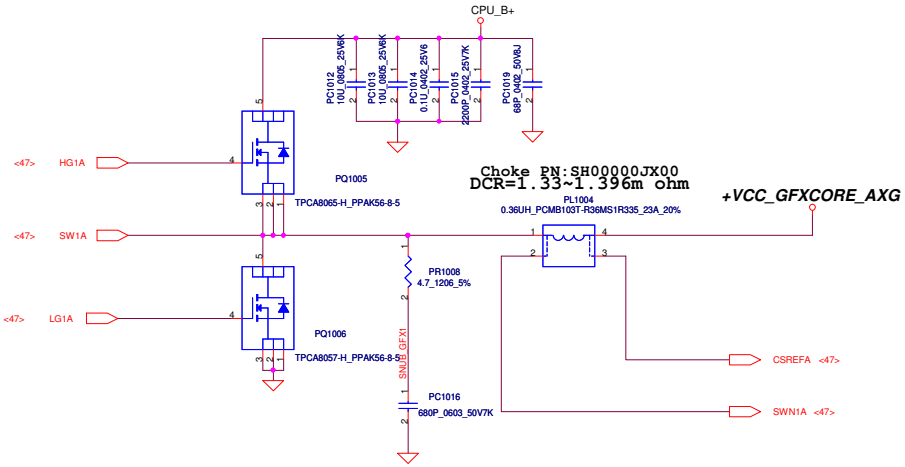

ULV GT2
VID1=1.23V
IccMax=33A
Icc_Dyn=20.2A
Icc_TDC=21.5A
R_LL=3.9m ohm

Security Classification	Compal Secret Data		
Issued Date	2009/12/01	Deciphered Date	2010/12/31

THIS SHEET OF ENGINEERING DRAWING IS THE PROPRIETARY PROPERTY OF COMPAL ELECTRONICS, INC. AND CONTAINS CONFIDENTIAL AND TRADE SECRET INFORMATION. THIS SHEET MAY NOT BE TRANSFERED FROM THE CUSTODY OF THE COMPETENT DIVISION OF R&D DEPARTMENT EXCEPT AS AUTHORIZED BY COMPAL ELECTRONICS, INC. NEITHER THIS SHEET NOR THE INFORMATION IT CONTAINS MAY BE USED BY OR DISCLOSED TO ANY THIRD PARTY WITHOUT PRIOR WRITTEN CONSENT OF COMPAL ELECTRONICS, INC.

Compal Electronics, Inc.

Title: PWR-CPU_CORE

Size	Document Number	Rev
Custom	C38 Chief River Schematic	0.4

Date: Friday, July 27, 2012 | Sheet 48 of 50

www.laserix.com

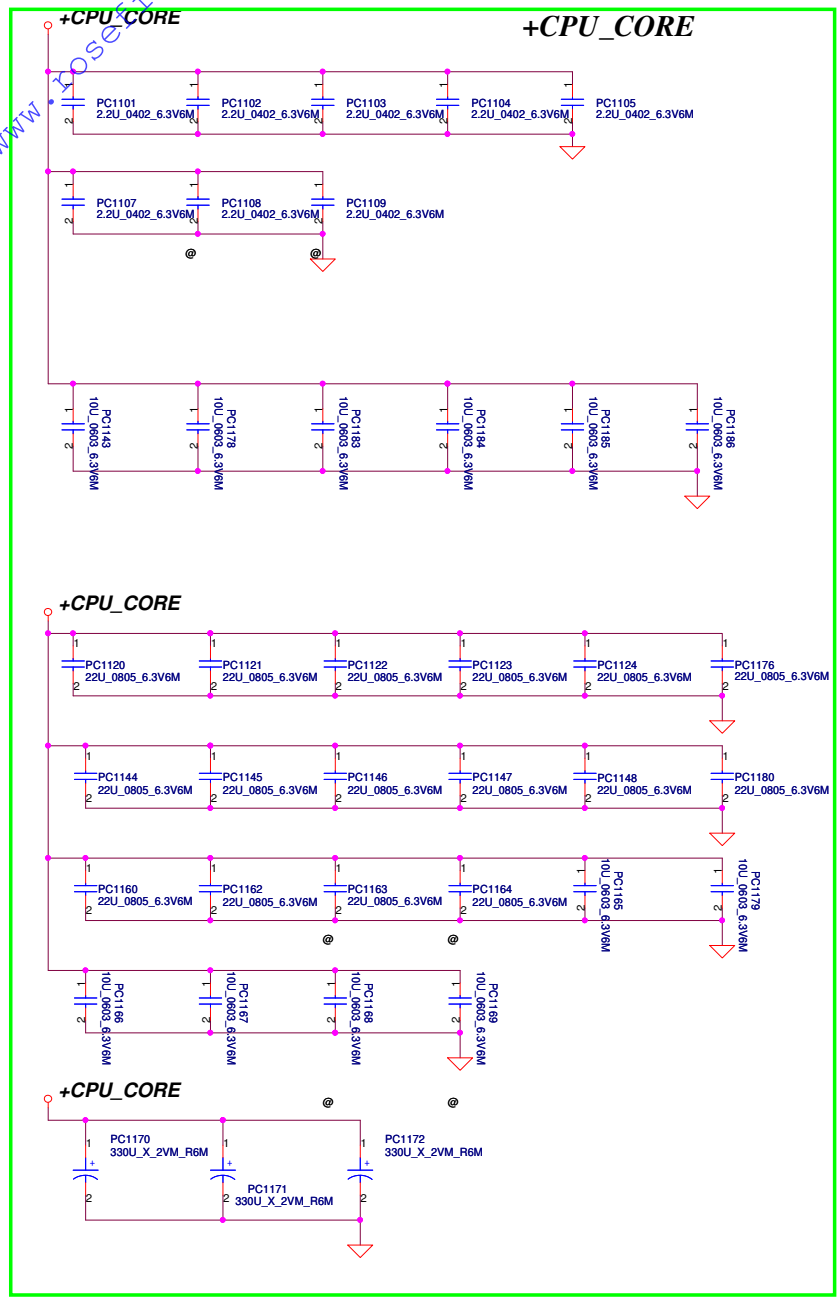

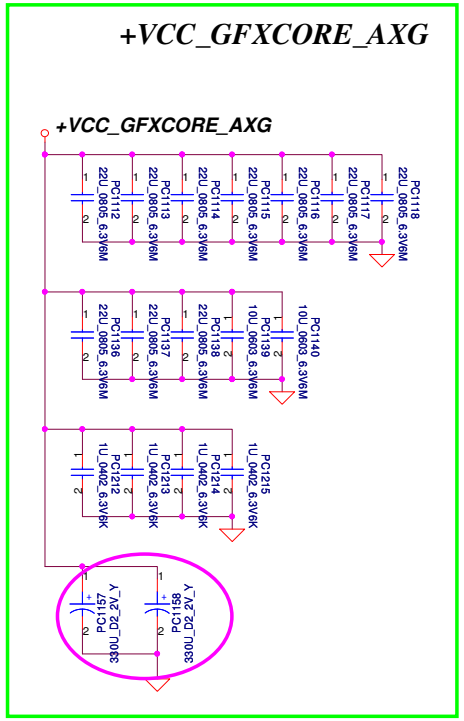

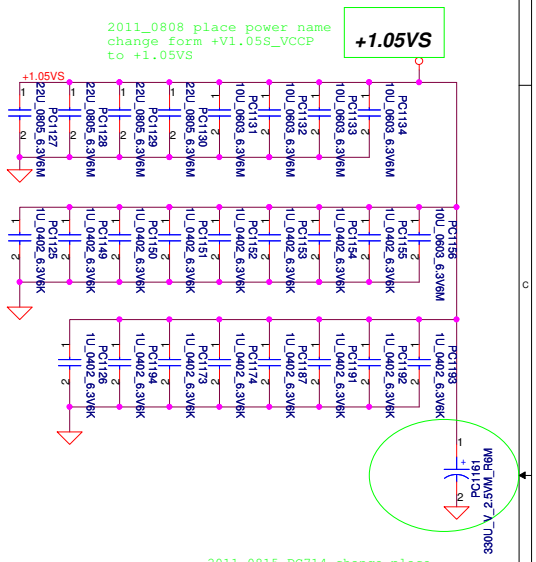

Security Classification	Compal Secret Data		
Issued Date	2008/09/15	Deciphered Date	2009/09/15

THIS SHEET OF ENGINEERING DRAWING IS THE PROPRIETARY PROPERTY OF COMPAL ELECTRONICS, INC. AND CONTAINS CONFIDENTIAL AND TRADE SECRET INFORMATION. THIS SHEET MAY NOT BE TRANSFERED FROM THE CUSTODY OF THE COMPETENT DIVISION OF R&D DEPARTMENT EXCEPT AS AUTHORIZED BY COMPAL ELECTRONICS, INC. NEITHER THIS SHEET NOR THE INFORMATION IT CONTAINS MAY BE USED BY OR DISCLOSED TO ANY THIRD PARTY WITHOUT PRIOR WRITTEN CONSENT OF COMPAL ELECTRONICS, INC.

Compal Electronics, Inc.			
Title: PWR - PROCESSOR DECOUPLING			
Size	Document Number: LA-8261P_SDV		Rev: 0.4
Date: Friday, July 27, 2012	Sheet 49 of 50		

www.koselix.com

Version change list (P.I.R. List)

for PWR

Item	Reason for change	PG#	Modify List	Date	Phase
1	NCP6132A update SPEC	P47	Remove PR916, PR945	2012/06/05	
2	Thermal verfy PH1 setting point	P41	Change PR208 value to 18.2K	2012/06/08	
3	ME demand : Keyboard assembly issue	P44	Change PL401, PL402 to High=2.4mm (SH00000H200)	2012/06/08	
4	Noise is PASS, Don't need 33u CAP	P48	Remove PC1023, PC1024	2012/06/08	
5					
6					
7					
8					
9					
10					
11					
12					
13					
14					
15					
16					
17					

THIS SHEET OF ENGINEERING DRAWING IS THE PROPRIETARY PROPERTY OF COMPAL ELECTRONICS, INC. AND CONTAINS CONFIDENTIAL AND TRADE SECRET INFORMATION. THIS SHEET MAY NOT BE TRANSFERED FROM THE CUSTODY OF THE COMPETENT DIVISION OF R&D DEPARTMENT EXCEPT AS AUTHORIZED BY COMPAL ELECTRONICS, INC. NEITHER THIS SHEET NOR THE INFORMATION IT CONTAINS MAY BE USED BY OR DISCLOSED TO ANY THIRD PARTY WITHOUT PRIOR WRITTEN CONSENT OF COMPAL ELECTRONICS, INC.

Security Classification	Compal Secret Data		
Issued Date	2009/01/06	Deciphered Date	2009/01/06

Compal Electronics, Inc.

Title: PIR (PWR)

Size: Custom | Document Number: C38 Chief River Schematic | Rev: 0.4

Date: Friday, July 27, 2012 | Sheet 50 of 50