VULCAIN Discrete

SI Build

2008.12.26

DATE	CHANGE NO.	REV

	EE	DATE	POWER	DATE
DRAWER				
DESIGN				
CHECK				
RESPONSIBLE				

SIZE = 3 VER :
FILE NAME : XXXX-XXXXXX-XX
P/N XXXXXXXXXXXX

INVENTEC

TITLE ***VV Discrete***

SIZE	CODE	DOC. NUMBER	REV
A3	**CS**	***1310A22294-0-MTR***	*A01*

SHEET **1** OF **54**

TABLE OF CONTENTS

PAGE

5- DC& BATTERY CHARGER
6- SELECT & BATTERY CONN
7- SYSTEM POWER(3V/5V)
8- SYSTEM POWER(+V1.8/+V1.25S)
9- GRAPHIC POWER(+VGFX_CORE)
10- SYSTEM POWER(+VCCP/+V1.5S)
11- CPU POWER(VCC_CORE)
12- DDR TERMINATION VOLTAGE
13- POWER(SLEEP)
14- POWER(SEQUENCE)

PAGE

15- CLOCK_GENERATOR
16- PENRYN-1
17- PENRYN-2
18- PENRYN-3
19- THERMAL&FAN CONTROLLER
20- Crestline-1
21- Crestline-2
22- Crestline-3
23- Crestline-4
24- Crestline-5
25- Crestline-6
26- DDR2-DIMM0
27- DDR2-DIMM1
28- DDR2-DAMPING
29- VGA CONN
30- LCM CONN
31- ICH8-1
32- ICH8-2
33- ICH8-3
34- ICH8-4
35- ICH8-5

PAGE

36- SYSTEM BIOS&ODD Extend/B
37- HDD&ODD CONN
38- USB CONN
39- KBC
40- KB&TP CONN
41- AUDIO CODEC
42- MDC CONN & AUDIO JACK
43- NIC 10/100- CONTROLLER
44- NIC 10/100- RJ45 CONN
45- MINICARD CONN & BLUETOOTH
46- NEW CARD & SD/MMC
47- LED & BUTTON
48- SCREW

49- ATI M92S-1
50- ATI M92S-2
51- ATI M92S-3
52- ATI M92S-4
53- VIDEO RAM-1
54- VIDEO RAM-2

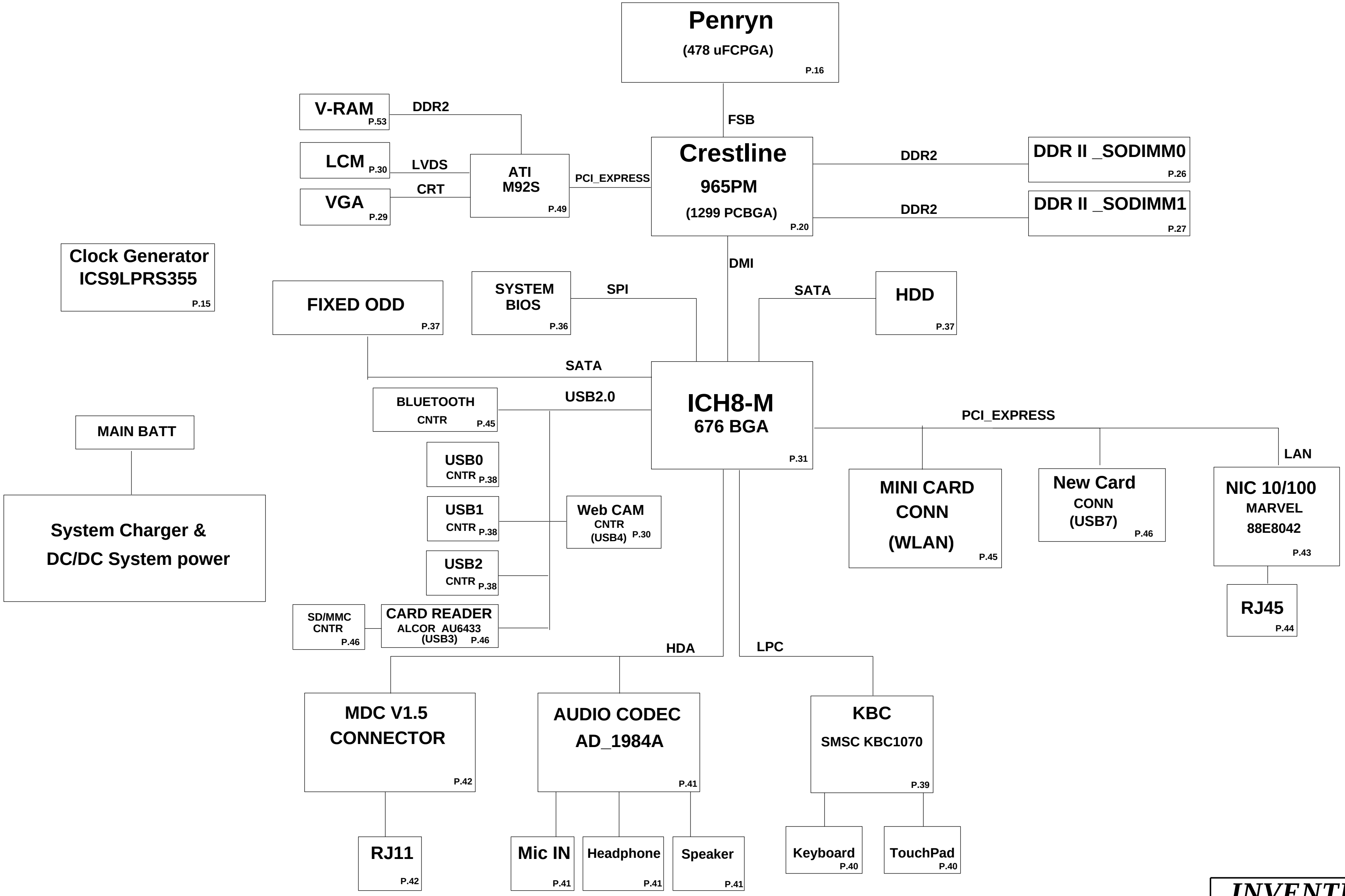
Penryn
(478 uFCPGA)
P.16
FSB
V-RAM
P.53
DDR2
LCM
P.30
LVDS
VGA
P.29
CRT
ATI
M92S
P.49
PCI_EXPRESS
Crestline
965PM
(1299 PCBGA)
P.20
DDR2
DDR II _SODIMM0
P.26
DDR2
DDR II _SODIMM1
P.27
DMI
Clock Generator
ICS9LPRS355
P.15
FIXED ODD
P.37
SYSTEM
BIOS
P.36
SPI
SATA
HDD
P.37
SATA
ICH8-M
676 BGA
P.31
BLUETOOTH
CNTR
P.45
USB2.0
PCI_EXPRESS
MAIN BATT
USB0
CNTR
P.38
LAN
USB1
CNTR
P.38
Web CAM
CNTR
(USB4)
P.30
MINI CARD
CONN
(WLAN)
P.45
New Card
CONN
(USB7)
P.46
NIC 10/100
MARVEL
88E8042
P.43
System Charger &
DC/DC System power
USB2
CNTR
P.38
RJ45
P.44
SD/MMC
CNTR
P.46
CARD READER
ALCOR AU6433
(USB3)
P.46
HDA
LPC
MDC V1.5
CONNECTOR
P.42
AUDIO CODEC
AD_1984A
P.41
KBC
SMSC KBC1070
P.39
RJ11
P.42
Mic IN
P.41
Headphone
P.41
Speaker
P.41
Keyboard
P.40
TouchPad
P.40

INVENTEC			
TITLE *VV Discrete*			
SIZE A3	CODE CS	DOC. NUMBER *1310A22294-0-MTR*	REV *A01*
CHANGE by *Chang, Roger*	*30-Nov-2008*	SHEET 3	OF 54

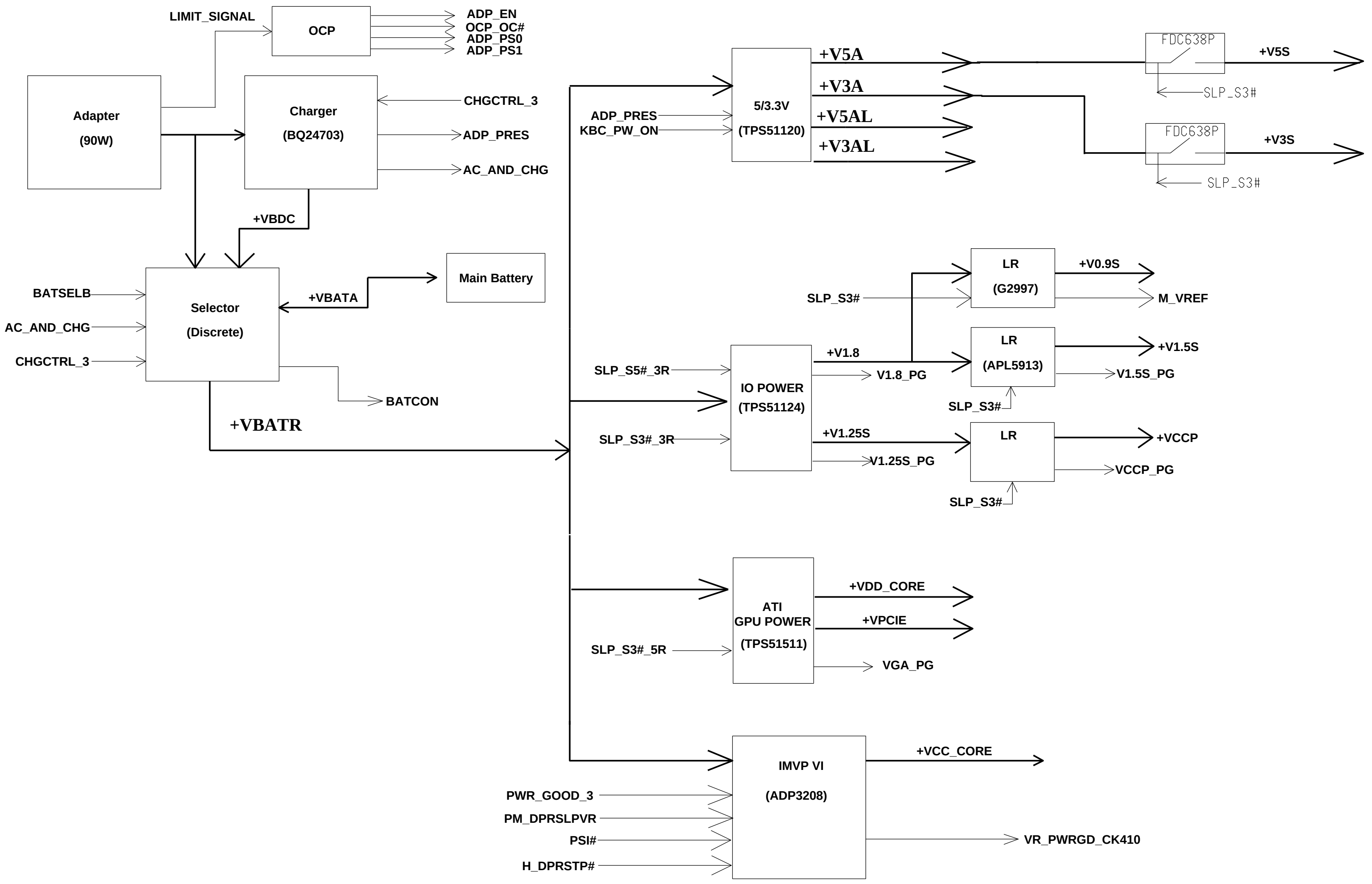
LIMIT_SIGNAL
OCP
ADP_EN
OCP_OC#
ADP_PS0
ADP_PS1
Adapter
(90W)
Charger
(BQ24703)
CHGCTRL_3
ADP_PRES
AC_AND_CHG
+VBDC
BATSELB
AC_AND_CHG
CHGCTRL_3
Selector
(Discrete)
+VBATA
Main Battery
BATCON
+VBATR
ADP_PRES
KBC_PW_ON
5/3.3V
(TPS51120)
+V5A
+V3A
+V5AL
+V3AL
FDC638P
+V5S
SLP_S3#
FDC638P
+V3S
SLP_S3#
SLP_S3#
LR
(G2997)
+V0.9S
M_VREF
SLP_S5#_3R
SLP_S3#_3R
IO POWER
(TPS51124)
+V1.8
V1.8_PG
LR
(APL5913)
+V1.5S
V1.5S_PG
SLP_S3#
+V1.25S
V1.25S_PG
LR
+VCCP
VCCP_PG
SLP_S3#
ATI
GPU POWER
(TPS51511)
SLP_S3#_5R
+VDD_CORE
+VPCIE
VGA_PG
IMVP VI
(ADP3208)
+VCC_CORE
PWR_GOOD_3
PM_DPRSLPVR
PSI#
H_DPRSTP#
VR_PWRGD_CK410

INVENTEC

TITLE	*VV Discrete*		
SIZE A3	CODE CS	DOC. NUMBER *1310A22294-0-MTR*	REV *A01*
CHANGE by *Chang, Roger*	*4-Sep-2008*	SHEET 4	OF 54

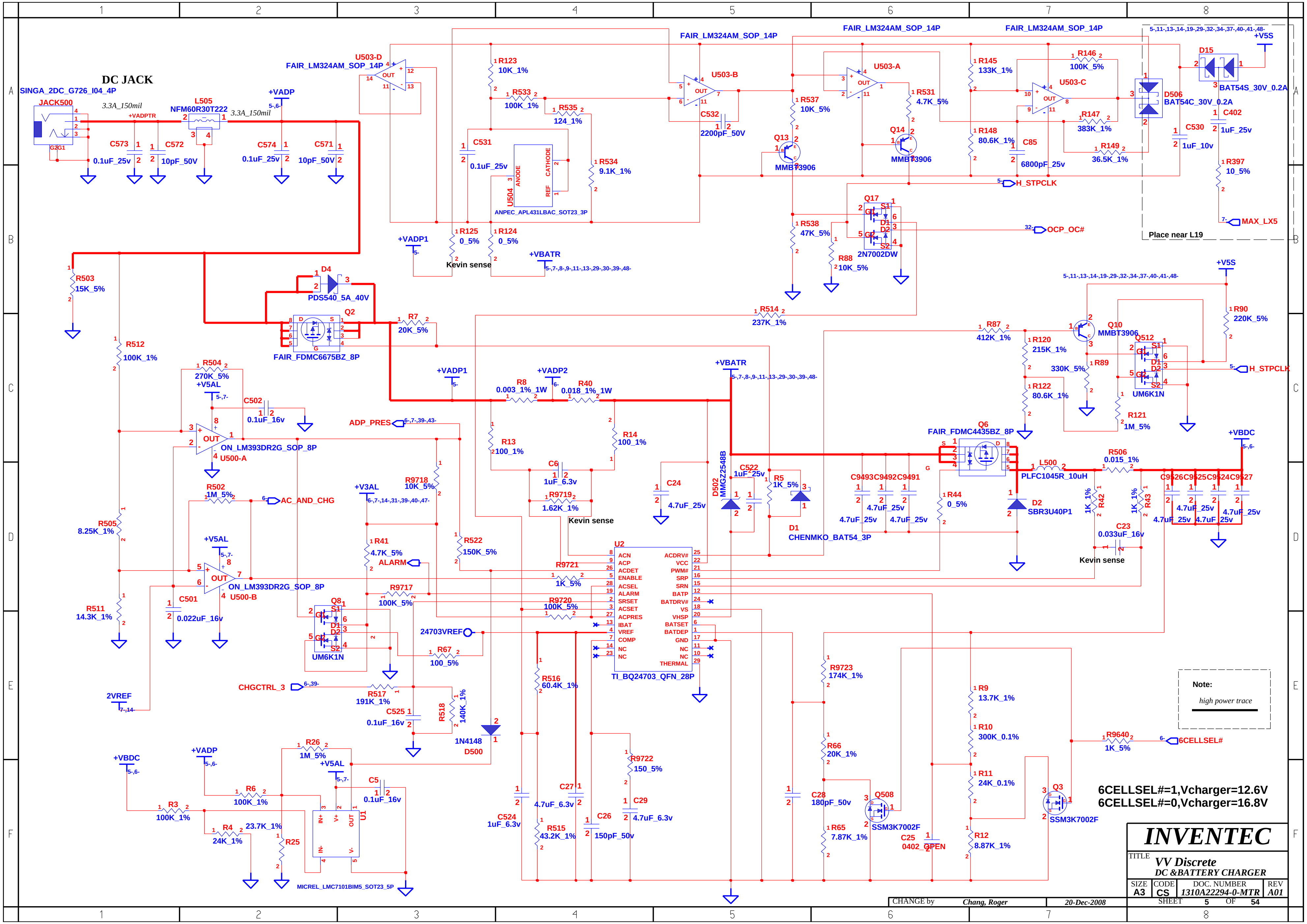
DC JACK
SINGA_2DC_G726_I04_4P
JACK500
3.3A_150mil
+VADPTR
L505
NFM60R30T222
3.3A_150mil
+VADP
C573 0.1uF_25v
C572 10pF_50V
C574 0.1uF_25v
C571 10pF_50V
U503-D
FAIR_LM324AM_SOP_14P
R123 10K_1%
R533 100K_1%
R535 124_1%
C531 0.1uF_25v
U504 ANPEC_APL431LBAC_SOT23_3P
ANODE
CATHODE
REF
R534 9.1K_1%
R125 0_5%
R124 0_5%
Kevin sense
+VADP1
+VBATR
U503-B
FAIR_LM324AM_SOP_14P
C532 2200pF_50V
U503-A
U503-C
R537 10K_5%
Q13 MMBT3906
Q14 MMBT3906
R531 4.7K_5%
R145 133K_1%
R146 100K_5%
R148 80.6K_1%
C85 6800pF_25v
R147 383K_1%
R149 36.5K_1%
D506 BAT54C_30V_0.2A
D15 BAT54S_30V_0.2A
+V5S
C402 1uF_25v
C530 1uF_10v
R397 10_5%
MAX_LX5
Place near L19
H_STPCLK
Q17 2N7002DW
R538 47K_5%
R88 10K_5%
OCP_OC#
R503 15K_5%
D4 PDS540_5A_40V
Q2 FAIR_FDMC6675BZ_8P
R7 20K_5%
R514 237K_1%
R87 412K_1%
Q10 MMBT3906
R90 220K_5%
R120 215K_1%
R89 330K_5%
R122 80.6K_1%
R121 1M_5%
Q512 UM6K1N
R512 100K_1%
R504 270K_5%
+V5AL
C502 0.1uF_16v
U500-A ON_LM393DR2G_SOP_8P
ADP_PRES
+VADP1
+VADP2
R8 0.003_1%_1W
R40 0.018_1%_1W
+VBATR
R13 100_1%
R14 100_1%
C6 1uF_6.3v
R9719 1.62K_1%
Kevin sense
C24 4.7uF_25v
D502 MMGZ2548B
C522 1uF_25v
R5 1K_5%
D1 CHENMKO_BAT54_3P
Q6 FAIR_FDMC4435BZ_8P
L500 PLFC1045R_10uH
R506 0.015_1%
+VBDC
D2 SBR3U40P1
C9493 C9492 C9491 4.7uF_25v
R44 0_5%
R42 1K_1%
R43 1K_1%
C23 0.033uF_16v
C9526 C9525 C9524 C9527 4.7uF_25v
Kevin sense
R502 1M_5%
AC_AND_CHG
R9718 10K_5%
+V3AL
R41 4.7K_5%
ALARM
R522 150K_5%
R505 8.25K_1%
U500-B ON_LM393DR2G_SOP_8P
C501 0.022uF_16v
R511 14.3K_1%
Q8 UM6K1N
R9717 100K_5%
R9721 1K_5%
R9720 100K_5%
24703VREF
R67 100_5%
U2 TI_BQ24703_QFN_28P
ACN ACP ACDET ENABLE ACSEL ALARM SRSET ACSET ACPRES IBAT VREF COMP NC NC
ACDRV# VCC PWM# SRP SRN BATP BATDRV# VS VHSP BATSET BATDEP GND NC NC THERMAL
2VREF
CHGCTRL_3
R517 191K_1%
C525 0.1uF_16v
R518 140K_1%
D500 1N4148
R516 60.4K_1%
R515 43.2K_1%
C524 1uF_6.3v
C27 4.7uF_6.3v
C26 150pF_50v
R9722 150_5%
C29 4.7uF_6.3v
R9723 174K_1%
R66 20K_1%
C28 180pF_50v
R65 7.87K_1%
Q508 SSM3K7002F
C25 0402_OPEN
R9 13.7K_1%
R10 300K_0.1%
R11 24K_0.1%
R12 8.87K_1%
Q3 SSM3K7002F
R9640 1K_5%
6CELLSEL#
+VBDC
+VADP
R3 100K_1%
R6 100K_1%
R4 24K_1%
23.7K_1%
R25
R26 1M_5%
+V5AL
C5 0.1uF_16v
U1 MICREL_LMC7101BIM5_SOT23_5P
IN+ V+ OUT IN- V-

6CELLSEL#=1,Vcharger=12.6V
6CELLSEL#=0,Vcharger=16.8V

Note:
high power trace

INVENTEC

TITLE *VV Discrete*
DC &BATTERY CHARGER

SIZE	CODE	DOC. NUMBER	REV
A3	CS	1310A22294-0-MTR	A01

CHANGE by *Chang, Roger* *20-Dec-2008* SHEET 5 OF 54

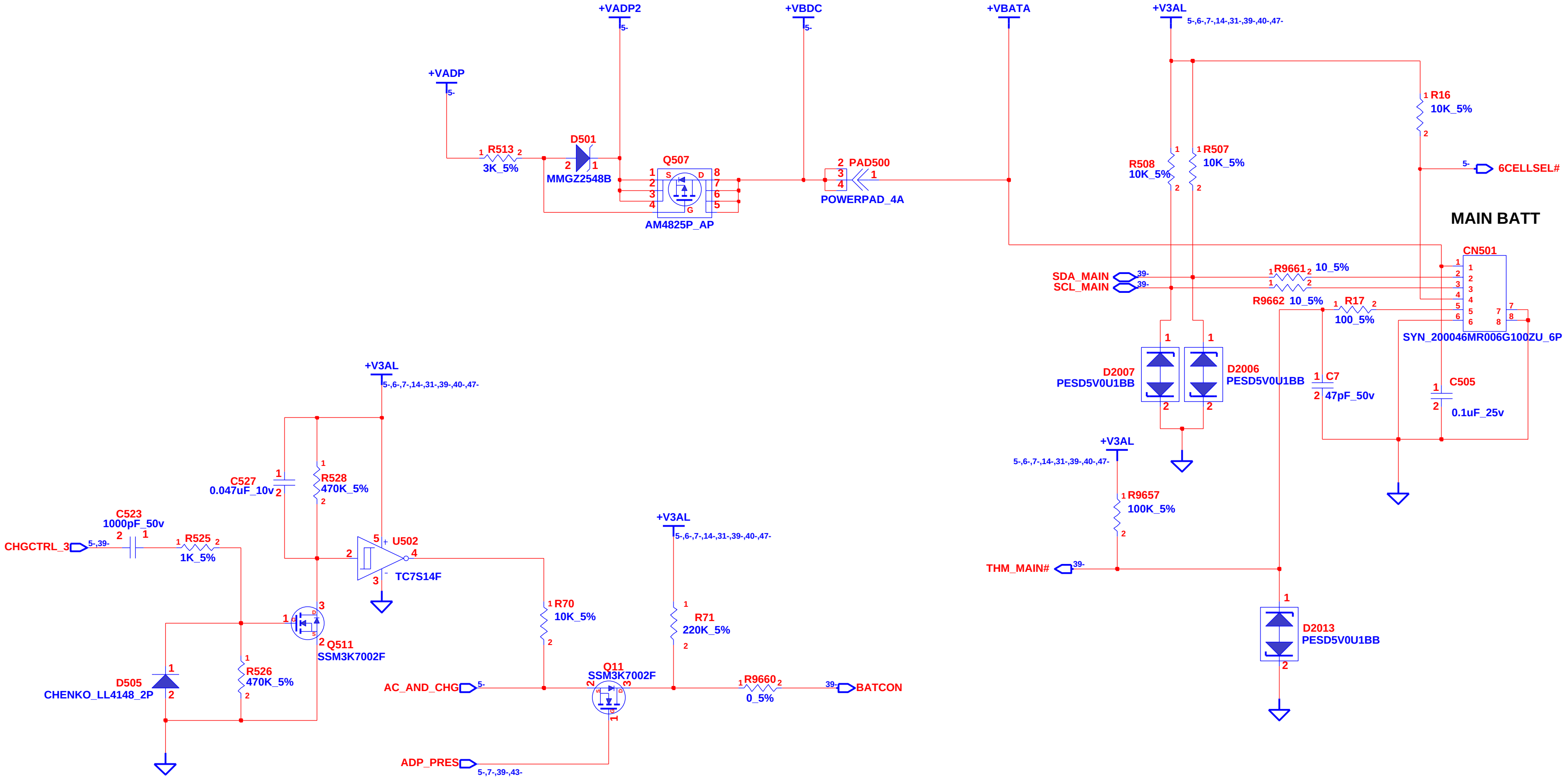

+VADP
5-
R513
3K_5%
D501
MMGZ2548B
+VADP2
5-
Q507
AM4825P_AP
+VBDC
5-
PAD500
POWERPAD_4A
+VBATA
+V3AL
5-,6-,7-,14-,31-,39-,40-,47-
R16
10K_5%
6CELLSEL#
R508
10K_5%
R507
10K_5%
MAIN BATT
CN501
SYN_200046MR006G100ZU_6P
SDA_MAIN
SCL_MAIN
39-
R9661
10_5%
R9662
10_5%
R17
100_5%
D2007
PESD5V0U1BB
D2006
PESD5V0U1BB
C7
47pF_50v
C505
0.1uF_25v
+V3AL
R9657
100K_5%
THM_MAIN#
D2013
PESD5V0U1BB
+V3AL
C527
0.047uF_10v
R528
470K_5%
U502
TC7S14F
C523
1000pF_50v
CHGCTRL_3
5-,39-
R525
1K_5%
Q511
SSM3K7002F
R526
470K_5%
D505
CHENKO_LL4148_2P
R70
10K_5%
+V3AL
R71
220K_5%
AC_AND_CHG
Q11
SSM3K7002F
R9660
0_5%
BATCON
ADP_PRES
5-,7-,39-,43-

INVENTEC

TITLE
VV Discrete
SELECT & BATTERY CONN

SIZE	CODE	DOC. NUMBER	REV
A3	CS	1310A22294-0-MTR	A01

SHEET 6 OF 54

CHANGE by *Chang, Roger* *20-Dec-2008*

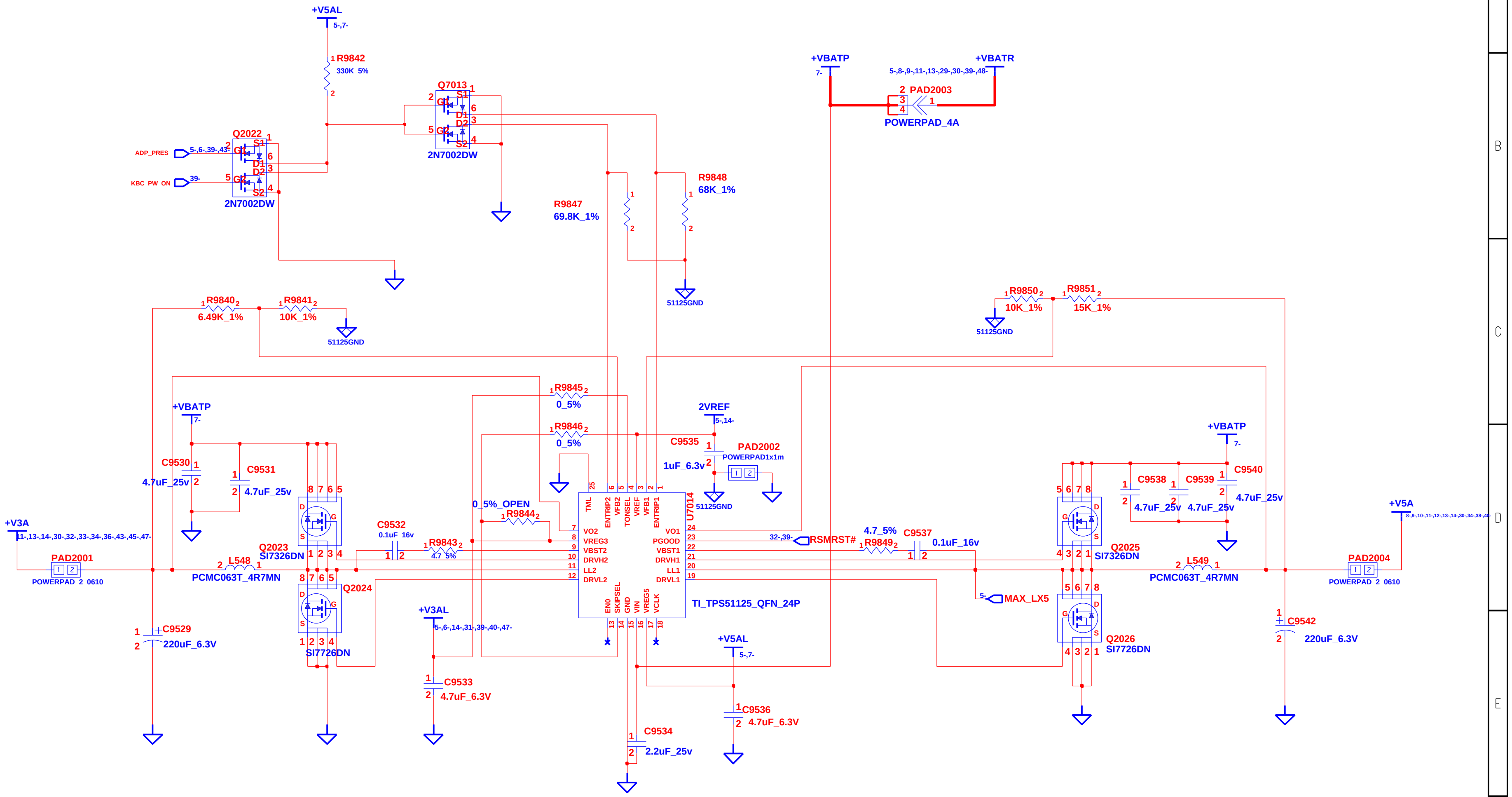
+V5AL
5-,7-
R9842
330K_5%
Q2022
ADP_PRES
5-,6-,39-,43-
KBC_PW_ON
39-
2N7002DW
Q7013
2N7002DW
+VBATP
7-
+VBATR
5-,8-,9-,11-,13-,29-,30-,39-,48-
PAD2003
POWERPAD_4A
R9848
68K_1%
R9847
69.8K_1%
51125GND
R9840
6.49K_1%
R9841
10K_1%
51125GND
R9850
10K_1%
R9851
15K_1%
51125GND
R9845
0_5%
R9846
0_5%
2VREF
5-,14-
C9535
1uF_6.3v
PAD2002
POWERPAD1x1m
51125GND
+VBATP
7-
C9530
4.7uF_25v
C9531
4.7uF_25v
+V3A
11-,13-,14-,30-,32-,33-,34-,36-,43-,45-,47-
PAD2001
POWERPAD_2_0610
L548
PCMC063T_4R7MN
Q2023
SI7326DN
Q2024
SI7726DN
0_5%_OPEN
R9844
C9532
0.1uF_16v
R9843
4.7_5%
C9529
220uF_6.3V
+V3AL
5-,6-,14-,31-,39-,40-,47-
C9533
4.7uF_6.3V
U7014
TML
ENTRIP2
VFB2
TONSEL
VREF
VFB1
ENTRIP1
VO2
VREG3
VBST2
DRVH2
LL2
DRVL2
VO1
PGOOD
VBST1
DRVH1
LL1
DRVL1
EN0
SKIPSEL
GND
VIN
VREG5
VCLK
TI_TPS51125_QFN_24P
32-,39-
RSMRST#
R9849
4.7_5%
C9537
0.1uF_16v
5-
MAX_LX5
+V5AL
5-,7-
C9536
4.7uF_6.3V
C9534
2.2uF_25v
+VBATP
7-
C9538
4.7uF_25v
C9539
4.7uF_25v
C9540
4.7uF_25v
Q2025
SI7326DN
L549
PCMC063T_4R7MN
Q2026
SI7726DN
C9542
220uF_6.3V
+V5A
8-,9-,10-,11-,12-,13-,14-,30-,34-,38-,48-
PAD2004
POWERPAD_2_0610

INVENTEC

TITLE *VV Discrete*
SYSTEM POWER(3V/5V/12V)

SIZE	CODE	DOC. NUMBER	REV
A3	CS	*1310A22294-0-MTR*	*A01*

CHANGE by *Chang, Roger* *4-Sep-2008* SHEET 7 OF 54

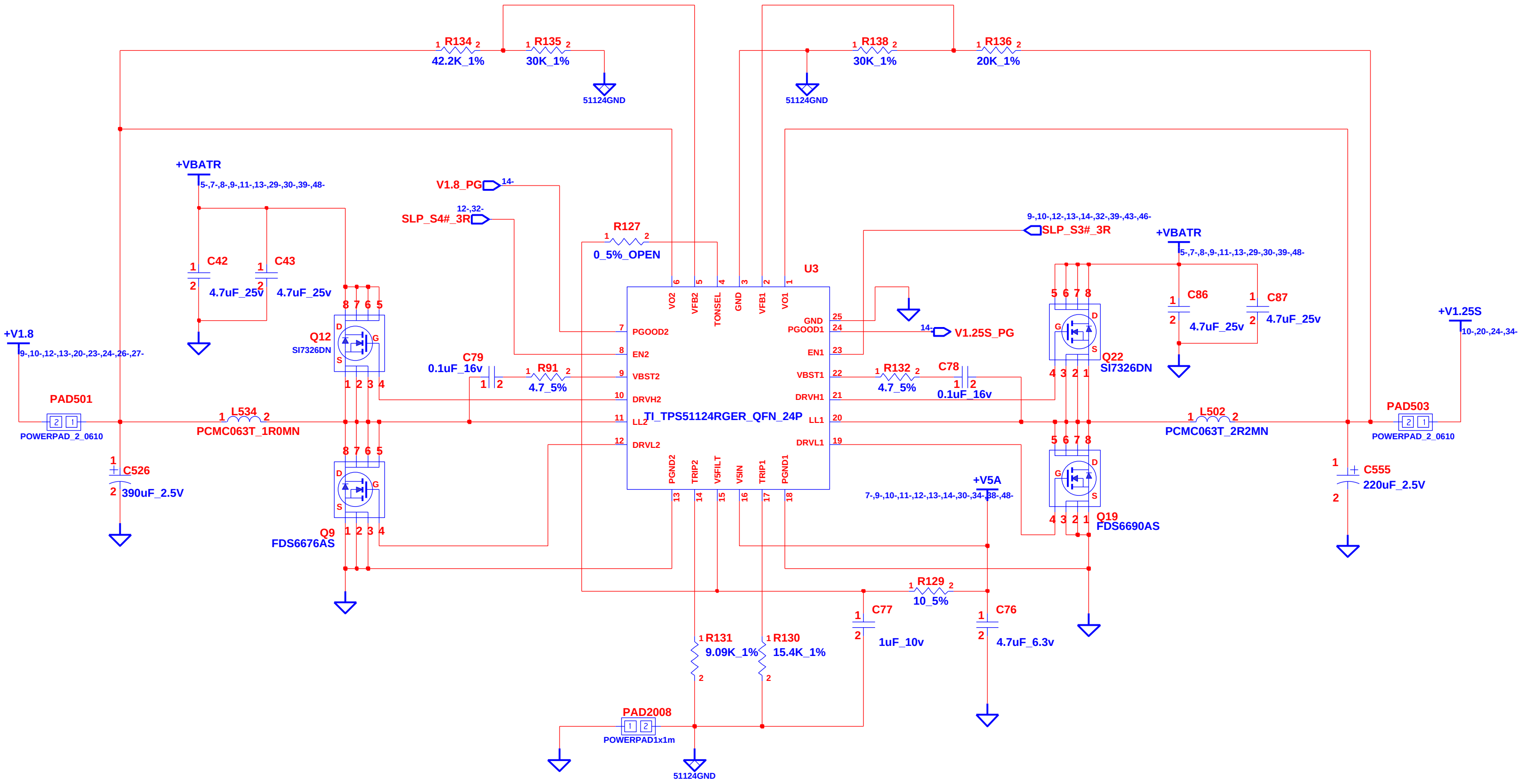
U3
TI_TPS51124RGER_QFN_24P
VO2
VFB2
TONSEL
GND
VFB1
VO1
PGOOD2
EN2
VBST2
DRVH2
LL2
DRVL2
PGND2
TRIP2
V5FILT
V5IN
TRIP1
PGND1
GND
PGOOD1
EN1
VBST1
DRVH1
LL1
DRVL1
R134 42.2K_1%
R135 30K_1%
R138 30K_1%
R136 20K_1%
51124GND
+VBATR
5-,7-,8-,9-,11-,13-,29-,30-,39-,48-
V1.8_PG 14-
SLP_S4#_3R 12-,32-
R127 0_5%_OPEN
C42 4.7uF_25v
C43 4.7uF_25v
Q12 SI7326DN
+V1.8
9-,10-,12-,13-,20-,23-,24-,26-,27-
PAD501 POWERPAD_2_0610
L534 PCMC063T_1R0MN
C79 0.1uF_16v
R91 4.7_5%
C526 390uF_2.5V
Q9 FDS6676AS
SLP_S3#_3R 9-,10-,12-,13-,14-,32-,39-,43-,46-
V1.25S_PG 14-
R132 4.7_5%
C78 0.1uF_16v
Q22 SI7326DN
C86 4.7uF_25v
C87 4.7uF_25v
+V1.25S 10-,20-,24-,34-
L502 PCMC063T_2R2MN
PAD503 POWERPAD_2_0610
C555 220uF_2.5V
+V5A 7-,9-,10-,11-,12-,13-,14-,30-,34-,38-,48-
Q19 FDS6690AS
R129 10_5%
C77 1uF_10v
C76 4.7uF_6.3v
R131 9.09K_1%
R130 15.4K_1%
PAD2008 POWERPAD1x1m
51124GND

INVENTEC

TITLE *VV Discrete*
SYSTEM POWER(+V1.8/+V1.25S)

SIZE	CODE	DOC. NUMBER	REV
A3	CS	1310A22294-0-MTR	A01

CHANGE by *Chang, Roger* *20-Dec-2008* SHEET 8 OF 54

POW_SW1	POW_SW0	+VDD_CORE
0	0	1V
0	1	0.95V
1	0	0.9V

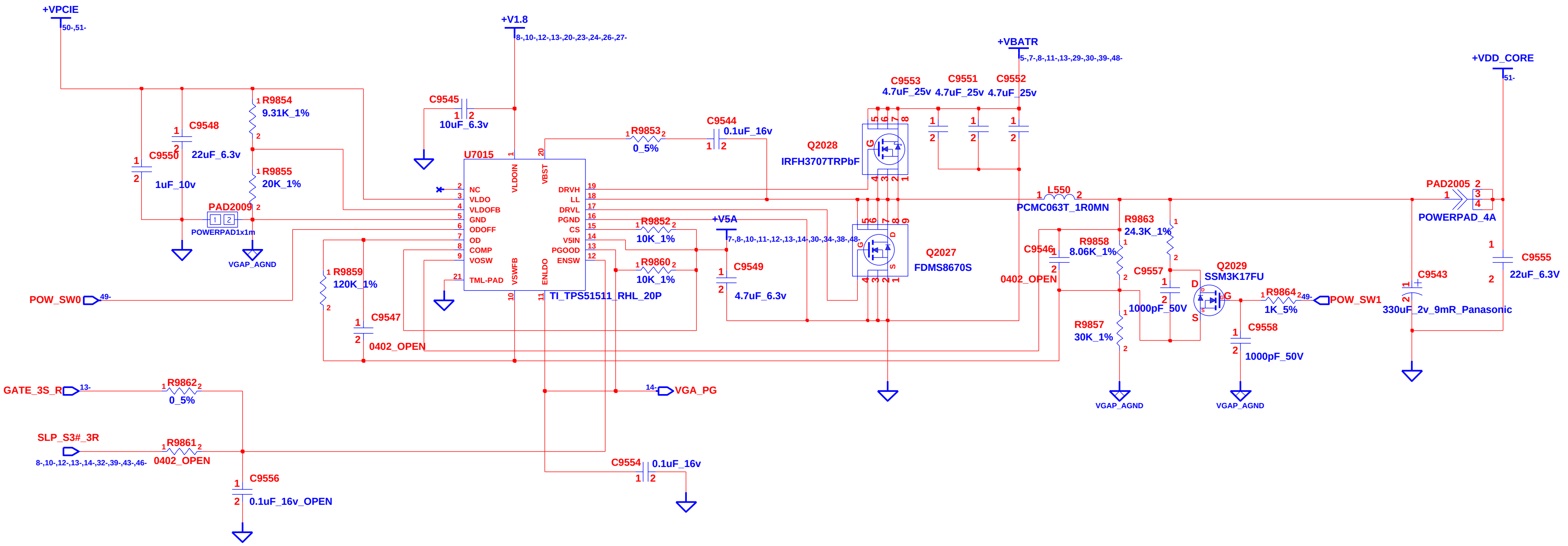
+VPCIE
50-,51-
+V1.8
8-,10-,12-,13-,20-,23-,24-,26-,27-
+VBATR
5-,7-,8-,11-,13-,29-,30-,39-,48-
+VDD_CORE
51-
+V5A
7-,8-,10-,11-,12-,13-,14-,30-,34-,38-,48-
C9548
22uF_6.3v
C9550
1uF_10v
R9854
9.31K_1%
R9855
20K_1%
PAD2009
POWERPAD1x1m
VGAP_AGND
C9545
10uF_6.3v
U7015
NC
VLDO
VLDOFB
GND
ODOFF
OD
COMP
VOSW
TML-PAD
VLDOIN
VBST
VSWFB
ENLDO
DRVH
LL
DRVL
PGND
CS
V5IN
PGOOD
ENSW
TI_TPS51511_RHL_20P
R9853
0_5%
C9544
0.1uF_16v
R9852
10K_1%
R9860
10K_1%
C9549
4.7uF_6.3v
R9859
120K_1%
C9547
0402_OPEN
POW_SW0
49-
Q2028
IRFH3707TRPbF
Q2027
FDMS8670S
C9553
4.7uF_25v
C9551
4.7uF_25v
C9552
4.7uF_25v
L550
PCMC063T_1R0MN
R9863
24.3K_1%
R9858
8.06K_1%
C9546
0402_OPEN
C9557
1000pF_50V
R9857
30K_1%
Q2029
SSM3K17FU
D
G
S
R9864
1K_5%
POW_SW1
49-
C9558
1000pF_50V
PAD2005
POWERPAD_4A
C9543
330uF_2v_9mR_Panasonic
C9555
22uF_6.3V
GATE_3S_R
13-
R9862
0_5%
VGA_PG
14-
SLP_S3#_3R
8-,10-,12-,13-,14-,32-,39-,43-,46-
R9861
0402_OPEN
C9556
0.1uF_16v_OPEN
C9554
0.1uF_16v

INVENTEC

TITLE *VV Discrete*
GRAPHIC POWER (+VGFX_CORE)

SIZE	CODE	DOC. NUMBER	REV
A3	CS	1310A22294-0-MTR	A01

CHANGE by *Chang, Roger* *4-Sep-2008* SHEET 9 OF 54

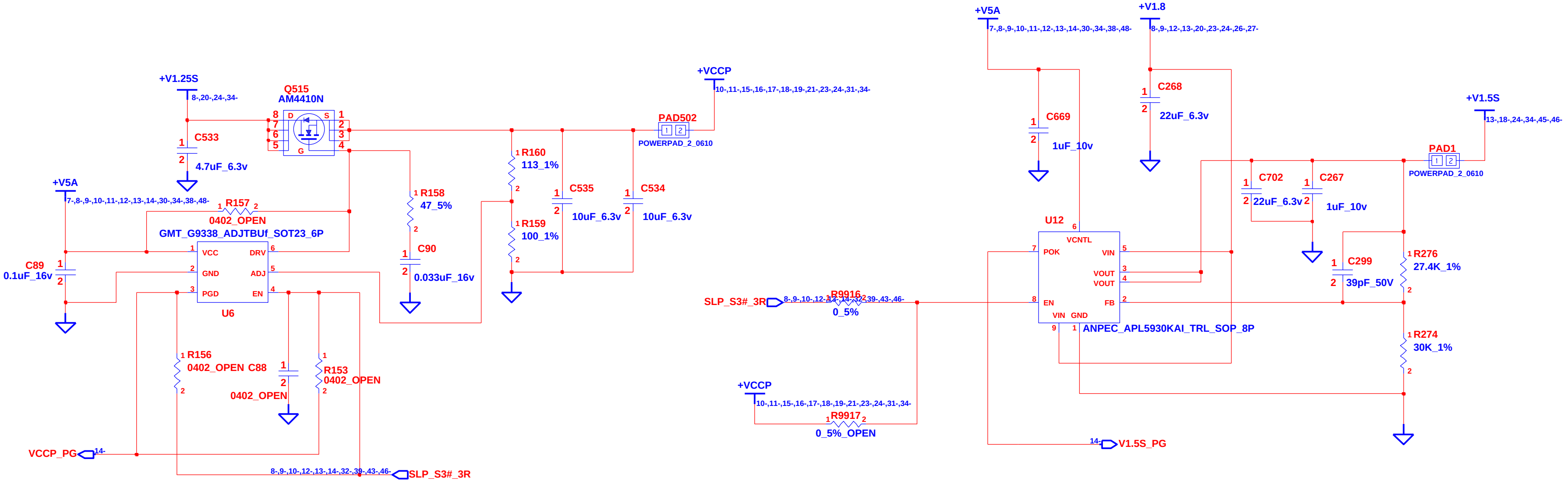
+V1.25S
8-,20-,24-,34-
Q515
AM4410N
D
S
G
8
7
6
5
1
2
3
4
C533
4.7uF_6.3v
+V5A
7-,8-,9-,10-,11-,12-,13-,14-,30-,34-,38-,48-
R157
0402_OPEN
GMT_G9338_ADJTBUf_SOT23_6P
C89
0.1uF_16v
VCC
GND
PGD
DRV
ADJ
EN
U6
R158
47_5%
C90
0.033uF_16v
R160
113_1%
R159
100_1%
C535
10uF_6.3v
C534
10uF_6.3v
+VCCP
10-,11-,15-,16-,17-,18-,19-,21-,23-,24-,31-,34-
PAD502
POWERPAD_2_0610
R156
0402_OPEN
C88
0402_OPEN
R153
0402_OPEN
VCCP_PG
14-
8-,9-,10-,12-,13-,14-,32-,39-,43-,46-
SLP_S3#_3R
+V5A
7-,8-,9-,10-,11-,12-,13-,14-,30-,34-,38-,48-
+V1.8
8-,9-,12-,13-,20-,23-,24-,26-,27-
C669
1uF_10v
C268
22uF_6.3v
+V1.5S
13-,18-,24-,34-,45-,46-
PAD1
POWERPAD_2_0610
C702
22uF_6.3v
C267
1uF_10v
U12
VCNTL
POK
VIN
VOUT
VOUT
EN
FB
VIN
GND
ANPEC_APL5930KAI_TRL_SOP_8P
C299
39pF_50V
R276
27.4K_1%
R274
30K_1%
SLP_S3#_3R
8-,9-,10-,12-,13-,14-,32-,39-,43-,46-
R9916
0_5%
+VCCP
10-,11-,15-,16-,17-,18-,19-,21-,23-,24-,31-,34-
R9917
0_5%_OPEN
14-
V1.5S_PG

	R579	R576	R578	R577
G9338	0 ohm	OPEN	OPEN	0 ohm
SC339	OPEN	0 ohm	0 ohm	OPEN

INVENTEC

TITLE *VV Discrete*
SYSTEM POWER(+VCCP/+V1.5S)

SIZE	CODE	DOC. NUMBER	REV
A3	CS	*1310A22294-0-MTR*	*A01*

CHANGE by *Chang, Roger* *20-Dec-2008* SHEET 10 OF 54

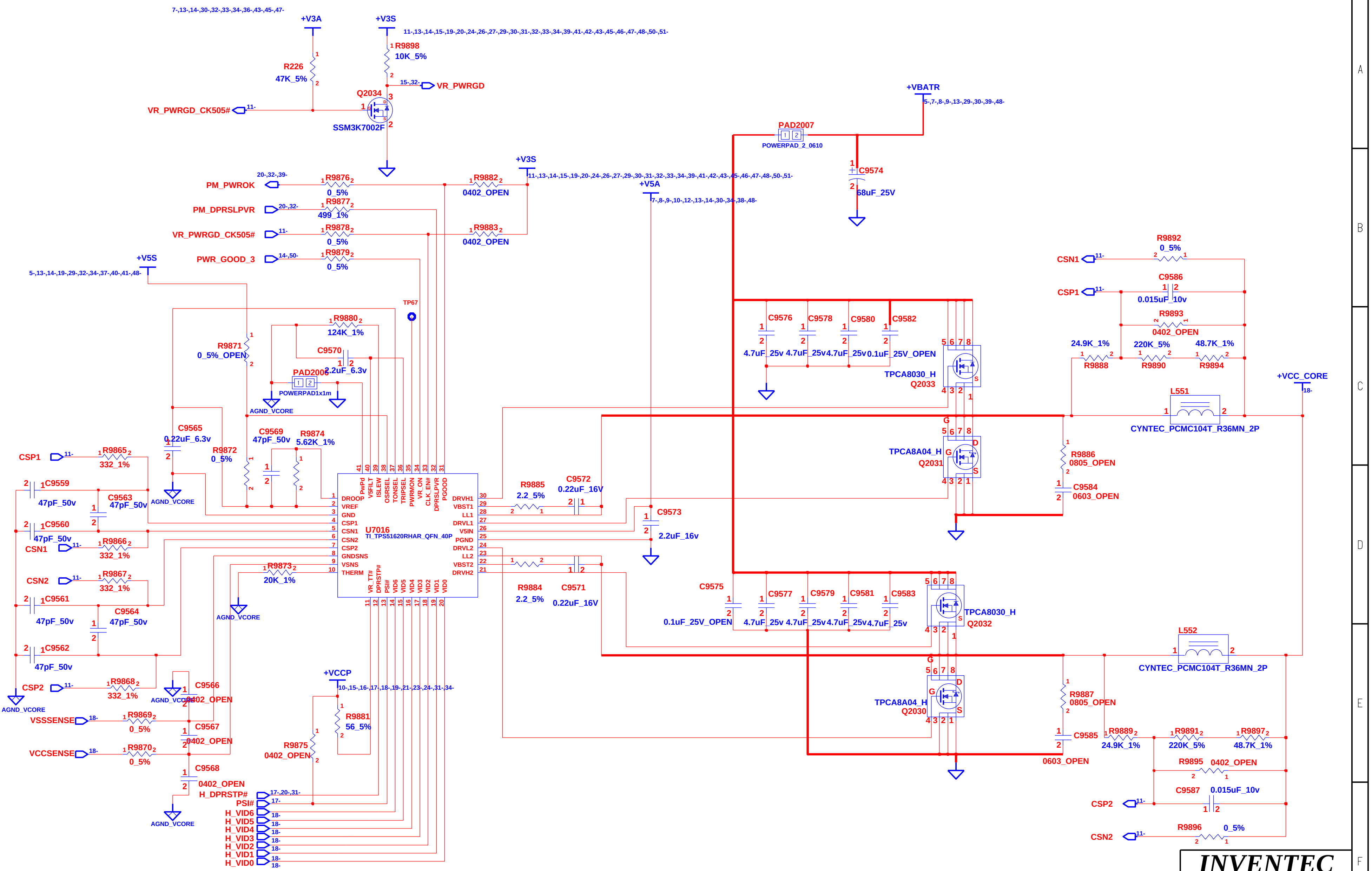
7-,13-,14-,30-,32-,33-,34-,36-,43-,45-,47-
+V3A
+V3S
11-,13-,14-,15-,19-,20-,24-,26-,27-,29-,30-,31-,32-,33-,34-,39-,41-,42-,43-,45-,46-,47-,48-,50-,51-
R9898
10K_5%
R226
47K_5%
15-,32-
VR_PWRGD
Q2034
VR_PWRGD_CK505#
SSM3K7002F
+VBATR
5-,7-,8-,9-,13-,29-,30-,39-,48-
PAD2007
POWERPAD_2_0610
C9574
68uF_25V
+V3S
11-,13-,14-,15-,19-,20-,24-,26-,27-,29-,30-,31-,32-,33-,34-,39-,41-,42-,43-,45-,46-,47-,48-,50-,51-
+V5A
7-,8-,9-,10-,12-,13-,14-,30-,34-,38-,48-
20-,32-,39-
PM_PWROK
R9876
0_5%
R9882
0402_OPEN
PM_DPRSLPVR
20-,32-
R9877
499_1%
VR_PWRGD_CK505#
R9878
0_5%
R9883
0402_OPEN
PWR_GOOD_3
14-,50-
R9879
0_5%
+V5S
5-,13-,14-,19-,29-,32-,34-,37-,40-,41-,48-
TP67
R9880
124K_1%
R9871
0_5%_OPEN
C9570
2.2uF_6.3v
PAD2006
POWERPAD1x1m
AGND_VCORE
C9565
0.22uF_6.3v
C9569
47pF_50v
R9874
5.62K_1%
R9872
0_5%
CSP1
R9865
332_1%
C9559
47pF_50v
C9563
47pF_50v
C9560
47pF_50v
CSN1
R9866
332_1%
CSN2
R9867
332_1%
C9561
47pF_50v
C9564
47pF_50v
C9562
47pF_50v
CSP2
R9868
332_1%
AGND_VCORE
VSSSENSE
R9869
0_5%
VCCSENSE
R9870
0_5%
C9566
0402_OPEN
C9567
0402_OPEN
C9568
0402_OPEN
R9873
20K_1%
U7016
TI_TPS51620RHAR_QFN_40P
DROOP
VREF
GND
CSP1
CSN1
CSN2
CSP2
GNDSNS
VSNS
THERM
PwPd
VSFILT
ISLEW
OSRSEL
TONSEL
TRIPSEL
PWRMON
VR_ON
CLK_EN#
DPRSLPVR
PGOOD
DRVH1
VBST1
LL1
DRVL1
V5IN
PGND
DRVL2
LL2
VBST2
DRVH2
VR_TT#
DPRSTP#
PSI#
VID6
VID5
VID4
VID3
VID2
VID1
VID0
R9885
2.2_5%
C9572
0.22uF_16V
C9573
2.2uF_16v
R9884
2.2_5%
C9571
0.22uF_16V
+VCCP
10-,15-,16-,17-,18-,19-,21-,23-,24-,31-,34-
R9881
56_5%
R9875
0402_OPEN
H_DPRSTP#
17-,20-,31-
PSI#
H_VID6
H_VID5
H_VID4
H_VID3
H_VID2
H_VID1
H_VID0
C9576
C9578
C9580
C9582
4.7uF_25v
4.7uF_25v
4.7uF_25v
0.1uF_25V_OPEN
TPCA8030_H
Q2033
TPCA8A04_H
Q2031
R9886
0805_OPEN
C9584
0603_OPEN
CSN1
R9892
0_5%
CSP1
C9586
0.015uF_10v
R9893
0402_OPEN
24.9K_1%
R9888
220K_5%
R9890
48.7K_1%
R9894
+VCC_CORE
L551
CYNTEC_PCMC104T_R36MN_2P
C9575
0.1uF_25V_OPEN
C9577
C9579
C9581
C9583
4.7uF_25v
TPCA8030_H
Q2032
TPCA8A04_H
Q2030
L552
CYNTEC_PCMC104T_R36MN_2P
R9887
0805_OPEN
C9585
0603_OPEN
R9889
24.9K_1%
R9891
220K_5%
R9897
48.7K_1%
R9895
0402_OPEN
CSP2
C9587
0.015uF_10v
CSN2
R9896
0_5%

INVENTEC

TITLE *VV Discrete*
CPU POWER(VCC_CORE)

SIZE	CODE	DOC. NUMBER	REV
A3	CS	1310A22294-0-MTR	A01

CHANGE by *Chang, Roger* *20-Oct-2008* SHEET 11 OF 54

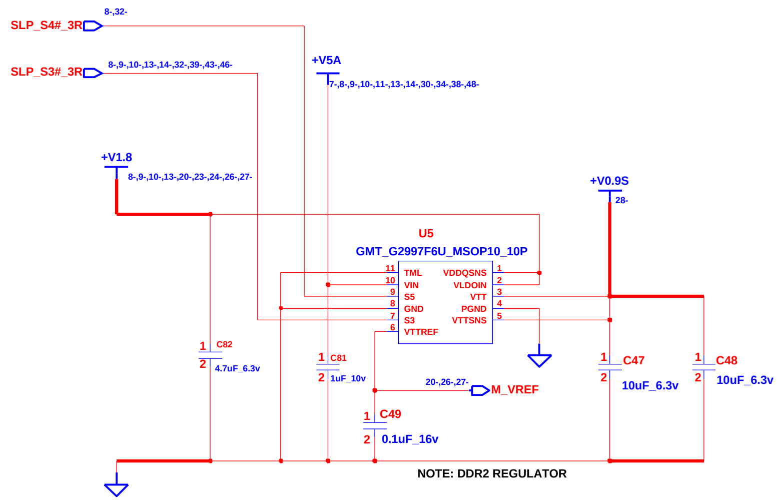
SLP_S4#_3R
8-,32-
SLP_S3#_3R
8-,9-,10-,13-,14-,32-,39-,43-,46-
+V5A
7-,8-,9-,10-,11-,13-,14-,30-,34-,38-,48-
+V1.8
8-,9-,10-,13-,20-,23-,24-,26-,27-
+V0.9S
28-
U5
GMT_G2997F6U_MSOP10_10P
11 TML
10 VIN
9 S5
8 GND
7 S3
6 VTTREF
1 VDDQSNS
2 VLDOIN
3 VTT
4 PGND
5 VTTSNS
1 C82 2 4.7uF_6.3v
1 C81 2 1uF_10v
20-,26-,27-
M_VREF
1 C49 2 0.1uF_16v
1 C47 2 10uF_6.3v
1 C48 2 10uF_6.3v

NOTE: DDR2 REGULATOR

INVENTEC

TITLE *VV Discrete*
DDR TERMINATION VOLTAGE

SIZE	CODE	DOC. NUMBER	REV
A3	CS	*1310A22294-0-MTR*	*A01*

CHANGE by *Chang, Roger* *4-Sep-2008*

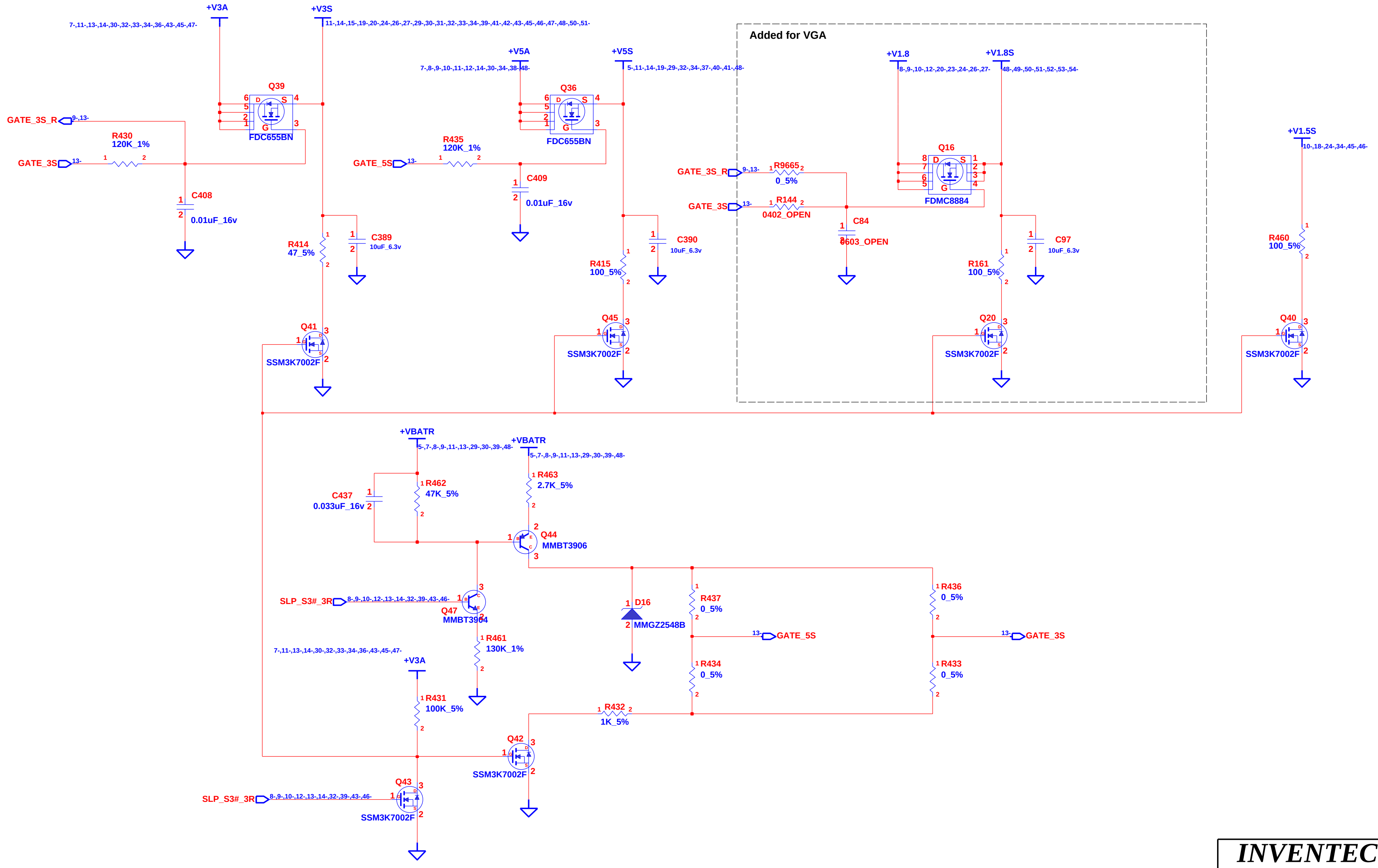
+V3A
7-,11-,13-,14-,30-,32-,33-,34-,36-,43-,45-,47-
+V3S
11-,14-,15-,19-,20-,24-,26-,27-,29-,30-,31-,32-,33-,34-,39-,41-,42-,43-,45-,46-,47-,48-,50-,51-
GATE_3S_R
9-,13-
R430
120K_1%
GATE_3S
13-
Q39
FDC655BN
C408
0.01uF_16v
R414
47_5%
C389
10uF_6.3v
Q41
SSM3K7002F
+V5A
7-,8-,9-,10-,11-,12-,14-,30-,34-,38-48-
+V5S
5-,11-,14-,19-,29-,32-,34-,37-,40-,41-,48-
Q36
FDC655BN
R435
120K_1%
GATE_5S
13-
C409
0.01uF_16v
C390
10uF_6.3v
R415
100_5%
Q45
SSM3K7002F
Added for VGA
+V1.8
8-,9-,10-,12-,20-,23-,24-,26-,27-
+V1.8S
48-,49-,50-,51-,52-,53-,54-
Q16
FDMC8884
GATE_3S_R
9-,13-
R9665
0_5%
GATE_3S
13-
R144
0402_OPEN
C84
0603_OPEN
C97
10uF_6.3v
R161
100_5%
Q20
SSM3K7002F
+V1.5S
10-,18-,24-,34-,45-,46-
R460
100_5%
Q40
SSM3K7002F
+VBATR
5-,7-,8-,9-,11-,13-,29-,30-,39-,48-
+VBATR
5-,7-,8-,9-,11-,13-,29-,30-,39-,48-
C437
0.033uF_16v
R462
47K_5%
R463
2.7K_5%
Q44
MMBT3906
SLP_S3#_3R
8-,9-,10-,12-,13-,14-,32-,39-,43-,46-
Q47
MMBT3904
R461
130K_1%
D16
MMGZ2548B
R437
0_5%
GATE_5S
13-
R436
0_5%
GATE_3S
13-
R434
0_5%
R433
0_5%
7-,11-,13-,14-,30-,32-,33-,34-,36-,43-,45-,47-
+V3A
R431
100K_5%
R432
1K_5%
Q42
SSM3K7002F
SLP_S3#_3R
8-,9-,10-,12-,13-,14-,32-,39-,43-,46-
Q43
SSM3K7002F

INVENTEC

TITLE
VV Discrete
POWER(SLEEP)

SIZE	CODE	DOC. NUMBER	REV
A3	CS	1310A22294-0-MTR	A01

CHANGE by *Chang, Roger* *4-Nov-2008*

SHEET 13 OF 54

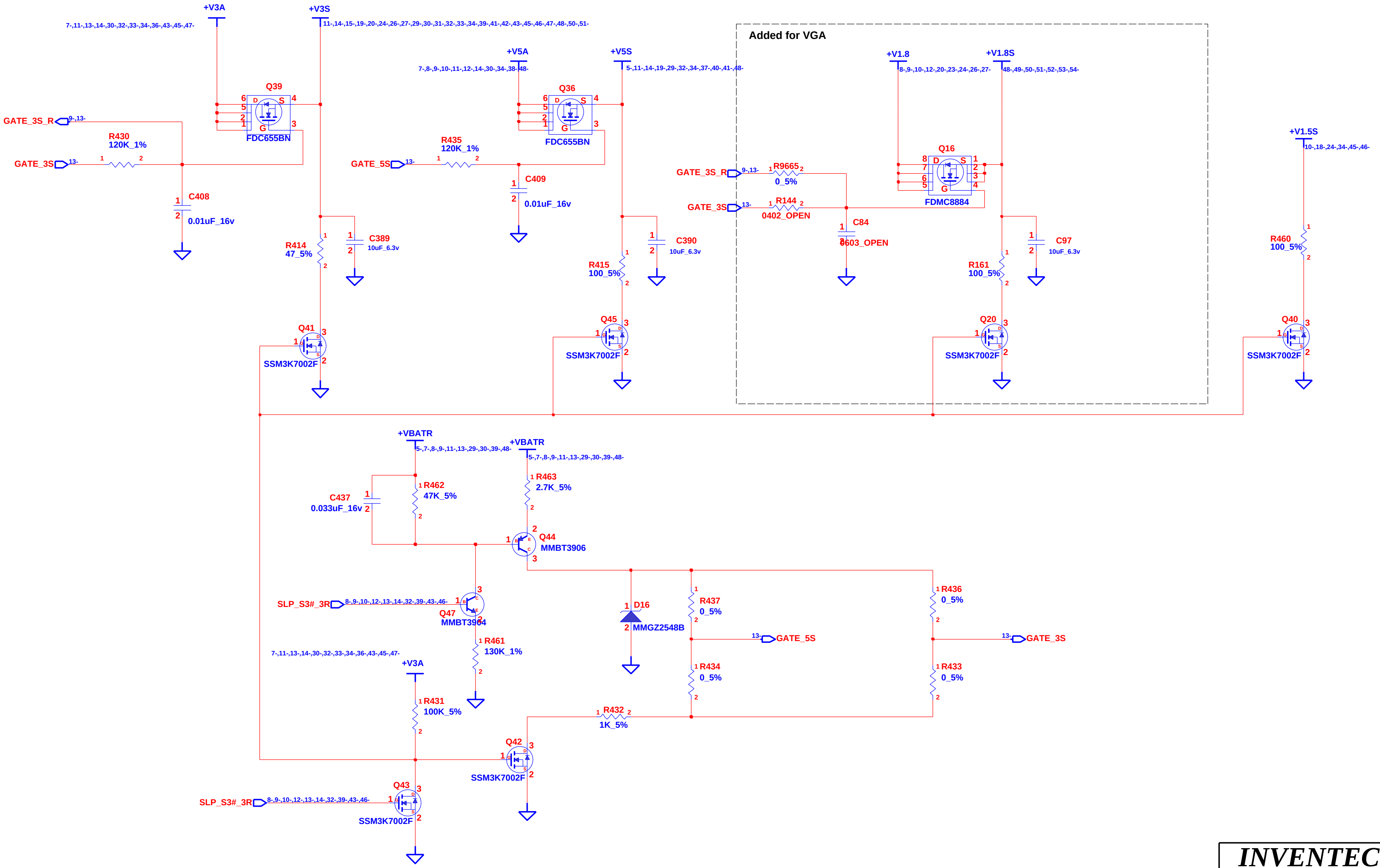
+V3A
7-,11-,13-,14-,30-,32-,33-,34-,36-,43-,45-,47-
+V3S
11-,14-,15-,19-,20-,24-,26-,27-,29-,30-,31-,32-,33-,34-,39-,41-,42-,43-,45-,46-,47-,48-,50-,51-
Q39
FDC655BN
D
S
G
GATE_3S_R
9-,13-
R430
120K_1%
GATE_3S
13-
C408
0.01uF_16v
R414
47_5%
C389
10uF_6.3v
Q41
SSM3K7002F
+V5A
7-,8-,9-,10-,11-,12-,14-,30-,34-,38-,48-
+V5S
5-,11-,14-,19-,29-,32-,34-,37-,40-,41-,48-
Q36
FDC655BN
GATE_5S
13-
R435
120K_1%
C409
0.01uF_16v
R415
100_5%
C390
10uF_6.3v
Q45
SSM3K7002F
Added for VGA
+V1.8
8-,9-,10-,12-,20-,23-,24-,26-,27-
+V1.8S
48-,49-,50-,51-,52-,53-,54-
Q16
FDMC8884
GATE_3S_R
9-,13-
R9665
0_5%
GATE_3S
13-
R144
0402_OPEN
C84
0603_OPEN
R161
100_5%
C97
10uF_6.3v
Q20
SSM3K7002F
+V1.5S
10-,18-,24-,34-,45-,46-
R460
100_5%
Q40
SSM3K7002F
+VBATR
5-,7-,8-,9-,11-,13-,29-,30-,39-,48-
+VBATR
5-,7-,8-,9-,11-,13-,29-,30-,39-,48-
C437
0.033uF_16v
R462
47K_5%
R463
2.7K_5%
Q44
MMBT3906
SLP_S3#_3R
8-,9-,10-,12-,13-,14-,32-,39-,43-,46-
Q47
MMBT3904
R461
130K_1%
D16
MMGZ2548B
R437
0_5%
GATE_5S
13-
R434
0_5%
R436
0_5%
GATE_3S
13-
R433
0_5%
7-,11-,13-,14-,30-,32-,33-,34-,36-,43-,45-,47-
+V3A
R431
100K_5%
R432
1K_5%
Q42
SSM3K7002F
SLP_S3#_3R
8-,9-,10-,12-,13-,14-,32-,39-,43-,46-
Q43
SSM3K7002F

INVENTEC

TITLE *VV Discrete*
POWER(SLEEP)

SIZE	CODE	DOC. NUMBER	REV
A3	CS	1310A22294-0-MTR	A01

CHANGE by *Chang, Roger* *4-Nov-2008* SHEET 13 OF 54

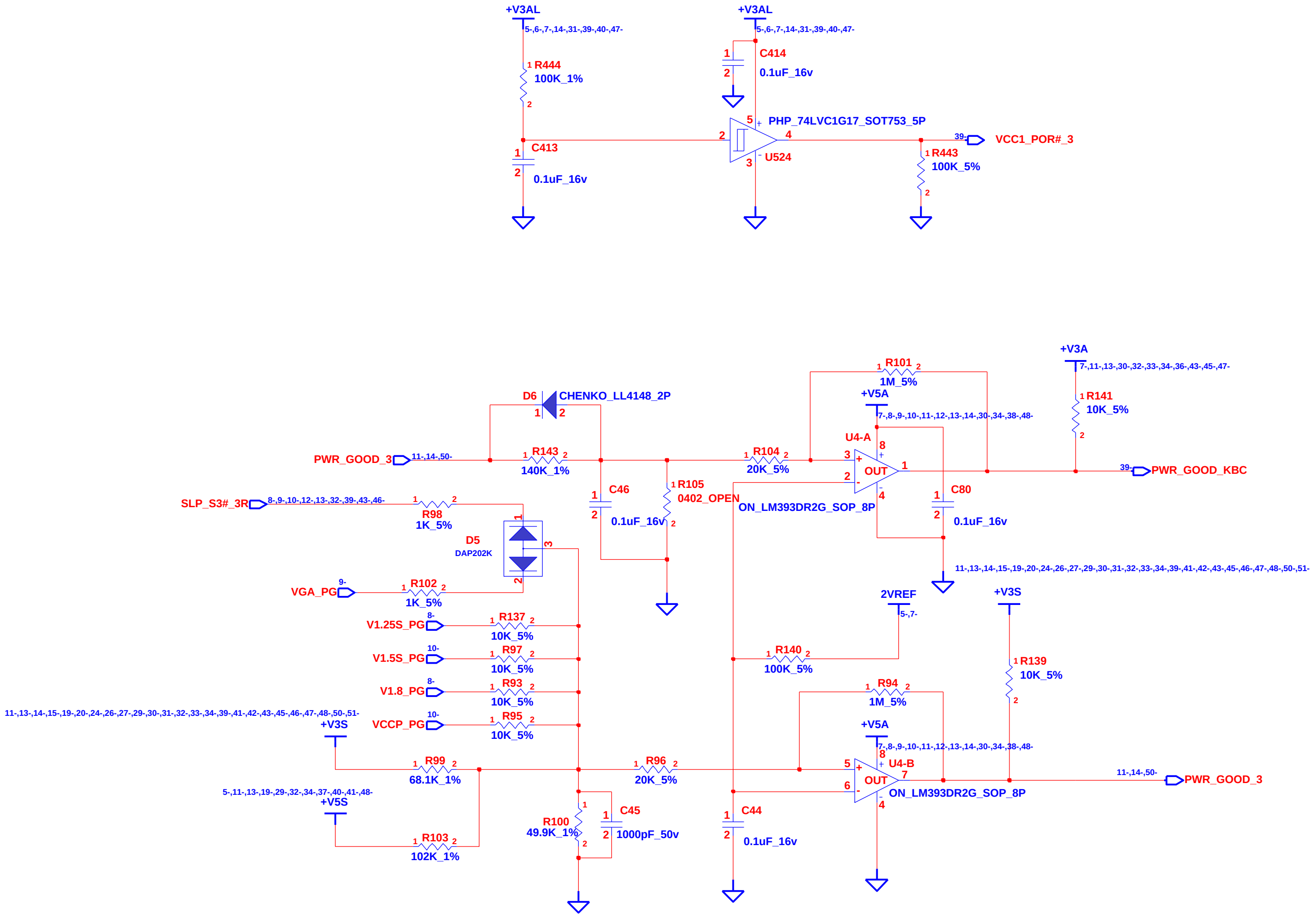
+V3AL
5-,6-,7-,14-,31-,39-,40-,47-
R444
100K_1%
C413
0.1uF_16v
+V3AL
5-,6-,7-,14-,31-,39-,40-,47-
C414
0.1uF_16v
PHP_74LVC1G17_SOT753_5P
U524
39-
VCC1_POR#_3
R443
100K_5%
+V3A
7-,11-,13-,30-,32-,33-,34-,36-,43-,45-,47-
R141
10K_5%
R101
1M_5%
+V5A
7-,8-,9-,10-,11-,12-,13-,14-,30-,34-,38-,48-
U4-A
OUT
39-
PWR_GOOD_KBC
D6
CHENKO_LL4148_2P
PWR_GOOD_3
11-,14-,50-
R143
140K_1%
R104
20K_5%
C46
0.1uF_16v
R105
0402_OPEN
ON_LM393DR2G_SOP_8P
C80
0.1uF_16v
SLP_S3#_3R
8-,9-,10-,12-,13-,32-,39-,43-,46-
R98
1K_5%
D5
DAP202K
11-,13-,14-,15-,19-,20-,24-,26-,27-,29-,30-,31-,32-,33-,34-,39-,41-,42-,43-,45-,46-,47-,48-,50-,51-
VGA_PG
9-
R102
1K_5%
2VREF
5-,7-
+V3S
V1.25S_PG
8-
R137
10K_5%
V1.5S_PG
10-
R97
10K_5%
R140
100K_5%
R139
10K_5%
V1.8_PG
8-
R93
10K_5%
R94
1M_5%
11-,13-,14-,15-,19-,20-,24-,26-,27-,29-,30-,31-,32-,33-,34-,39-,41-,42-,43-,45-,46-,47-,48-,50-,51-
+V3S
VCCP_PG
10-
R95
10K_5%
+V5A
7-,8-,9-,10-,11-,12-,13-,14-,30-,34-,38-,48-
R99
68.1K_1%
R96
20K_5%
U4-B
OUT
11-,14-,50-
PWR_GOOD_3
ON_LM393DR2G_SOP_8P
5-,11-,13-,19-,29-,32-,34-,37-,40-,41-,48-
+V5S
R100
49.9K_1%
C45
1000pF_50v
C44
0.1uF_16v
R103
102K_1%

INVENTEC

TITLE *VV Discrete*
POWER(SEQUENCE)

SIZE	CODE	DOC. NUMBER	REV
A3	CS	*1310A22294-0-MTR*	*A01*

CHANGE by *Chang, Roger* *4-Nov-2008* SHEET 14 OF 54

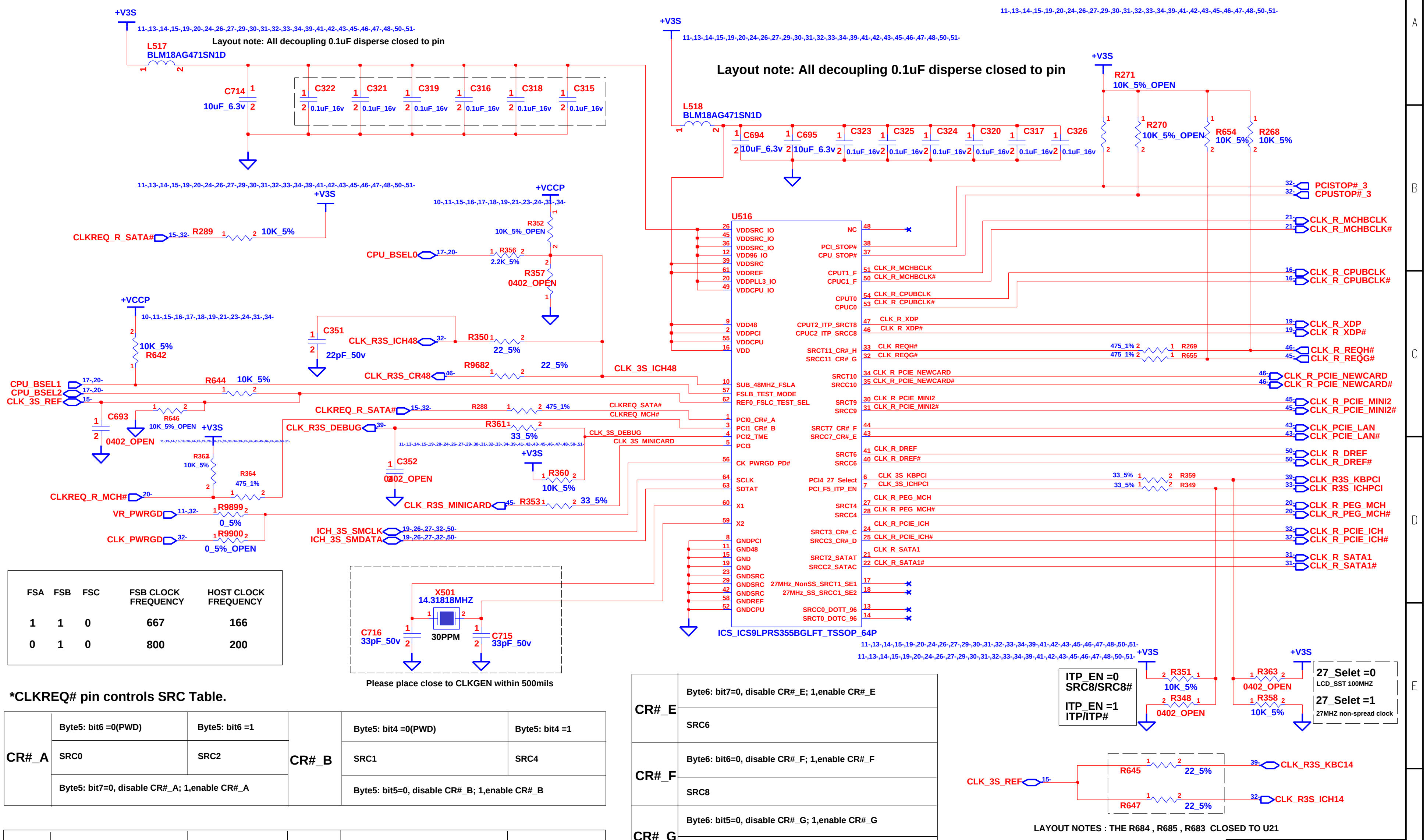
+V3S
L517
BLM18AG471SN1D
Layout note: All decoupling 0.1uF disperse closed to pin
C714
10uF_6.3v
C322
C321
C319
C316
C318
C315
0.1uF_16v
CLKREQ_R_SATA#
R289
10K_5%
+VCCP
R352
10K_5%_OPEN
CPU_BSEL0
R356
2.2K_5%
R357
0402_OPEN
R642
10K_5%
C351
22pF_50v
CLK_R3S_ICH48
R350
22_5%
CLK_R3S_CR48
R9682
22_5%
CLK_3S_ICH48
CPU_BSEL1
CPU_BSEL2
CLK_3S_REF
R644
10K_5%
C693
0402_OPEN
R646
10K_5%_OPEN
R288
475_1%
CLKREQ_SATA#
CLKREQ_MCH#
CLK_R3S_DEBUG
R361
33_5%
CLK_3S_DEBUG
CLK_3S_MINICARD
R363
10K_5%
R364
475_1%
CLKREQ_R_MCH#
VR_PWRGD
R9899
0_5%
CLK_PWRGD
R9900
0_5%_OPEN
C352
0402_OPEN
R360
10K_5%
CLK_R3S_MINICARD
R353
33_5%
ICH_3S_SMCLK
ICH_3S_SMDATA
X501
14.31818MHZ
30PPM
C716
33pF_50v
C715
33pF_50v
L518
BLM18AG471SN1D
C694
10uF_6.3v
C695
10uF_6.3v
C323
C325
C324
C320
C317
C326
U516
VDDSRC_IO
VDD96_IO
VDDSRC
VDDREF
VDDPLL3_IO
VDDCPU_IO
VDD48
VDDPCI
VDDCPU
VDD
SUB_48MHZ_FSLA
FSLB_TEST_MODE
REF0_FSLC_TEST_SEL
PCI0_CR#_A
PCI1_CR#_B
PCI2_TME
PCI3
CK_PWRGD_PD#
SCLK
SDTAT
X1
X2
GNDPCI
GND48
GND
GNDSRC
GNDREF
GNDCPU
NC
PCI_STOP#
CPU_STOP#
CPUT1_F
CPUC1_F
CPUT0
CPUC0
CPUT2_ITP_SRCT8
CPUC2_ITP_SRCC8
SRCT11_CR#_H
SRCC11_CR#_G
SRCT10
SRCC10
SRCT9
SRCC9
SRCT7_CR#_F
SRCC7_CR#_E
SRCT6
SRCC6
PCI4_27_Select
PCI_F5_ITP_EN
SRCT4
SRCC4
SRCT3_CR#_C
SRCC3_CR#_D
SRCT2_SATAT
SRCC2_SATAC
27MHz_NonSS_SRCT1_SE1
27MHz_SS_SRCC1_SE2
SRCC0_DOTT_96
SRCT0_DOTC_96
ICS_ICS9LPRS355BGLFT_TSSOP_64P
R271
10K_5%_OPEN
R270
10K_5%_OPEN
R654
10K_5%
R268
10K_5%
PCISTOP#_3
CPUSTOP#_3
CLK_R_MCHBCLK
CLK_R_MCHBCLK#
CLK_R_CPUBCLK
CLK_R_CPUBCLK#
CLK_R_XDP
CLK_R_XDP#
CLK_REQH#
CLK_REQG#
R269
R655
475_1%
CLK_R_REQH#
CLK_R_REQG#
CLK_R_PCIE_NEWCARD
CLK_R_PCIE_NEWCARD#
CLK_R_PCIE_MINI2
CLK_R_PCIE_MINI2#
CLK_PCIE_LAN
CLK_PCIE_LAN#
CLK_R_DREF
CLK_R_DREF#
CLK_3S_KBPCI
CLK_3S_ICHPCI
R359
R349
33_5%
CLK_R3S_KBPCI
CLK_R3S_ICHPCI
CLK_R_PEG_MCH
CLK_R_PEG_MCH#
CLK_R_PCIE_ICH
CLK_R_PCIE_ICH#
CLK_R_SATA1
CLK_R_SATA1#
R351
10K_5%
R348
0402_OPEN
R363
0402_OPEN
R358
10K_5%
CLK_3S_REF
R645
22_5%
R647
22_5%
CLK_R3S_KBC14
CLK_R3S_ICH14

Layout note: All decoupling 0.1uF disperse closed to pin

Please place close to CLKGEN within 500mils

ITP_EN =0
SRC8/SRC8#

ITP_EN =1
ITP/ITP#

27_Selet =0
LCD_SST 100MHZ

27_Selet =1
27MHZ non-spread clock

LAYOUT NOTES : THE R684 , R685 , R683 CLOSED TO U21

FSA	FSB	FSC	FSB CLOCK FREQUENCY	HOST CLOCK FREQUENCY
1	1	0	667	166
0	1	0	800	200

*CLKREQ# pin controls SRC Table.

CR#_A	Byte5: bit6 =0(PWD)	Byte5: bit6 =1	CR#_B	Byte5: bit4 =0(PWD)	Byte5: bit4 =1
	SRC0	SRC2		SRC1	SRC4
	Byte5: bit7=0, disable CR#_A; 1,enable CR#_A			Byte5: bit5=0, disable CR#_B; 1,enable CR#_B	

CR#_C	Byte5: bit2 =0(PWD)	Byte5: bit2 =1	CR#_D	Byte5: bit0 =0(PWD)	Byte5: bit0 =1
	SRC0	SRC2		SRC1	SRC4
	Byte5: bit3=0, disable CR#_C; 1,enable CR#_C			Byte5: bit1=0, disable CR#_D; 1,enable CR#_D	

CR#_E	Byte6: bit7=0, disable CR#_E; 1,enable CR#_E
	SRC6
CR#_F	Byte6: bit6=0, disable CR#_F; 1,enable CR#_F
	SRC8
CR#_G	Byte6: bit5=0, disable CR#_G; 1,enable CR#_G
	SRC9
CR#_H	Byte6: bit4=0, disable CR#_H; 1,enable CR#_H
	SRC10

INVENTEC
TITLE VV Discrete
CLOCK_GENERATOR

SIZE	CODE	DOC. NUMBER	REV
A3	CS	1310A22294-0-MTR	A01

CHANGE by Chang, Roger 3-Nov-2008 SHEET 15 OF 54

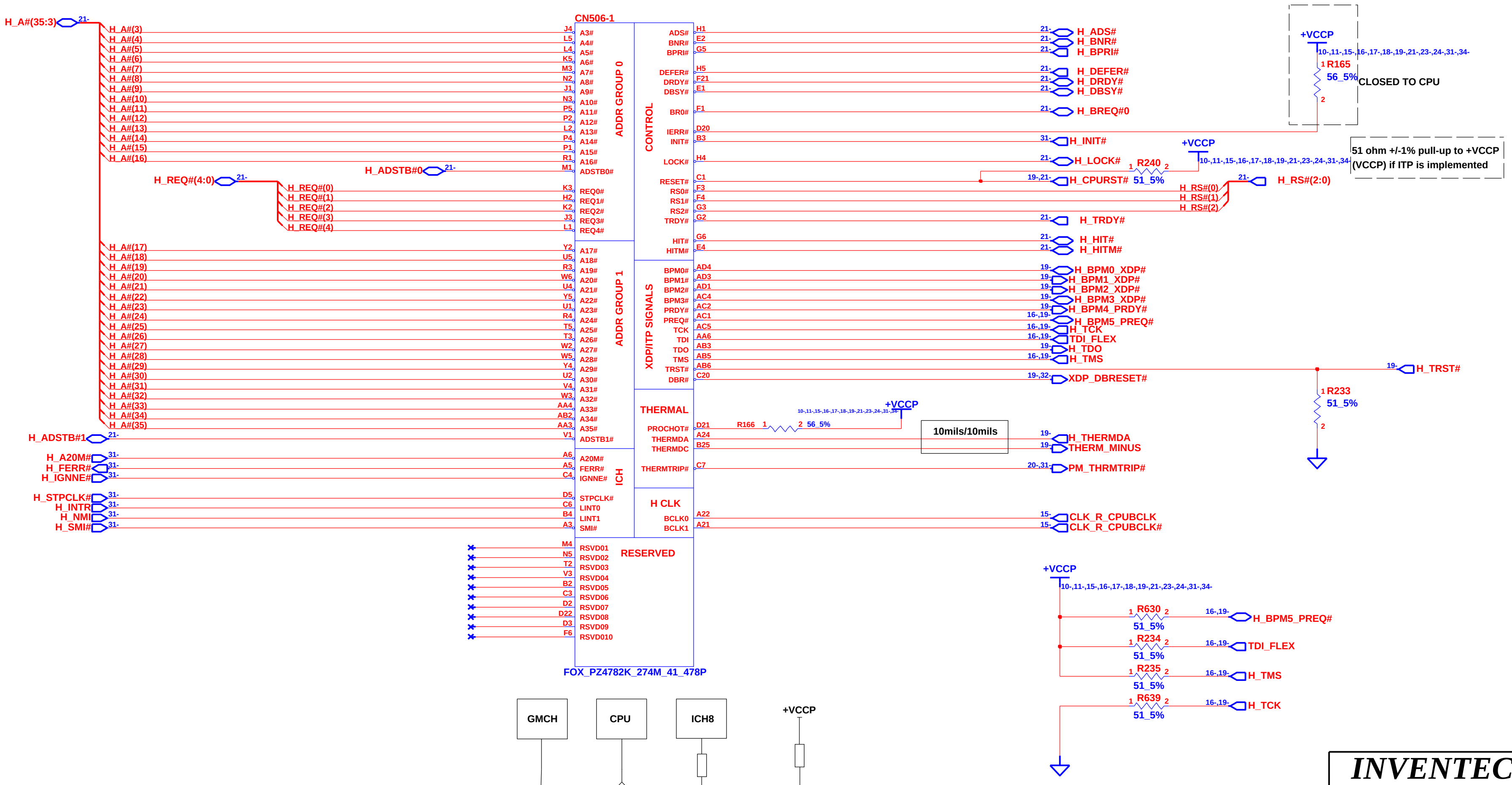
CN506-1
H_A#(35:3)
21-
H_A#(3)
H_A#(4)
H_A#(5)
H_A#(6)
H_A#(7)
H_A#(8)
H_A#(9)
H_A#(10)
H_A#(11)
H_A#(12)
H_A#(13)
H_A#(14)
H_A#(15)
H_A#(16)
H_ADSTB#0
H_REQ#(4:0)
H_REQ#(0)
H_REQ#(1)
H_REQ#(2)
H_REQ#(3)
H_REQ#(4)
H_A#(17)
H_A#(18)
H_A#(19)
H_A#(20)
H_A#(21)
H_A#(22)
H_A#(23)
H_A#(24)
H_A#(25)
H_A#(26)
H_A#(27)
H_A#(28)
H_A#(29)
H_A#(30)
H_A#(31)
H_A#(32)
H_A#(33)
H_A#(34)
H_A#(35)
H_ADSTB#1
H_A20M#
H_FERR#
H_IGNNE#
H_STPCLK#
H_INTR
H_NMI
H_SMI#
31-
J4 A3#
L5 A4#
L4 A5#
K5 A6#
M3 A7#
N2 A8#
J1 A9#
N3 A10#
P5 A11#
P2 A12#
L2 A13#
P4 A14#
P1 A15#
R1 A16#
M1 ADSTB0#
K3 REQ0#
H2 REQ1#
K2 REQ2#
J3 REQ3#
L1 REQ4#
Y2 A17#
U5 A18#
R3 A19#
W6 A20#
U4 A21#
Y5 A22#
U1 A23#
R4 A24#
T5 A25#
T3 A26#
W2 A27#
W5 A28#
Y4 A29#
U2 A30#
V4 A31#
W3 A32#
AA4 A33#
AB2 A34#
AA3 A35#
V1 ADSTB1#
A6 A20M#
A5 FERR#
C4 IGNNE#
D5 STPCLK#
C6 LINT0
B4 LINT1
A3 SMI#
M4 RSVD01
N5 RSVD02
T2 RSVD03
V3 RSVD04
B2 RSVD05
C3 RSVD06
D2 RSVD07
D22 RSVD08
D3 RSVD09
F6 RSVD010
ADDR GROUP 0
ADDR GROUP 1
ICH
CONTROL
XDP/ITP SIGNALS
THERMAL
H CLK
RESERVED
ADS# H1
BNR# E2
BPRI# G5
DEFER# H5
DRDY# F21
DBSY# E1
BR0# F1
IERR# D20
INIT# B3
LOCK# H4
RESET# C1
RS0# F3
RS1# F4
RS2# G3
TRDY# G2
HIT# G6
HITM# E4
BPM0# AD4
BPM1# AD3
BPM2# AD1
BPM3# AC4
PRDY# AC2
PREQ# AC1
TCK AC5
TDI AA6
TDO AB3
TMS AB5
TRST# AB6
DBR# C20
PROCHOT# D21
THERMDA A24
THERMDC B25
THERMTRIP# C7
BCLK0 A22
BCLK1 A21
FOX_PZ4782K_274M_41_478P
H_ADS#
H_BNR#
H_BPRI#
H_DEFER#
H_DRDY#
H_DBSY#
H_BREQ#0
H_INIT#
H_LOCK#
H_CPURST#
19-,21-
H_RS#(0)
H_RS#(1)
H_RS#(2)
H_RS#(2:0)
H_TRDY#
H_HIT#
H_HITM#
H_BPM0_XDP#
H_BPM1_XDP#
H_BPM2_XDP#
H_BPM3_XDP#
H_BPM4_PRDY#
H_BPM5_PREQ#
H_TCK
TDI_FLEX
H_TDO
H_TMS
16-,19-
19-
H_TRST#
XDP_DBRESET#
19-,32-
R166 1 2 56_5%
+VCCP
10-,11-,15-,16-,17-,18-,19-,21-,23-,24-,31-,34-
10mils/10mils
H_THERMDA
THERM_MINUS
PM_THRMTRIP#
20-,31-
CLK_R_CPUBCLK
CLK_R_CPUBCLK#
15-
+VCCP
R165 56_5%
CLOSED TO CPU
+VCCP
R240 1 2 51_5%
51 ohm +/-1% pull-up to +VCCP
(VCCP) if ITP is implemented
R233 51_5%
+VCCP
R630 51_5%
R234 51_5%
R235 51_5%
R639 51_5%
H_BPM5_PREQ#
TDI_FLEX
H_TMS
H_TCK
GMCH
CPU
ICH8
+VCCP

PM_THRMTRIP# should be T at CPU

INVENTEC

TITLE *VV Discrete*
MEROM-1

SIZE	CODE	DOC. NUMBER	REV
A3	CS	1310A22294-0-MTR	A01

CHANGE by *Chang, Roger* *3-Nov-2008* SHEET 16 OF 54

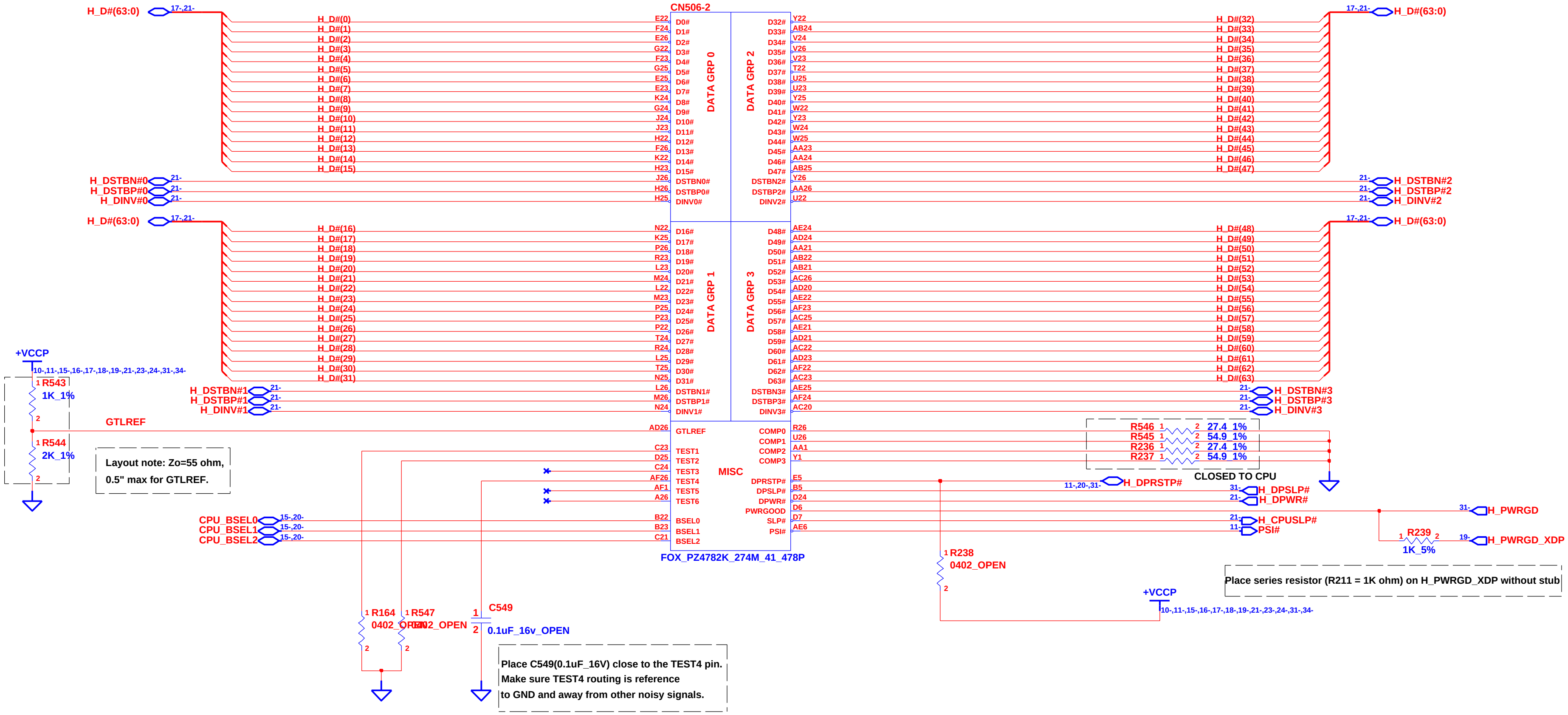
CN506-2
FOX_PZ4782K_274M_41_478P
DATA GRP 0
DATA GRP 1
DATA GRP 2
DATA GRP 3
MISC
H_D#(63:0)
17-,21-
H_D#(0) … H_D#(15)
D0# … D15#
H_D#(16) … H_D#(31)
D16# … D31#
H_D#(32) … H_D#(47)
D32# … D47#
H_D#(48) … H_D#(63)
D48# … D63#
H_DSTBN#0
H_DSTBP#0
H_DINV#0
H_DSTBN#1
H_DSTBP#1
H_DINV#1
H_DSTBN#2
H_DSTBP#2
H_DINV#2
H_DSTBN#3
H_DSTBP#3
H_DINV#3
21-
DSTBN0#
DSTBP0#
DINV0#
DSTBN1#
DSTBP1#
DINV1#
DSTBN2#
DSTBP2#
DINV2#
DSTBN3#
DSTBP3#
DINV3#
GTLREF
AD26
TEST1
TEST2
TEST3
TEST4
TEST5
TEST6
BSEL0
BSEL1
BSEL2
CPU_BSEL0
CPU_BSEL1
CPU_BSEL2
15-,20-
COMP0
COMP1
COMP2
COMP3
DPRSTP#
DPSLP#
DPWR#
PWRGOOD
SLP#
PSI#
R546 27.4_1%
R545 54.9_1%
R236 27.4_1%
R237 54.9_1%
CLOSED TO CPU
H_DPRSTP#
11-,20-,31-
H_DPSLP#
H_DPWR#
H_PWRGD
H_CPUSLP#
PSI#
R239 1K_5%
H_PWRGD_XDP
19-
R238 0402_OPEN
+VCCP
10-,11-,15-,16-,17-,18-,19-,21-,23-,24-,31-,34-
R543 1K_1%
R544 2K_1%
R164 0402_OPEN
R547 0402_OPEN
C549 0.1uF_16v_OPEN

Layout note: Zo=55 ohm,
0.5" max for GTLREF.

Place C549(0.1uF_16V) close to the TEST4 pin.
Make sure TEST4 routing is reference
to GND and away from other noisy signals.

Place series resistor (R211 = 1K ohm) on H_PWRGD_XDP without stub

INVENTEC

TITLE VV Discrete
MEROM-2

SIZE	CODE	DOC. NUMBER	REV
A3	CS	1310A22294-0-MTR	A01

CHANGE by Chang, Roger 3-Nov-2008
SHEET 17 OF 54

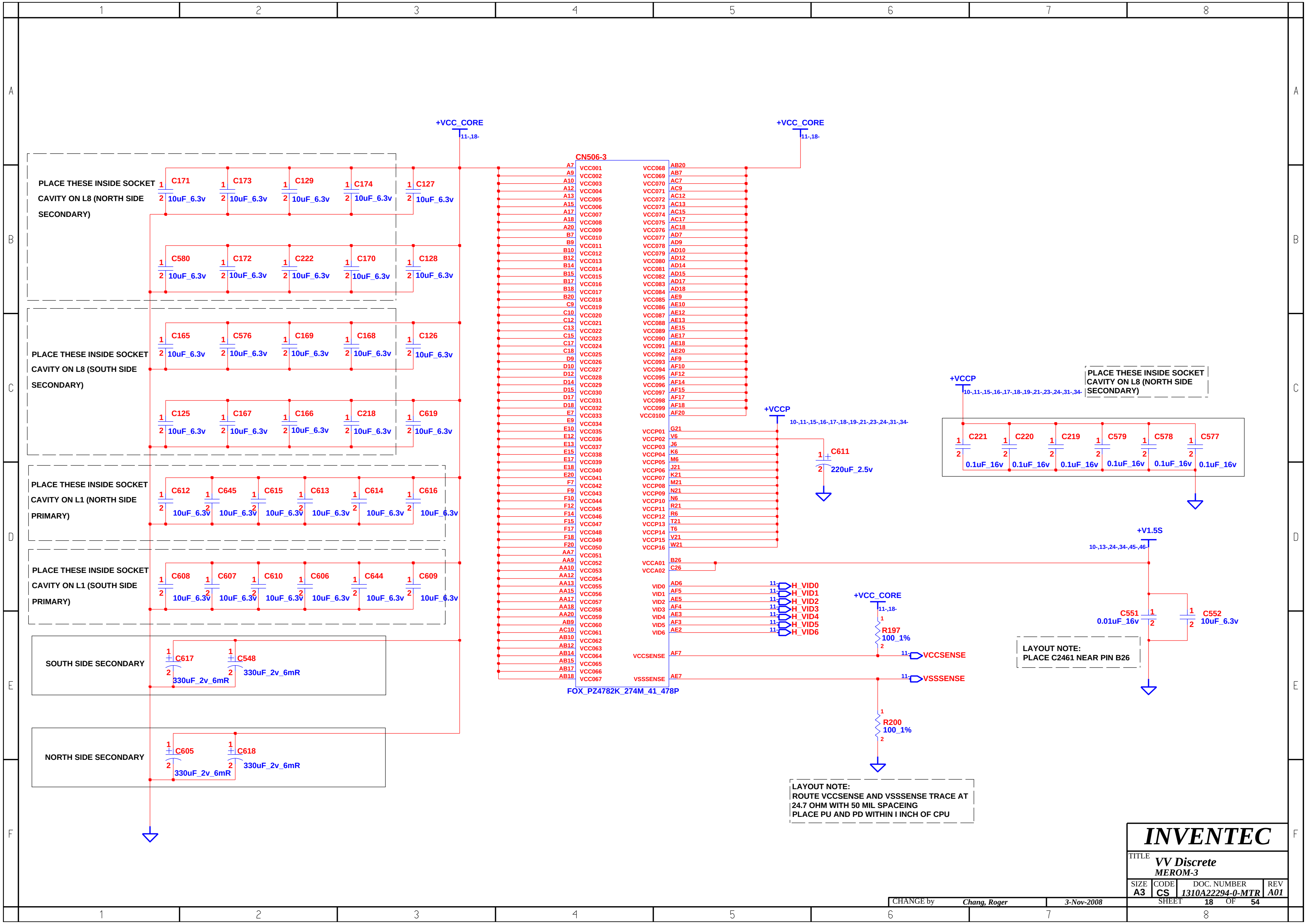
1
2
3
4
5
6
7
8
A
B
C
D
E
F
+VCC_CORE
11-,18-
+VCC_CORE
11-,18-
PLACE THESE INSIDE SOCKET
CAVITY ON L8 (NORTH SIDE
SECONDARY)
C171 10uF_6.3v
C173 10uF_6.3v
C129 10uF_6.3v
C174 10uF_6.3v
C127 10uF_6.3v
C580 10uF_6.3v
C172 10uF_6.3v
C222 10uF_6.3v
C170 10uF_6.3v
C128 10uF_6.3v
PLACE THESE INSIDE SOCKET
CAVITY ON L8 (SOUTH SIDE
SECONDARY)
C165 10uF_6.3v
C576 10uF_6.3v
C169 10uF_6.3v
C168 10uF_6.3v
C126 10uF_6.3v
C125 10uF_6.3v
C167 10uF_6.3v
C166 10uF_6.3v
C218 10uF_6.3v
C619 10uF_6.3v
PLACE THESE INSIDE SOCKET
CAVITY ON L1 (NORTH SIDE
PRIMARY)
C612 10uF_6.3v
C645 10uF_6.3v
C615 10uF_6.3v
C613 10uF_6.3v
C614 10uF_6.3v
C616 10uF_6.3v
PLACE THESE INSIDE SOCKET
CAVITY ON L1 (SOUTH SIDE
PRIMARY)
C608 10uF_6.3v
C607 10uF_6.3v
C610 10uF_6.3v
C606 10uF_6.3v
C644 10uF_6.3v
C609 10uF_6.3v
SOUTH SIDE SECONDARY
C617 330uF_2v_6mR
C548 330uF_2v_6mR
NORTH SIDE SECONDARY
C605 330uF_2v_6mR
C618 330uF_2v_6mR
CN506-3
A7 VCC001
A9 VCC002
A10 VCC003
A12 VCC004
A13 VCC005
A15 VCC006
A17 VCC007
A18 VCC008
A20 VCC009
B7 VCC010
B9 VCC011
B10 VCC012
B12 VCC013
B14 VCC014
B15 VCC015
B17 VCC016
B18 VCC017
B20 VCC018
C9 VCC019
C10 VCC020
C12 VCC021
C13 VCC022
C15 VCC023
C17 VCC024
C18 VCC025
D9 VCC026
D10 VCC027
D12 VCC028
D14 VCC029
D15 VCC030
D17 VCC031
D18 VCC032
E7 VCC033
E9 VCC034
E10 VCC035
E12 VCC036
E13 VCC037
E15 VCC038
E17 VCC039
E18 VCC040
E20 VCC041
F7 VCC042
F9 VCC043
F10 VCC044
F12 VCC045
F14 VCC046
F15 VCC047
F17 VCC048
F18 VCC049
F20 VCC050
AA7 VCC051
AA9 VCC052
AA10 VCC053
AA12 VCC054
AA13 VCC055
AA15 VCC056
AA17 VCC057
AA18 VCC058
AA20 VCC059
AB9 VCC060
AC10 VCC061
AB10 VCC062
AB12 VCC063
AB14 VCC064
AB15 VCC065
AB17 VCC066
AB18 VCC067
VCC068 AB20
VCC069 AB7
VCC070 AC7
VCC071 AC9
VCC072 AC12
VCC073 AC13
VCC074 AC15
VCC075 AC17
VCC076 AC18
VCC077 AD7
VCC078 AD9
VCC079 AD10
VCC080 AD12
VCC081 AD14
VCC082 AD15
VCC083 AD17
VCC084 AD18
VCC085 AE9
VCC086 AE10
VCC087 AE12
VCC088 AE13
VCC089 AE15
VCC090 AE17
VCC091 AE18
VCC092 AE20
VCC093 AF9
VCC094 AF10
VCC095 AF12
VCC096 AF14
VCC097 AF15
VCC098 AF17
VCC099 AF18
VCC0100 AF20
VCCP01 G21
VCCP02 V6
VCCP03 J6
VCCP04 K6
VCCP05 M6
VCCP06 J21
VCCP07 K21
VCCP08 M21
VCCP09 N21
VCCP10 N6
VCCP11 R21
VCCP12 R6
VCCP13 T21
VCCP14 T6
VCCP15 V21
VCCP16 W21
VCCA01 B26
VCCA02 C26
VID0 AD6
VID1 AF5
VID2 AE5
VID3 AF4
VID4 AE3
VID5 AF3
VID6 AE2
VCCSENSE AF7
VSSSENSE AE7
FOX_PZ4782K_274M_41_478P
+VCCP
10-,11-,15-,16-,17-,18-,19-,21-,23-,24-,31-,34-
C611 220uF_2.5v
11- H_VID0
11- H_VID1
11- H_VID2
11- H_VID3
11- H_VID4
11- H_VID5
11- H_VID6
+VCC_CORE
11-,18-
R197 100_1%
11- VCCSENSE
11- VSSSENSE
R200 100_1%
+VCCP
10-,11-,15-,16-,17-,18-,19-,21-,23-,24-,31-,34-
PLACE THESE INSIDE SOCKET
CAVITY ON L8 (NORTH SIDE
SECONDARY)
C221 0.1uF_16v
C220 0.1uF_16v
C219 0.1uF_16v
C579 0.1uF_16v
C578 0.1uF_16v
C577 0.1uF_16v
+V1.5S
10-,13-,24-,34-,45-,46-
C551 0.01uF_16v
C552 10uF_6.3v

LAYOUT NOTE:
PLACE C2461 NEAR PIN B26

LAYOUT NOTE:
ROUTE VCCSENSE AND VSSSENSE TRACE AT
24.7 OHM WITH 50 MIL SPACEING
PLACE PU AND PD WITHIN I INCH OF CPU

INVENTEC

TITLE *VV Discrete*
MEROM-3

SIZE	CODE	DOC. NUMBER	REV
A3	CS	1310A22294-0-MTR	A01

CHANGE by *Chang, Roger* *3-Nov-2008* SHEET 18 OF 54

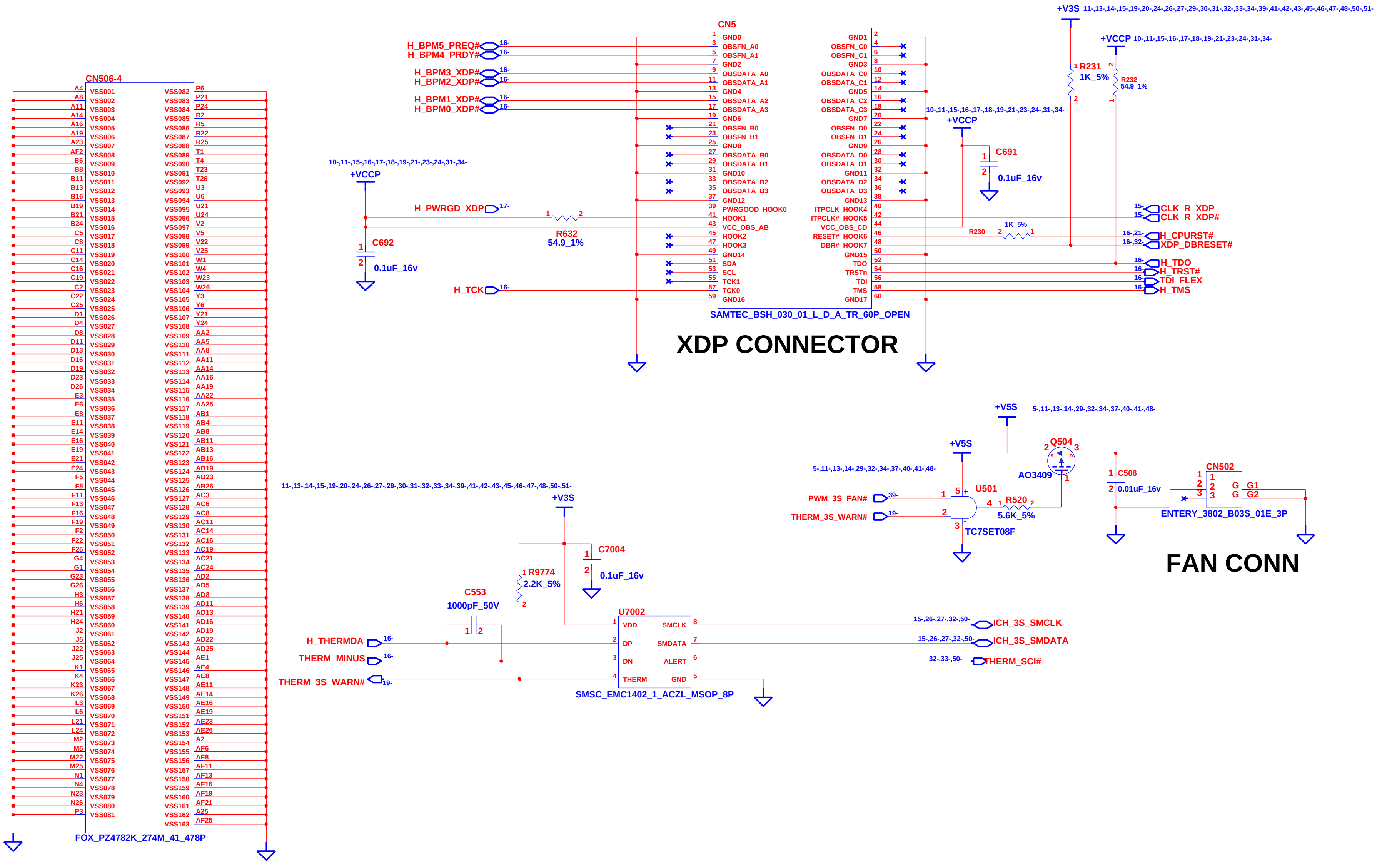
XDP CONNECTOR
FAN CONN
CN5
SAMTEC_BSH_030_01_L_D_A_TR_60P_OPEN
GND0
OBSFN_A0
OBSFN_A1
GND2
OBSDATA_A0
OBSDATA_A1
GND4
OBSDATA_A2
OBSDATA_A3
GND6
OBSFN_B0
OBSFN_B1
GND8
OBSDATA_B0
OBSDATA_B1
GND10
OBSDATA_B2
OBSDATA_B3
GND12
PWRGOOD_HOOK0
HOOK1
VCC_OBS_AB
HOOK2
HOOK3
GND14
SDA
SCL
TCK1
TCK0
GND16
GND1
OBSFN_C0
OBSFN_C1
GND3
OBSDATA_C0
OBSDATA_C1
GND5
OBSDATA_C2
OBSDATA_C3
GND7
OBSFN_D0
OBSFN_D1
GND9
OBSDATA_D0
OBSDATA_D1
GND11
OBSDATA_D2
OBSDATA_D3
GND13
ITPCLK_HOOK4
ITPCLK#_HOOK5
VCC_OBS_CD
RESET#_HOOK6
DBR#_HOOK7
GND15
TDO
TRSTn
TDI
TMS
GND17
H_BPM5_PREQ#
H_BPM4_PRDY#
H_BPM3_XDP#
H_BPM2_XDP#
H_BPM1_XDP#
H_BPM0_XDP#
H_PWRGD_XDP
H_TCK
16-
17-
R632
54.9_1%
C692
0.1uF_16v
+VCCP
10-,11-,15-,16-,17-,18-,19-,21-,23-,24-,31-,34-
C691
0.1uF_16v
+V3S
11-,13-,14-,15-,19-,20-,24-,26-,27-,29-,30-,31-,32-,33-,34-,39-,41-,42-,43-,45-,46-,47-,48-,50-,51-
+VCCP
10-,11-,15-,16-,17-,18-,19-,21-,23-,24-,31-,34-
R231
1K_5%
R232
54.9_1%
R230
1K_5%
CLK_R_XDP
CLK_R_XDP#
H_CPURST#
XDP_DBRESET#
H_TDO
H_TRST#
TDI_FLEX
H_TMS
15-
16-,21-
16-,32-
16-
CN506-4
FOX_PZ4782K_274M_41_478P
VSS001 … VSS163
A4
P6
P3
AF25
+V5S
5-,11-,13-,14-,29-,32-,34-,37-,40-,41-,48-
Q504
AO3409
C506
0.01uF_16v
CN502
ENTERY_3802_B03S_01E_3P
G1
G2
+V5S
5-,11-,13-,14-,29-,32-,34-,37-,40-,41-,48-
U501
TC7SET08F
R520
5.6K_5%
PWM_3S_FAN#
THERM_3S_WARN#
39-
19-
+V3S
11-,13-,14-,15-,19-,20-,24-,26-,27-,29-,30-,31-,32-,33-,34-,39-,41-,42-,43-,45-,46-,47-,48-,50-,51-
C7004
0.1uF_16v
R9774
2.2K_5%
C553
1000pF_50V
U7002
SMSC_EMC1402_1_ACZL_MSOP_8P
VDD
DP
DN
THERM
SMCLK
SMDATA
ALERT
GND
H_THERMDA
THERM_MINUS
THERM_3S_WARN#
ICH_3S_SMCLK
ICH_3S_SMDATA
THERM_SCI#
15-,26-,27-,32-,50-
32-,33-,50-

INVENTEC

TITLE *VV Discrete*
THERMAL&FAN

SIZE	CODE	DOC. NUMBER	REV
A3	CS	1310A22294-0-MTR	A01

CHANGE by *Chang, Roger* *3-Nov-2008* SHEET 19 OF 54

MCH_CFG(5)	LOW=DMIx2 HIGH=DMIx4

MCH_CFG(7) (CPU Strap)	LOW=RSVD HIGH=Mobile CPU

MCH_CFG(9) PCIE Graphics Lane	LOW=Reverse Lane HIGH=Normal operation

NOTE : USE 4K-OHM RESISTOR WHEN INSTALLING PULL-UP/PULL-DOWN RESISTOR ON ANY MCH-CFG CONNECTION/PINS.

MCH_CFG(13:12) XOR/ALLZ	00=PARTIAL CLOCK GATING DISABLE 01=XOR MODE ENABLE 10=ALL-Z MODE ENABLE 11=NORMAL OPERATION

MCH_CFG(16) (FSB Dynamic ODT)	LOW=Dynamic ODT Disable HIGH=Dynamic ODT Enable

MCH_CFG(11) PSB 4X CLK ENABLE	LOW=CALISTOGA HIGH=RESERVED

NOTE: CFG[2:0] STRP : 001b : 533 MT/S
011b : 667 MT/S

Note: R1351,R1352
For Calero : 80.6 ohm
For Crestline : 20 ohm

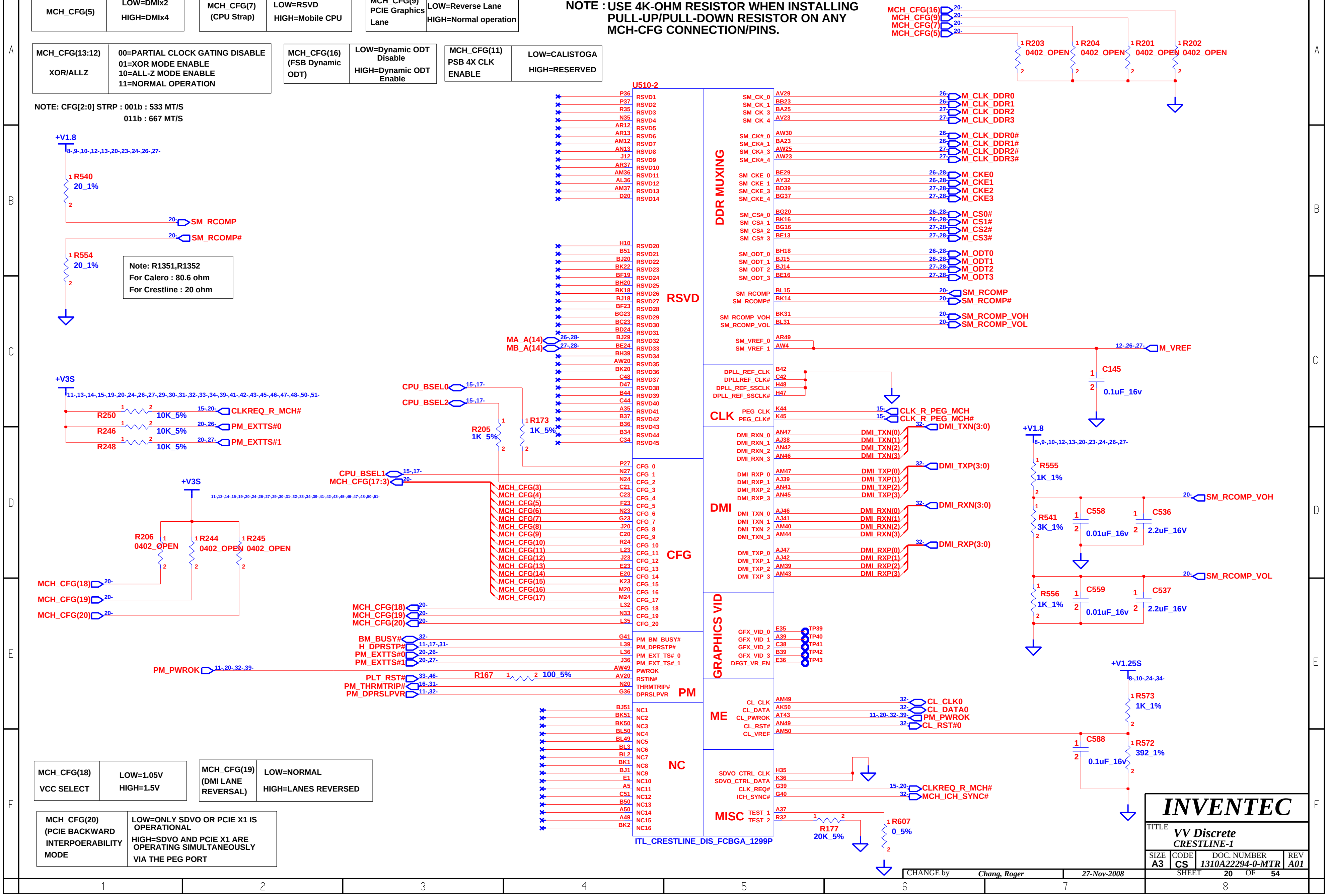
U510-2
RSVD
CFG
PM
NC
DDR MUXING
CLK
DMI
GRAPHICS VID
ME
MISC
ITL_CRESTLINE_DIS_FCBGA_1299P
+V1.8
R540
20_1%
SM_RCOMP
SM_RCOMP#
R554
20_1%
+V3S
R250
R246
R248
10K_5%
CLKREQ_R_MCH#
PM_EXTTS#0
PM_EXTTS#1
R206
0402_OPEN
R244
R245
MCH_CFG(18)
MCH_CFG(19)
MCH_CFG(20)
CPU_BSEL0
CPU_BSEL2
CPU_BSEL1
MCH_CFG(17:3)
R205
1K_5%
R173
MA_A(14)
MB_A(14)
BM_BUSY#
H_DPRSTP#
PM_PWROK
PLT_RST#
PM_THRMTRIP#
PM_DPRSLPVR
R167
100_5%
MCH_CFG(16)
MCH_CFG(9)
MCH_CFG(7)
MCH_CFG(5)
R203
R204
R201
R202
0402_OPEN
M_CLK_DDR0
M_CLK_DDR1
M_CLK_DDR2
M_CLK_DDR3
M_CLK_DDR0#
M_CLK_DDR1#
M_CLK_DDR2#
M_CLK_DDR3#
M_CKE0
M_CKE1
M_CKE2
M_CKE3
M_CS0#
M_CS1#
M_CS2#
M_CS3#
M_ODT0
M_ODT1
M_ODT2
M_ODT3
SM_RCOMP_VOH
SM_RCOMP_VOL
M_VREF
C145
0.1uF_16v
CLK_R_PEG_MCH
CLK_R_PEG_MCH#
DMI_TXN(3:0)
DMI_TXP(3:0)
DMI_RXN(3:0)
DMI_RXP(3:0)
R555
1K_1%
R541
3K_1%
C558
0.01uF_16v
C536
2.2uF_16V
R556
C559
C537
+V1.25S
R573
R572
392_1%
C588
0.1uF_16V
CL_CLK0
CL_DATA0
PM_PWROK
CL_RST#0
CLKREQ_R_MCH#
MCH_ICH_SYNC#
TP39
TP40
TP41
TP42
TP43
R177
20K_5%
R607
0_5%

MCH_CFG(18) VCC SELECT	LOW=1.05V HIGH=1.5V

MCH_CFG(19) (DMI LANE REVERSAL)	LOW=NORMAL HIGH=LANES REVERSED

MCH_CFG(20) (PCIE BACKWARD INTERPOERABILITY MODE	LOW=ONLY SDVO OR PCIE X1 IS OPERATIONAL HIGH=SDVO AND PCIE X1 ARE OPERATING SIMULTANEOUSLY VIA THE PEG PORT

INVENTEC

TITLE	VV Discrete CRESTLINE-1		
SIZE A3	CODE CS	DOC. NUMBER 1310A22294-0-MTR	REV A01
CHANGE by	Chang, Roger	27-Nov-2008	SHEET 20 OF 54

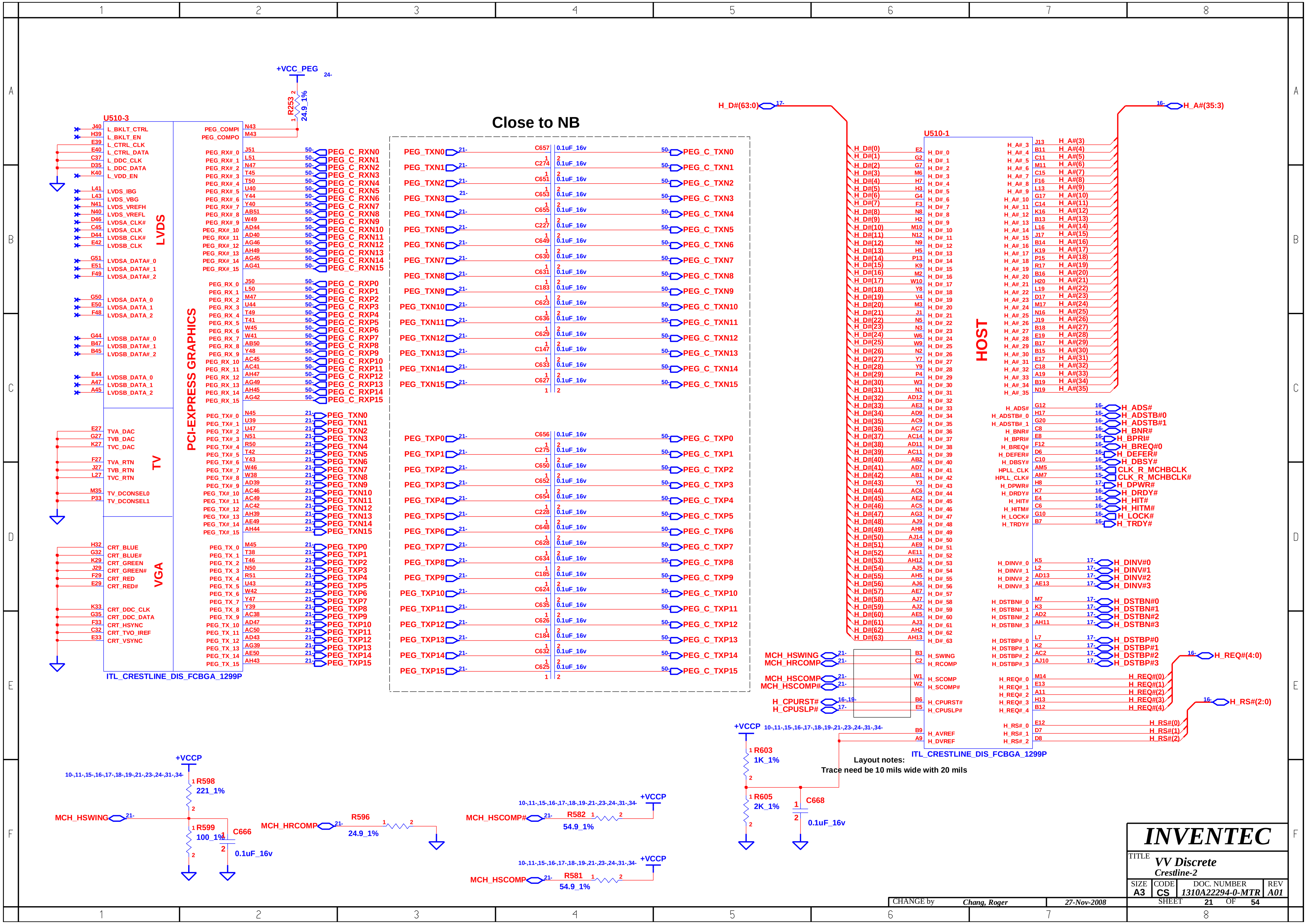

U510-3
PCI-EXPRESS GRAPHICS
LVDS
TV
VGA
ITL_CRESTLINE_DIS_FCBGA_1299P
+VCC_PEG
R253
24.9_1%
PEG_COMPI
PEG_COMPO
L_BKLT_CTRL
L_BKLT_EN
L_CTRL_CLK
L_CTRL_DATA
L_DDC_CLK
L_DDC_DATA
L_VDD_EN
LVDS_IBG
LVDS_VBG
LVDS_VREFH
LVDS_VREFL
LVDSA_CLK#
LVDSA_CLK
LVDSB_CLK#
LVDSB_CLK
LVDSA_DATA#_0
LVDSA_DATA#_1
LVDSA_DATA#_2
LVDSA_DATA_0
LVDSA_DATA_1
LVDSA_DATA_2
LVDSB_DATA#_0
LVDSB_DATA#_1
LVDSB_DATA#_2
LVDSB_DATA_0
LVDSB_DATA_1
LVDSB_DATA_2
TVA_DAC
TVB_DAC
TVC_DAC
TVA_RTN
TVB_RTN
TVC_RTN
TV_DCONSEL0
TV_DCONSEL1
CRT_BLUE
CRT_BLUE#
CRT_GREEN
CRT_GREEN#
CRT_RED
CRT_RED#
CRT_DDC_CLK
CRT_DDC_DATA
CRT_HSYNC
CRT_TVO_IREF
CRT_VSYNC
PEG_C_RXN0 … PEG_C_RXN15
PEG_C_RXP0 … PEG_C_RXP15
PEG_TXN0 … PEG_TXN15
PEG_TXP0 … PEG_TXP15
Close to NB
0.1uF_16v
PEG_C_TXN0 … PEG_C_TXN15
PEG_C_TXP0 … PEG_C_TXP15
U510-1
HOST
H_D#(63:0)
H_A#(35:3)
H_ADS#
H_ADSTB#0
H_ADSTB#1
H_BNR#
H_BPRI#
H_BREQ#0
H_DEFER#
H_DBSY#
CLK_R_MCHBCLK
CLK_R_MCHBCLK#
H_DPWR#
H_DRDY#
H_HIT#
H_HITM#
H_LOCK#
H_TRDY#
H_DINV#0
H_DINV#1
H_DINV#2
H_DINV#3
H_DSTBN#0
H_DSTBN#1
H_DSTBN#2
H_DSTBN#3
H_DSTBP#0
H_DSTBP#1
H_DSTBP#2
H_DSTBP#3
H_REQ#(4:0)
H_RS#(2:0)
MCH_HSWING
MCH_HRCOMP
MCH_HSCOMP
MCH_HSCOMP#
H_CPURST#
H_CPUSLP#
H_AVREF
H_DVREF
+VCCP
R603
1K_1%
R605
2K_1%
C668
0.1uF_16v
Layout notes:
Trace need be 10 mils wide with 20 mils
R598
221_1%
R599
100_1%
C666
0.1uF_16v
R596
24.9_1%
R582
54.9_1%
R581
54.9_1%
10-,11-,15-,16-,17-,18-,19-,21-,23-,24-,31-,34-

INVENTEC

TITLE VV Discrete
Crestline-2

SIZE	CODE	DOC. NUMBER	REV
A3	CS	1310A22294-0-MTR	A01

CHANGE by Chang, Roger 27-Nov-2008

SHEET 21 OF 54

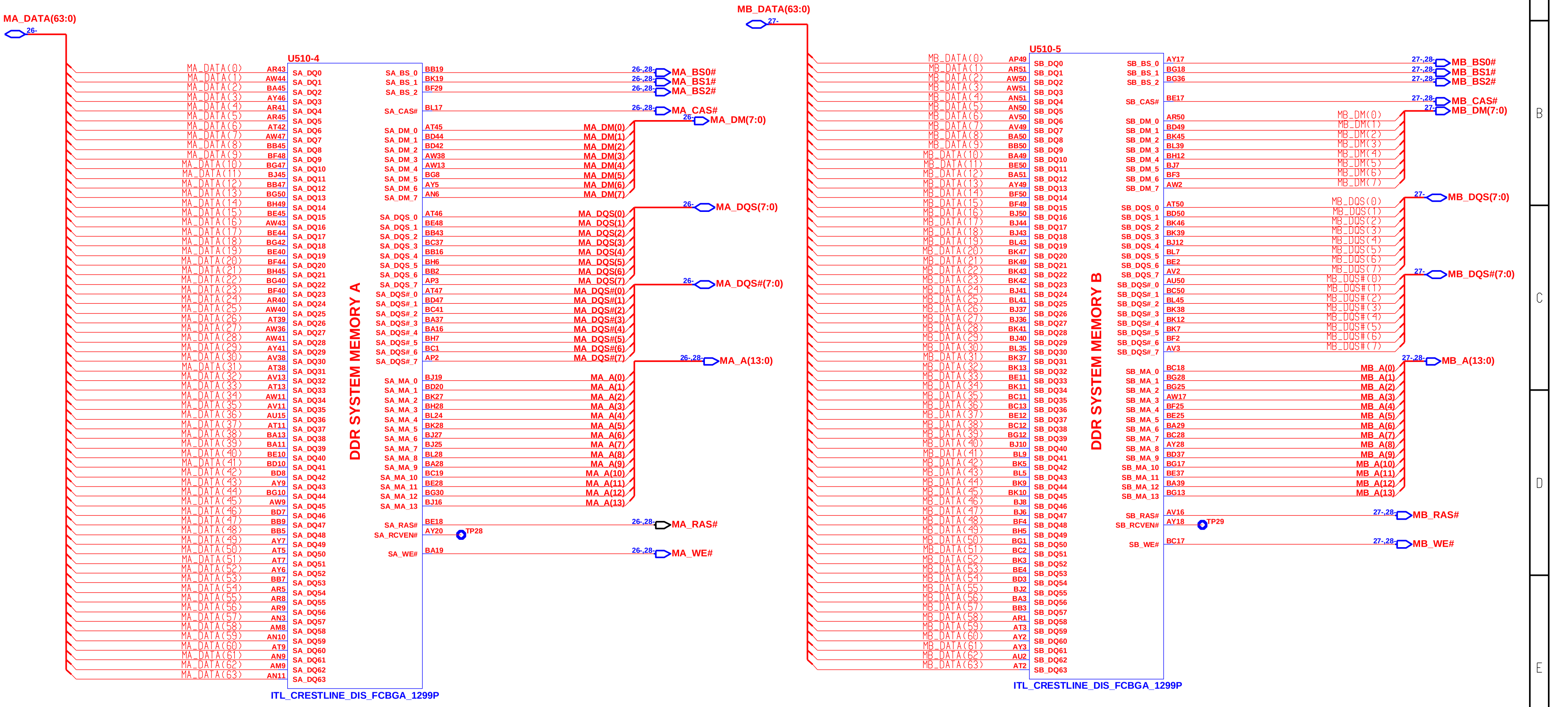
MA_DATA(63:0)
26-
U510-4
DDR SYSTEM MEMORY A
ITL_CRESTLINE_DIS_FCBGA_1299P
MA_DATA(0) AR43 SA_DQ0
MA_DATA(1) AW44 SA_DQ1
MA_DATA(2) BA45 SA_DQ2
MA_DATA(3) AY46 SA_DQ3
MA_DATA(4) AR41 SA_DQ4
MA_DATA(5) AR45 SA_DQ5
MA_DATA(6) AT42 SA_DQ6
MA_DATA(7) AW47 SA_DQ7
MA_DATA(8) BB45 SA_DQ8
MA_DATA(9) BF48 SA_DQ9
MA_DATA(10) BG47 SA_DQ10
MA_DATA(11) BJ45 SA_DQ11
MA_DATA(12) BB47 SA_DQ12
MA_DATA(13) BG50 SA_DQ13
MA_DATA(14) BH49 SA_DQ14
MA_DATA(15) BE45 SA_DQ15
MA_DATA(16) AW43 SA_DQ16
MA_DATA(17) BE44 SA_DQ17
MA_DATA(18) BG42 SA_DQ18
MA_DATA(19) BE40 SA_DQ19
MA_DATA(20) BF44 SA_DQ20
MA_DATA(21) BH45 SA_DQ21
MA_DATA(22) BG40 SA_DQ22
MA_DATA(23) BF40 SA_DQ23
MA_DATA(24) AR40 SA_DQ24
MA_DATA(25) AW40 SA_DQ25
MA_DATA(26) AT39 SA_DQ26
MA_DATA(27) AW36 SA_DQ27
MA_DATA(28) AW41 SA_DQ28
MA_DATA(29) AY41 SA_DQ29
MA_DATA(30) AV38 SA_DQ30
MA_DATA(31) AT38 SA_DQ31
MA_DATA(32) AV13 SA_DQ32
MA_DATA(33) AT13 SA_DQ33
MA_DATA(34) AW11 SA_DQ34
MA_DATA(35) AV11 SA_DQ35
MA_DATA(36) AU15 SA_DQ36
MA_DATA(37) AT11 SA_DQ37
MA_DATA(38) BA13 SA_DQ38
MA_DATA(39) BA11 SA_DQ39
MA_DATA(40) BE10 SA_DQ40
MA_DATA(41) BD10 SA_DQ41
MA_DATA(42) BD8 SA_DQ42
MA_DATA(43) AY9 SA_DQ43
MA_DATA(44) BG10 SA_DQ44
MA_DATA(45) AW9 SA_DQ45
MA_DATA(46) BD7 SA_DQ46
MA_DATA(47) BB9 SA_DQ47
MA_DATA(48) BB5 SA_DQ48
MA_DATA(49) AY7 SA_DQ49
MA_DATA(50) AT5 SA_DQ50
MA_DATA(51) AT7 SA_DQ51
MA_DATA(52) AY6 SA_DQ52
MA_DATA(53) BB7 SA_DQ53
MA_DATA(54) AR5 SA_DQ54
MA_DATA(55) AR8 SA_DQ55
MA_DATA(56) AR9 SA_DQ56
MA_DATA(57) AN3 SA_DQ57
MA_DATA(58) AM8 SA_DQ58
MA_DATA(59) AN10 SA_DQ59
MA_DATA(60) AT9 SA_DQ60
MA_DATA(61) AN9 SA_DQ61
MA_DATA(62) AM9 SA_DQ62
MA_DATA(63) AN11 SA_DQ63
SA_BS_0 BB19 26-,28- MA_BS0#
SA_BS_1 BK19 26-,28- MA_BS1#
SA_BS_2 BF29 26-,28- MA_BS2#
SA_CAS# BL17 26-,28- MA_CAS#
26- MA_DM(7:0)
SA_DM_0 AT45 MA_DM(0)
SA_DM_1 BD44 MA_DM(1)
SA_DM_2 BD42 MA_DM(2)
SA_DM_3 AW38 MA_DM(3)
SA_DM_4 AW13 MA_DM(4)
SA_DM_5 BG8 MA_DM(5)
SA_DM_6 AY5 MA_DM(6)
SA_DM_7 AN6 MA_DM(7)
26- MA_DQS(7:0)
SA_DQS_0 AT46 MA_DQS(0)
SA_DQS_1 BE48 MA_DQS(1)
SA_DQS_2 BB43 MA_DQS(2)
SA_DQS_3 BC37 MA_DQS(3)
SA_DQS_4 BB16 MA_DQS(4)
SA_DQS_5 BH6 MA_DQS(5)
SA_DQS_6 BB2 MA_DQS(6)
SA_DQS_7 AP3 MA_DQS(7)
26- MA_DQS#(7:0)
SA_DQS#_0 AT47 MA_DQS#(0)
SA_DQS#_1 BD47 MA_DQS#(1)
SA_DQS#_2 BC41 MA_DQS#(2)
SA_DQS#_3 BA37 MA_DQS#(3)
SA_DQS#_4 BA16 MA_DQS#(4)
SA_DQS#_5 BH7 MA_DQS#(5)
SA_DQS#_6 BC1 MA_DQS#(6)
SA_DQS#_7 AP2 MA_DQS#(7)
26-,28- MA_A(13:0)
SA_MA_0 BJ19 MA_A(0)
SA_MA_1 BD20 MA_A(1)
SA_MA_2 BK27 MA_A(2)
SA_MA_3 BH28 MA_A(3)
SA_MA_4 BL24 MA_A(4)
SA_MA_5 BK28 MA_A(5)
SA_MA_6 BJ27 MA_A(6)
SA_MA_7 BJ25 MA_A(7)
SA_MA_8 BL28 MA_A(8)
SA_MA_9 BA28 MA_A(9)
SA_MA_10 BC19 MA_A(10)
SA_MA_11 BE28 MA_A(11)
SA_MA_12 BG30 MA_A(12)
SA_MA_13 BJ16 MA_A(13)
SA_RAS# BE18 26-,28- MA_RAS#
SA_RCVEN# AY20 TP28
SA_WE# BA19 26-,28- MA_WE#
MB_DATA(63:0)
27-
U510-5
DDR SYSTEM MEMORY B
ITL_CRESTLINE_DIS_FCBGA_1299P
MB_DATA(0) AP49 SB_DQ0
MB_DATA(1) AR51 SB_DQ1
MB_DATA(2) AW50 SB_DQ2
MB_DATA(3) AW51 SB_DQ3
MB_DATA(4) AN51 SB_DQ4
MB_DATA(5) AN50 SB_DQ5
MB_DATA(6) AV50 SB_DQ6
MB_DATA(7) AV49 SB_DQ7
MB_DATA(8) BA50 SB_DQ8
MB_DATA(9) BB50 SB_DQ9
MB_DATA(10) BA49 SB_DQ10
MB_DATA(11) BE50 SB_DQ11
MB_DATA(12) BA51 SB_DQ12
MB_DATA(13) AY49 SB_DQ13
MB_DATA(14) BF50 SB_DQ14
MB_DATA(15) BF49 SB_DQ15
MB_DATA(16) BJ50 SB_DQ16
MB_DATA(17) BJ44 SB_DQ17
MB_DATA(18) BJ43 SB_DQ18
MB_DATA(19) BL43 SB_DQ19
MB_DATA(20) BK47 SB_DQ20
MB_DATA(21) BK49 SB_DQ21
MB_DATA(22) BK43 SB_DQ22
MB_DATA(23) BK42 SB_DQ23
MB_DATA(24) BJ41 SB_DQ24
MB_DATA(25) BL41 SB_DQ25
MB_DATA(26) BJ37 SB_DQ26
MB_DATA(27) BJ36 SB_DQ27
MB_DATA(28) BK41 SB_DQ28
MB_DATA(29) BJ40 SB_DQ29
MB_DATA(30) BL35 SB_DQ30
MB_DATA(31) BK37 SB_DQ31
MB_DATA(32) BK13 SB_DQ32
MB_DATA(33) BE11 SB_DQ33
MB_DATA(34) BK11 SB_DQ34
MB_DATA(35) BC11 SB_DQ35
MB_DATA(36) BC13 SB_DQ36
MB_DATA(37) BE12 SB_DQ37
MB_DATA(38) BC12 SB_DQ38
MB_DATA(39) BG12 SB_DQ39
MB_DATA(40) BJ10 SB_DQ40
MB_DATA(41) BL9 SB_DQ41
MB_DATA(42) BK5 SB_DQ42
MB_DATA(43) BL5 SB_DQ43
MB_DATA(44) BK9 SB_DQ44
MB_DATA(45) BK10 SB_DQ45
MB_DATA(46) BJ8 SB_DQ46
MB_DATA(47) BJ6 SB_DQ47
MB_DATA(48) BF4 SB_DQ48
MB_DATA(49) BH5 SB_DQ49
MB_DATA(50) BG1 SB_DQ50
MB_DATA(51) BC2 SB_DQ51
MB_DATA(52) BK3 SB_DQ52
MB_DATA(53) BE4 SB_DQ53
MB_DATA(54) BD3 SB_DQ54
MB_DATA(55) BJ2 SB_DQ55
MB_DATA(56) BA3 SB_DQ56
MB_DATA(57) BB3 SB_DQ57
MB_DATA(58) AR1 SB_DQ58
MB_DATA(59) AT3 SB_DQ59
MB_DATA(60) AY2 SB_DQ60
MB_DATA(61) AY3 SB_DQ61
MB_DATA(62) AU2 SB_DQ62
MB_DATA(63) AT2 SB_DQ63
SB_BS_0 AY17 27-,28- MB_BS0#
SB_BS_1 BG18 27-,28- MB_BS1#
SB_BS_2 BG36 27-,28- MB_BS2#
SB_CAS# BE17 27-,28- MB_CAS#
27- MB_DM(7:0)
SB_DM_0 AR50 MB_DM(0)
SB_DM_1 BD49 MB_DM(1)
SB_DM_2 BK45 MB_DM(2)
SB_DM_3 BL39 MB_DM(3)
SB_DM_4 BH12 MB_DM(4)
SB_DM_5 BJ7 MB_DM(5)
SB_DM_6 BF3 MB_DM(6)
SB_DM_7 AW2 MB_DM(7)
27- MB_DQS(7:0)
SB_DQS_0 AT50 MB_DQS(0)
SB_DQS_1 BD50 MB_DQS(1)
SB_DQS_2 BK46 MB_DQS(2)
SB_DQS_3 BK39 MB_DQS(3)
SB_DQS_4 BJ12 MB_DQS(4)
SB_DQS_5 BL7 MB_DQS(5)
SB_DQS_6 BE2 MB_DQS(6)
SB_DQS_7 AV2 MB_DQS(7)
27- MB_DQS#(7:0)
SB_DQS#_0 AU50 MB_DQS#(0)
SB_DQS#_1 BC50 MB_DQS#(1)
SB_DQS#_2 BL45 MB_DQS#(2)
SB_DQS#_3 BK38 MB_DQS#(3)
SB_DQS#_4 BK12 MB_DQS#(4)
SB_DQS#_5 BK7 MB_DQS#(5)
SB_DQS#_6 BF2 MB_DQS#(6)
SB_DQS#_7 AV3 MB_DQS#(7)
27-,28- MB_A(13:0)
SB_MA_0 BC18 MB_A(0)
SB_MA_1 BG28 MB_A(1)
SB_MA_2 BG25 MB_A(2)
SB_MA_3 AW17 MB_A(3)
SB_MA_4 BF25 MB_A(4)
SB_MA_5 BE25 MB_A(5)
SB_MA_6 BA29 MB_A(6)
SB_MA_7 BC28 MB_A(7)
SB_MA_8 AY28 MB_A(8)
SB_MA_9 BD37 MB_A(9)
SB_MA_10 BG17 MB_A(10)
SB_MA_11 BE37 MB_A(11)
SB_MA_12 BA39 MB_A(12)
SB_MA_13 BG13 MB_A(13)
SB_RAS# AV16 27-,28- MB_RAS#
SB_RCVEN# AY18 TP29
SB_WE# BC17 27-,28- MB_WE#

CHANGE by Chang, Roger 27-Nov-2008

INVENTEC

TITLE VV Discrete
CRESTLINE-3

SIZE	CODE	DOC. NUMBER	REV
A3	CS	1310A22294-0-MTR	A01

SHEET 22 OF 54

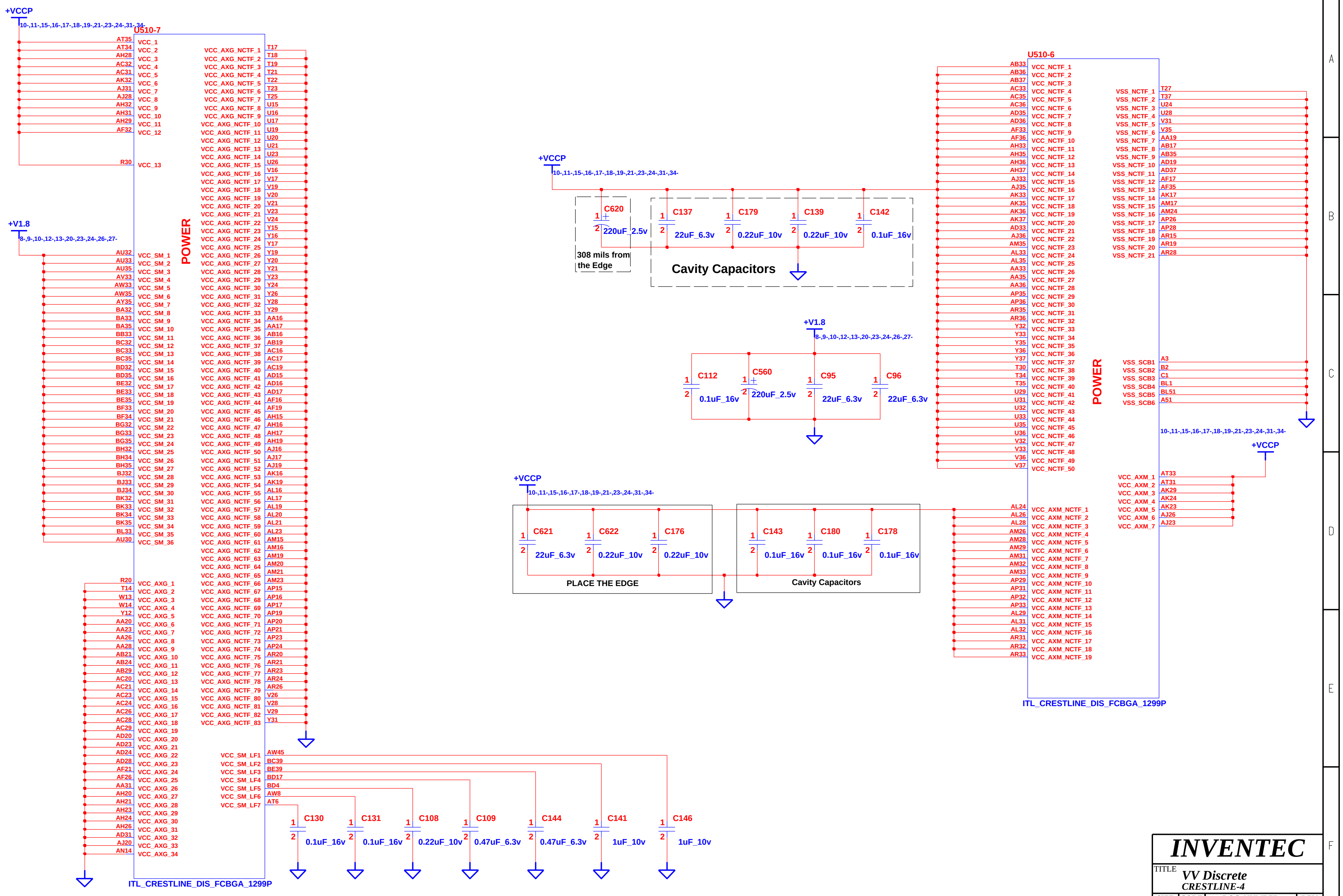

+VCCP
10-,11-,15-,16-,17-,18-,19-,21-,23-,24-,31-,34-
U510-7
AT35 VCC_1
AT34 VCC_2
AH28 VCC_3
AC32 VCC_4
AC31 VCC_5
AK32 VCC_6
AJ31 VCC_7
AJ28 VCC_8
AH32 VCC_9
AH31 VCC_10
AH29 VCC_11
AF32 VCC_12
R30 VCC_13
+V1.8
8-,9-,10-,12-,13-,20-,23-,24-,26-,27-
AU32 VCC_SM_1
AU33 VCC_SM_2
AU35 VCC_SM_3
AV33 VCC_SM_4
AW33 VCC_SM_5
AW35 VCC_SM_6
AY35 VCC_SM_7
BA32 VCC_SM_8
BA33 VCC_SM_9
BA35 VCC_SM_10
BB33 VCC_SM_11
BC32 VCC_SM_12
BC33 VCC_SM_13
BC35 VCC_SM_14
BD32 VCC_SM_15
BD35 VCC_SM_16
BE32 VCC_SM_17
BE33 VCC_SM_18
BE35 VCC_SM_19
BF33 VCC_SM_20
BF34 VCC_SM_21
BG32 VCC_SM_22
BG33 VCC_SM_23
BG35 VCC_SM_24
BH32 VCC_SM_25
BH34 VCC_SM_26
BH35 VCC_SM_27
BJ32 VCC_SM_28
BJ33 VCC_SM_29
BJ34 VCC_SM_30
BK32 VCC_SM_31
BK33 VCC_SM_32
BK34 VCC_SM_33
BK35 VCC_SM_34
BL33 VCC_SM_35
AU30 VCC_SM_36
R20 VCC_AXG_1
T14 VCC_AXG_2
W13 VCC_AXG_3
W14 VCC_AXG_4
Y12 VCC_AXG_5
AA20 VCC_AXG_6
AA23 VCC_AXG_7
AA26 VCC_AXG_8
AA28 VCC_AXG_9
AB21 VCC_AXG_10
AB24 VCC_AXG_11
AB29 VCC_AXG_12
AC20 VCC_AXG_13
AC21 VCC_AXG_14
AC23 VCC_AXG_15
AC24 VCC_AXG_16
AC26 VCC_AXG_17
AC28 VCC_AXG_18
AC29 VCC_AXG_19
AD20 VCC_AXG_20
AD23 VCC_AXG_21
AD24 VCC_AXG_22
AD28 VCC_AXG_23
AF21 VCC_AXG_24
AF26 VCC_AXG_25
AA31 VCC_AXG_26
AH20 VCC_AXG_27
AH21 VCC_AXG_28
AH23 VCC_AXG_29
AH24 VCC_AXG_30
AH26 VCC_AXG_31
AD31 VCC_AXG_32
AJ20 VCC_AXG_33
AN14 VCC_AXG_34
POWER
VCC_AXG_NCTF_1 T17
VCC_AXG_NCTF_2 T18
VCC_AXG_NCTF_3 T19
VCC_AXG_NCTF_4 T21
VCC_AXG_NCTF_5 T22
VCC_AXG_NCTF_6 T23
VCC_AXG_NCTF_7 T25
VCC_AXG_NCTF_8 U15
VCC_AXG_NCTF_9 U16
VCC_AXG_NCTF_10 U17
VCC_AXG_NCTF_11 U19
VCC_AXG_NCTF_12 U20
VCC_AXG_NCTF_13 U21
VCC_AXG_NCTF_14 U23
VCC_AXG_NCTF_15 U26
VCC_AXG_NCTF_16 V16
VCC_AXG_NCTF_17 V17
VCC_AXG_NCTF_18 V19
VCC_AXG_NCTF_19 V20
VCC_AXG_NCTF_20 V21
VCC_AXG_NCTF_21 V23
VCC_AXG_NCTF_22 V24
VCC_AXG_NCTF_23 Y15
VCC_AXG_NCTF_24 Y16
VCC_AXG_NCTF_25 Y17
VCC_AXG_NCTF_26 Y19
VCC_AXG_NCTF_27 Y20
VCC_AXG_NCTF_28 Y21
VCC_AXG_NCTF_29 Y23
VCC_AXG_NCTF_30 Y24
VCC_AXG_NCTF_31 Y26
VCC_AXG_NCTF_32 Y28
VCC_AXG_NCTF_33 Y29
VCC_AXG_NCTF_34 AA16
VCC_AXG_NCTF_35 AA17
VCC_AXG_NCTF_36 AB16
VCC_AXG_NCTF_37 AB19
VCC_AXG_NCTF_38 AC16
VCC_AXG_NCTF_39 AC17
VCC_AXG_NCTF_40 AC19
VCC_AXG_NCTF_41 AD15
VCC_AXG_NCTF_42 AD16
VCC_AXG_NCTF_43 AD17
VCC_AXG_NCTF_44 AF16
VCC_AXG_NCTF_45 AF19
VCC_AXG_NCTF_46 AH15
VCC_AXG_NCTF_47 AH16
VCC_AXG_NCTF_48 AH17
VCC_AXG_NCTF_49 AH19
VCC_AXG_NCTF_50 AJ16
VCC_AXG_NCTF_51 AJ17
VCC_AXG_NCTF_52 AJ19
VCC_AXG_NCTF_53 AK16
VCC_AXG_NCTF_54 AK19
VCC_AXG_NCTF_55 AL16
VCC_AXG_NCTF_56 AL17
VCC_AXG_NCTF_57 AL19
VCC_AXG_NCTF_58 AL20
VCC_AXG_NCTF_59 AL21
VCC_AXG_NCTF_60 AL23
VCC_AXG_NCTF_61 AM15
VCC_AXG_NCTF_62 AM16
VCC_AXG_NCTF_63 AM19
VCC_AXG_NCTF_64 AM20
VCC_AXG_NCTF_65 AM21
VCC_AXG_NCTF_66 AM23
VCC_AXG_NCTF_67 AP15
VCC_AXG_NCTF_68 AP16
VCC_AXG_NCTF_69 AP17
VCC_AXG_NCTF_70 AP19
VCC_AXG_NCTF_71 AP20
VCC_AXG_NCTF_72 AP21
VCC_AXG_NCTF_73 AP23
VCC_AXG_NCTF_74 AP24
VCC_AXG_NCTF_75 AR20
VCC_AXG_NCTF_76 AR21
VCC_AXG_NCTF_77 AR23
VCC_AXG_NCTF_78 AR24
VCC_AXG_NCTF_79 AR26
VCC_AXG_NCTF_80 V26
VCC_AXG_NCTF_81 V28
VCC_AXG_NCTF_82 V29
VCC_AXG_NCTF_83 Y31
VCC_SM_LF1 AW45
VCC_SM_LF2 BC39
VCC_SM_LF3 BE39
VCC_SM_LF4 BD17
VCC_SM_LF5 BD4
VCC_SM_LF6 AW8
VCC_SM_LF7 AT6
ITL_CRESTLINE_DIS_FCBGA_1299P
C130 0.1uF_16v
C131 0.1uF_16v
C108 0.22uF_10v
C109 0.47uF_6.3v
C144 0.47uF_6.3v
C141 1uF_10v
C146 1uF_10v
+VCCP
10-,11-,15-,16-,17-,18-,19-,21-,23-,24-,31-,34-
C620 220uF_2.5v
308 mils from the Edge
C137 22uF_6.3v
C179 0.22uF_10v
C139 0.22uF_10v
C142 0.1uF_16v
Cavity Capacitors
+V1.8
8-,9-,10-,12-,13-,20-,23-,24-,26-,27-
C112 0.1uF_16v
C560 220uF_2.5v
C95 22uF_6.3v
C96 22uF_6.3v
+VCCP
10-,11-,15-,16-,17-,18-,19-,21-,23-,24-,31-,34-
C621 22uF_6.3v
C622 0.22uF_10v
C176 0.22uF_10v
PLACE THE EDGE
C143 0.1uF_16v
C180 0.1uF_16v
C178 0.1uF_16v
Cavity Capacitors
U510-6
AB33 VCC_NCTF_1
AB36 VCC_NCTF_2
AB37 VCC_NCTF_3
AC33 VCC_NCTF_4
AC35 VCC_NCTF_5
AC36 VCC_NCTF_6
AD35 VCC_NCTF_7
AD36 VCC_NCTF_8
AF33 VCC_NCTF_9
AF36 VCC_NCTF_10
AH33 VCC_NCTF_11
AH35 VCC_NCTF_12
AH36 VCC_NCTF_13
AH37 VCC_NCTF_14
AJ33 VCC_NCTF_15
AJ35 VCC_NCTF_16
AK33 VCC_NCTF_17
AK35 VCC_NCTF_18
AK36 VCC_NCTF_19
AK37 VCC_NCTF_20
AD33 VCC_NCTF_21
AJ36 VCC_NCTF_22
AM35 VCC_NCTF_23
AL33 VCC_NCTF_24
AL35 VCC_NCTF_25
AA33 VCC_NCTF_26
AA35 VCC_NCTF_27
AA36 VCC_NCTF_28
AP35 VCC_NCTF_29
AP36 VCC_NCTF_30
AR35 VCC_NCTF_31
AR36 VCC_NCTF_32
Y32 VCC_NCTF_33
Y33 VCC_NCTF_34
Y35 VCC_NCTF_35
Y36 VCC_NCTF_36
Y37 VCC_NCTF_37
T30 VCC_NCTF_38
T34 VCC_NCTF_39
T35 VCC_NCTF_40
U29 VCC_NCTF_41
U31 VCC_NCTF_42
U32 VCC_NCTF_43
U33 VCC_NCTF_44
U35 VCC_NCTF_45
U36 VCC_NCTF_46
V32 VCC_NCTF_47
V33 VCC_NCTF_48
V36 VCC_NCTF_49
V37 VCC_NCTF_50
VSS_NCTF_1 T27
VSS_NCTF_2 T37
VSS_NCTF_3 U24
VSS_NCTF_4 U28
VSS_NCTF_5 V31
VSS_NCTF_6 V35
VSS_NCTF_7 AA19
VSS_NCTF_8 AB17
VSS_NCTF_9 AB35
VSS_NCTF_10 AD19
VSS_NCTF_11 AD37
VSS_NCTF_12 AF17
VSS_NCTF_13 AF35
VSS_NCTF_14 AK17
VSS_NCTF_15 AM17
VSS_NCTF_16 AM24
VSS_NCTF_17 AP26
VSS_NCTF_18 AP28
VSS_NCTF_19 AR15
VSS_NCTF_20 AR19
VSS_NCTF_21 AR28
POWER
VSS_SCB1 A3
VSS_SCB2 B2
VSS_SCB3 C1
VSS_SCB4 BL1
VSS_SCB5 BL51
VSS_SCB6 A51
10-,11-,15-,16-,17-,18-,19-,21-,23-,24-,31-,34-
+VCCP
VCC_AXM_1 AT33
VCC_AXM_2 AT31
VCC_AXM_3 AK29
VCC_AXM_4 AK24
VCC_AXM_5 AK23
VCC_AXM_6 AJ26
VCC_AXM_7 AJ23
AL24 VCC_AXM_NCTF_1
AL26 VCC_AXM_NCTF_2
AL28 VCC_AXM_NCTF_3
AM26 VCC_AXM_NCTF_4
AM28 VCC_AXM_NCTF_5
AM29 VCC_AXM_NCTF_6
AM31 VCC_AXM_NCTF_7
AM32 VCC_AXM_NCTF_8
AM33 VCC_AXM_NCTF_9
AP29 VCC_AXM_NCTF_10
AP31 VCC_AXM_NCTF_11
AP32 VCC_AXM_NCTF_12
AP33 VCC_AXM_NCTF_13
AL29 VCC_AXM_NCTF_14
AL31 VCC_AXM_NCTF_15
AL32 VCC_AXM_NCTF_16
AR31 VCC_AXM_NCTF_17
AR32 VCC_AXM_NCTF_18
AR33 VCC_AXM_NCTF_19
ITL_CRESTLINE_DIS_FCBGA_1299P

INVENTEC

TITLE	*VV Discrete* *CRESTLINE-4*		
SIZE A3	CODE CS	DOC. NUMBER *1310A22294-0-MTR*	REV *A01*

CHANGE by	*Chang, Roger*	*27-Nov-2008*	SHEET 23 OF 54

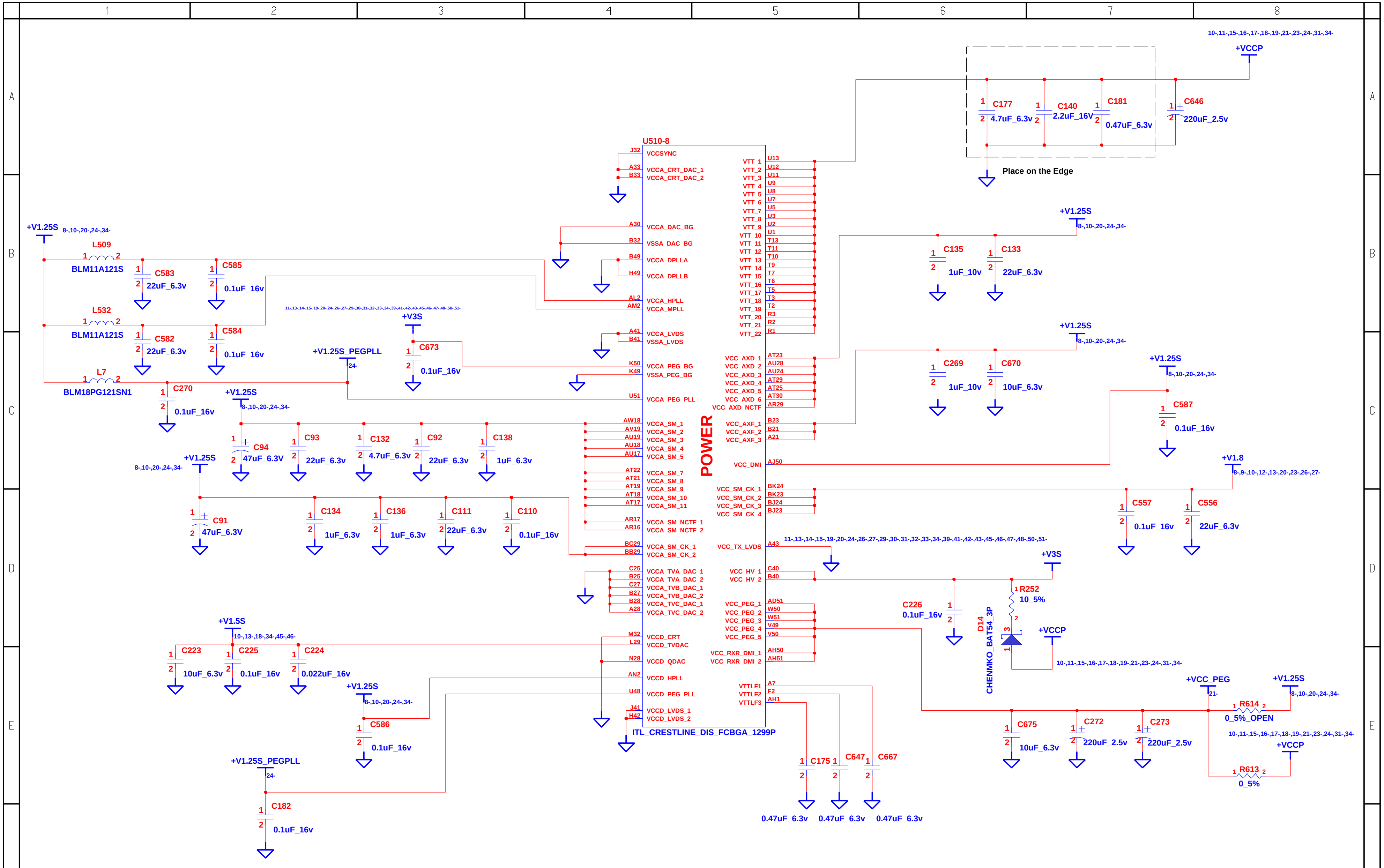
10-,11-,15-,16-,17-,18-,19-,21-,23-,24-,31-,34-
+VCCP
C177
4.7uF_6.3v
C140
2.2uF_16V
C181
0.47uF_6.3v
C646
220uF_2.5v
Place on the Edge
U510-8
J32
VCCSYNC
A33
VCCA_CRT_DAC_1
B33
VCCA_CRT_DAC_2
A30
VCCA_DAC_BG
B32
VSSA_DAC_BG
B49
VCCA_DPLLA
H49
VCCA_DPLLB
AL2
VCCA_HPLL
AM2
VCCA_MPLL
A41
VCCA_LVDS
B41
VSSA_LVDS
K50
VCCA_PEG_BG
K49
VSSA_PEG_BG
U51
VCCA_PEG_PLL
AW18
VCCA_SM_1
AV19
VCCA_SM_2
AU19
VCCA_SM_3
AU18
VCCA_SM_4
AU17
VCCA_SM_5
AT22
VCCA_SM_7
AT21
VCCA_SM_8
AT19
VCCA_SM_9
AT18
VCCA_SM_10
AT17
VCCA_SM_11
AR17
VCCA_SM_NCTF_1
AR16
VCCA_SM_NCTF_2
BC29
VCCA_SM_CK_1
BB29
VCCA_SM_CK_2
C25
VCCA_TVA_DAC_1
B25
VCCA_TVA_DAC_2
C27
VCCA_TVB_DAC_1
B27
VCCA_TVB_DAC_2
B28
VCCA_TVC_DAC_1
A28
VCCA_TVC_DAC_2
M32
VCCD_CRT
L29
VCCD_TVDAC
N28
VCCD_QDAC
AN2
VCCD_HPLL
U48
VCCD_PEG_PLL
J41
VCCD_LVDS_1
H42
VCCD_LVDS_2
ITL_CRESTLINE_DIS_FCBGA_1299P
POWER
VTT_1 U13
VTT_2 U12
VTT_3 U11
VTT_4 U9
VTT_5 U8
VTT_6 U7
VTT_7 U5
VTT_8 U3
VTT_9 U2
VTT_10 U1
VTT_11 T13
VTT_12 T11
VTT_13 T10
VTT_14 T9
VTT_15 T7
VTT_16 T6
VTT_17 T5
VTT_18 T3
VTT_19 T2
VTT_20 R3
VTT_21 R2
VTT_22 R1
VCC_AXD_1 AT23
VCC_AXD_2 AU28
VCC_AXD_3 AU24
VCC_AXD_4 AT29
VCC_AXD_5 AT25
VCC_AXD_6 AT30
VCC_AXD_NCTF AR29
VCC_AXF_1 B23
VCC_AXF_2 B21
VCC_AXF_3 A21
VCC_DMI AJ50
VCC_SM_CK_1 BK24
VCC_SM_CK_2 BK23
VCC_SM_CK_3 BJ24
VCC_SM_CK_4 BJ23
VCC_TX_LVDS A43
VCC_HV_1 C40
VCC_HV_2 B40
VCC_PEG_1 AD51
VCC_PEG_2 W50
VCC_PEG_3 W51
VCC_PEG_4 V49
VCC_PEG_5 V50
VCC_RXR_DMI_1 AH50
VCC_RXR_DMI_2 AH51
VTTLF1 A7
VTTLF2 F2
VTTLF3 AH1
+V1.25S
8-,10-,20-,24-,34-
L509
BLM11A121S
C583
22uF_6.3v
C585
0.1uF_16v
L532
BLM11A121S
C582
22uF_6.3v
C584
0.1uF_16v
L7
BLM18PG121SN1
C270
0.1uF_16v
11-,13-,14-,15-,19-,20-,24-,26-,27-,29-,30-,31-,32-,33-,34-,39-,41-,42-,43-,45-,46-,47-,48-,50-,51-
+V3S
C673
0.1uF_16v
+V1.25S_PEGPLL
24-
+V1.25S
8-,10-,20-,24-,34-
C94
47uF_6.3V
C93
22uF_6.3v
C132
4.7uF_6.3v
C92
22uF_6.3v
C138
1uF_6.3v
+V1.25S
8-,10-,20-,24-,34-
C91
47uF_6.3V
C134
1uF_6.3v
C136
1uF_6.3v
C111
22uF_6.3v
C110
0.1uF_16v
+V1.5S
10-,13-,18-,34-,45-,46-
C223
10uF_6.3v
C225
0.1uF_16v
C224
0.022uF_16v
+V1.25S
8-,10-,20-,24-,34-
C586
0.1uF_16v
+V1.25S_PEGPLL
24-
C182
0.1uF_16v
+V1.25S
8-,10-,20-,24-,34-
C135
1uF_10v
C133
22uF_6.3v
+V1.25S
8-,10-,20-,24-,34-
C269
1uF_10v
C670
10uF_6.3v
+V1.25S
8-,10-,20-,24-,34-
C587
0.1uF_16v
+V1.8
8-,9-,10-,12-,13-,20-,23-,26-,27-
C557
0.1uF_16v
C556
22uF_6.3v
11-,13-,14-,15-,19-,20-,24-,26-,27-,29-,30-,31-,32-,33-,34-,39-,41-,42-,43-,45-,46-,47-,48-,50-,51-
+V3S
R252
10_5%
C226
0.1uF_16v
D14
CHENMKO_BAT54_3P
+VCCP
10-,11-,15-,16-,17-,18-,19-,21-,23-,24-,31-,34-
C175
0.47uF_6.3v
C647
0.47uF_6.3v
C667
0.47uF_6.3v
C675
10uF_6.3v
C272
220uF_2.5v
C273
220uF_2.5v
+VCC_PEG
21-
+V1.25S
8-,10-,20-,24-,34-
R614
0_5%_OPEN
10-,11-,15-,16-,17-,18-,19-,21-,23-,24-,31-,34-
+VCCP
R613
0_5%

INVENTEC

TITLE
VV Discrete
Cresline-5

SIZE	CODE	DOC. NUMBER	REV
A3	CS	1310A22294-0-MTR	A01

CHANGE by Chang, Roger 27-Nov-2008
SHEET 24 OF 54

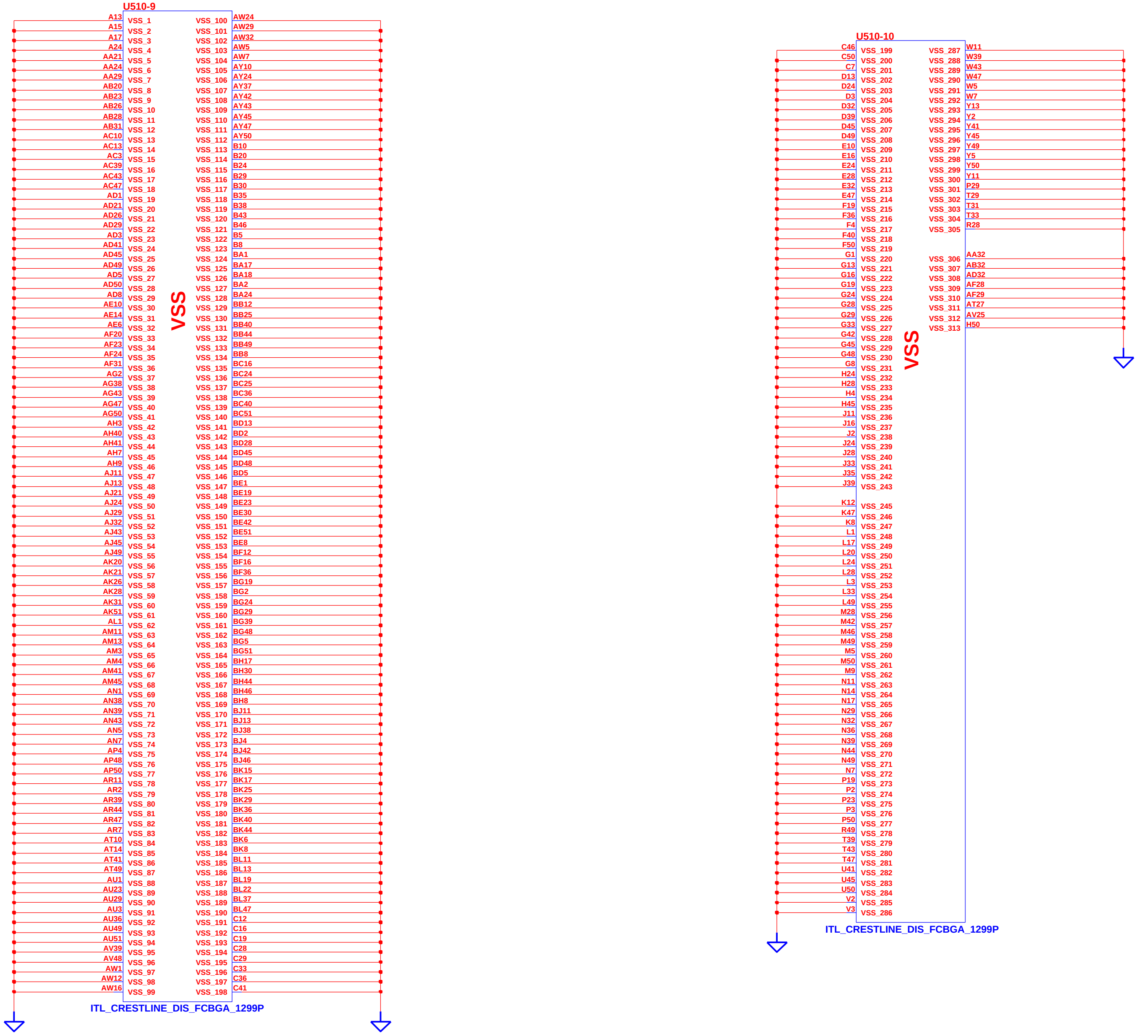
U510-9
VSS
A13 VSS_1
A15 VSS_2
A17 VSS_3
A24 VSS_4
AA21 VSS_5
AA24 VSS_6
AA29 VSS_7
AB20 VSS_8
AB23 VSS_9
AB26 VSS_10
AB28 VSS_11
AB31 VSS_12
AC10 VSS_13
AC13 VSS_14
AC3 VSS_15
AC39 VSS_16
AC43 VSS_17
AC47 VSS_18
AD1 VSS_19
AD21 VSS_20
AD26 VSS_21
AD29 VSS_22
AD3 VSS_23
AD41 VSS_24
AD45 VSS_25
AD49 VSS_26
AD5 VSS_27
AD50 VSS_28
AD8 VSS_29
AE10 VSS_30
AE14 VSS_31
AE6 VSS_32
AF20 VSS_33
AF23 VSS_34
AF24 VSS_35
AF31 VSS_36
AG2 VSS_37
AG38 VSS_38
AG43 VSS_39
AG47 VSS_40
AG50 VSS_41
AH3 VSS_42
AH40 VSS_43
AH41 VSS_44
AH7 VSS_45
AH9 VSS_46
AJ11 VSS_47
AJ13 VSS_48
AJ21 VSS_49
AJ24 VSS_50
AJ29 VSS_51
AJ32 VSS_52
AJ43 VSS_53
AJ45 VSS_54
AJ49 VSS_55
AK20 VSS_56
AK21 VSS_57
AK26 VSS_58
AK28 VSS_59
AK31 VSS_60
AK51 VSS_61
AL1 VSS_62
AM11 VSS_63
AM13 VSS_64
AM3 VSS_65
AM4 VSS_66
AM41 VSS_67
AM45 VSS_68
AN1 VSS_69
AN38 VSS_70
AN39 VSS_71
AN43 VSS_72
AN5 VSS_73
AN7 VSS_74
AP4 VSS_75
AP48 VSS_76
AP50 VSS_77
AR11 VSS_78
AR2 VSS_79
AR39 VSS_80
AR44 VSS_81
AR47 VSS_82
AR7 VSS_83
AT10 VSS_84
AT14 VSS_85
AT41 VSS_86
AT49 VSS_87
AU1 VSS_88
AU23 VSS_89
AU29 VSS_90
AU3 VSS_91
AU36 VSS_92
AU49 VSS_93
AU51 VSS_94
AV39 VSS_95
AV48 VSS_96
AW1 VSS_97
AW12 VSS_98
AW16 VSS_99
VSS_100 AW24
VSS_101 AW29
VSS_102 AW32
VSS_103 AW5
VSS_104 AW7
VSS_105 AY10
VSS_106 AY24
VSS_107 AY37
VSS_108 AY42
VSS_109 AY43
VSS_110 AY45
VSS_111 AY47
VSS_112 AY50
VSS_113 B10
VSS_114 B20
VSS_115 B24
VSS_116 B29
VSS_117 B30
VSS_118 B35
VSS_119 B38
VSS_120 B43
VSS_121 B46
VSS_122 B5
VSS_123 B8
VSS_124 BA1
VSS_125 BA17
VSS_126 BA18
VSS_127 BA2
VSS_128 BA24
VSS_129 BB12
VSS_130 BB25
VSS_131 BB40
VSS_132 BB44
VSS_133 BB49
VSS_134 BB8
VSS_135 BC16
VSS_136 BC24
VSS_137 BC25
VSS_138 BC36
VSS_139 BC40
VSS_140 BC51
VSS_141 BD13
VSS_142 BD2
VSS_143 BD28
VSS_144 BD45
VSS_145 BD48
VSS_146 BD5
VSS_147 BE1
VSS_148 BE19
VSS_149 BE23
VSS_150 BE30
VSS_151 BE42
VSS_152 BE51
VSS_153 BE8
VSS_154 BF12
VSS_155 BF16
VSS_156 BF36
VSS_157 BG19
VSS_158 BG2
VSS_159 BG24
VSS_160 BG29
VSS_161 BG39
VSS_162 BG48
VSS_163 BG5
VSS_164 BG51
VSS_165 BH17
VSS_166 BH30
VSS_167 BH44
VSS_168 BH46
VSS_169 BH8
VSS_170 BJ11
VSS_171 BJ13
VSS_172 BJ38
VSS_173 BJ4
VSS_174 BJ42
VSS_175 BJ46
VSS_176 BK15
VSS_177 BK17
VSS_178 BK25
VSS_179 BK29
VSS_180 BK36
VSS_181 BK40
VSS_182 BK44
VSS_183 BK6
VSS_184 BK8
VSS_185 BL11
VSS_186 BL13
VSS_187 BL19
VSS_188 BL22
VSS_189 BL37
VSS_190 BL47
VSS_191 C12
VSS_192 C16
VSS_193 C19
VSS_194 C28
VSS_195 C29
VSS_196 C33
VSS_197 C36
VSS_198 C41
ITL_CRESTLINE_DIS_FCBGA_1299P
U510-10
VSS
C46 VSS_199
C50 VSS_200
C7 VSS_201
D13 VSS_202
D24 VSS_203
D3 VSS_204
D32 VSS_205
D39 VSS_206
D45 VSS_207
D49 VSS_208
E10 VSS_209
E16 VSS_210
E24 VSS_211
E28 VSS_212
E32 VSS_213
E47 VSS_214
F19 VSS_215
F36 VSS_216
F4 VSS_217
F40 VSS_218
F50 VSS_219
G1 VSS_220
G13 VSS_221
G16 VSS_222
G19 VSS_223
G24 VSS_224
G28 VSS_225
G29 VSS_226
G33 VSS_227
G42 VSS_228
G45 VSS_229
G48 VSS_230
G8 VSS_231
H24 VSS_232
H28 VSS_233
H4 VSS_234
H45 VSS_235
J11 VSS_236
J16 VSS_237
J2 VSS_238
J24 VSS_239
J28 VSS_240
J33 VSS_241
J35 VSS_242
J39 VSS_243
K12 VSS_245
K47 VSS_246
K8 VSS_247
L1 VSS_248
L17 VSS_249
L20 VSS_250
L24 VSS_251
L28 VSS_252
L3 VSS_253
L33 VSS_254
L49 VSS_255
M28 VSS_256
M42 VSS_257
M46 VSS_258
M49 VSS_259
M5 VSS_260
M50 VSS_261
M9 VSS_262
N11 VSS_263
N14 VSS_264
N17 VSS_265
N29 VSS_266
N32 VSS_267
N36 VSS_268
N39 VSS_269
N44 VSS_270
N49 VSS_271
N7 VSS_272
P19 VSS_273
P2 VSS_274
P23 VSS_275
P3 VSS_276
P50 VSS_277
R49 VSS_278
T39 VSS_279
T43 VSS_280
T47 VSS_281
U41 VSS_282
U45 VSS_283
U50 VSS_284
V2 VSS_285
V3 VSS_286
VSS_287 W11
VSS_288 W39
VSS_289 W43
VSS_290 W47
VSS_291 W5
VSS_292 W7
VSS_293 Y13
VSS_294 Y2
VSS_295 Y41
VSS_296 Y45
VSS_297 Y49
VSS_298 Y5
VSS_299 Y50
VSS_300 Y11
VSS_301 P29
VSS_302 T29
VSS_303 T31
VSS_304 T33
VSS_305 R28
VSS_306 AA32
VSS_307 AB32
VSS_308 AD32
VSS_309 AF28
VSS_310 AF29
VSS_311 AT27
VSS_312 AV25
VSS_313 H50
ITL_CRESTLINE_DIS_FCBGA_1299P

INVENTEC

TITLE **VV Discrete**
CRESTLINE-6

SIZE	CODE	DOC. NUMBER	REV
A3	CS	1310A22294-0-MTR	A01

CHANGE by *Chang, Roger* *27-Nov-2008*

SHEET 25 OF 54

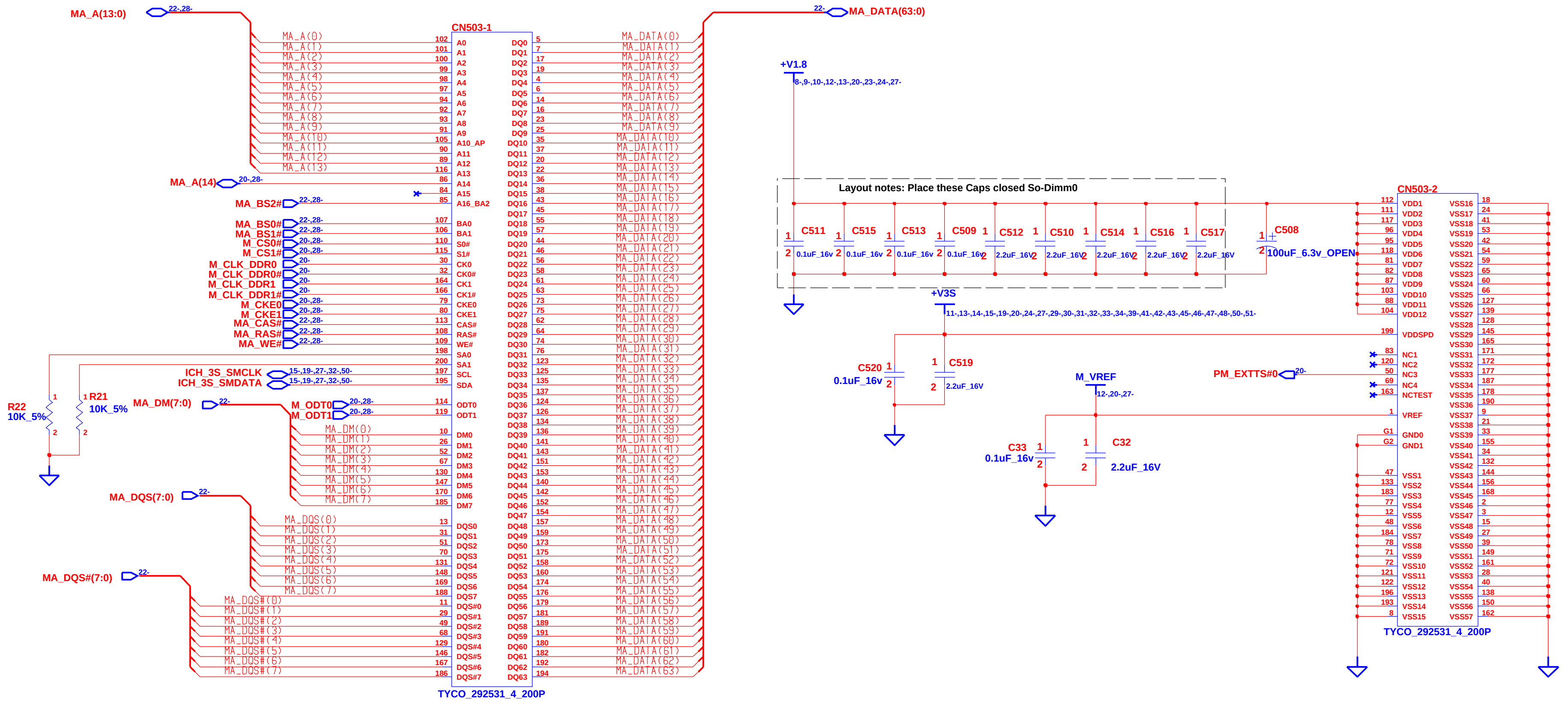
MA_A(13:0)
22-,28-
MA_A(14)
20-,28-
MA_BS2#
MA_BS0#
MA_BS1#
M_CS0#
M_CS1#
M_CLK_DDR0
M_CLK_DDR0#
M_CLK_DDR1
M_CLK_DDR1#
M_CKE0
M_CKE1
MA_CAS#
MA_RAS#
MA_WE#
ICH_3S_SMCLK
ICH_3S_SMDATA
15-,19-,27-,32-,50-
R22
10K_5%
R21
10K_5%
MA_DM(7:0)
M_ODT0
M_ODT1
MA_DQS(7:0)
MA_DQS#(7:0)
CN503-1
A0
A1
A2
A3
A4
A5
A6
A7
A8
A9
A10_AP
A11
A12
A13
A14
A15
A16_BA2
BA0
BA1
S0#
S1#
CK0
CK0#
CK1
CK1#
CKE0
CKE1
CAS#
RAS#
WE#
SA0
SA1
SCL
SDA
ODT0
ODT1
DM0
DM1
DM2
DM3
DM4
DM5
DM6
DM7
DQS0
DQS1
DQS2
DQS3
DQS4
DQS5
DQS6
DQS7
DQS#0
DQS#1
DQS#2
DQS#3
DQS#4
DQS#5
DQS#6
DQS#7
DQ0 … DQ63
TYCO_292531_4_200P
MA_DATA(63:0)
22-
+V1.8
8-,9-,10-,12-,13-,20-,23-,24-,27-
Layout notes: Place these Caps closed So-Dimm0
C511
C515
C513
C509
C512
C510
C514
C516
C517
C508
0.1uF_16v
2.2uF_16V
100uF_6.3v_OPEN
+V3S
11-,13-,14-,15-,19-,20-,24-,27-,29-,30-,31-,32-,33-,34-,39-,41-,42-,43-,45-,46-,47-,48-,50-,51-
C520
0.1uF_16v
C519
2.2uF_16V
M_VREF
12-,20-,27-
C33
0.1uF_16v
C32
2.2uF_16V
PM_EXTTS#0
20-
CN503-2
VDD1 … VDD12
VDDSPD
NC1
NC2
NC3
NC4
NCTEST
VREF
GND0
GND1
VSS1 … VSS57
TYCO_292531_4_200P

SO DIMM0_9.2mm

INVENTEC

TITLE
VV Discrete
DDR2-DIMM-0

SIZE	CODE	DOC. NUMBER	REV
A3	CS	1310A22294-0-MTR	A01

CHANGE by Chang, Roger 25-Nov-2008 SHEET 26 OF 54

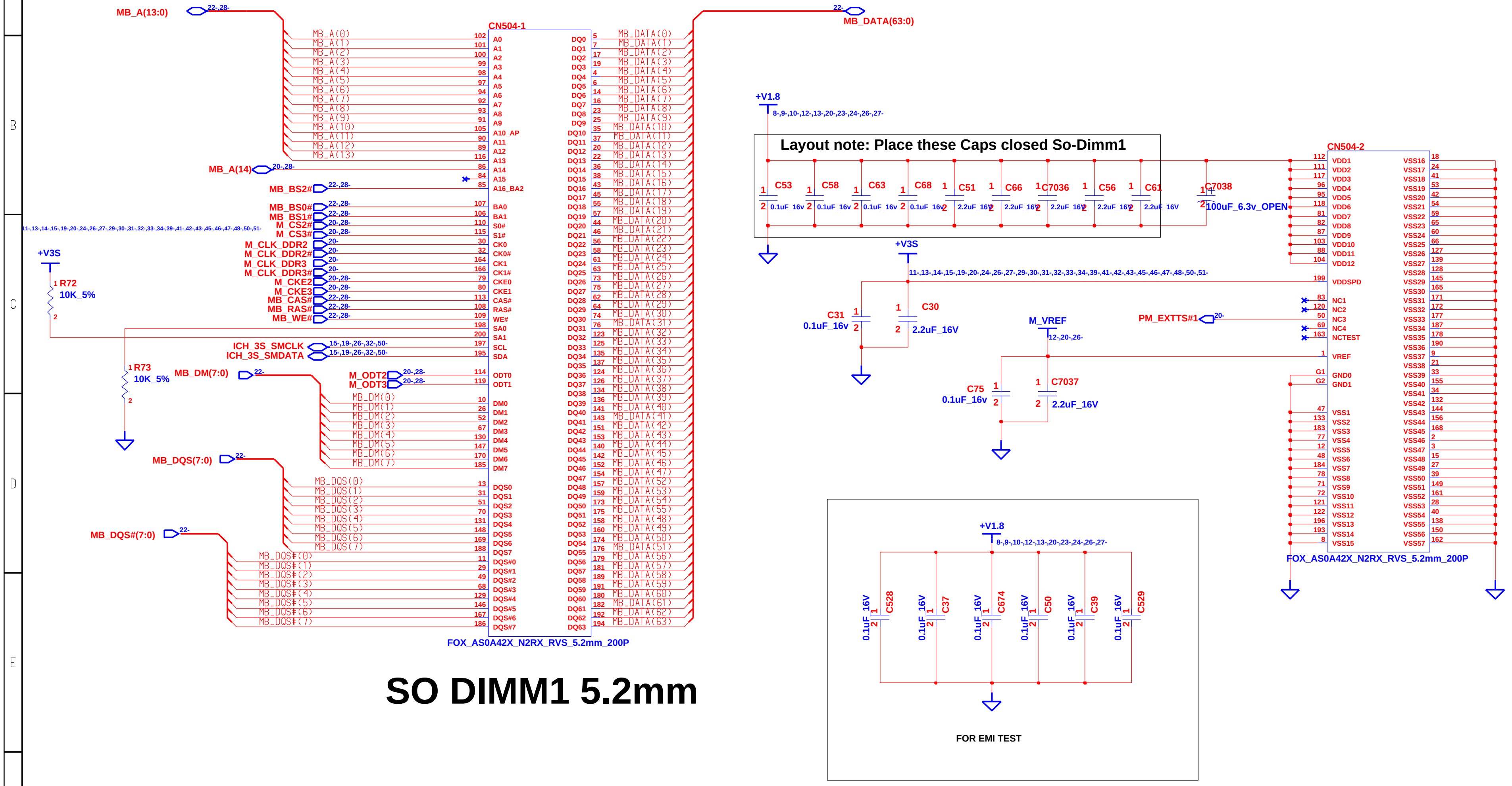
MB_A(13:0)
MB_A(14)
MB_BS2#
MB_BS0#
MB_BS1#
M_CS2#
M_CS3#
M_CLK_DDR2
M_CLK_DDR2#
M_CLK_DDR3
M_CLK_DDR3#
M_CKE2
M_CKE3
MB_CAS#
MB_RAS#
MB_WE#
ICH_3S_SMCLK
ICH_3S_SMDATA
M_ODT2
M_ODT3
MB_DM(7:0)
MB_DQS(7:0)
MB_DQS#(7:0)
+V3S
R72
10K_5%
R73
10K_5%
CN504-1
FOX_AS0A42X_N2RX_RVS_5.2mm_200P
MB_DATA(63:0)
+V1.8
Layout note: Place these Caps closed So-Dimm1
C53
C58
C63
C68
C51
C66
C7036
C56
C61
C7038
0.1uF_16v
2.2uF_16V
100uF_6.3v_OPEN
+V3S
C31
0.1uF_16v
C30
2.2uF_16V
M_VREF
C75
0.1uF_16v
C7037
2.2uF_16V
PM_EXTTS#1
CN504-2
FOX_AS0A42X_N2RX_RVS_5.2mm_200P
VDDSPD
VREF
NCTEST
+V1.8
C528
C37
C674
C50
C39
C529
0.1uF_16V
FOR EMI TEST

SO DIMM1 5.2mm

INVENTEC

TITLE *VV Discrete*
DDR2-DIMM1

SIZE	CODE	DOC. NUMBER	REV
A3	CS	1310A22294-0-MTR	A01

CHANGE by *Chang, Roger* *18-Nov-2008*

SHEET 27 OF 54

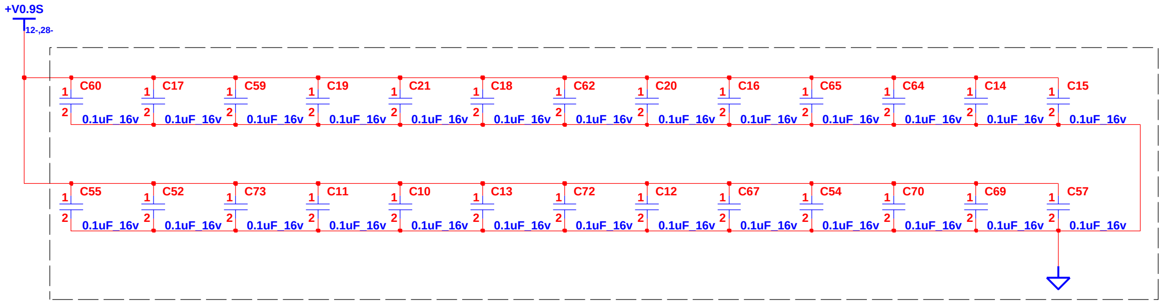
+V0.9S
12-,28-
C60 C17 C59 C19 C21 C18 C62 C20 C16 C65 C64 C14 C15
0.1uF 16v
C55 C52 C73 C11 C10 C13 C72 C12 C67 C54 C70 C69 C57
0.1uF 16v
1
2

LAYOUT NOTES : PLACE ONE CAP CLOSE TO EVERY 2 PULL UP RESISTOR TERMINATED TO +V0.9S

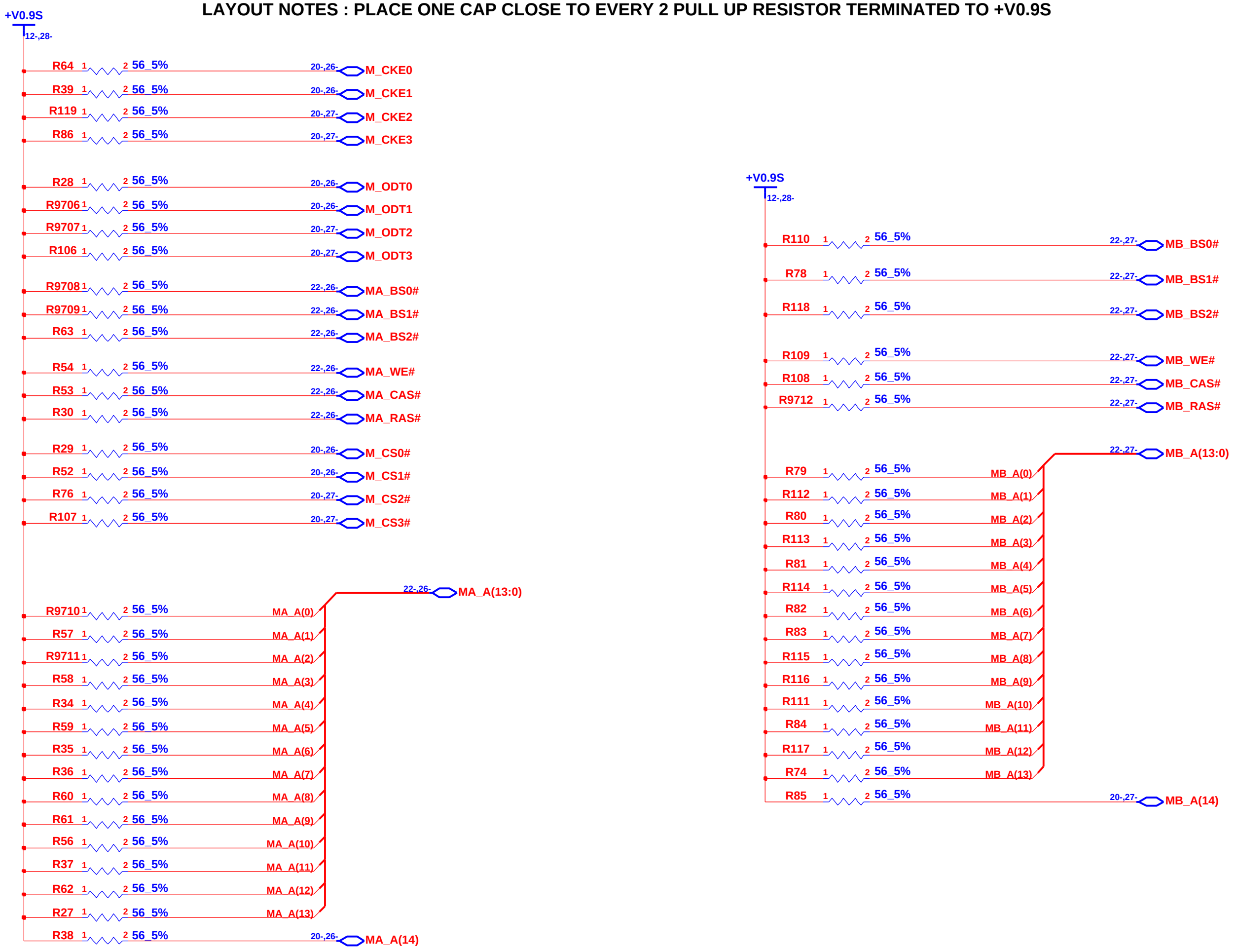
+V0.9S
12-,28-
R64 56_5% 20-,26- M_CKE0
R39 56_5% 20-,26- M_CKE1
R119 56_5% 20-,27- M_CKE2
R86 56_5% 20-,27- M_CKE3
R28 56_5% 20-,26- M_ODT0
R9706 56_5% 20-,26- M_ODT1
R9707 56_5% 20-,27- M_ODT2
R106 56_5% 20-,27- M_ODT3
R9708 56_5% 22-,26- MA_BS0#
R9709 56_5% 22-,26- MA_BS1#
R63 56_5% 22-,26- MA_BS2#
R54 56_5% 22-,26- MA_WE#
R53 56_5% 22-,26- MA_CAS#
R30 56_5% 22-,26- MA_RAS#
R29 56_5% 20-,26- M_CS0#
R52 56_5% 20-,26- M_CS1#
R76 56_5% 20-,27- M_CS2#
R107 56_5% 20-,27- M_CS3#
22-,26- MA_A(13:0)
R9710 56_5% MA_A(0)
R57 56_5% MA_A(1)
R9711 56_5% MA_A(2)
R58 56_5% MA_A(3)
R34 56_5% MA_A(4)
R59 56_5% MA_A(5)
R35 56_5% MA_A(6)
R36 56_5% MA_A(7)
R60 56_5% MA_A(8)
R61 56_5% MA_A(9)
R56 56_5% MA_A(10)
R37 56_5% MA_A(11)
R62 56_5% MA_A(12)
R27 56_5% MA_A(13)
R38 56_5% 20-,26- MA_A(14)
+V0.9S
12-,28-
R110 56_5% 22-,27- MB_BS0#
R78 56_5% 22-,27- MB_BS1#
R118 56_5% 22-,27- MB_BS2#
R109 56_5% 22-,27- MB_WE#
R108 56_5% 22-,27- MB_CAS#
R9712 56_5% 22-,27- MB_RAS#
22-,27- MB_A(13:0)
R79 56_5% MB_A(0)
R112 56_5% MB_A(1)
R80 56_5% MB_A(2)
R113 56_5% MB_A(3)
R81 56_5% MB_A(4)
R114 56_5% MB_A(5)
R82 56_5% MB_A(6)
R83 56_5% MB_A(7)
R115 56_5% MB_A(8)
R116 56_5% MB_A(9)
R111 56_5% MB_A(10)
R84 56_5% MB_A(11)
R117 56_5% MB_A(12)
R74 56_5% MB_A(13)
R85 56_5% 20-,27- MB_A(14)
1
2

INVENTEC

TITLE *VV Discrete*
DDR2-DAMPING

SIZE	CODE	DOC. NUMBER	REV
A3	CS	1310A22294-0-MTR	A01

CHANGE by *Chang, Roger* 27-Sep-2003

SHEET 28 OF 54

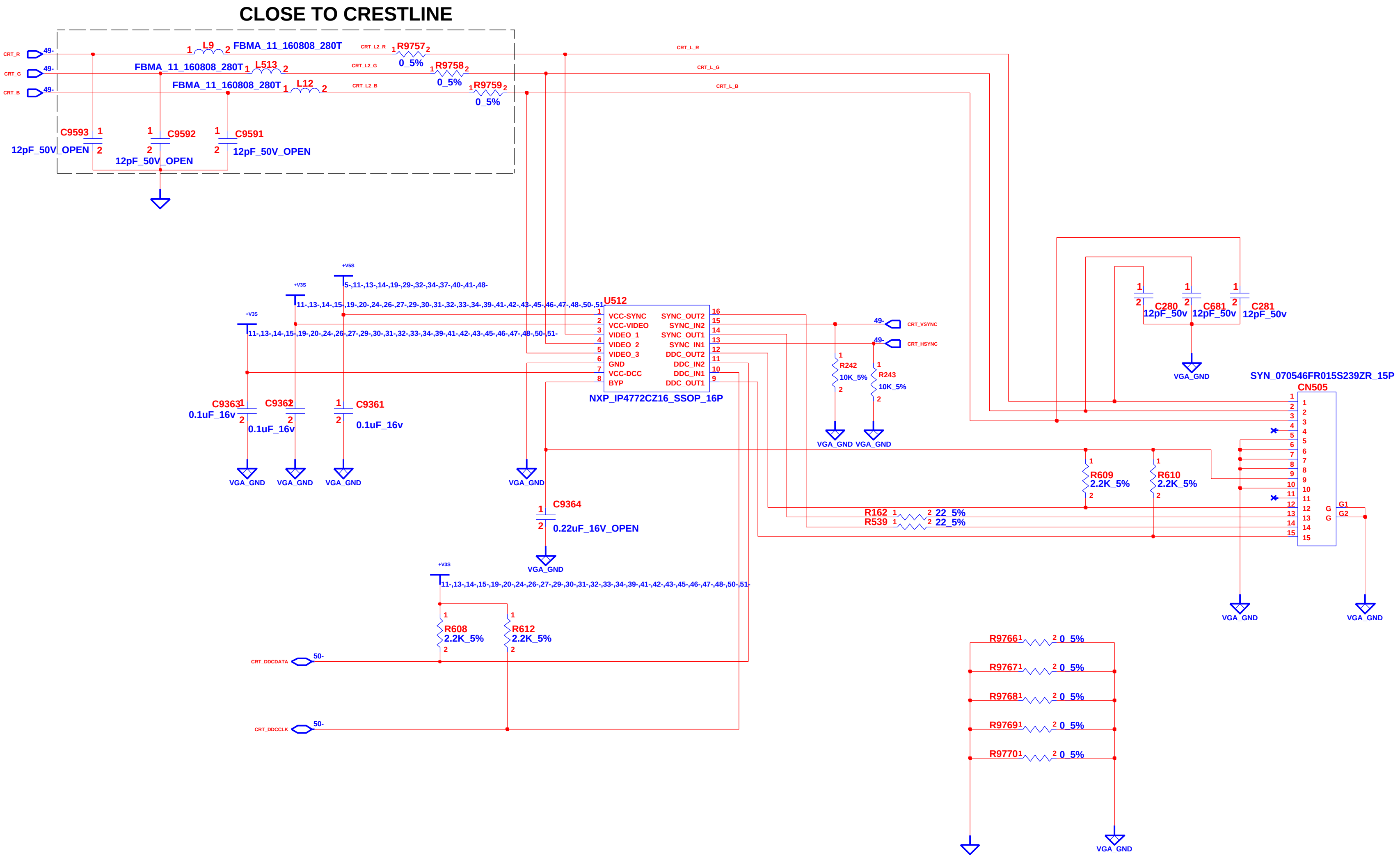
CLOSE TO CRESTLINE
CRT_R 49-
CRT_G 49-
CRT_B 49-
L9 FBMA_11_160808_280T
L513 FBMA_11_160808_280T
L12 FBMA_11_160808_280T
CRT_L2_R
CRT_L2_G
CRT_L2_B
R9757 0_5%
R9758 0_5%
R9759 0_5%
C9593 12pF_50V_OPEN
C9592 12pF_50V_OPEN
C9591 12pF_50V_OPEN
CRT_L_R
CRT_L_G
CRT_L_B
+V5S
5-,11-,13-,14-,19-,29-,32-,34-,37-,40-,41-,48-
+V3S
11-,13-,14-,15-,19-,20-,24-,26-,27-,29-,30-,31-,32-,33-,34-,39-,41-,42-,43-,45-,46-,47-,48-,50-,51-
+V3S
11-,13-,14-,15-,19-,20-,24-,26-,27-,29-,30-,31-,32-,33-,34-,39-,41-,42-,43-,45-,46-,47-,48-,50-,51-
U512
VCC-SYNC
VCC-VIDEO
VIDEO_1
VIDEO_2
VIDEO_3
GND
VCC-DCC
BYP
SYNC_OUT2
SYNC_IN2
SYNC_OUT1
SYNC_IN1
DDC_OUT2
DDC_IN2
DDC_IN1
DDC_OUT1
NXP_IP4772CZ16_SSOP_16P
C9363 0.1uF_16v
C9362 0.1uF_16v
C9361 0.1uF_16v
VGA_GND
C9364 0.22uF_16V_OPEN
CRT_VSYNC 49-
CRT_HSYNC 49-
R242 10K_5%
R243 10K_5%
C280 12pF_50v
C681 12pF_50v
C281 12pF_50v
SYN_070546FR015S239ZR_15P
CN505
G1
G2
R609 2.2K_5%
R610 2.2K_5%
R162 22_5%
R539 22_5%
+V3S
11-,13-,14-,15-,19-,20-,24-,26-,27-,29-,30-,31-,32-,33-,34-,39-,41-,42-,43-,45-,46-,47-,48-,50-,51-
R608 2.2K_5%
R612 2.2K_5%
CRT_DDCDATA 50-
CRT_DDCCLK 50-
R9766 0_5%
R9767 0_5%
R9768 0_5%
R9769 0_5%
R9770 0_5%

INVENTEC

TITLE **VV Discrete**
VGA CONN

SIZE	CODE	DOC. NUMBER	REV
A3	CS	1310A22294-0-MTR	A01

CHANGE by **Chang, Roger** **25-Dec-2008** SHEET **29** OF **54**

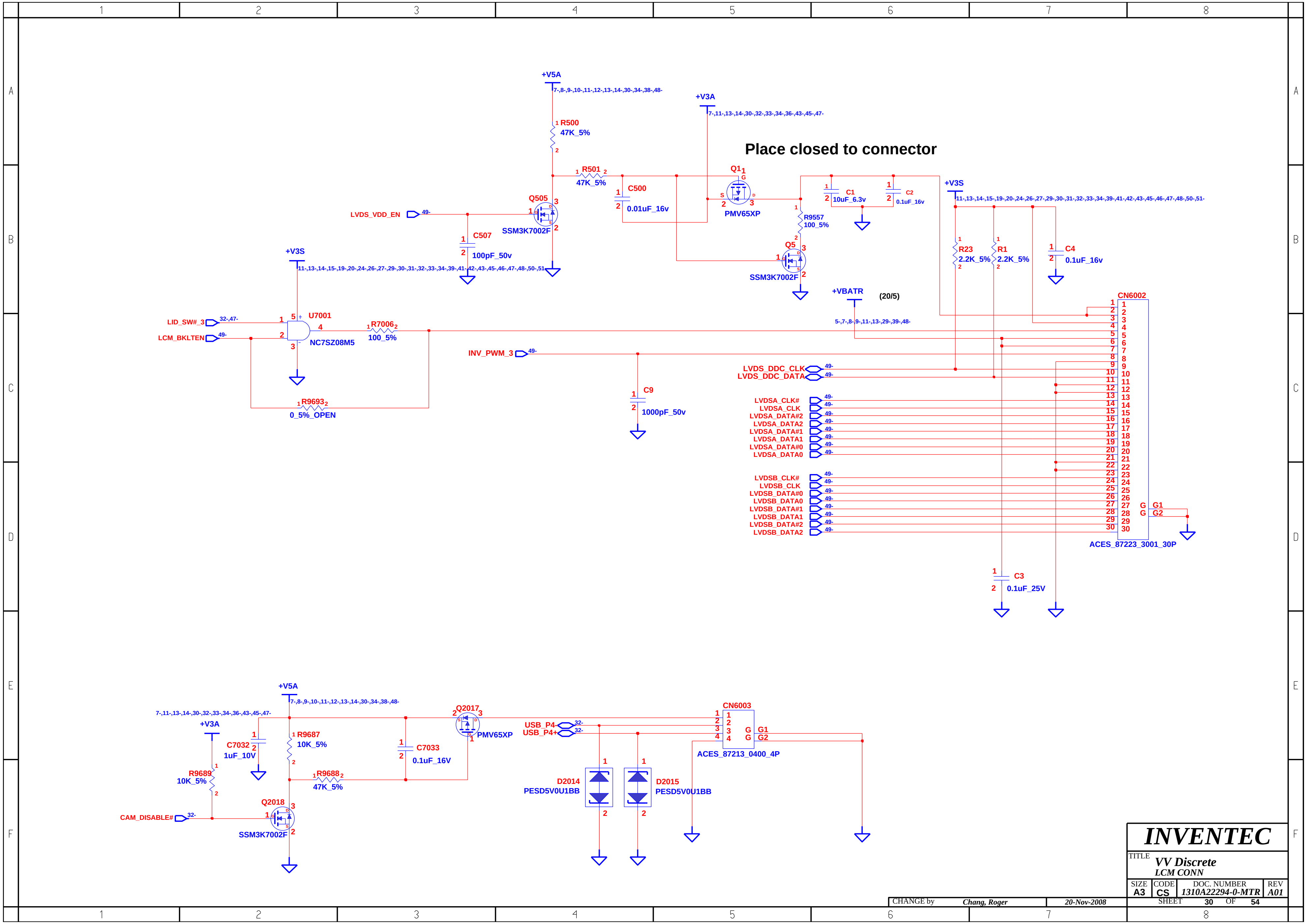

Place closed to connector
+V5A
7-,8-,9-,10-,11-,12-,13-,14-,30-,34-,38-,48-
+V3A
7-,11-,13-,14-,30-,32-,33-,34-,36-,43-,45-,47-
R500
47K_5%
R501
47K_5%
C500
0.01uF_16v
Q1
PMV65XP
C1
10uF_6.3v
C2
0.1uF_16v
+V3S
11-,13-,14-,15-,19-,20-,24-,26-,27-,29-,30-,31-,32-,33-,34-,39-,41-,42-,43-,45-,46-,47-,48-,50-,51-
Q505
SSM3K7002F
LVDS_VDD_EN
49-
C507
100pF_50v
R9557
100_5%
Q5
SSM3K7002F
R23
2.2K_5%
R1
2.2K_5%
C4
0.1uF_16v
+V3S
11-,13-,14-,15-,19-,20-,24-,26-,27-,29-,30-,31-,32-,33-,34-,39-,41-,42-,43-,45-,46-,47-,48-,50-,51-
+VBATR
(20/5)
5-,7-,8-,9-,11-,13-,29-,39-,48-
CN6002
LID_SW#_3
32-,47-
LCM_BKLTEN
49-
U7001
NC7SZ08M5
R7006
100_5%
R9693
0_5%_OPEN
INV_PWM_3
49-
C9
1000pF_50v
LVDS_DDC_CLK
LVDS_DDC_DATA
LVDSA_CLK#
LVDSA_CLK
LVDSA_DATA#2
LVDSA_DATA2
LVDSA_DATA#1
LVDSA_DATA1
LVDSA_DATA#0
LVDSA_DATA0
LVDSB_CLK#
LVDSB_CLK
LVDSB_DATA#0
LVDSB_DATA0
LVDSB_DATA#1
LVDSB_DATA1
LVDSB_DATA#2
LVDSB_DATA2
G1
G2
ACES_87223_3001_30P
C3
0.1uF_25V
+V5A
7-,8-,9-,10-,11-,12-,13-,14-,30-,34-,38-,48-
7-,11-,13-,14-,30-,32-,33-,34-,36-,43-,45-,47-
+V3A
C7032
1uF_10V
R9687
10K_5%
R9688
47K_5%
Q2017
PMV65XP
C7033
0.1uF_16V
USB_P4-
USB_P4+
32-
CN6003
ACES_87213_0400_4P
R9689
10K_5%
CAM_DISABLE#
32-
Q2018
SSM3K7002F
D2014
PESD5V0U1BB
D2015
PESD5V0U1BB

INVENTEC

TITLE
VV Discrete
LCM CONN

SIZE	CODE	DOC. NUMBER	REV
A3	CS	1310A22294-0-MTR	A01

CHANGE by *Chang, Roger* *20-Nov-2008* SHEET 30 OF 54

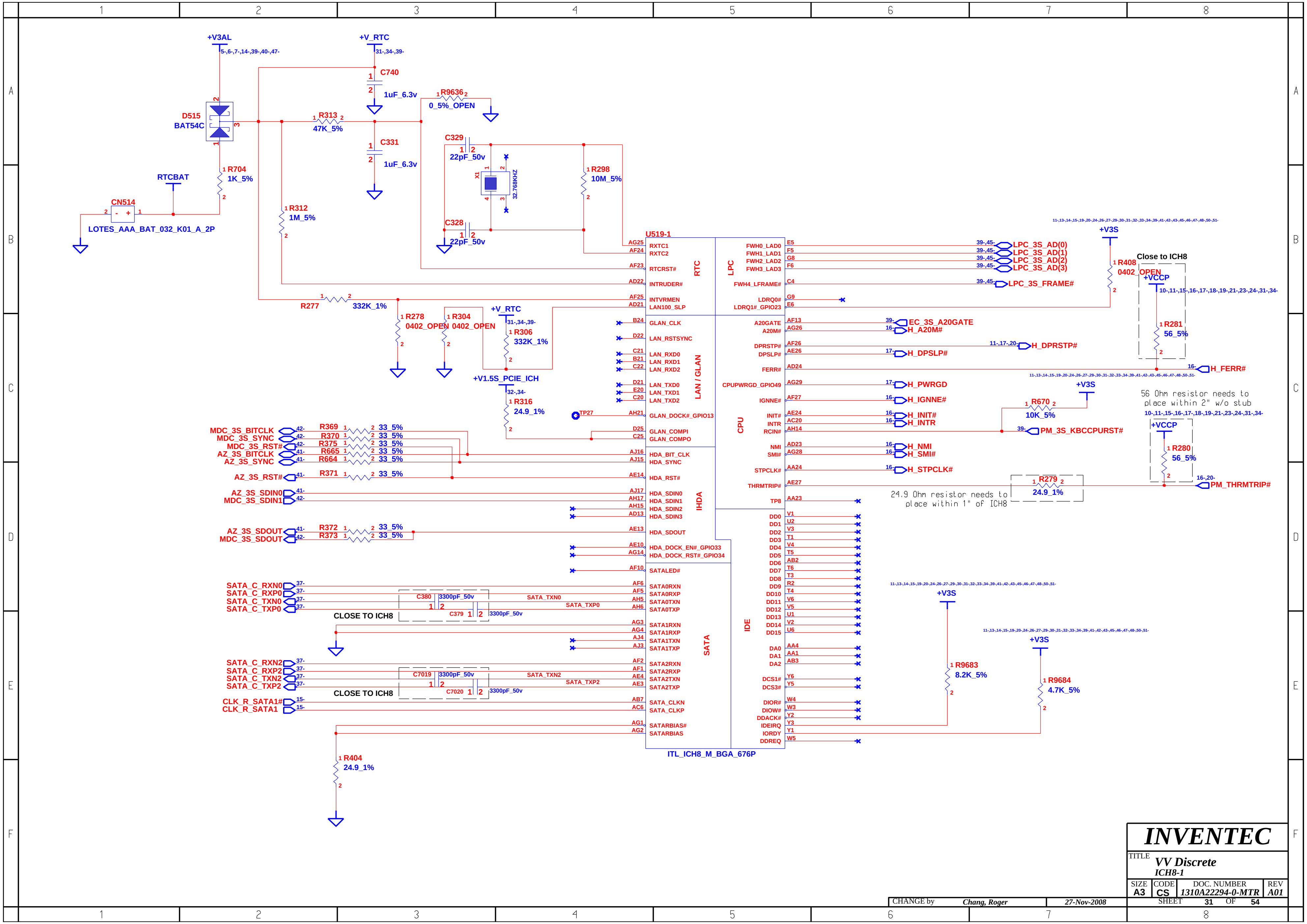

+V3AL
5-,6-,7-,14-,39-,40-,47-
+V_RTC
31-,34-,39-
C740
1uF_6.3v
R9636
0_5%_OPEN
D515
BAT54C
R313
47K_5%
C331
1uF_6.3v
C329
22pF_50v
X1
32.768KHZ
R298
10M_5%
C328
22pF_50v
R704
1K_5%
RTCBAT
CN514
LOTES_AAA_BAT_032_K01_A_2P
R312
1M_5%
U519-1
R277
332K_1%
R278
0402_OPEN
R304
0402_OPEN
R306
332K_1%
+V1.5S_PCIE_ICH
32-,34-
R316
24.9_1%
TP27
RXTC1
RXTC2
RTCRST#
INTRUDER#
INTVRMEN
LAN100_SLP
RTC
GLAN_CLK
LAN_RSTSYNC
LAN_RXD0
LAN_RXD1
LAN_RXD2
LAN_TXD0
LAN_TXD1
LAN_TXD2
GLAN_DOCK#_GPIO13
GLAN_COMPI
GLAN_COMPO
LAN / GLAN
HDA_BIT_CLK
HDA_SYNC
HDA_RST#
HDA_SDIN0
HDA_SDIN1
HDA_SDIN2
HDA_SDIN3
HDA_SDOUT
HDA_DOCK_EN#_GPIO33
HDA_DOCK_RST#_GPIO34
IHDA
SATALED#
SATA0RXN
SATA0RXP
SATA0TXN
SATA0TXP
SATA1RXN
SATA1RXP
SATA1TXN
SATA1TXP
SATA2RXN
SATA2RXP
SATA2TXN
SATA2TXP
SATA_CLKN
SATA_CLKP
SATARBIAS#
SATARBIAS
SATA
ITL_ICH8_M_BGA_676P
FWH0_LAD0
FWH1_LAD1
FWH2_LAD2
FWH3_LAD3
FWH4_LFRAME#
LDRQ0#
LDRQ1#_GPIO23
LPC
A20GATE
A20M#
DPRSTP#
DPSLP#
FERR#
CPUPWRGD_GPIO49
IGNNE#
INIT#
INTR
RCIN#
NMI
SMI#
STPCLK#
THRMTRIP#
TP8
CPU
DD0
DD1
DD2
DD3
DD4
DD5
DD6
DD7
DD8
DD9
DD10
DD11
DD12
DD13
DD14
DD15
DA0
DA1
DA2
DCS1#
DCS3#
DIOR#
DIOW#
DDACK#
IDEIRQ
IORDY
DDREQ
IDE
MDC_3S_BITCLK
MDC_3S_SYNC
MDC_3S_RST#
AZ_3S_BITCLK
AZ_3S_SYNC
AZ_3S_RST#
AZ_3S_SDIN0
MDC_3S_SDIN1
AZ_3S_SDOUT
MDC_3S_SDOUT
R369
R370
R375
R665
R664
R371
R372
R373
33_5%
SATA_C_RXN0
SATA_C_RXP0
SATA_C_TXN0
SATA_C_TXP0
C380
3300pF_50v
C379
SATA_TXN0
SATA_TXP0
CLOSE TO ICH8
SATA_C_RXN2
SATA_C_RXP2
SATA_C_TXN2
SATA_C_TXP2
C7019
C7020
SATA_TXN2
SATA_TXP2
CLK_R_SATA1#
CLK_R_SATA1
R404
24.9_1%
LPC_3S_AD(0)
LPC_3S_AD(1)
LPC_3S_AD(2)
LPC_3S_AD(3)
LPC_3S_FRAME#
+V3S
R408
0402_OPEN
Close to ICH8
+VCCP
10-,11-,15-,16-,17-,18-,19-,21-,23-,24-,31-,34-
R281
56_5%
EC_3S_A20GATE
H_A20M#
H_DPRSTP#
H_DPSLP#
H_FERR#
H_PWRGD
H_IGNNE#
H_INIT#
H_INTR
R670
10K_5%
PM_3S_KBCCPURST#
56 Ohm resistor needs to
place within 2" w/o stub
R280
56_5%
H_NMI
H_SMI#
H_STPCLK#
R279
24.9_1%
PM_THRMTRIP#
24.9 Ohm resistor needs to
place within 1" of ICH8
R9683
8.2K_5%
R9684
4.7K_5%
11-,13-,14-,15-,19-,20-,24-,26-,27-,29-,30-,31-,32-,33-,34-,39-,41-,42-,43-,45-,46-,47-,48-,50-,51-

INVENTEC

TITLE VV Discrete
ICH8-1

SIZE	CODE	DOC. NUMBER	REV
A3	CS	1310A22294-0-MTR	A01

CHANGE by Chang, Roger 27-Nov-2008 SHEET 31 OF 54

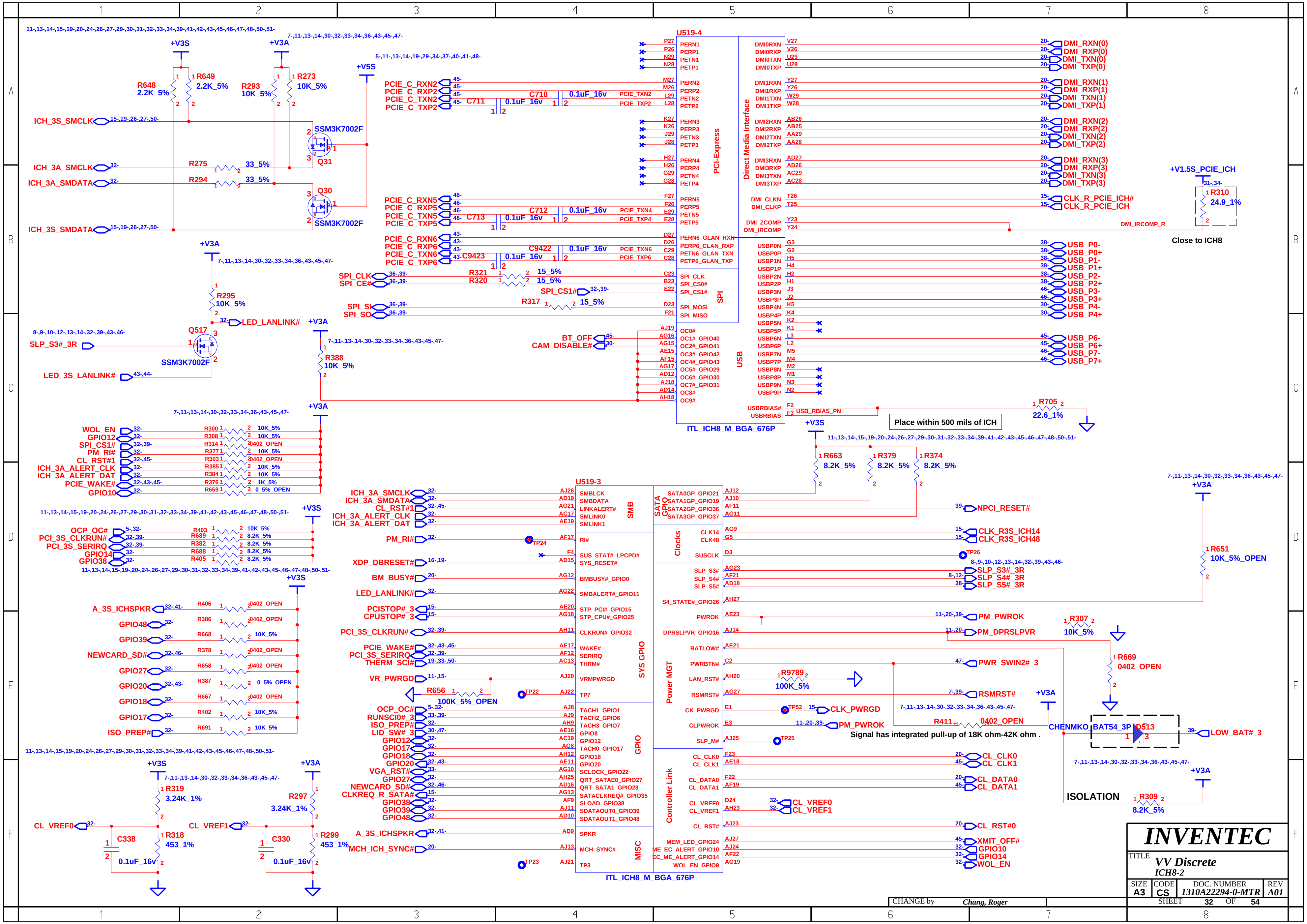
U519-4
ITL_ICH8_M_BGA_676P
PCI-Express
Direct Media Interface
SPI
USB
+V3S
+V3A
+V5S
R648 2.2K_5%
R649 2.2K_5%
R293 10K_5%
R273 10K_5%
ICH_3S_SMCLK
ICH_3A_SMCLK
ICH_3A_SMDATA
ICH_3S_SMDATA
R275 33_5%
R294 33_5%
SSM3K7002F Q31
Q30 SSM3K7002F
PCIE_C_RXN2
PCIE_C_RXP2
PCIE_C_TXN2
PCIE_C_TXP2
C711 0.1uF_16v
C710 0.1uF_16v
PCIE_TXN2
PCIE_TXP2
PCIE_C_RXN5
PCIE_C_RXP5
PCIE_C_TXN5
PCIE_C_TXP5
C713 0.1uF_16v
C712 0.1uF_16v
PCIE_TXN4
PCIE_TXP4
PCIE_C_RXN6
PCIE_C_RXP6
PCIE_C_TXN6
PCIE_C_TXP6
C9423 0.1uF_16v
C9422 0.1uF_16v
PCIE_TXN6
PCIE_TXP6
SPI_CLK
SPI_CE#
R321 15_5%
R320 15_5%
SPI_CS1#
SPI_SI
SPI_SO
R317 15_5%
R295 10K_5%
LED_LANLINK#
Q517 SSM3K7002F
SLP_S3#_3R
LED_3S_LANLINK#
R388 10K_5%
BT_OFF
CAM_DISABLE#
DMI_RXN(0)
DMI_RXP(0)
DMI_TXN(0)
DMI_TXP(0)
DMI_RXN(1)
DMI_RXP(1)
DMI_TXN(1)
DMI_TXP(1)
DMI_RXN(2)
DMI_RXP(2)
DMI_TXN(2)
DMI_TXP(2)
DMI_RXN(3)
DMI_RXP(3)
DMI_TXN(3)
DMI_TXP(3)
CLK_R_PCIE_ICH#
CLK_R_PCIE_ICH
+V1.5S_PCIE_ICH
R310 24.9_1%
DMI_IRCOMP_R
Close to ICH8
USB_P0-
USB_P0+
USB_P1-
USB_P1+
USB_P2-
USB_P2+
USB_P3-
USB_P3+
USB_P4-
USB_P4+
USB_P6-
USB_P6+
USB_P7-
USB_P7+
R705 22.6_1%
USB_RBIAS_PN
Place within 500 mils of ICH
WOL_EN
GPIO12
SPI_CS1#
PM_RI#
CL_RST#1
ICH_3A_ALERT_CLK
ICH_3A_ALERT_DAT
PCIE_WAKE#
GPIO10
R300 10K_5%
R308 10K_5%
R314 0402_OPEN
R377 10K_5%
R303 0402_OPEN
R385 10K_5%
R384 10K_5%
R376 1K_5%
R659 0_5%_OPEN
OCP_OC#
PCI_3S_CLKRUN#
PCI_3S_SERIRQ
GPIO14
GPIO38
R403 10K_5%
R689 8.2K_5%
R382 8.2K_5%
R688 8.2K_5%
R405 8.2K_5%
A_3S_ICHSPKR
GPIO48
GPIO39
NEWCARD_SD#
GPIO27
GPIO20
GPIO18
GPIO17
ISO_PREP#
R406 0402_OPEN
R386 0402_OPEN
R668 10K_5%
R378 0402_OPEN
R658 0402_OPEN
R387 0_5%_OPEN
R667 0402_OPEN
R402 10K_5%
R691 10K_5%
U519-3
ITL_ICH8_M_BGA_676P
SMB
SATA GPIO
Clocks
SYS GPIO
Power MGT
GPIO
Controller Link
MISC
ICH_3A_SMCLK
ICH_3A_SMDATA
CL_RST#1
ICH_3A_ALERT_CLK
ICH_3A_ALERT_DAT
PM_RI#
XDP_DBRESET#
BM_BUSY#
LED_LANLINK#
PCISTOP#_3
CPUSTOP#_3
PCI_3S_CLKRUN#
PCIE_WAKE#
PCI_3S_SERIRQ
THERM_SCI#
VR_PWRGD
R656 100K_5%_OPEN
OCP_OC#
RUNSCI0#_3
ISO_PREP#
LID_SW#_3
GPIO12
GPIO17
GPIO18
GPIO20
VGA_RST#
GPIO27
NEWCARD_SD#
CLKREQ_R_SATA#
GPIO38
GPIO39
GPIO48
A_3S_ICHSPKR
MCH_ICH_SYNC#
TP22
TP23
TP24
TP25
TP26
TP52
R663 8.2K_5%
R379 8.2K_5%
R374 8.2K_5%
NPCI_RESET#
CLK_R3S_ICH14
CLK_R3S_ICH48
SLP_S3#_3R
SLP_S4#_3R
SLP_S5#_3R
R651 10K_5%_OPEN
PM_PWROK
PM_DPRSLPVR
R307 10K_5%
R669 0402_OPEN
PWR_SWIN2#_3
R9789 100K_5%
RSMRST#
CLK_PWRGD
PM_PWROK
R411 0402_OPEN
Signal has integrated pull-up of 18K ohm-42K ohm .
CHENMKO BAT54_3P D513
LOW_BAT#_3
ISOLATION
R309 8.2K_5%
CL_CLK0
CL_CLK1
CL_DATA0
CL_DATA1
CL_VREF0
CL_VREF1
CL_RST#0
XMIT_OFF#
GPIO10
GPIO14
WOL_EN
R319 3.24K_1%
R318 453_1%
C338 0.1uF_16v
R297 3.24K_1%
R299 453_1%
C330 0.1uF_16v
CL_VREF0
CL_VREF1

INVENTEC

TITLE VV Discrete
ICH8-2

SIZE	CODE	DOC. NUMBER	REV
A3	CS	1310A22294-0-MTR	A01

CHANGE by Chang, Roger
SHEET 32 OF 54

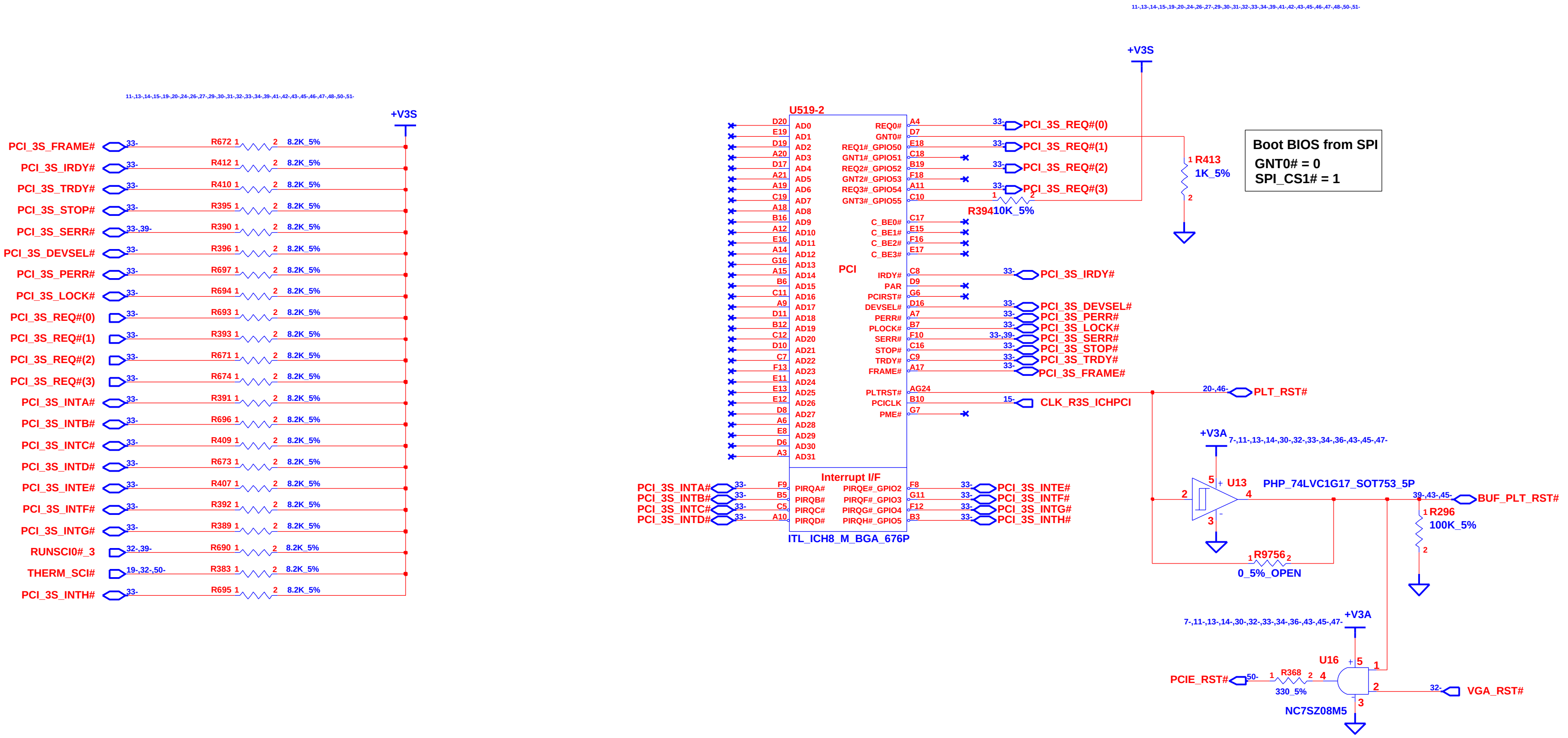

+V3S
PCI_3S_FRAME#
PCI_3S_IRDY#
PCI_3S_TRDY#
PCI_3S_STOP#
PCI_3S_SERR#
PCI_3S_DEVSEL#
PCI_3S_PERR#
PCI_3S_LOCK#
PCI_3S_REQ#(0)
PCI_3S_REQ#(1)
PCI_3S_REQ#(2)
PCI_3S_REQ#(3)
PCI_3S_INTA#
PCI_3S_INTB#
PCI_3S_INTC#
PCI_3S_INTD#
PCI_3S_INTE#
PCI_3S_INTF#
PCI_3S_INTG#
RUNSCI0#_3
THERM_SCI#
PCI_3S_INTH#
R672
R412
R410
R395
R390
R396
R697
R694
R693
R393
R671
R674
R391
R696
R409
R673
R407
R392
R389
R690
R383
R695
8.2K_5%
U519-2
PCI
AD0
AD1
AD2
AD3
AD4
AD5
AD6
AD7
AD8
AD9
AD10
AD11
AD12
AD13
AD14
AD15
AD16
AD17
AD18
AD19
AD20
AD21
AD22
AD23
AD24
AD25
AD26
AD27
AD28
AD29
AD30
AD31
REQ0#
GNT0#
REQ1#_GPIO50
GNT1#_GPIO51
REQ2#_GPIO52
GNT2#_GPIO53
REQ3#_GPIO54
GNT3#_GPIO55
C_BE0#
C_BE1#
C_BE2#
C_BE3#
IRDY#
PAR
PCIRST#
DEVSEL#
PERR#
PLOCK#
SERR#
STOP#
TRDY#
FRAME#
PLTRST#
PCICLK
PME#
Interrupt I/F
PIRQA#
PIRQB#
PIRQC#
PIRQD#
PIRQE#_GPIO2
PIRQF#_GPIO3
PIRQG#_GPIO4
PIRQH#_GPIO5
ITL_ICH8_M_BGA_676P
R413
1K_5%
R394
10K_5%
Boot BIOS from SPI
GNT0# = 0
SPI_CS1# = 1
PLT_RST#
CLK_R3S_ICHPCI
+V3A
U13
PHP_74LVC1G17_SOT753_5P
BUF_PLT_RST#
R296
100K_5%
R9756
0_5%_OPEN
U16
NC7SZ08M5
PCIE_RST#
R368
330_5%
VGA_RST#

INVENTEC

TITLE *VV Discrete*
ICH8-3

SIZE	CODE	DOC. NUMBER	REV
A3	CS	1310A22294-0-MTR	A01

CHANGE by *Chang, Roger* *27-Nov-2008* SHEET 33 OF 54

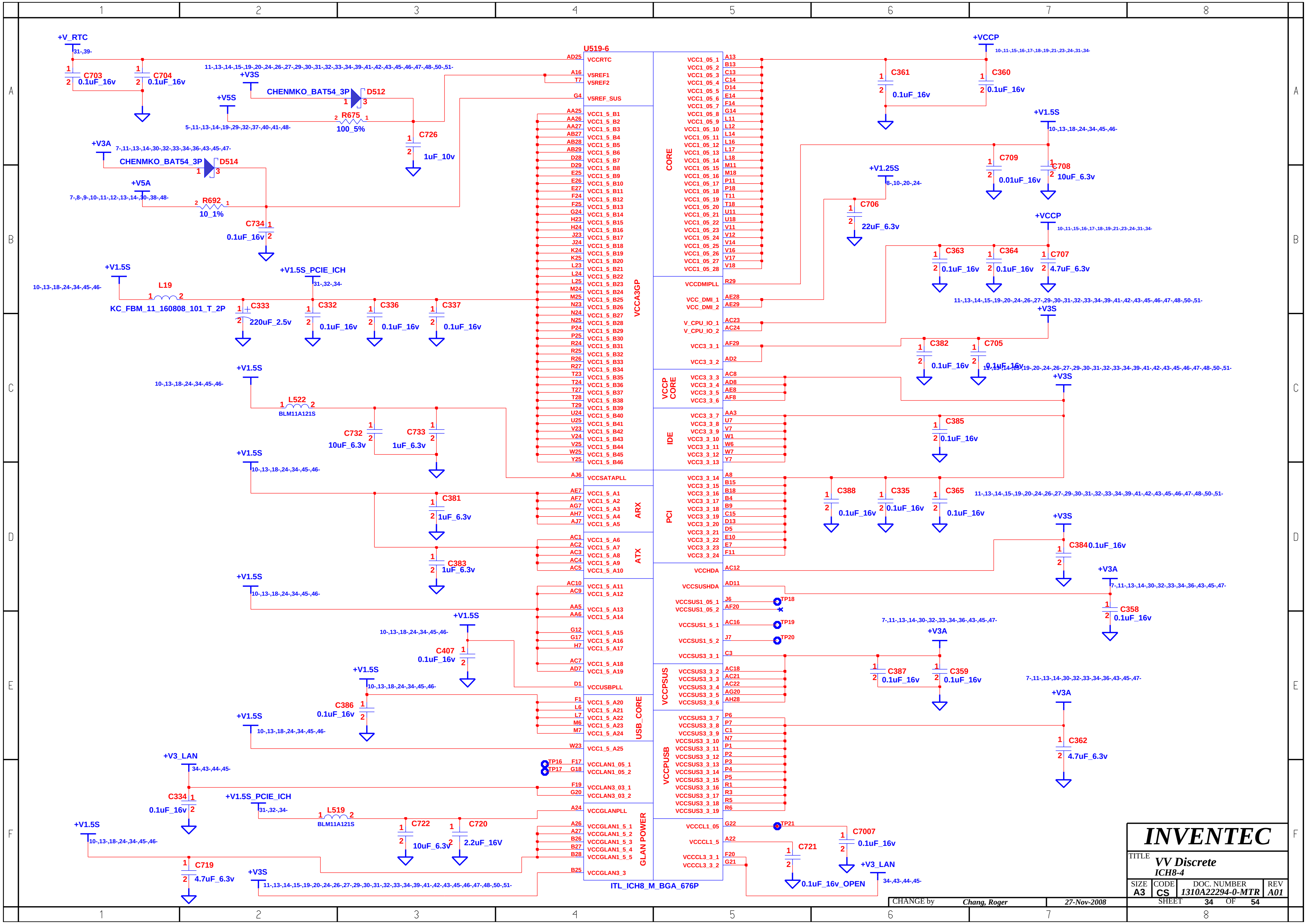
U519-6
ITL_ICH8_M_BGA_676P
+V_RTC
31-,39-
C703
0.1uF_16v
C704
0.1uF_16v
11-,13-,14-,15-,19-,20-,24-,26-,27-,29-,30-,31-,32-,33-,34-,39-,41-,42-,43-,45-,46-,47-,48-,50-,51-
+V3S
CHENMKO_BAT54_3P
D512
+V5S
R675
100_5%
5-,11-,13-,14-,19-,29-,32-,37-,40-,41-,48-
C726
1uF_10v
+V3A
7-,11-,13-,14-,30-,32-,33-,34-,36-,43-,45-,47-
CHENMKO_BAT54_3P
D514
+V5A
7-,8-,9-,10-,11-,12-,13-,14-,30-,32-,38-,48-
R692
10_1%
C734
0.1uF_16v
+V1.5S
10-,13-,18-,24-,34-,45-,46-
L19
KC_FBM_11_160808_101_T_2P
+V1.5S_PCIE_ICH
31-,32-,34-
C333
220uF_2.5v
C332
0.1uF_16v
C336
0.1uF_16v
C337
0.1uF_16v
+V1.5S
10-,13-,18-,24-,34-,45-,46-
L522
BLM11A121S
C732
10uF_6.3v
C733
1uF_6.3v
+V1.5S
10-,13-,18-,24-,34-,45-,46-
C381
1uF_6.3v
C383
1uF_6.3v
+V1.5S
10-,13-,18-,24-,34-,45-,46-
+V1.5S
10-,13-,18-,24-,34-,45-,46-
C407
0.1uF_16v
+V1.5S
10-,13-,18-,24-,34-,45-,46-
C386
0.1uF_16v
+V1.5S
10-,13-,18-,24-,34-,45-,46-
+V3_LAN
34-,43-,44-,45-
C334
0.1uF_16v
+V1.5S_PCIE_ICH
31-,32-,34-
L519
BLM11A121S
C722
10uF_6.3v
C720
2.2uF_16V
+V1.5S
10-,13-,18-,24-,34-,45-,46-
C719
4.7uF_6.3v
+V3S
11-,13-,14-,15-,19-,20-,24-,26-,27-,29-,30-,31-,32-,33-,34-,39-,41-,42-,43-,45-,46-,47-,48-,50-,51-
TP16
TP17
AD25 VCCRTC
A16 V5REF1
T7 V5REF2
G4 V5REF_SUS
AA25 VCC1_5_B1
AA26 VCC1_5_B2
AA27 VCC1_5_B3
AB27 VCC1_5_B4
AB28 VCC1_5_B5
AB29 VCC1_5_B6
D28 VCC1_5_B7
D29 VCC1_5_B8
E25 VCC1_5_B9
E26 VCC1_5_B10
E27 VCC1_5_B11
F24 VCC1_5_B12
F25 VCC1_5_B13
G24 VCC1_5_B14
H23 VCC1_5_B15
H24 VCC1_5_B16
J23 VCC1_5_B17
J24 VCC1_5_B18
K24 VCC1_5_B19
K25 VCC1_5_B20
L23 VCC1_5_B21
L24 VCC1_5_B22
L25 VCC1_5_B23
M24 VCC1_5_B24
M25 VCC1_5_B25
N23 VCC1_5_B26
N24 VCC1_5_B27
N25 VCC1_5_B28
P24 VCC1_5_B29
P25 VCC1_5_B30
R24 VCC1_5_B31
R25 VCC1_5_B32
R26 VCC1_5_B33
R27 VCC1_5_B34
T23 VCC1_5_B35
T24 VCC1_5_B36
T27 VCC1_5_B37
T28 VCC1_5_B38
T29 VCC1_5_B39
U24 VCC1_5_B40
U25 VCC1_5_B41
V23 VCC1_5_B42
V24 VCC1_5_B43
V25 VCC1_5_B44
W25 VCC1_5_B45
Y25 VCC1_5_B46
VCCA3GP
AJ6 VCCSATAPLL
AE7 VCC1_5_A1
AF7 VCC1_5_A2
AG7 VCC1_5_A3
AH7 VCC1_5_A4
AJ7 VCC1_5_A5
ARX
AC1 VCC1_5_A6
AC2 VCC1_5_A7
AC3 VCC1_5_A8
AC4 VCC1_5_A9
AC5 VCC1_5_A10
ATX
AC10 VCC1_5_A11
AC9 VCC1_5_A12
AA5 VCC1_5_A13
AA6 VCC1_5_A14
G12 VCC1_5_A15
G17 VCC1_5_A16
H7 VCC1_5_A17
AC7 VCC1_5_A18
AD7 VCC1_5_A19
D1 VCCUSBPLL
F1 VCC1_5_A20
L6 VCC1_5_A21
L7 VCC1_5_A22
M6 VCC1_5_A23
M7 VCC1_5_A24
USB_CORE
W23 VCC1_5_A25
F17 VCCLAN1_05_1
G18 VCCLAN1_05_2
F19 VCCLAN3_03_1
G20 VCCLAN3_03_2
A24 VCCGLANPLL
A26 VCCGLAN1_5_1
A27 VCCGLAN1_5_2
B26 VCCGLAN1_5_3
B27 VCCGLAN1_5_4
B28 VCCGLAN1_5_5
B25 VCCGLAN3_3
GLAN POWER
VCC1_05_1 A13
VCC1_05_2 B13
VCC1_05_3 C13
VCC1_05_4 C14
VCC1_05_5 D14
VCC1_05_6 E14
VCC1_05_7 F14
VCC1_05_8 G14
VCC1_05_9 L11
VCC1_05_10 L12
VCC1_05_11 L14
VCC1_05_12 L16
VCC1_05_13 L17
VCC1_05_14 L18
VCC1_05_15 M11
VCC1_05_16 M18
VCC1_05_17 P11
VCC1_05_18 P18
VCC1_05_19 T11
VCC1_05_20 T18
VCC1_05_21 U11
VCC1_05_22 U18
VCC1_05_23 V11
VCC1_05_24 V12
VCC1_05_25 V14
VCC1_05_26 V16
VCC1_05_27 V17
VCC1_05_28 V18
CORE
VCCDMIPLL R29
VCC_DMI_1 AE28
VCC_DMI_2 AE29
V_CPU_IO_1 AC23
V_CPU_IO_2 AC24
VCC3_3_1 AF29
VCC3_3_2 AD2
VCCP CORE
VCC3_3_3 AC8
VCC3_3_4 AD8
VCC3_3_5 AE8
VCC3_3_6 AF8
IDE
VCC3_3_7 AA3
VCC3_3_8 U7
VCC3_3_9 V7
VCC3_3_10 W1
VCC3_3_11 W6
VCC3_3_12 W7
VCC3_3_13 Y7
PCI
VCC3_3_14 A8
VCC3_3_15 B15
VCC3_3_16 B18
VCC3_3_17 B4
VCC3_3_18 B9
VCC3_3_19 C15
VCC3_3_20 D13
VCC3_3_21 D5
VCC3_3_22 E10
VCC3_3_23 E7
VCC3_3_24 F11
VCCHDA AC12
VCCSUSHDA AD11
VCCSUS1_05_1 J6
VCCSUS1_05_2 AF20
VCCSUS1_5_1 AC16
VCCSUS1_5_2 J7
VCCSUS3_3_1 C3
VCCPSUS
VCCSUS3_3_2 AC18
VCCSUS3_3_3 AC21
VCCSUS3_3_4 AC22
VCCSUS3_3_5 AG20
VCCSUS3_3_6 AH28
VCCPUSB
VCCSUS3_3_7 P6
VCCSUS3_3_8 P7
VCCSUS3_3_9 C1
VCCSUS3_3_10 N7
VCCSUS3_3_11 P1
VCCSUS3_3_12 P2
VCCSUS3_3_13 P3
VCCSUS3_3_14 P4
VCCSUS3_3_15 P5
VCCSUS3_3_16 R1
VCCSUS3_3_17 R3
VCCSUS3_3_18 R5
VCCSUS3_3_19 R6
VCCCL1_05 G22
VCCCL1_5 A22
VCCCL3_3_1 F20
VCCCL3_3_2 G21
TP18
TP19
TP20
TP21
+VCCP
10-,11-,15-,16-,17-,18-,19-,21-,23-,24-,31-,34-
C361
0.1uF_16v
C360
0.1uF_16v
+V1.5S
10-,13-,18-,24-,34-,45-,46-
C709
0.01uF_16v
C708
10uF_6.3v
+V1.25S
8-,10-,20-,24-
C706
22uF_6.3v
+VCCP
10-,11-,15-,16-,17-,18-,19-,21-,23-,24-,31-,34-
C363
0.1uF_16v
C364
0.1uF_16v
C707
4.7uF_6.3v
11-,13-,14-,15-,19-,20-,24-,26-,27-,29-,30-,31-,32-,33-,34-,39-,41-,42-,43-,45-,46-,47-,48-,50-,51-
+V3S
C382
0.1uF_16v
C705
0.1uF_16v
11-,13-,14-,15-,19-,20-,24-,26-,27-,29-,30-,31-,32-,33-,34-,39-,41-,42-,43-,45-,46-,47-,48-,50-,51-
+V3S
C385
0.1uF_16v
C388
0.1uF_16v
C335
0.1uF_16v
C365
0.1uF_16v
11-,13-,14-,15-,19-,20-,24-,26-,27-,29-,30-,31-,32-,33-,34-,39-,41-,42-,43-,45-,46-,47-,48-,50-,51-
+V3S
C384
0.1uF_16v
+V3A
7-,11-,13-,14-,30-,32-,33-,34-,36-,43-,45-,47-
C358
0.1uF_16v
7-,11-,13-,14-,30-,32-,33-,34-,36-,43-,45-,47-
+V3A
C387
0.1uF_16v
C359
0.1uF_16v
7-,11-,13-,14-,30-,32-,33-,34-,36-,43-,45-,47-
+V3A
C362
4.7uF_6.3v
C7007
0.1uF_16v
C721
0.1uF_16v_OPEN
+V3_LAN
34-,43-,44-,45-
1
2
3
4
5
6
7
8
A
B
C
D
E
F

INVENTEC

TITLE VV Discrete
ICH8-4

SIZE	CODE	DOC. NUMBER	REV
A3	CS	1310A22294-0-MTR	A01

CHANGE by Chang, Roger 27-Nov-2008 SHEET 34 OF 54

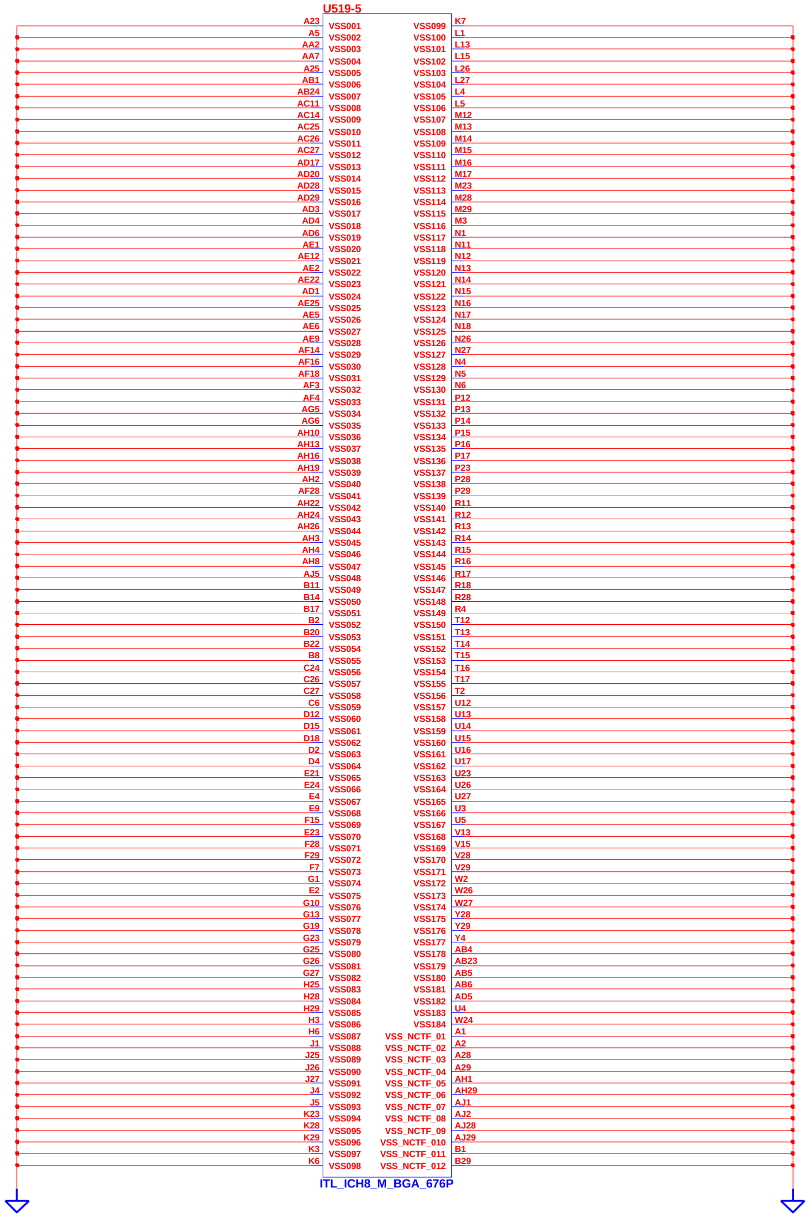
U519-5
A23 VSS001
A5 VSS002
AA2 VSS003
AA7 VSS004
A25 VSS005
AB1 VSS006
AB24 VSS007
AC11 VSS008
AC14 VSS009
AC25 VSS010
AC26 VSS011
AC27 VSS012
AD17 VSS013
AD20 VSS014
AD28 VSS015
AD29 VSS016
AD3 VSS017
AD4 VSS018
AD6 VSS019
AE1 VSS020
AE12 VSS021
AE2 VSS022
AE22 VSS023
AD1 VSS024
AE25 VSS025
AE5 VSS026
AE6 VSS027
AE9 VSS028
AF14 VSS029
AF16 VSS030
AF18 VSS031
AF3 VSS032
AF4 VSS033
AG5 VSS034
AG6 VSS035
AH10 VSS036
AH13 VSS037
AH16 VSS038
AH19 VSS039
AH2 VSS040
AF28 VSS041
AH22 VSS042
AH24 VSS043
AH26 VSS044
AH3 VSS045
AH4 VSS046
AH8 VSS047
AJ5 VSS048
B11 VSS049
B14 VSS050
B17 VSS051
B2 VSS052
B20 VSS053
B22 VSS054
B8 VSS055
C24 VSS056
C26 VSS057
C27 VSS058
C6 VSS059
D12 VSS060
D15 VSS061
D18 VSS062
D2 VSS063
D4 VSS064
E21 VSS065
E24 VSS066
E4 VSS067
E9 VSS068
F15 VSS069
E23 VSS070
F28 VSS071
F29 VSS072
F7 VSS073
G1 VSS074
E2 VSS075
G10 VSS076
G13 VSS077
G19 VSS078
G23 VSS079
G25 VSS080
G26 VSS081
G27 VSS082
H25 VSS083
H28 VSS084
H29 VSS085
H3 VSS086
H6 VSS087
J1 VSS088
J25 VSS089
J26 VSS090
J27 VSS091
J4 VSS092
J5 VSS093
K23 VSS094
K28 VSS095
K29 VSS096
K3 VSS097
K6 VSS098
VSS099 K7
VSS100 L1
VSS101 L13
VSS102 L15
VSS103 L26
VSS104 L27
VSS105 L4
VSS106 L5
VSS107 M12
VSS108 M13
VSS109 M14
VSS110 M15
VSS111 M16
VSS112 M17
VSS113 M23
VSS114 M28
VSS115 M29
VSS116 M3
VSS117 N1
VSS118 N11
VSS119 N12
VSS120 N13
VSS121 N14
VSS122 N15
VSS123 N16
VSS124 N17
VSS125 N18
VSS126 N26
VSS127 N27
VSS128 N4
VSS129 N5
VSS130 N6
VSS131 P12
VSS132 P13
VSS133 P14
VSS134 P15
VSS135 P16
VSS136 P17
VSS137 P23
VSS138 P28
VSS139 P29
VSS140 R11
VSS141 R12
VSS142 R13
VSS143 R14
VSS144 R15
VSS145 R16
VSS146 R17
VSS147 R18
VSS148 R28
VSS149 R4
VSS150 T12
VSS151 T13
VSS152 T14
VSS153 T15
VSS154 T16
VSS155 T17
VSS156 T2
VSS157 U12
VSS158 U13
VSS159 U14
VSS160 U15
VSS161 U16
VSS162 U17
VSS163 U23
VSS164 U26
VSS165 U27
VSS166 U3
VSS167 U5
VSS168 V13
VSS169 V15
VSS170 V28
VSS171 V29
VSS172 W2
VSS173 W26
VSS174 W27
VSS175 Y28
VSS176 Y29
VSS177 Y4
VSS178 AB4
VSS179 AB23
VSS180 AB5
VSS181 AB6
VSS182 AD5
VSS183 U4
VSS184 W24
VSS_NCTF_01 A1
VSS_NCTF_02 A2
VSS_NCTF_03 A28
VSS_NCTF_04 A29
VSS_NCTF_05 AH1
VSS_NCTF_06 AH29
VSS_NCTF_07 AJ1
VSS_NCTF_08 AJ2
VSS_NCTF_09 AJ28
VSS_NCTF_010 AJ29
VSS_NCTF_011 B1
VSS_NCTF_012 B29
ITL_ICH8_M_BGA_676P

INVENTEC

TITLE *VV Discrete*
ICH8-5

SIZE	CODE	DOC. NUMBER	REV
A3	CS	*1310A22294-0-MTR*	*A01*

CHANGE by *Chang, Roger* *27-Nov-2008* SHEET 35 OF 54

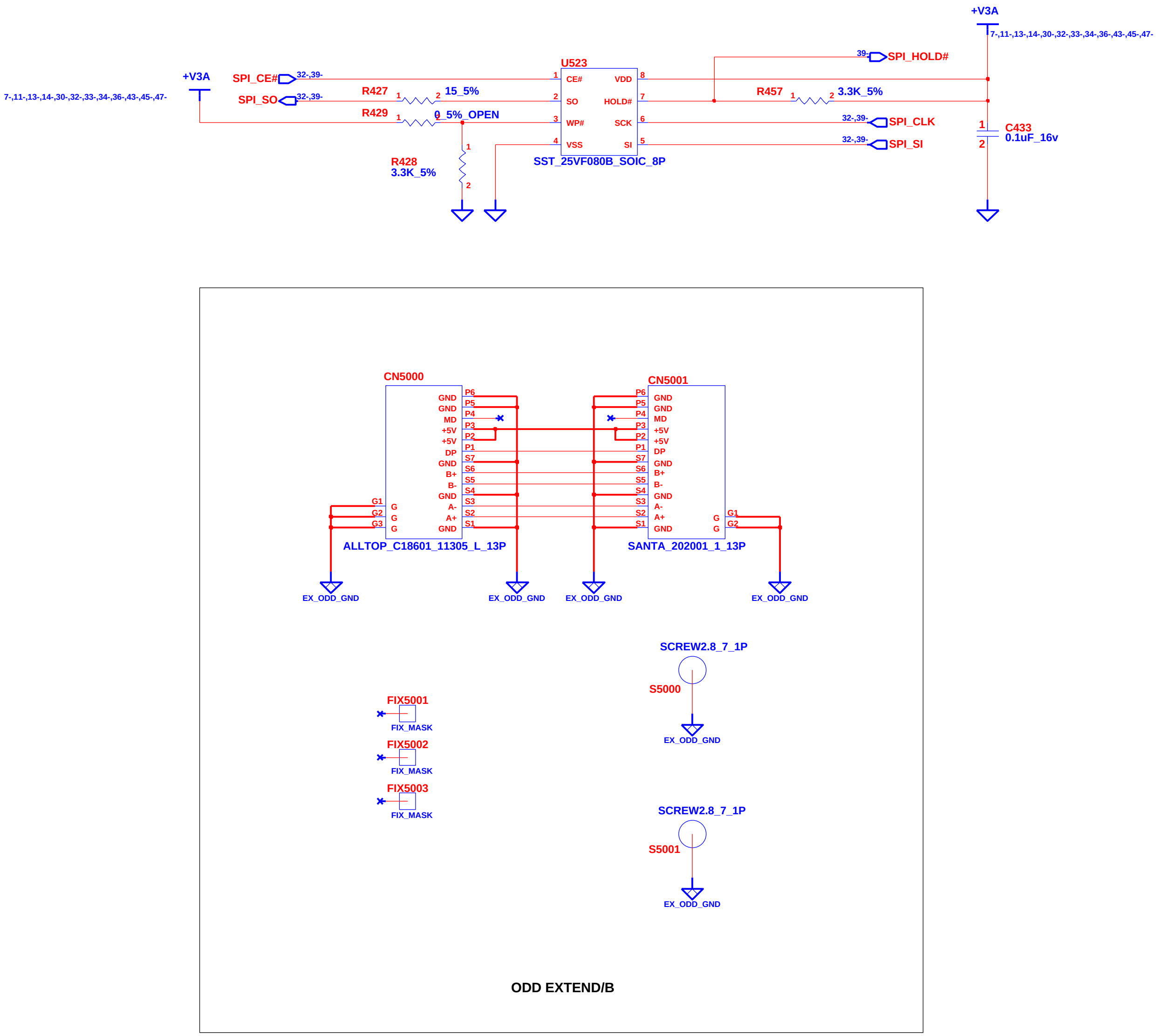
+V3A
7-,11-,13-,14-,30-,32-,33-,34-,36-,43-,45-,47-
SPI_CE#
32-,39-
SPI_SO
32-,39-
R427
1
2
15_5%
R429
1
2
0_5%_OPEN
R428
3.3K_5%
1
2
U523
1 CE#
2 SO
3 WP#
4 VSS
8 VDD
7 HOLD#
6 SCK
5 SI
SST_25VF080B_SOIC_8P
39-
SPI_HOLD#
R457
1
2
3.3K_5%
32-,39-
SPI_CLK
32-,39-
SPI_SI
+V3A
7-,11-,13-,14-,30-,32-,33-,34-,36-,43-,45-,47-
C433
0.1uF_16v
1
2
CN5000
P6 GND
P5 GND
P4 MD
P3 +5V
P2 +5V
P1 DP
S7 GND
S6 B+
S5 B-
S4 GND
S3 A-
S2 A+
S1 GND
G1 G
G2 G
G3 G
ALLTOP_C18601_11305_L_13P
CN5001
P6 GND
P5 GND
P4 MD
P3 +5V
P2 +5V
P1 DP
S7 GND
S6 B+
S5 B-
S4 GND
S3 A-
S2 A+
S1 GND
G1 G
G2 G
SANTA_202001_1_13P
EX_ODD_GND
EX_ODD_GND
EX_ODD_GND
EX_ODD_GND
SCREW2.8_7_1P
S5000
EX_ODD_GND
FIX5001
FIX_MASK
FIX5002
FIX_MASK
FIX5003
FIX_MASK
SCREW2.8_7_1P
S5001
EX_ODD_GND
ODD EXTEND/B

INVENTEC

TITLE *VV Discrete*
SYSTEM BIOS

SIZE	CODE	DOC. NUMBER	REV
A3	CS	*1310A22294-0-MTR*	*A01*

CHANGE by *Chang, Roger* *27-Nov-2008*

SHEET 36 OF 54

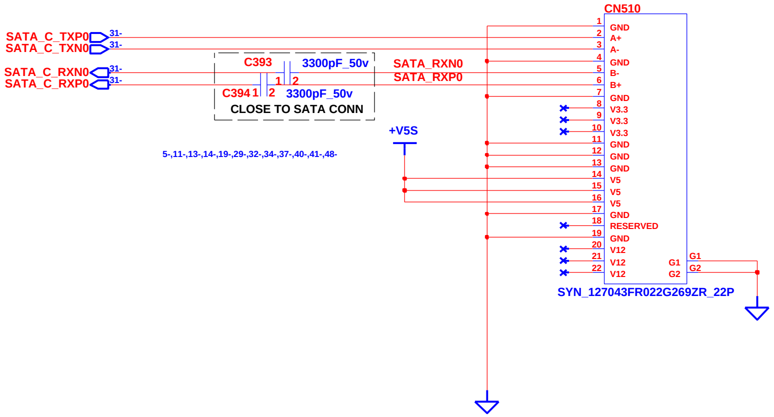
CN510
SATA_C_TXP0
SATA_C_TXN0
SATA_C_RXN0
SATA_C_RXP0
31-
C393
3300pF_50v
C394
3300pF_50v
CLOSE TO SATA CONN
SATA_RXN0
SATA_RXP0
+V5S
5-,11-,13-,14-,19-,29-,32-,34-,37-,40-,41-,48-
1 GND
2 A+
3 A-
4 GND
5 B-
6 B+
7 GND
8 V3.3
9 V3.3
10 V3.3
11 GND
12 GND
13 GND
14 V5
15 V5
16 V5
17 GND
18 RESERVED
19 GND
20 V12
21 V12
22 V12
G1
G2
SYN_127043FR022G269ZR_22P

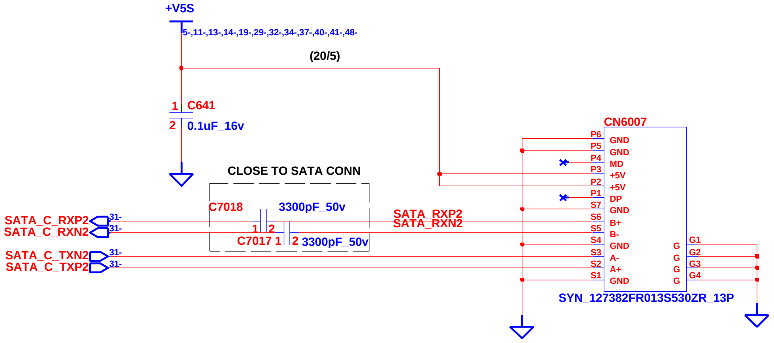
+V5S
5-,11-,13-,14-,19-,29-,32-,34-,37-,40-,41-,48-
(20/5)
C641
0.1uF_16v
CLOSE TO SATA CONN
C7018
3300pF_50v
C7017
3300pF_50v
SATA_C_RXP2
SATA_C_RXN2
SATA_C_TXN2
SATA_C_TXP2
31-
SATA_RXP2
SATA_RXN2
CN6007
P6 GND
P5 GND
P4 MD
P3 +5V
P2 +5V
P1 DP
S7 GND
S6 B+
S5 B-
S4 GND
S3 A-
S2 A+
S1 GND
G G1
G G2
G G3
G G4
SYN_127382FR013S530ZR_13P

INVENTEC

TITLE
VV Discrete
HDD & ODD CONN

SIZE	CODE	DOC. NUMBER	REV
A3	CS	*1310A22294-0-MTR*	*A01*

CHANGE by *Chang, Roger* *18-Nov-2008*

SHEET 37 OF 54

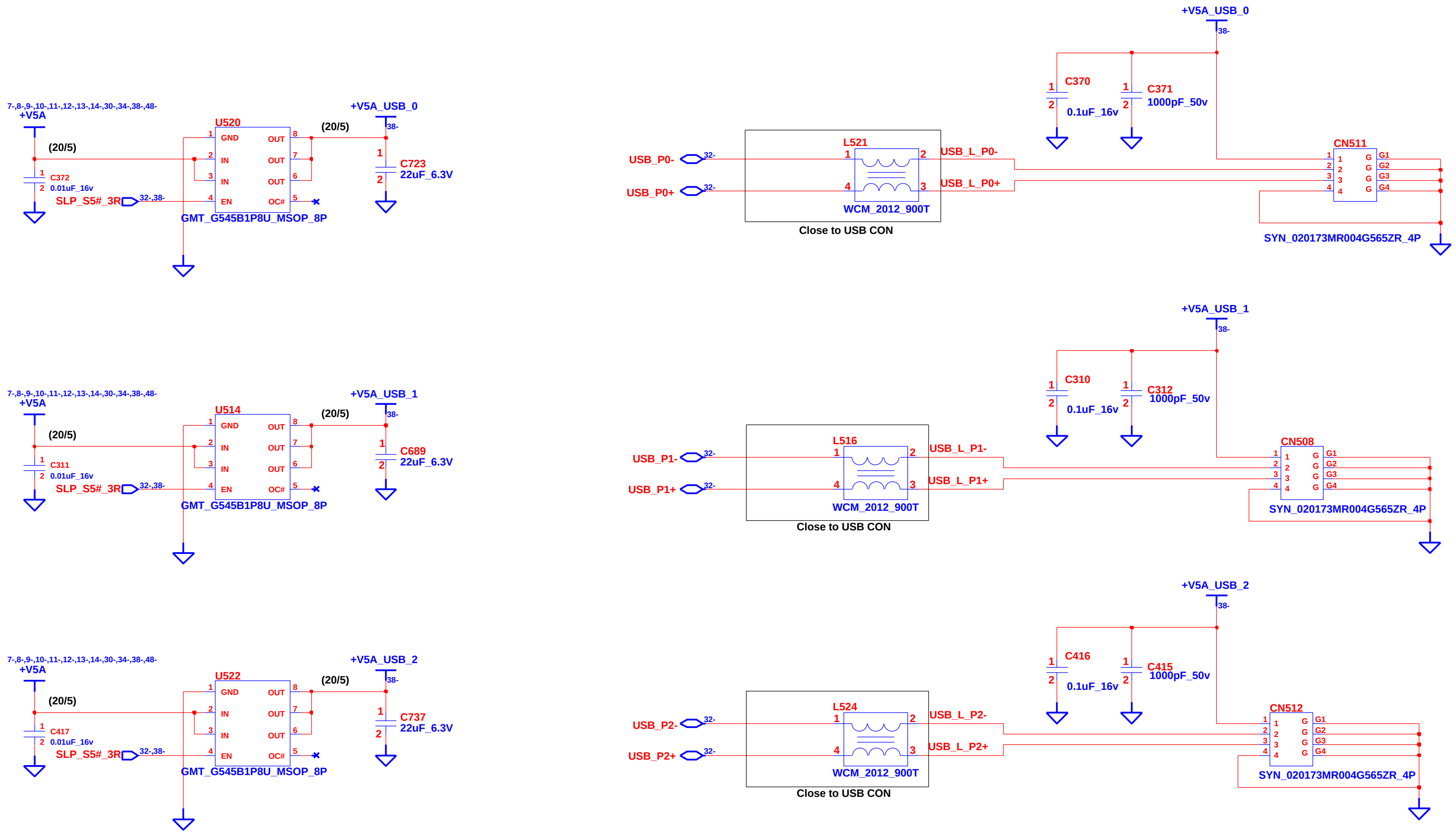
7-,8-,9-,10-,11-,12-,13-,14-,30-,34-,38-,48-
+V5A
(20/5)
C372
0.01uF_16v
SLP_S5#_3R
32-,38-
U520
GND
IN
IN
EN
OUT
OUT
OUT
OC#
GMT_G545B1P8U_MSOP_8P
(20/5)
+V5A_USB_0
38-
C723
22uF_6.3V
7-,8-,9-,10-,11-,12-,13-,14-,30-,34-,38-,48-
+V5A
(20/5)
C311
0.01uF_16v
SLP_S5#_3R
32-,38-
U514
GMT_G545B1P8U_MSOP_8P
(20/5)
+V5A_USB_1
38-
C689
22uF_6.3V
7-,8-,9-,10-,11-,12-,13-,14-,30-,34-,38-,48-
+V5A
(20/5)
C417
0.01uF_16v
SLP_S5#_3R
32-,38-
U522
GMT_G545B1P8U_MSOP_8P
(20/5)
+V5A_USB_2
38-
C737
22uF_6.3V
+V5A_USB_0
38-
C370
0.1uF_16v
C371
1000pF_50v
USB_P0-
USB_P0+
32-
L521
WCM_2012_900T
Close to USB CON
USB_L_P0-
USB_L_P0+
CN511
G1
G2
G3
G4
SYN_020173MR004G565ZR_4P
+V5A_USB_1
38-
C310
0.1uF_16v
C312
1000pF_50v
USB_P1-
USB_P1+
32-
L516
WCM_2012_900T
Close to USB CON
USB_L_P1-
USB_L_P1+
CN508
SYN_020173MR004G565ZR_4P
+V5A_USB_2
38-
C416
0.1uF_16v
C415
1000pF_50v
USB_P2-
USB_P2+
32-
L524
WCM_2012_900T
Close to USB CON
USB_L_P2-
USB_L_P2+
CN512
SYN_020173MR004G565ZR_4P

INVENTEC

TITLE *VV Discrete*
USB CONN

SIZE	CODE	DOC. NUMBER	REV
A3	CS	1310A22294-0-MTR	A01

CHANGE by *Chang, Roger* *4-Nov-2008* SHEET 38 OF 54

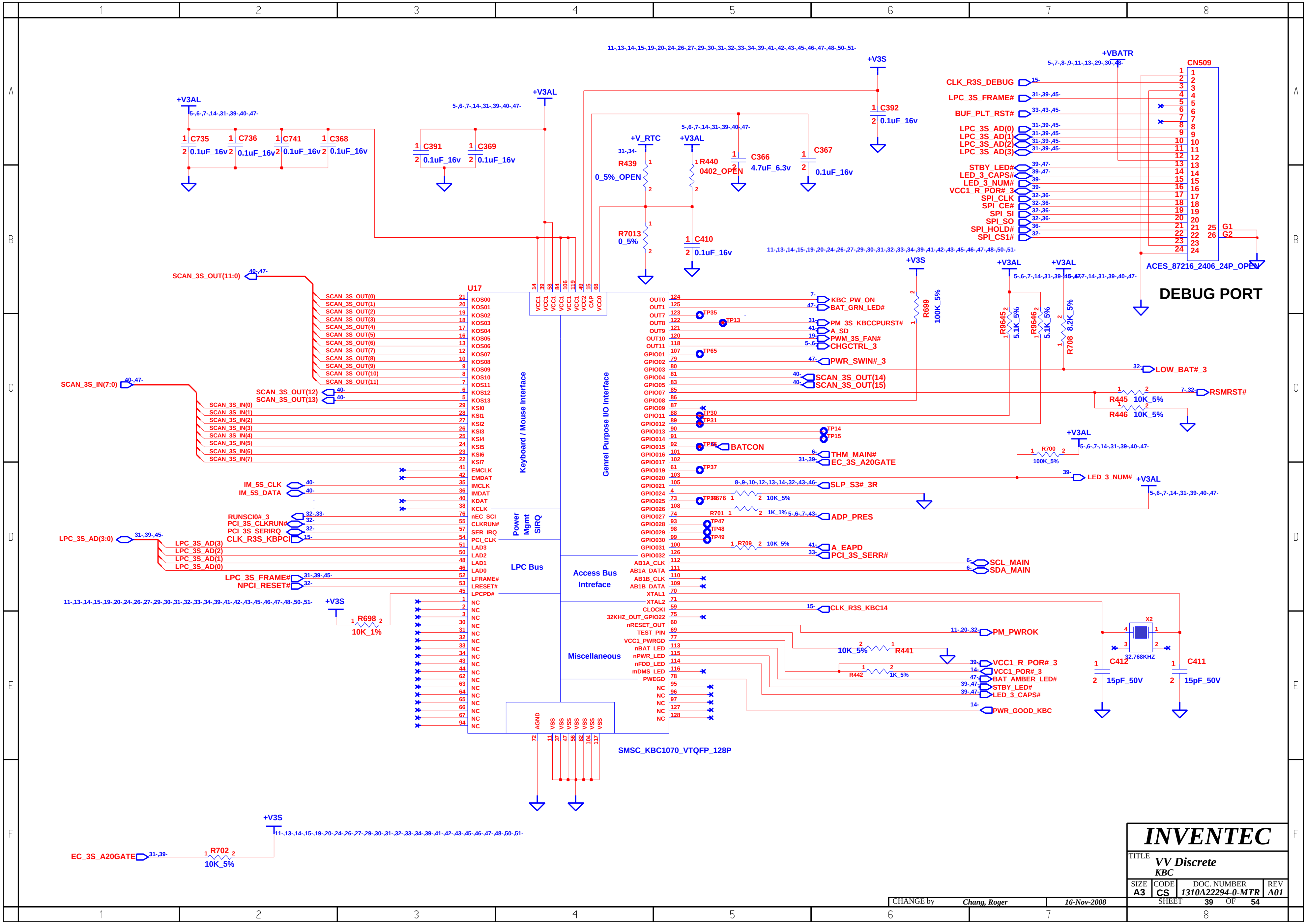
U17
SMSC_KBC1070_VTQFP_128P
Keyboard / Mouse Interface
Genrel Purpose I/O Interface
Power Mgmt
SIRQ
LPC Bus
Access Bus Intreface
Miscellaneous
DEBUG PORT
CN509
ACES_87216_2406_24P_OPEN
+V3AL
+V3S
+VBATR
+V_RTC
C735
C736
C741
C368
C391
C369
C366
C367
C392
C410
C411
C412
0.1uF_16v
4.7uF_6.3v
15pF_50V
R439
0_5%_OPEN
R440
0402_OPEN
R7013
0_5%
R699
100K_5%
R9645
R9646
5.1K_5%
R708
8.2K_5%
R445
R446
10K_5%
R700
100K_5%
R676
R701
1K_1%
R709
R698
10K_1%
R441
R442
1K_5%
R702
10K_5%
X2
32.768KHZ
SCAN_3S_OUT(11:0)
SCAN_3S_IN(7:0)
SCAN_3S_OUT(12)
SCAN_3S_OUT(13)
IM_5S_CLK
IM_5S_DATA
RUNSCIO#_3
PCI_3S_CLKRUN#
PCI_3S_SERIRQ
CLK_R3S_KBPCI
LPC_3S_AD(3:0)
LPC_3S_FRAME#
NPCI_RESET#
EC_3S_A20GATE
KBC_PW_ON
BAT_GRN_LED#
PM_3S_KBCCPURST#
A_SD
PWM_3S_FAN#
CHGCTRL_3
PWR_SWIN#_3
SCAN_3S_OUT(14)
SCAN_3S_OUT(15)
LOW_BAT#_3
RSMRST#
BATCON
THM_MAIN#
EC_3S_A20GATE
LED_3_NUM#
SLP_S3#_3R
ADP_PRES
A_EAPD
PCI_3S_SERR#
SCL_MAIN
SDA_MAIN
CLK_R3S_KBC14
PM_PWROK
VCC1_R_POR#_3
VCC1_POR#_3
BAT_AMBER_LED#
STBY_LED#
LED_3_CAPS#
PWR_GOOD_KBC
CLK_R3S_DEBUG
LPC_3S_FRAME#
BUF_PLT_RST#
LPC_3S_AD(0)
LPC_3S_AD(1)
LPC_3S_AD(2)
LPC_3S_AD(3)
STBY_LED#
LED_3_CAPS#
LED_3_NUM#
VCC1_R_POR#_3
SPI_CLK
SPI_CE#
SPI_SI
SPI_SO
SPI_HOLD#
SPI_CS1#
TP35
TP13
TP65
TP30
TP31
TP14
TP15
TP36
TP37
TP38
TP47
TP48
TP49
KSO0 … KSO13
KSI0 … KSI7
EMCLK
EMDAT
IMCLK
IMDAT
KDAT
KCLK
nEC_SCI
CLKRUN#
SER_IRQ
PCI_CLK
LAD3
LAD2
LAD1
LAD0
LFRAME#
LRESET#
LPCPD#
OUT0
OUT1
OUT7
OUT8
OUT9
OUT10
OUT11
GPIO01 … GPIO032
AB1A_CLK
AB1A_DATA
AB1B_CLK
AB1B_DATA
XTAL1
XTAL2
CLOCKI
32KHZ_OUT_GPIO22
nRESET_OUT
TEST_PIN
VCC1_PWRGD
nBAT_LED
nPWR_LED
nFDD_LED
mDMS_LED
PWEGD
AGND
VSS
VCC1
VCC2
CAP
VCC0
NC
11-,13-,14-,15-,19-,20-,24-,26-,27-,29-,30-,31-,32-,33-,34-,39-,41-,43-,45-,46-,47-,48-,50-,51-

INVENTEC

TITLE *VV Discrete*
KBC

SIZE	CODE	DOC. NUMBER	REV
A3	CS	1310A22294-0-MTR	A01

CHANGE by *Chang, Roger* *16-Nov-2008*

SHEET 39 OF 54

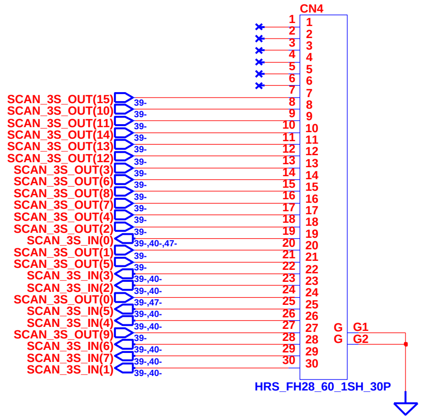
CN4
1
2
3
4
5
6
7
SCAN_3S_OUT(15) 39- 8
SCAN_3S_OUT(10) 39- 9
SCAN_3S_OUT(11) 39- 10
SCAN_3S_OUT(14) 39- 11
SCAN_3S_OUT(13) 39- 12
SCAN_3S_OUT(12) 39- 13
SCAN_3S_OUT(3) 39- 14
SCAN_3S_OUT(6) 39- 15
SCAN_3S_OUT(8) 39- 16
SCAN_3S_OUT(7) 39- 17
SCAN_3S_OUT(4) 39- 18
SCAN_3S_OUT(2) 39- 19
SCAN_3S_IN(0) 39-,40-,47- 20
SCAN_3S_OUT(1) 39- 21
SCAN_3S_OUT(5) 39- 22
SCAN_3S_IN(3) 39-,40- 23
SCAN_3S_IN(2) 39-,40- 24
SCAN_3S_OUT(0) 39-,47- 25
SCAN_3S_IN(5) 39-,40- 26
SCAN_3S_IN(4) 39-,40- 27
SCAN_3S_OUT(9) 39- 28
SCAN_3S_IN(6) 39-,40- 29
SCAN_3S_IN(7) 39-,40- 30
G G1
G G2
HRS_FH28_60_1SH_30P

KEYBOARD CONN

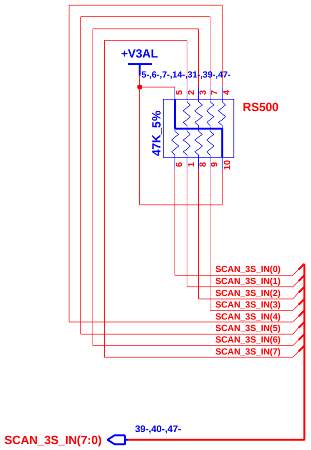
+V3AL
5-,6-,7-,14-,31-,39-,47-
5 2 3 7 4
RS500
47K_5%
6 1 8 9 10
SCAN_3S_IN(0)
SCAN_3S_IN(1)
SCAN_3S_IN(2)
SCAN_3S_IN(3)
SCAN_3S_IN(4)
SCAN_3S_IN(5)
SCAN_3S_IN(6)
SCAN_3S_IN(7)
39-,40-,47-
SCAN_3S_IN(7:0)

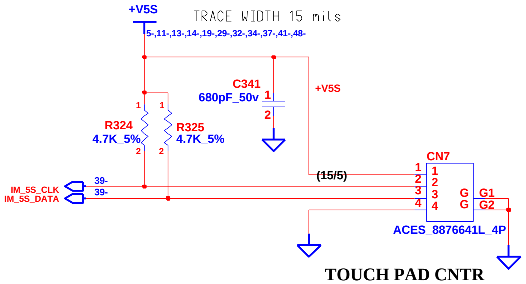
+V5S
TRACE WIDTH 15 mils
5-,11-,13-,14-,19-,29-,32-,34-,37-,41-,48-
C341
680pF_50v
1
2
+V5S
R324
4.7K_5%
R325
4.7K_5%
1
2
(15/5)
IM_5S_CLK 39-
IM_5S_DATA 39-
CN7
1
2
3
4
G G1
G G2
ACES_8876641L_4P

TOUCH PAD CNTR

INVENTEC

TITLE *VV Discrete*
KB & TP CONN

SIZE	CODE	DOC. NUMBER	REV
A3	CS	*1310A22294-0-MTR*	*A01*

CHANGE by *Chang, Roger* *15-Dec-2008*

SHEET 40 OF 54

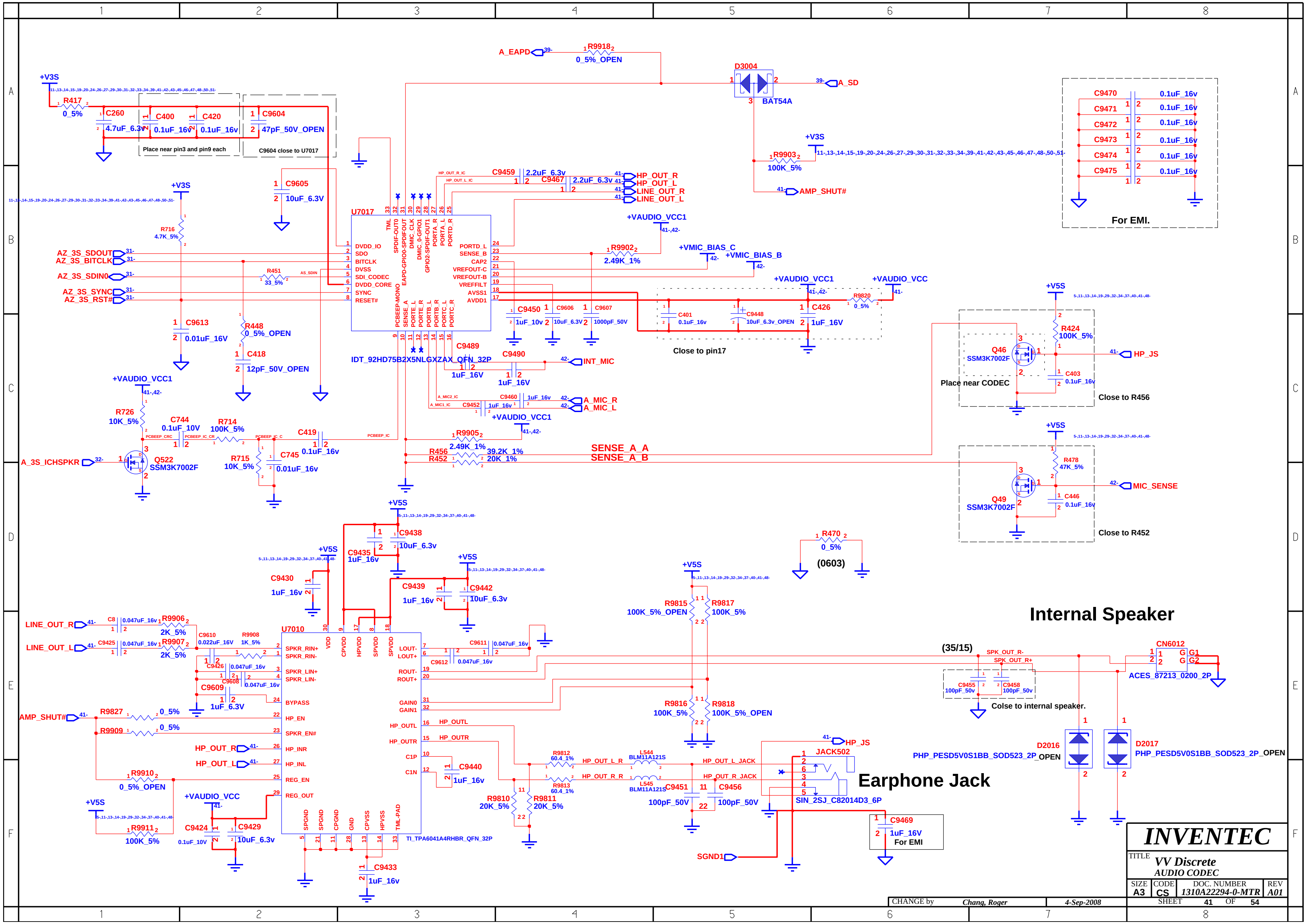
A_EAPD
R9918
0_5%_OPEN
D3004
BAT54A
A_SD
+V3S
R417
0_5%
C260
4.7uF_6.3v
C400
0.1uF_16v
C420
0.1uF_16v
C9604
47pF_50V_OPEN
Place near pin3 and pin9 each
C9604 close to U7017
C9605
10uF_6.3V
R9903
100K_5%
AMP_SHUT#
C9470
C9471
C9472
C9473
C9474
C9475
0.1uF_16v
For EMI.
R716
4.7K_5%
AZ_3S_SDOUT
AZ_3S_BITCLK
AZ_3S_SDIN0
AZ_3S_SYNC
AZ_3S_RST#
R451
33_5%
U7017
DVDD_IO
SDO
BITCLK
DVSS
SDI_CODEC
DVDD_CORE
SYNC
RESET#
PORT_L
SENSE_B
CAP2
VREFOUT-C
VREFOUT-B
VREFFILT
AVSS1
AVDD1
C9459
2.2uF_6.3v
C9467
2.2uF_6.3v
HP_OUT_R
HP_OUT_L
LINE_OUT_R
LINE_OUT_L
+VAUDIO_VCC1
R9902
2.49K_1%
+VMIC_BIAS_C
+VMIC_BIAS_B
+VAUDIO_VCC
R9820
0_5%
C9450
1uF_10v
C9606
10uF_6.3V
C9607
1000pF_50V
C401
0.1uF_16v
C9448
10uF_6.3v_OPEN
C426
1uF_16V
Close to pin17
C9613
0.01uF_16V
R448
0_5%_OPEN
C418
12pF_50V_OPEN
IDT_92HD75B2X5NLGXZAX_QFN_32P
C9489
1uF_16V
C9490
1uF_16V
INT_MIC
A_MIC_R
A_MIC_L
C9460
C9452
1uF_16v
+VAUDIO_VCC1
R726
10K_5%
C744
0.1uF_10V
R714
100K_5%
C419
0.1uF_16v
C745
0.01uF_16V
R715
10K_5%
A_3S_ICHSPKR
Q522
SSM3K7002F
R9905
2.49K_1%
R456
R452
39.2K_1%
20K_1%
SENSE_A_A
SENSE_A_B
+V5S
Q46
SSM3K7002F
R424
100K_5%
HP_JS
C403
0.1uF_16v
Place near CODEC
Close to R456
Q49
SSM3K7002F
R478
47K_5%
MIC_SENSE
C446
0.1uF_16v
Close to R452
C9438
10uF_6.3v
C9435
1uF_16v
C9430
1uF_16v
C9439
1uF_16v
C9442
10uF_6.3v
R470
0_5%
(0603)
R9815
100K_5%_OPEN
R9817
100K_5%
Internal Speaker
LINE_OUT_R
LINE_OUT_L
C8
0.047uF_16v
C9425
0.047uF_16v
R9906
2K_5%
R9907
2K_5%
C9610
0.022uF_16V
R9908
1K_5%
C9426
0.047uF_16v
C9608
0.047uF_16v
C9609
1uF_6.3V
U7010
SPKR_RIN+
SPKR_RIN-
SPKR_LIN+
SPKR_LIN-
BYPASS
HP_EN
SPKR_EN#
HP_INR
HP_INL
REG_EN
REG_OUT
LOUT-
LOUT+
ROUT-
ROUT+
GAIN0
GAIN1
HP_OUTL
HP_OUTR
C1P
C1N
C9611
0.047uF_16v
C9612
0.047uF_16v
(35/15)
SPK_OUT_R-
SPK_OUT_R+
CN6012
ACES_87213_0200_2P
C9455
100pF_50v
C9458
100pF_50v
Colse to internal speaker.
R9816
100K_5%
R9818
100K_5%_OPEN
AMP_SHUT#
R9827
0_5%
R9909
0_5%
HP_OUT_R
HP_OUT_L
C9440
1uF_16v
R9812
60.4_1%
R9813
60.4_1%
L544
L545
BLM11A121S
HP_OUT_L_R
HP_OUT_R_R
HP_OUT_L_JACK
HP_OUT_R_JACK
C9451
100pF_50V
C9456
100pF_50V
R9810
20K_5%
R9811
20K_5%
JACK502
SIN_2SJ_C82014D3_6P
Earphone Jack
D2016
D2017
PHP_PESD5V0S1BB_SOD523_2P_OPEN
R9910
0_5%_OPEN
+VAUDIO_VCC
R9911
100K_5%
C9424
0.1uF_10V
C9429
10uF_6.3v
TI_TPA6041A4RHBR_QFN_32P
C9433
1uF_16v
SGND1
C9469
1uF_16V
For EMI

INVENTEC

TITLE VV Discrete AUDIO CODEC

SIZE	CODE	DOC. NUMBER	REV
A3	CS	1310A22294-0-MTR	A01

CHANGE by Chang, Roger 4-Sep-2008

SHEET 41 OF 54

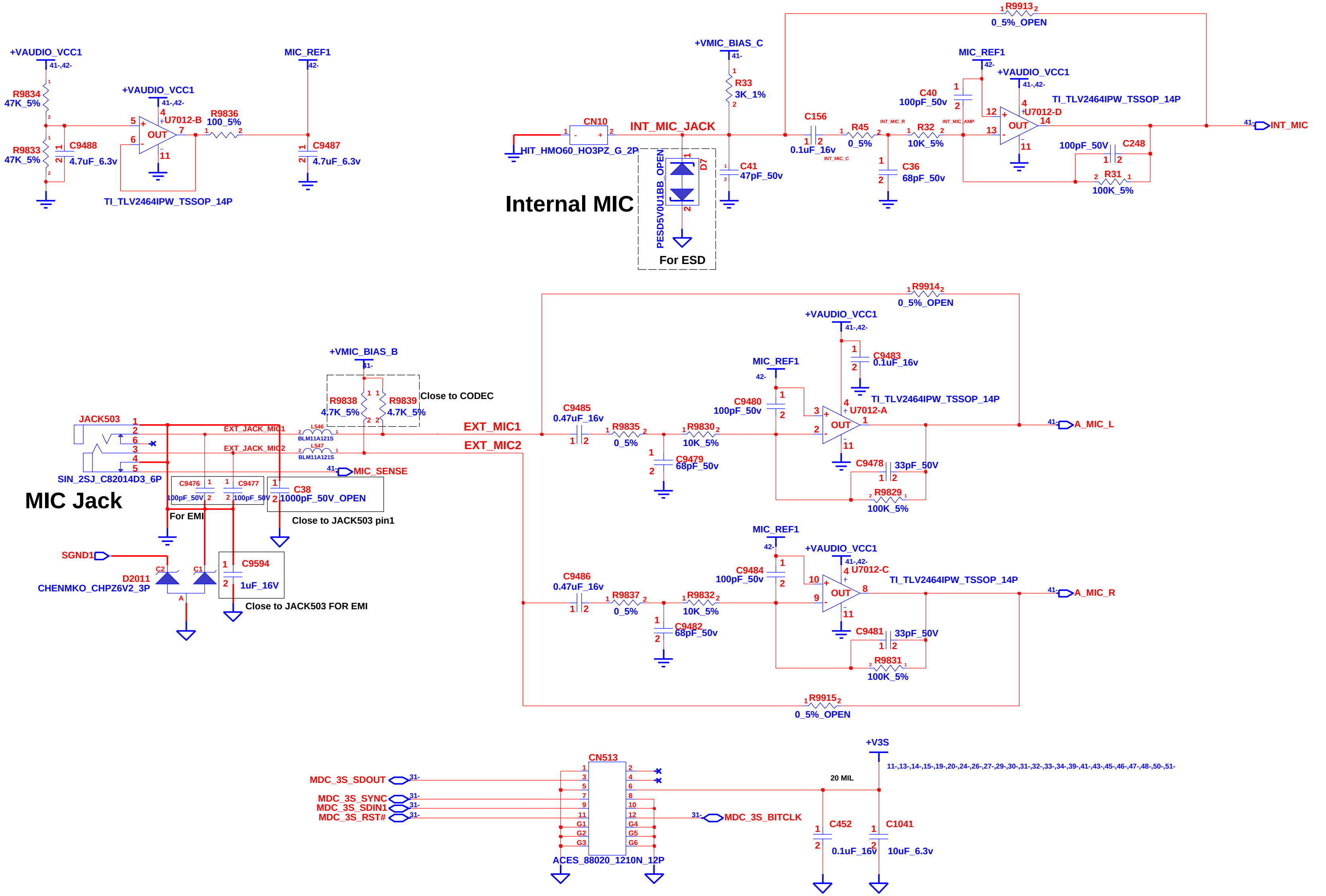

+VAUDIO_VCC1
R9834
47K_5%
R9833
47K_5%
C9488
4.7uF_6.3v
+VAUDIO_VCC1
U7012-B
OUT
R9836
100_5%
MIC_REF1
C9487
4.7uF_6.3v
TI_TLV2464IPW_TSSOP_14P
+VMIC_BIAS_C
R33
3K_1%
CN10
HIT_HMO60_HO3PZ_G_2P
INT_MIC_JACK
D7
PESD5V0U1BB_OPEN
For ESD
Internal MIC
C41
47pF_50v
C156
0.1uF_16v
R45
0_5%
R32
10K_5%
C36
68pF_50v
R9913
0_5%_OPEN
MIC_REF1
+VAUDIO_VCC1
C40
100pF_50v
TI_TLV2464IPW_TSSOP_14P
U7012-D
OUT
C248
100pF_50V
R31
100K_5%
INT_MIC
R9914
0_5%_OPEN
+VMIC_BIAS_B
R9838
4.7K_5%
R9839
4.7K_5%
Close to CODEC
JACK503
EXT_JACK_MIC1
EXT_JACK_MIC2
L546
L547
BLM11A121S
EXT_MIC1
EXT_MIC2
MIC_SENSE
SIN_2SJ_C82014D3_6P
MIC Jack
C9476
100pF_50V
C9477
100pF_50V
For EMI
C38
1000pF_50V_OPEN
Close to JACK503 pin1
SGND1
D2011
CHENMKO_CHPZ6V2_3P
C9594
1uF_16V
Close to JACK503 FOR EMI
C9485
0.47uF_16v
R9835
0_5%
R9830
10K_5%
C9479
68pF_50v
MIC_REF1
C9480
100pF_50v
+VAUDIO_VCC1
C9483
0.1uF_16v
TI_TLV2464IPW_TSSOP_14P
U7012-A
OUT
C9478
33pF_50V
R9829
100K_5%
A_MIC_L
MIC_REF1
C9484
100pF_50v
+VAUDIO_VCC1
U7012-C
TI_TLV2464IPW_TSSOP_14P
C9486
0.47uF_16v
R9837
0_5%
R9832
10K_5%
C9482
68pF_50v
C9481
33pF_50V
R9831
100K_5%
A_MIC_R
R9915
0_5%_OPEN
CN513
MDC_3S_SDOUT
MDC_3S_SYNC
MDC_3S_SDIN1
MDC_3S_RST#
MDC_3S_BITCLK
ACES_88020_1210N_12P
+V3S
11-,13-,14-,15-,19-,20-,24-,26-,27-,29-,30-,31-,32-,33-,34-,39-,41-,43-,45-,46-,47-,48-,50-,51-
20 MIL
C452
0.1uF_16v
C1041
10uF_6.3v

MDC CNTR

INVENTEC

TITLE VV Discrete
MDC CNTR

SIZE	CODE	DOC. NUMBER	REV
A3	CS	1310A22294-0-MTR	A01

CHANGE by Chang, Roger 14-Oct-2008
SHEET 42 OF 54

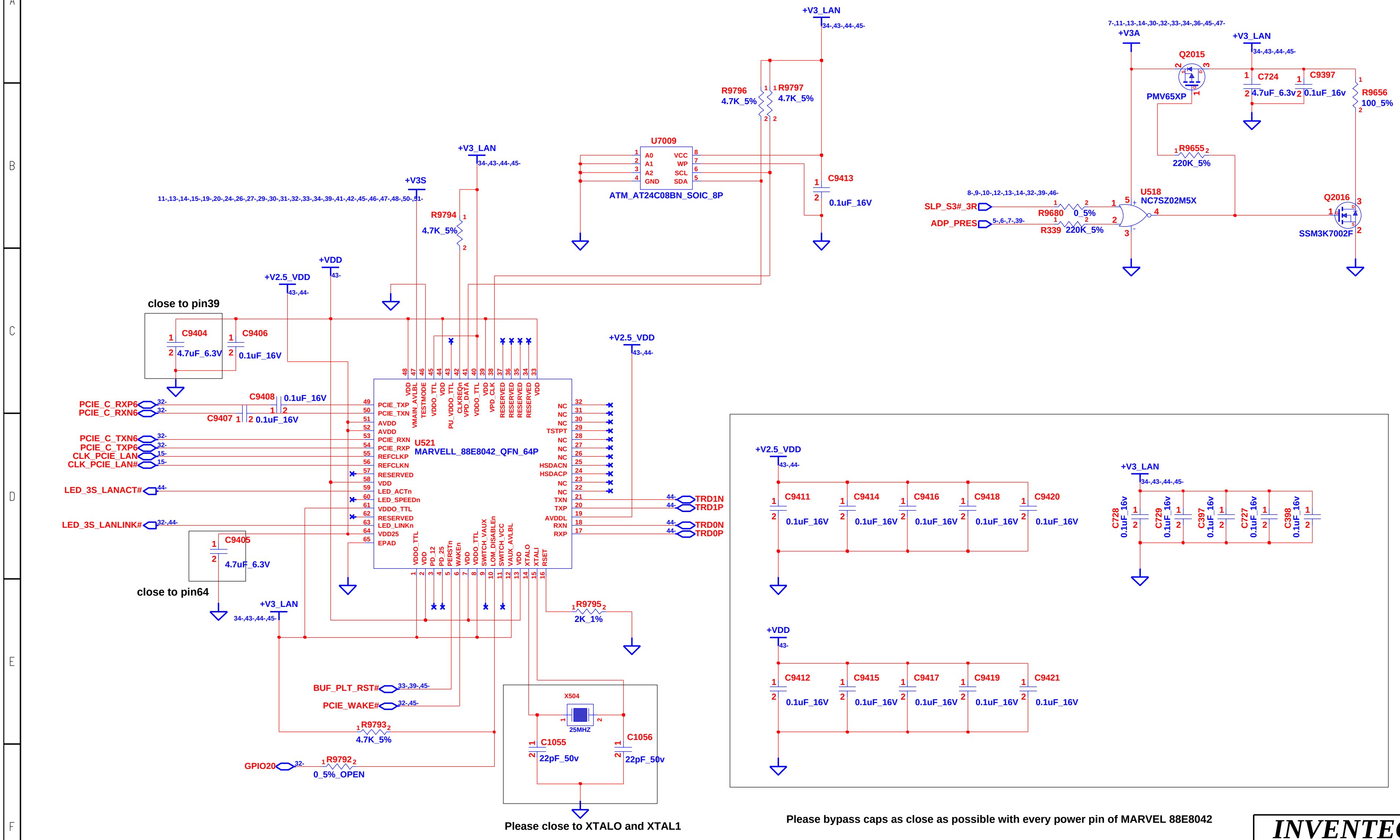

+V3_LAN
34-,43-,44-,45-
R9796
4.7K_5%
R9797
4.7K_5%
U7009
A0
A1
A2
GND
VCC
WP
SCL
SDA
ATM_AT24C08BN_SOIC_8P
C9413
0.1uF_16V
+V3_LAN
34-,43-,44-,45-
+V3S
11-,13-,14-,15-,19-,20-,24-,26-,27-,29-,30-,31-,32-,33-,34-,39-,41-,42-,45-,46-,47-,48-,50-,51-
R9794
4.7K_5%
+VDD
43-
+V2.5_VDD
43-,44-
C9404
4.7uF_6.3V
C9406
0.1uF_16V
C9408
0.1uF_16V
C9407
0.1uF_16V
PCIE_C_RXP6
PCIE_C_RXN6
PCIE_C_TXN6
PCIE_C_TXP6
CLK_PCIE_LAN
CLK_PCIE_LAN#
LED_3S_LANACT#
LED_3S_LANLINK#
32-
15-
44-
32-,44-
C9405
4.7uF_6.3V
U521
MARVELL_88E8042_QFN_64P
48 VDD
47 VMAIN_AVLBL
46 TESTMODE
45 VDDO_TTL
44 VDD
43 PU_VDDO_TTL
42 CLKREQn
41 VPD_DATA
40 VDDO_TTL
39 VDD
38 VPD_CLK
37 RESERVED
36 RESERVED
35 RESERVED
34 RESERVED
33 VDD
49 PCIE_TXP
50 PCIE_TXN
51 AVDD
52 AVDD
53 PCIE_RXN
54 PCIE_RXP
55 REFCLKP
56 REFCLKN
57 RESERVED
58 VDD
59 LED_ACTn
60 LED_SPEEDn
61 VDDO_TTL
62 RESERVED
63 LED_LINKn
64 VDD25
65 EPAD
32 NC
31 NC
30 NC
29 TSTPT
28 NC
27 NC
26 NC
25 HSDACN
24 HSDACP
23 NC
22 NC
21 TXN
20 TXP
19 AVDDL
18 RXN
17 RXP
1 VDDO_TTL
2 VDD
3 PD_12
4 PD_25
5 PERSTn
6 WAKEn
7 VDD
8 VDDO_TTL
9 SWITCH_VAUX
10 LOM_DISABLEn
11 SWITCH_VCC
12 VAUX_AVLBL
13 VDD
14 XTALO
15 XTALI
16 RSET
+V2.5_VDD
43-,44-
TRD1N
TRD1P
TRD0N
TRD0P
44-
R9795
2K_1%
+V3_LAN
34-,43-,44-,45-
BUF_PLT_RST#
33-,39-,45-
PCIE_WAKE#
32-,45-
R9793
4.7K_5%
GPIO20
R9792
0_5%_OPEN
X504
25MHZ
C1055
22pF_50v
C1056
22pF_50v
7-,11-,13-,14-,30-,32-,33-,34-,36-,45-,47-
+V3A
Q2015
PMV65XP
+V3_LAN
34-,43-,44-,45-
C724
4.7uF_6.3v
C9397
0.1uF_16v
R9656
100_5%
R9655
220K_5%
8-,9-,10-,12-,13-,14-,32-,39-,46-
SLP_S3#_3R
ADP_PRES
5-,6-,7-,39-
R9680
0_5%
R339
220K_5%
U518
NC7SZ02M5X
Q2016
SSM3K7002F
+V2.5_VDD
43-,44-
C9411
C9414
C9416
C9418
C9420
0.1uF_16V
+V3_LAN
34-,43-,44-,45-
C728
C729
C397
C727
C398
0.1uF_16v
+VDD
43-
C9412
C9415
C9417
C9419
C9421
0.1uF_16V

close to pin39

close to pin64

Please close to XTALO and XTAL1

Please bypass caps as close as possible with every power pin of MARVEL 88E8042

INVENTEC

TITLE VV Discrete

NIC 10/100- CONTROLLER

SIZE	CODE	DOC. NUMBER	REV
A3	CS	1310A22294-0-MTR	A01

CHANGE by Chang, Roger 16-Nov-2008

SHEET 43 OF 54

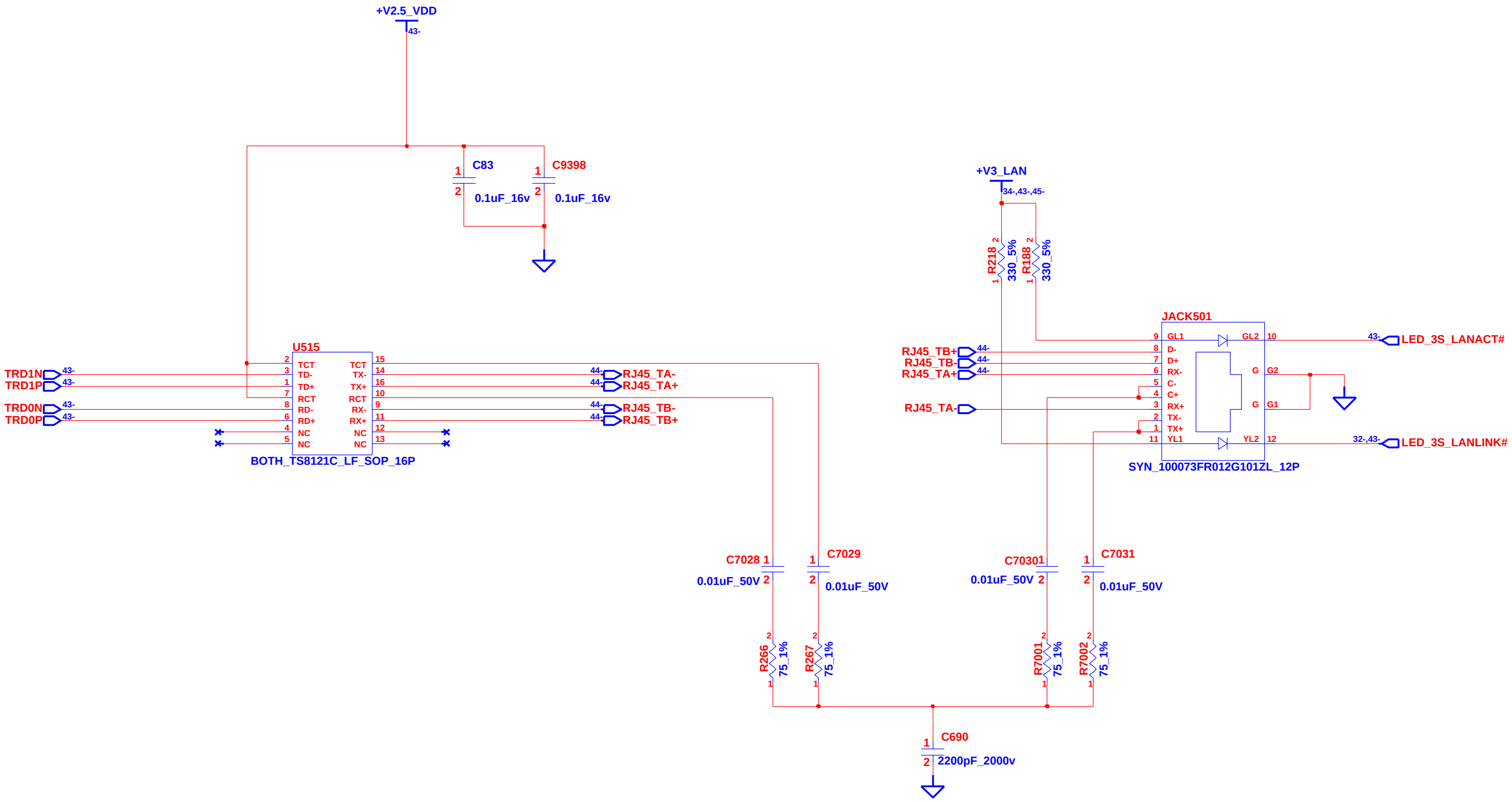
+V2.5_VDD
43-
C83
0.1uF_16v
C9398
0.1uF_16v
U515
BOTH_TS8121C_LF_SOP_16P
TCT
TD-
TD+
RCT
RD-
RD+
NC
NC
TCT
TX-
TX+
RCT
RX-
RX+
NC
NC
TRD1N
TRD1P
TRD0N
TRD0P
RJ45_TA-
RJ45_TA+
RJ45_TB-
RJ45_TB+
C7028
0.01uF_50V
C7029
0.01uF_50V
C7030
0.01uF_50V
C7031
0.01uF_50V
R266
75_1%
R267
75_1%
R7001
75_1%
R7002
75_1%
C690
2200pF_2000v
+V3_LAN
34-,43-,45-
R218
330_5%
R188
330_5%
JACK501
SYN_100073FR012G101ZL_12P
GL1
D-
D+
RX-
C-
C+
RX+
TX-
TX+
YL1
GL2
G
G2
G
G1
YL2
RJ45_TB+
RJ45_TB-
RJ45_TA+
RJ45_TA-
LED_3S_LANACT#
LED_3S_LANLINK#
32-,43-

INVENTEC

TITLE *VV Discrete*
NIC 10/100- RJ45

SIZE	CODE	DOC. NUMBER	REV
A3	CS	*1310A22294-0-MTR*	*A01*

CHANGE by *Chang, Roger* *4-Nov-2008* SHEET 44 OF 54

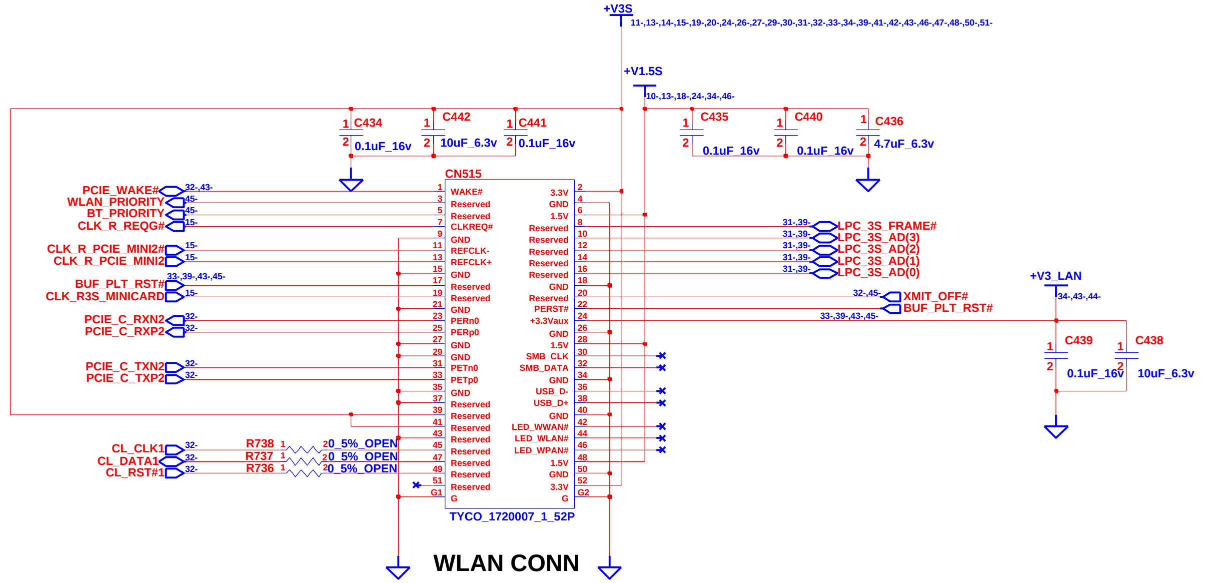
+V3S
11-,13-,14-,15-,19-,20-,24-,26-,27-,29-,30-,31-,32-,33-,34-,39-,41-,42-,43-,46-,47-,48-,50-,51-
+V1.5S
10-,13-,18-,24-,34-,46-
C434 0.1uF_16v
C442 10uF_6.3v
C441 0.1uF_16v
C435 0.1uF_16v
C440 0.1uF_16v
C436 4.7uF_6.3v
CN515
TYCO_1720007_1_52P
PCIE_WAKE# 32-,43-
WLAN_PRIORITY 45-
BT_PRIORITY 45-
CLK_R_REQG# 15-
CLK_R_PCIE_MINI2# 15-
CLK_R_PCIE_MINI2 15-
BUF_PLT_RST# 33-,39-,43-,45-
CLK_R3S_MINICARD 15-
PCIE_C_RXN2 32-
PCIE_C_RXP2 32-
PCIE_C_TXN2 32-
PCIE_C_TXP2 32-
CL_CLK1 32-
CL_DATA1 32-
CL_RST#1 32-
R738 0_5%_OPEN
R737 0_5%_OPEN
R736 0_5%_OPEN
1 WAKE#
3 Reserved
5 Reserved
7 CLKREQ#
9 GND
11 REFCLK-
13 REFCLK+
15 GND
17 Reserved
19 Reserved
21 GND
23 PERn0
25 PERp0
27 GND
29 GND
31 PETn0
33 PETp0
35 GND
37 Reserved
39 Reserved
41 Reserved
43 Reserved
45 Reserved
47 Reserved
49 Reserved
51 Reserved
G1 G
2 3.3V
4 GND
6 1.5V
8 Reserved
10 Reserved
12 Reserved
14 Reserved
16 Reserved
18 GND
20 Reserved
22 PERST#
24 +3.3Vaux
26 GND
28 1.5V
30 SMB_CLK
32 SMB_DATA
34 GND
36 USB_D-
38 USB_D+
40 GND
42 LED_WWAN#
44 LED_WLAN#
46 LED_WPAN#
48 1.5V
50 GND
52 3.3V
G2 G
31-,39- LPC_3S_FRAME#
31-,39- LPC_3S_AD(3)
31-,39- LPC_3S_AD(2)
31-,39- LPC_3S_AD(1)
31-,39- LPC_3S_AD(0)
32-,45- XMIT_OFF#
BUF_PLT_RST#
33-,39-,43-,45-
+V3_LAN
34-,43-,44-
C439 0.1uF_16v
C438 10uF_6.3v

WLAN CONN

R261,R262,R263,R264,R265 place as close to LPC signal as possible to minimize stub length for LPC bus
(will be NI for FCS)

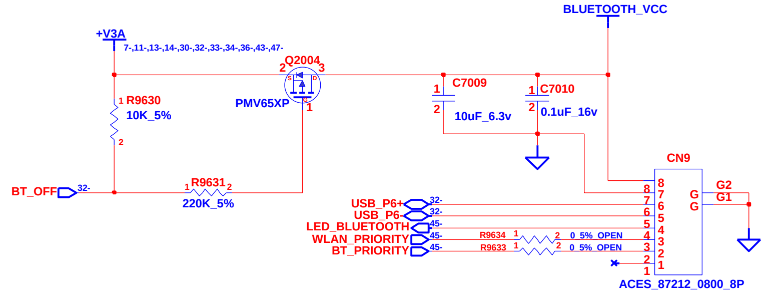
+V3A
7-,11-,13-,14-,30-,32-,33-,34-,36-,43-,47-
Q2004
PMV65XP
R9630 10K_5%
R9631 220K_5%
BT_OFF 32-
BLUETOOTH_VCC
C7009 10uF_6.3v
C7010 0.1uF_16v
CN9
ACES_87212_0800_8P
USB_P6+ 32-
USB_P6- 32-
LED_BLUETOOTH 45-
WLAN_PRIORITY 45-
BT_PRIORITY 45-
R9634 0_5%_OPEN
R9633 0_5%_OPEN
G2
G1

BLUETOOTH CONN

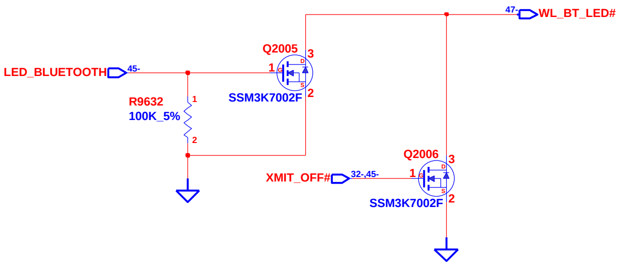
47- WL_BT_LED#
LED_BLUETOOTH 45-
Q2005
SSM3K7002F
R9632 100K_5%
XMIT_OFF# 32-,45-
Q2006
SSM3K7002F

INVENTEC

TITLE *VV Discrete*
MINICARD CONN & BLUETOOTH

SIZE	CODE	DOC. NUMBER	REV
A3	CS	*1310A22294-0-MTR*	*A01*

CHANGE by *Chang, Roger* *5-Nov-2008* SHEET 45 OF 54

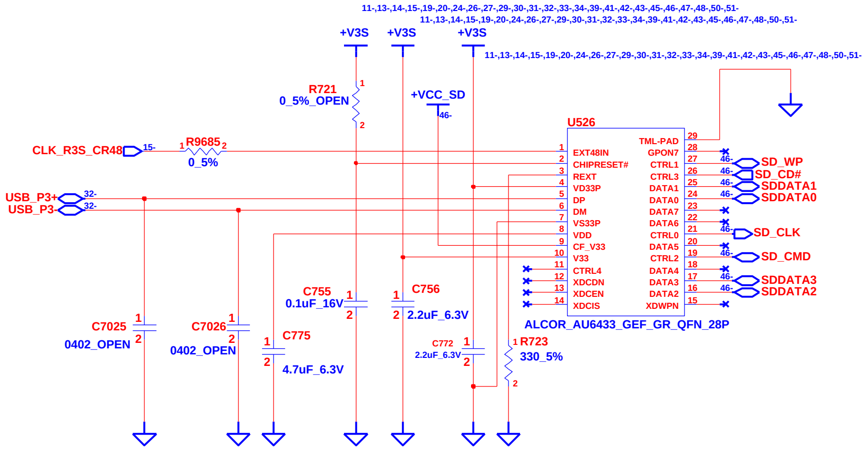
+V3S
+V3S
+V3S
+VCC_SD
R721
0_5%_OPEN
CLK_R3S_CR48
R9685
0_5%
USB_P3+
USB_P3-
U526
EXT48IN
CHIPRESET#
REXT
VD33P
DP
DM
VS33P
VDD
CF_V33
V33
CTRL4
XDCDN
XDCEN
XDCIS
TML-PAD
GPON7
CTRL1
CTRL3
DATA1
DATA0
DATA7
DATA6
CTRL0
DATA5
CTRL2
DATA4
DATA3
DATA2
XDWPN
SD_WP
SD_CD#
SDDATA1
SDDATA0
SD_CLK
SD_CMD
SDDATA3
SDDATA2
ALCOR_AU6433_GEF_GR_QFN_28P
C7025
0402_OPEN
C7026
0402_OPEN
C775
4.7uF_6.3V
C755
0.1uF_16V
C756
2.2uF_6.3V
C772
2.2uF_6.3V
R723
330_5%
11-,13-,14-,15-,19-,20-,24-,26-,27-,29-,30-,31-,32-,33-,34-,39-,41-,42-,43-,45-,46-,47-,48-,50-,51-

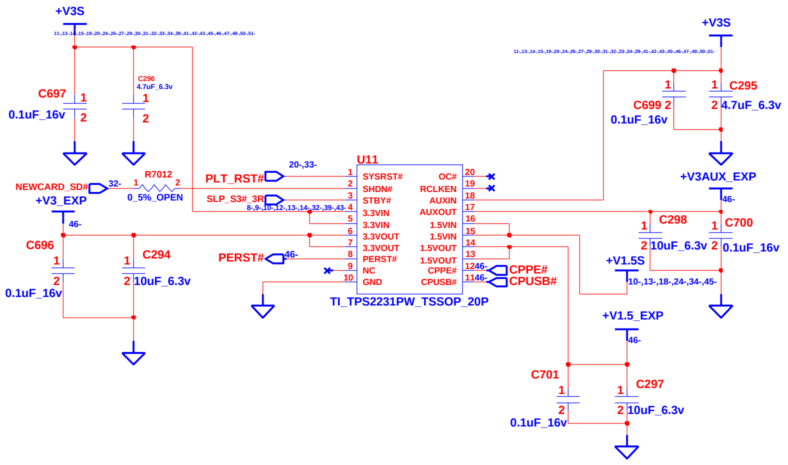
+V3S
C697
0.1uF_16v
C296
4.7uF_6.3v
NEWCARD_SD#
R7012
0_5%_OPEN
+V3_EXP
C696
0.1uF_16v
C294
10uF_6.3v
PLT_RST#
SLP_S3#_3R
PERST#
U11
SYSRST#
SHDN#
STBY#
3.3VIN
3.3VIN
3.3VOUT
3.3VOUT
PERST#
NC
GND
OC#
RCLKEN
AUXIN
AUXOUT
1.5VIN
1.5VIN
1.5VOUT
1.5VOUT
CPPE#
CPUSB#
TI_TPS2231PW_TSSOP_20P
+V3S
C699
0.1uF_16v
C295
4.7uF_6.3v
+V3AUX_EXP
C298
10uF_6.3v
C700
0.1uF_16v
+V1.5S
+V1.5_EXP
C701
0.1uF_16v
C297
10uF_6.3v

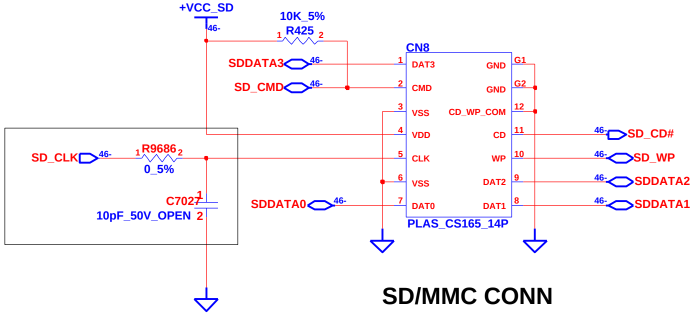
+VCC_SD
10K_5%
R425
SDDATA3
SD_CMD
SD_CLK
R9686
0_5%
C7027
10pF_50V_OPEN
SDDATA0
CN8
DAT3
CMD
VSS
VDD
CLK
VSS
DAT0
GND
GND
CD_WP_COM
CD
WP
DAT2
DAT1
PLAS_CS165_14P
SD_CD#
SD_WP
SDDATA2
SDDATA1

SD/MMC CONN

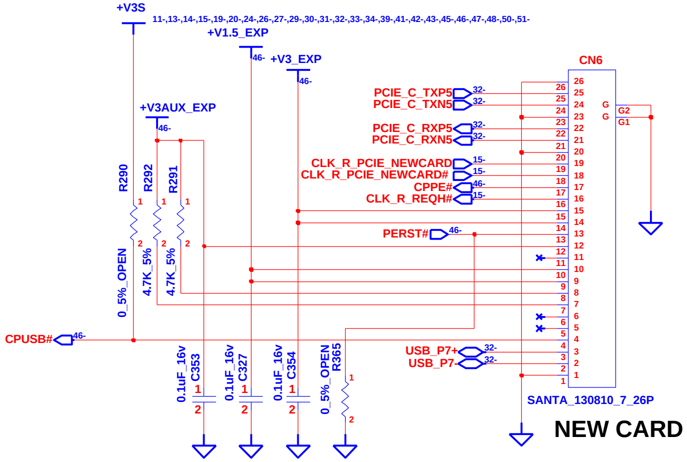
+V3S
11-,13-,14-,15-,19-,20-,24-,26-,27-,29-,30-,31-,32-,33-,34-,39-,41-,42-,43-,45-,46-,47-,48-,50-,51-
+V1.5_EXP
+V3_EXP
+V3AUX_EXP
R290
0_5%_OPEN
R292
4.7K_5%
R291
4.7K_5%
CPUSB#
C353
0.1uF_16v
C327
0.1uF_16v
C354
0.1uF_16v
R365
0_5%_OPEN
CN6
PCIE_C_TXP5
PCIE_C_TXN5
PCIE_C_RXP5
PCIE_C_RXN5
CLK_R_PCIE_NEWCARD
CLK_R_PCIE_NEWCARD#
CPPE#
CLK_R_REQH#
PERST#
USB_P7+
USB_P7-
SANTA_130810_7_26P

NEW CARD CONN

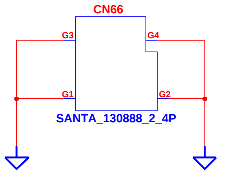
CN66
G3
G4
G1
G2
SANTA_130888_2_4P

NEW CARD HOUSING

INVENTEC

TITLE *VV Discrete*
NEW CARD & SD/MMC

SIZE	CODE	DOC. NUMBER	REV
A3	CS	1310A22294-0-MTR	A01

CHANGE by *Chang, Roger* *20-Nov-2008*
SHEET 46 OF 54

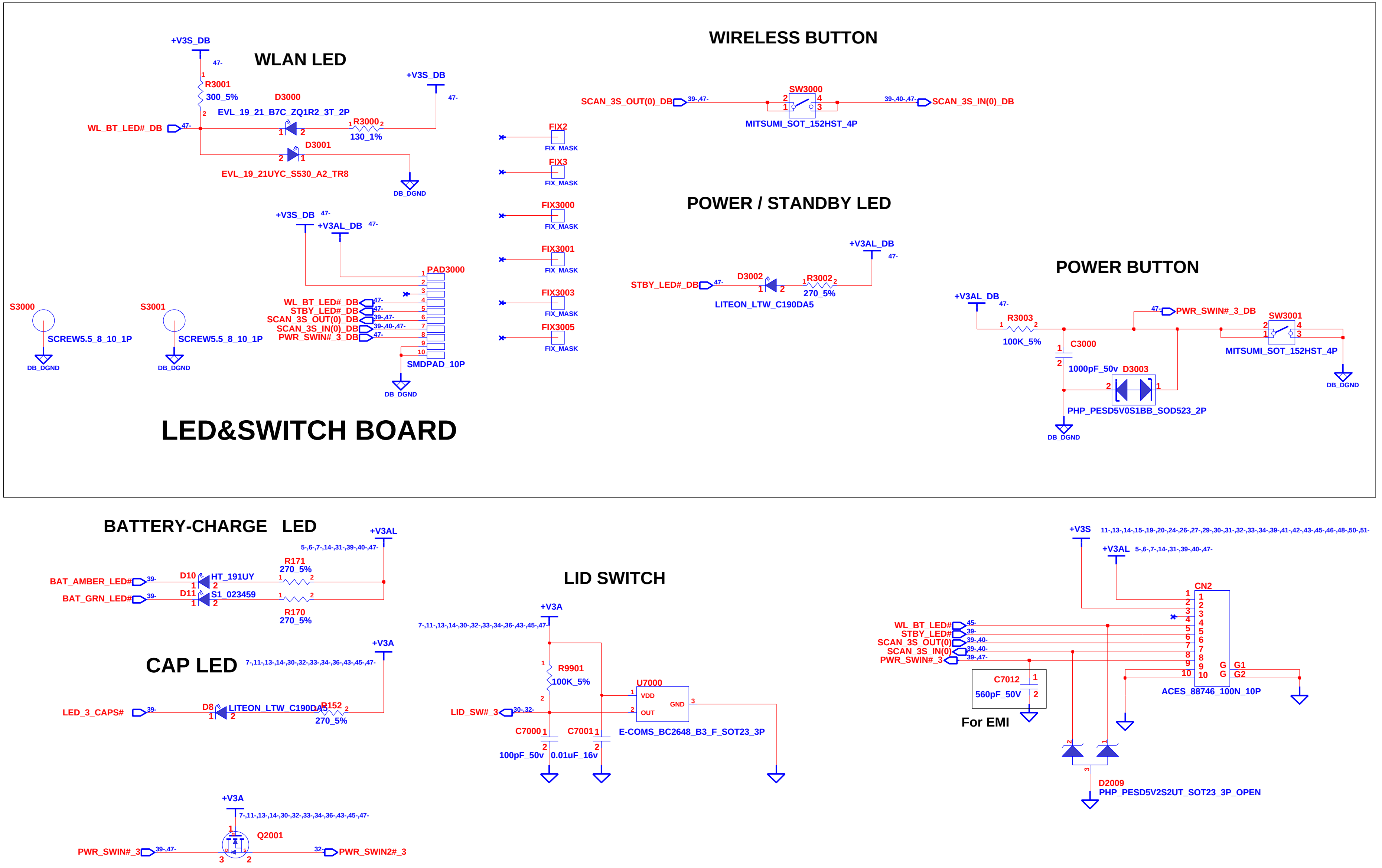
WLAN LED
+V3S_DB
47-
R3001
300_5%
D3000
EVL_19_21_B7C_ZQ1R2_3T_2P
R3000
130_1%
+V3S_DB
47-
WL_BT_LED#_DB
47-
D3001
EVL_19_21UYC_S530_A2_TR8
DB_DGND
FIX2
FIX_MASK
FIX3
FIX_MASK
FIX3000
FIX_MASK
FIX3001
FIX_MASK
FIX3003
FIX_MASK
FIX3005
FIX_MASK
+V3S_DB 47-
+V3AL_DB 47-
PAD3000
WL_BT_LED#_DB 47-
STBY_LED#_DB 47-
SCAN_3S_OUT(0)_DB 39-,47-
SCAN_3S_IN(0)_DB 39-,40-,47-
PWR_SWIN#_3_DB 47-
SMDPAD_10P
DB_DGND
S3000
SCREW5.5_8_10_1P
DB_DGND
S3001
SCREW5.5_8_10_1P
DB_DGND
LED&SWITCH BOARD
WIRELESS BUTTON
SCAN_3S_OUT(0)_DB 39-,47-
SW3000
MITSUMI_SOT_152HST_4P
39-,40-,47- SCAN_3S_IN(0)_DB
POWER / STANDBY LED
+V3AL_DB 47-
STBY_LED#_DB 47-
D3002
R3002
270_5%
LITEON_LTW_C190DA5
POWER BUTTON
+V3AL_DB 47-
R3003
100K_5%
C3000
1000pF_50v
D3003
PHP_PESD5V0S1BB_SOD523_2P
DB_DGND
47- PWR_SWIN#_3_DB
SW3001
MITSUMI_SOT_152HST_4P
DB_DGND
BATTERY-CHARGE LED
+V3AL
5-,6-,7-,14-,31-,39-,40-,47-
R171
270_5%
BAT_AMBER_LED# 39-
D10
HT_191UY
BAT_GRN_LED# 39-
D11
S1_023459
R170
270_5%
CAP LED
+V3A
7-,11-,13-,14-,30-,32-,33-,34-,36-,43-,45-,47-
LED_3_CAPS# 39-
D8
LITEON_LTW_C190DA5
R152
270_5%
+V3A
7-,11-,13-,14-,30-,32-,33-,34-,36-,43-,45-,47-
PWR_SWIN#_3 39-,47-
Q2001
SSM3K7002F
32- PWR_SWIN2#_3
LID SWITCH
+V3A
7-,11-,13-,14-,30-,32-,33-,34-,36-,43-,45-,47-
R9901
100K_5%
U7000
VDD
OUT
GND
LID_SW#_3 30-,32-
C7000
100pF_50v
C7001
0.01uF_16v
E-COMS_BC2648_B3_F_SOT23_3P
+V3S
11-,13-,14-,15-,19-,20-,24-,26-,27-,29-,30-,31-,32-,33-,34-,39-,41-,42-,43-,45-,46-,48-,50-,51-
+V3AL 5-,6-,7-,14-,31-,39-,40-,47-
CN2
WL_BT_LED# 45-
STBY_LED# 39-
SCAN_3S_OUT(0) 39-,40-
SCAN_3S_IN(0) 39-,40-
PWR_SWIN#_3 39-,47-
C7012
560pF_50V
For EMI
G1
G2
ACES_88746_100N_10P
D2009
PHP_PESD5V2S2UT_SOT23_3P_OPEN

INVENTEC

TITLE *VV Discrete*
BUTTON & LED

SIZE	CODE	DOC. NUMBER	REV
A3	CS	1310A22294-0-MTR	A01

CHANGE by *Chang, Roger* *25-Dec-2008* SHEET 47 OF 54

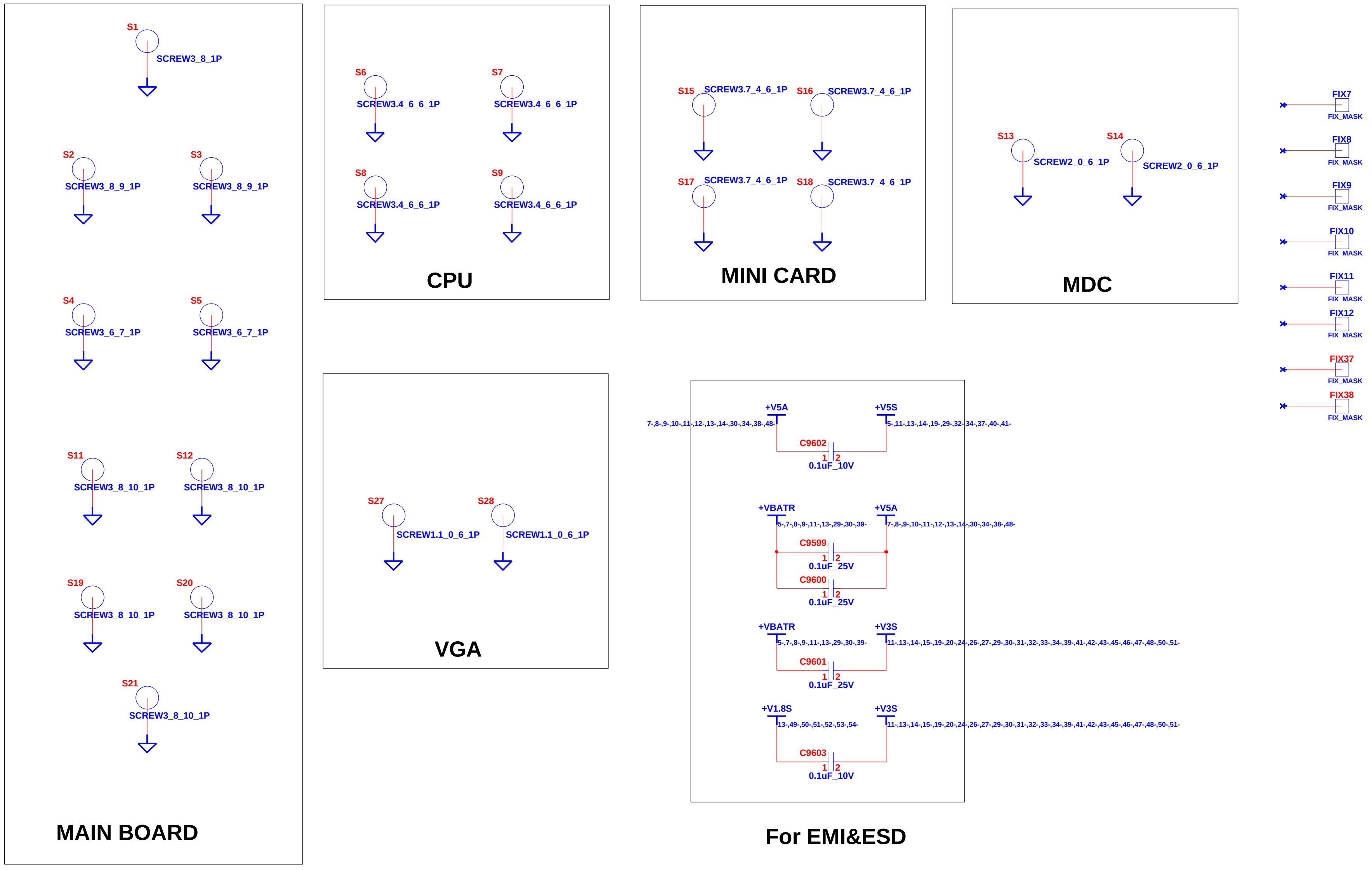
S1
SCREW3_8_1P
S2
SCREW3_8_9_1P
S3
SCREW3_8_9_1P
S4
SCREW3_6_7_1P
S5
SCREW3_6_7_1P
S11
SCREW3_8_10_1P
S12
SCREW3_8_10_1P
S19
SCREW3_8_10_1P
S20
SCREW3_8_10_1P
S21
SCREW3_8_10_1P
MAIN BOARD
S6
SCREW3.4_6_6_1P
S7
SCREW3.4_6_6_1P
S8
SCREW3.4_6_6_1P
S9
SCREW3.4_6_6_1P
CPU
S15
SCREW3.7_4_6_1P
S16
SCREW3.7_4_6_1P
S17
SCREW3.7_4_6_1P
S18
SCREW3.7_4_6_1P
MINI CARD
S13
SCREW2_0_6_1P
S14
SCREW2_0_6_1P
MDC
FIX7
FIX_MASK
FIX8
FIX_MASK
FIX9
FIX_MASK
FIX10
FIX_MASK
FIX11
FIX_MASK
FIX12
FIX_MASK
FIX37
FIX_MASK
FIX38
FIX_MASK
S27
SCREW1.1_0_6_1P
S28
SCREW1.1_0_6_1P
VGA
+V5A
7-,8-,9-,10-,11-,12-,13-,14-,30-,34-,38-,48-
+V5S
5-,11-,13-,14-,19-,29-,32-,34-,37-,40-,41-
C9602
1
2
0.1uF_10V
+VBATR
5-,7-,8-,9-,11-,13-,29-,30-,39-
+V5A
7-,8-,9-,10-,11-,12-,13-,14-,30-,34-,38-,48-
C9599
1
2
0.1uF_25V
C9600
1
2
0.1uF_25V
+VBATR
5-,7-,8-,9-,11-,13-,29-,30-,39-
+V3S
11-,13-,14-,15-,19-,20-,24-,26-,27-,29-,30-,31-,32-,33-,34-,39-,41-,42-,43-,45-,46-,47-,48-,50-,51-
C9601
1
2
0.1uF_25V
+V1.8S
13-,49-,50-,51-,52-,53-,54-
+V3S
11-,13-,14-,15-,19-,20-,24-,26-,27-,29-,30-,31-,32-,33-,34-,39-,41-,42-,43-,45-,46-,47-,48-,50-,51-
C9603
1
2
0.1uF_10V
For EMI&ESD

INVENTEC

TITLE *VV Discrete*
SCREW

SIZE	CODE	DOC. NUMBER	REV
A3	CS	*1310A22294-0-MTR*	*A01*

CHANGE by *Chang, Roger* *25-Nov-2008* SHEET 48 OF 54

STRAPS	PIN	Description of default settings	
TX_PWRS_ENB	GPIO0	PCIE full TX output swing.	0
TX_DEEMPH_EN	GPIO1	PCIE transmitter de-emphasis enabled.	0
BIF_DEBUG_ACCESS	GPIO4	Debug signals muxed out.	0
ROMIDCFG(0:3)	GPIO[11:13,9]	Memory aperture type	X X X X

X = DESIGN DEPENDANT

0 = DO NOT INSTALL RESISTOR

1 = INSTALL 10K RESISTOR

Table 1

GPIO_13	GPIO_12	GPIO_11	For DIS-GDDR2	
0	0	0	128M memory aperture	
0	0	1	256M memory aperture	(Default)
1	1	0	reserved	

POW_SW1	POW_SW0	+VDD_CORE
0	0	1.0V
0	1	0.95V
1	0	0.9V

Table 2

For DIS-GDDR2					
MEM_ID3	MEM_ID2	MEM_ID1	MEM_ID0	vendor	
0	1	0	1	samsung (256MB)	
0	1	1	0	Qimonda(256M)	(Default)
0	1	1	1	hynix (256MB)	

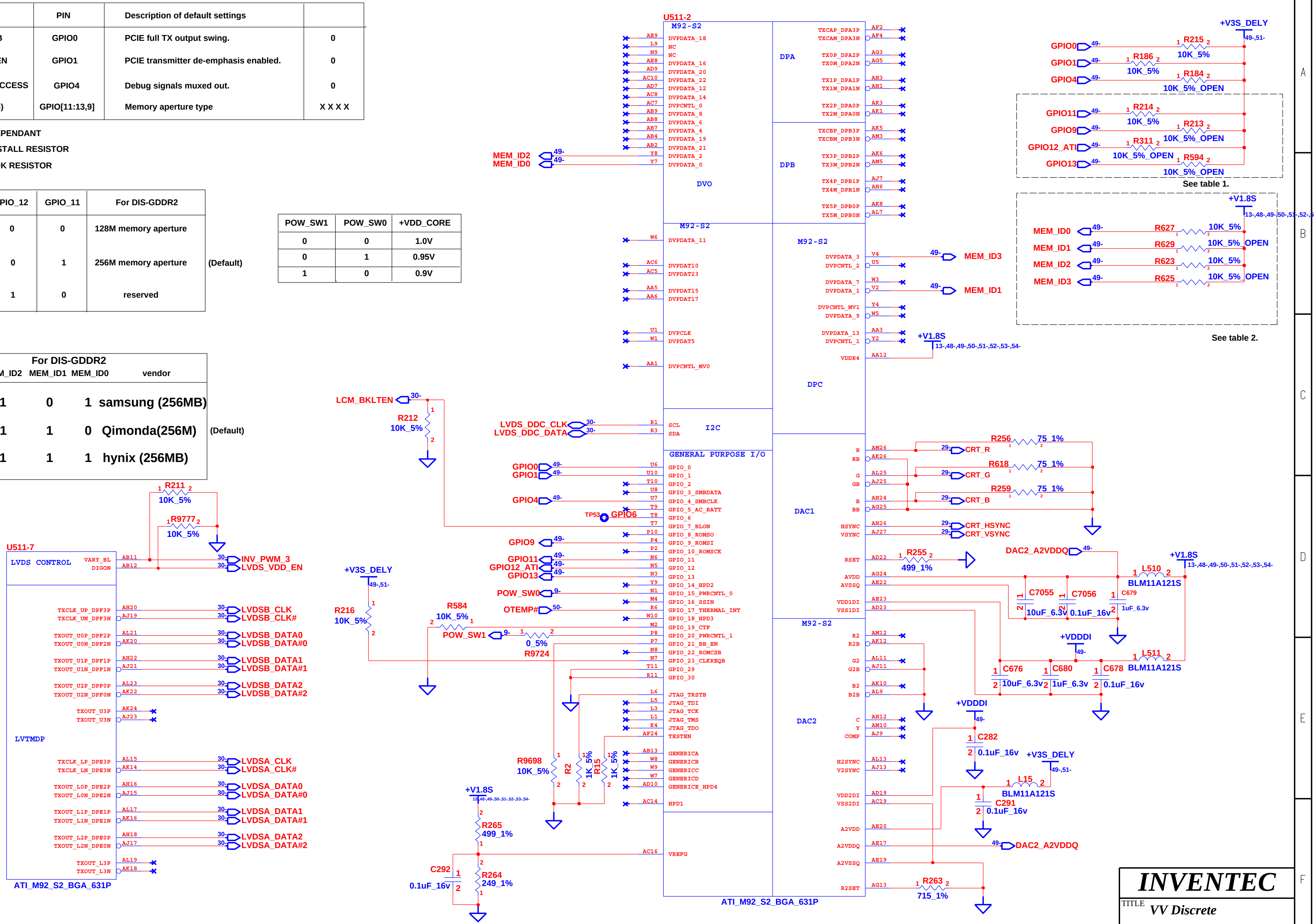
U511-2
M92-S2
DVO
DPA
DPB
DPC
I2C
GENERAL PURPOSE I/O
DAC1
DAC2
ATI_M92_S2_BGA_631P
U511-7
LVDS CONTROL
LVTMDP
ATI_M92_S2_BGA_631P
MEM_ID2
MEM_ID0
MEM_ID3
MEM_ID1
+V1.8S
+V3S_DELY
GPIO0
GPIO1
GPIO4
GPIO11
GPIO9
GPIO12_ATI
GPIO13
R215 10K_5%
R186 10K_5%
R184 10K_5%_OPEN
R214 10K_5%
R213 10K_5%_OPEN
R311 10K_5%_OPEN
R594 10K_5%_OPEN
See table 1.
R627 10K_5%
R629 10K_5%_OPEN
R623 10K_5%
R625 10K_5%_OPEN
See table 2.
LCM_BKLTEN
R212 10K_5%
LVDS_DDC_CLK
LVDS_DDC_DATA
TP53
GPIO6
POW_SW0
OTEMP#
POW_SW1
R584 10K_5%
R9724 0_5%
R216 10K_5%
R211 10K_5%
R9777 10K_5%
INV_PWM_3
LVDS_VDD_EN
LVDSB_CLK
LVDSB_CLK#
LVDSB_DATA0
LVDSB_DATA#0
LVDSB_DATA1
LVDSB_DATA#1
LVDSB_DATA2
LVDSB_DATA#2
LVDSA_CLK
LVDSA_CLK#
LVDSA_DATA0
LVDSA_DATA#0
LVDSA_DATA1
LVDSA_DATA#1
LVDSA_DATA2
LVDSA_DATA#2
R9698 10K_5%
R2 1K_5%
R15 1K_5%
R265 499_1%
R264 249_1%
C292 0.1uF_16v
R256 75_1%
R618 75_1%
R259 75_1%
CRT_R
CRT_G
CRT_B
CRT_HSYNC
CRT_VSYNC
R255 499_1%
DAC2_A2VDDQ
L510 BLM11A121S
C7055 10uF_6.3V
C7056 0.1uF_16v
C679 1uF_6.3v
+VDDDI
L511 BLM11A121S
C676 10uF_6.3v
C680 1uF_6.3v
C678 0.1uF_16v
C282 0.1uF_16v
L15 BLM11A121S
C291 0.1uF_16v
R263 715_1%

INVENTEC			
TITLE	VV Discrete		
SIZE A3	CODE CS	DOC. NUMBER 1310A22294-0-MTR	REV A01
CHANGE by Chang, Roger	4-Sep-2008	SHEET 49	OF 54

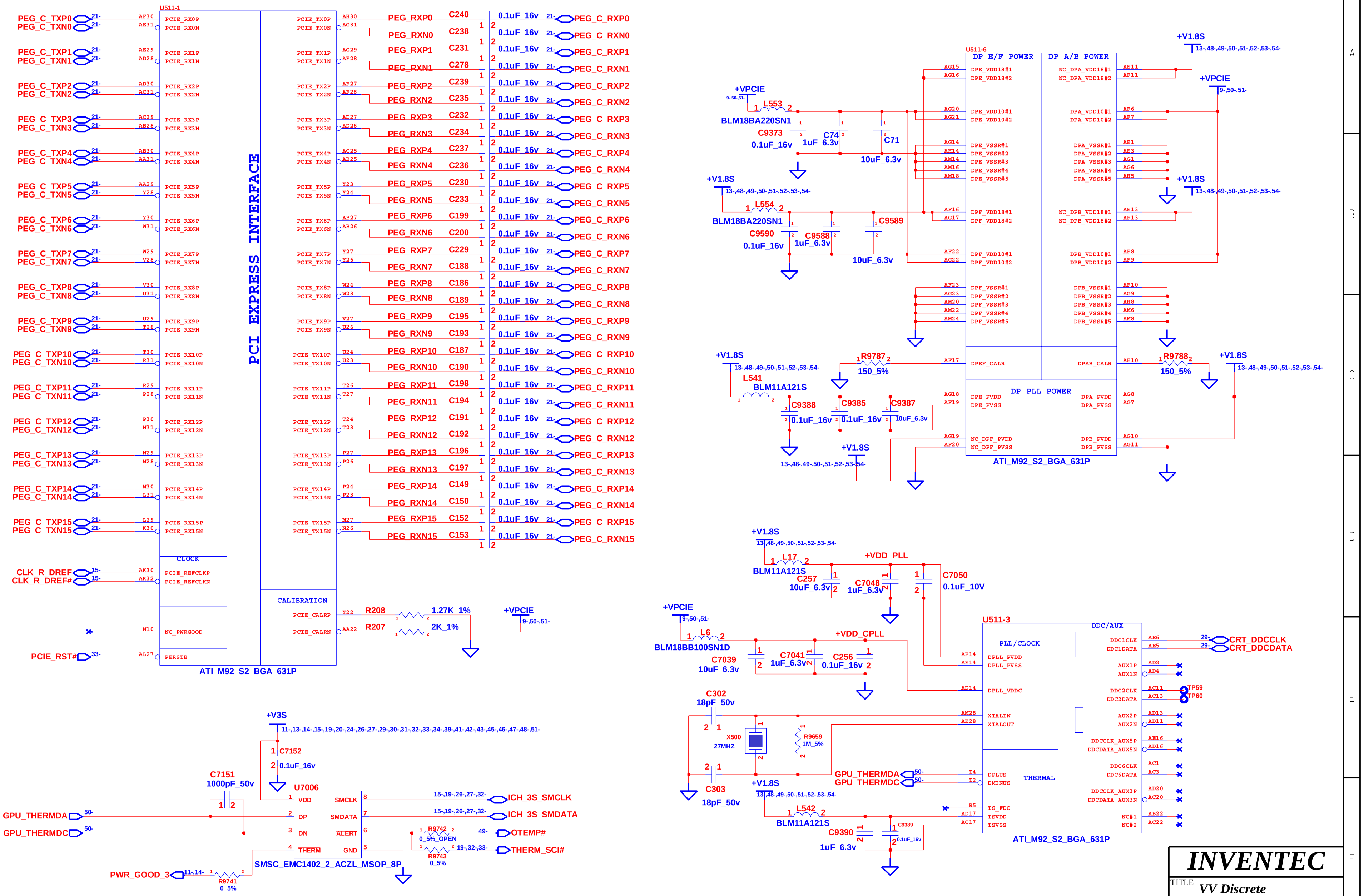
U511-1
PCI EXPRESS INTERFACE
PEG_C_TXP0
PEG_C_TXN0
PEG_C_TXP1
PEG_C_TXN1
PEG_C_TXP2
PEG_C_TXN2
PEG_C_TXP3
PEG_C_TXN3
PEG_C_TXP4
PEG_C_TXN4
PEG_C_TXP5
PEG_C_TXN5
PEG_C_TXP6
PEG_C_TXN6
PEG_C_TXP7
PEG_C_TXN7
PEG_C_TXP8
PEG_C_TXN8
PEG_C_TXP9
PEG_C_TXN9
PEG_C_TXP10
PEG_C_TXN10
PEG_C_TXP11
PEG_C_TXN11
PEG_C_TXP12
PEG_C_TXN12
PEG_C_TXP13
PEG_C_TXN13
PEG_C_TXP14
PEG_C_TXN14
PEG_C_TXP15
PEG_C_TXN15
PCIE_RX0P
PCIE_RX0N
PCIE_RX15P
PCIE_RX15N
PCIE_TX0P
PCIE_TX0N
PCIE_TX15P
PCIE_TX15N
CLOCK
PCIE_REFCLKP
PCIE_REFCLKN
CLK_R_DREF
CLK_R_DREF#
NC_PWRGOOD
PERSTB
PCIE_RST#
CALIBRATION
PCIE_CALRP
PCIE_CALRN
R208
1.27K_1%
R207
2K_1%
+VPCIE
9-,50-,51-
ATI_M92_S2_BGA_631P
PEG_RXP0
C240
PEG_RXN0
C238
PEG_RXP1
C231
PEG_RXN1
C278
PEG_RXP2
C239
PEG_RXN2
C235
PEG_RXP3
C232
PEG_RXN3
C234
PEG_RXP4
C237
PEG_RXN4
C236
PEG_RXP5
C230
PEG_RXN5
C233
PEG_RXP6
C199
PEG_RXN6
C200
PEG_RXP7
C229
PEG_RXN7
C188
PEG_RXP8
C186
PEG_RXN8
C189
PEG_RXP9
C195
PEG_RXN9
C193
PEG_RXP10
C187
PEG_RXN10
C190
PEG_RXP11
C198
PEG_RXN11
C194
PEG_RXP12
C191
PEG_RXN12
C192
PEG_RXP13
C196
PEG_RXN13
C197
PEG_RXP14
C149
PEG_RXN14
C150
PEG_RXP15
C152
PEG_RXN15
C153
0.1uF_16v
PEG_C_RXP0
PEG_C_RXN0
PEG_C_RXP1
PEG_C_RXN1
PEG_C_RXP2
PEG_C_RXN2
PEG_C_RXP3
PEG_C_RXN3
PEG_C_RXP4
PEG_C_RXN4
PEG_C_RXP5
PEG_C_RXN5
PEG_C_RXP6
PEG_C_RXN6
PEG_C_RXP7
PEG_C_RXN7
PEG_C_RXP8
PEG_C_RXN8
PEG_C_RXP9
PEG_C_RXN9
PEG_C_RXP10
PEG_C_RXN10
PEG_C_RXP11
PEG_C_RXN11
PEG_C_RXP12
PEG_C_RXN12
PEG_C_RXP13
PEG_C_RXN13
PEG_C_RXP14
PEG_C_RXN14
PEG_C_RXP15
PEG_C_RXN15
+V3S
11-,13-,14-,15-,19-,20-,24-,26-,27-,29-,30-,31-,32-,33-,34-,39-,41-,42-,43-,45-,46-,47-,48-,51-
C7152
0.1uF_16v
C7151
1000pF_50v
U7006
VDD
DP
DN
THERM
SMCLK
SMDATA
ALERT
GND
SMSC_EMC1402_2_ACZL_MSOP_8P
GPU_THERMDA
GPU_THERMDC
PWR_GOOD_3
11-,14-
R9741
0_5%
ICH_3S_SMCLK
15-,19-,26-,27-,32-
ICH_3S_SMDATA
R9742
0_5%_OPEN
OTEMP#
49-
R9743
0_5%
THERM_SCI#
19-,32-,33-
U511-6
DP E/F POWER
DP A/B POWER
DPE_VDD18#1
DPE_VDD18#2
DPE_VDD10#1
DPE_VDD10#2
DPE_VSSR#1
DPE_VSSR#2
DPE_VSSR#3
DPE_VSSR#4
DPE_VSSR#5
DPF_VDD18#1
DPF_VDD18#2
DPF_VDD10#1
DPF_VDD10#2
DPF_VSSR#1
DPF_VSSR#2
DPF_VSSR#3
DPF_VSSR#4
DPF_VSSR#5
NC_DPA_VDD18#1
NC_DPA_VDD18#2
DPA_VDD10#1
DPA_VDD10#2
DPA_VSSR#1
DPA_VSSR#2
DPA_VSSR#3
DPA_VSSR#4
DPA_VSSR#5
NC_DPB_VDD18#1
NC_DPB_VDD18#2
DPB_VDD10#1
DPB_VDD10#2
DPB_VSSR#1
DPB_VSSR#2
DPB_VSSR#3
DPB_VSSR#4
DPB_VSSR#5
DPEF_CALR
DPAB_CALR
DP PLL POWER
DPE_PVDD
DPE_PVSS
NC_DPF_PVDD
NC_DPF_PVSS
DPA_PVDD
DPA_PVSS
DPB_PVDD
DPB_PVSS
+V1.8S
13-,48-,49-,50-,51-,52-,53-,54-
L553
BLM18BA220SN1
C9373
0.1uF_16v
C74
1uF_6.3v
C71
10uF_6.3v
L554
C9590
C9588
C9589
R9787
150_5%
R9788
L541
BLM11A121S
C9388
C9385
C9387
10uF_6.3v
L17
+VDD_PLL
C257
C7048
1uF_6.3v
C7050
0.1uF_10V
L6
BLM18BB100SN1D
+VDD_CPLL
C7039
C7041
C256
U511-3
PLL/CLOCK
DPLL_PVDD
DPLL_PVSS
DPLL_VDDC
XTALIN
XTALOUT
THERMAL
DPLUS
DMINUS
TS_FDO
TSVDD
TSVSS
DDC/AUX
DDC1CLK
DDC1DATA
AUX1P
AUX1N
DDC2CLK
DDC2DATA
AUX2P
AUX2N
DDCCLK_AUX5P
DDCDATA_AUX5N
DDC6CLK
DDC6DATA
DDCCLK_AUX3P
DDCDATA_AUX3N
NC#1
NC#2
CRT_DDCCLK
CRT_DDCDATA
29-
TP59
TP60
C302
18pF_50v
C303
X500
27MHZ
R9659
1M_5%
L542
C9390
C9389
0.1uF_16v
1
2
3
4
5
6
7
8
A
B
C
D
E
F

INVENTEC

TITLE VV Discrete

SIZE	CODE	DOC. NUMBER	REV
A3	CS	1310A22294-0-MTR	A01

CHANGE by Chang, Roger 4-Sep-2008

SHEET 50 OF 54

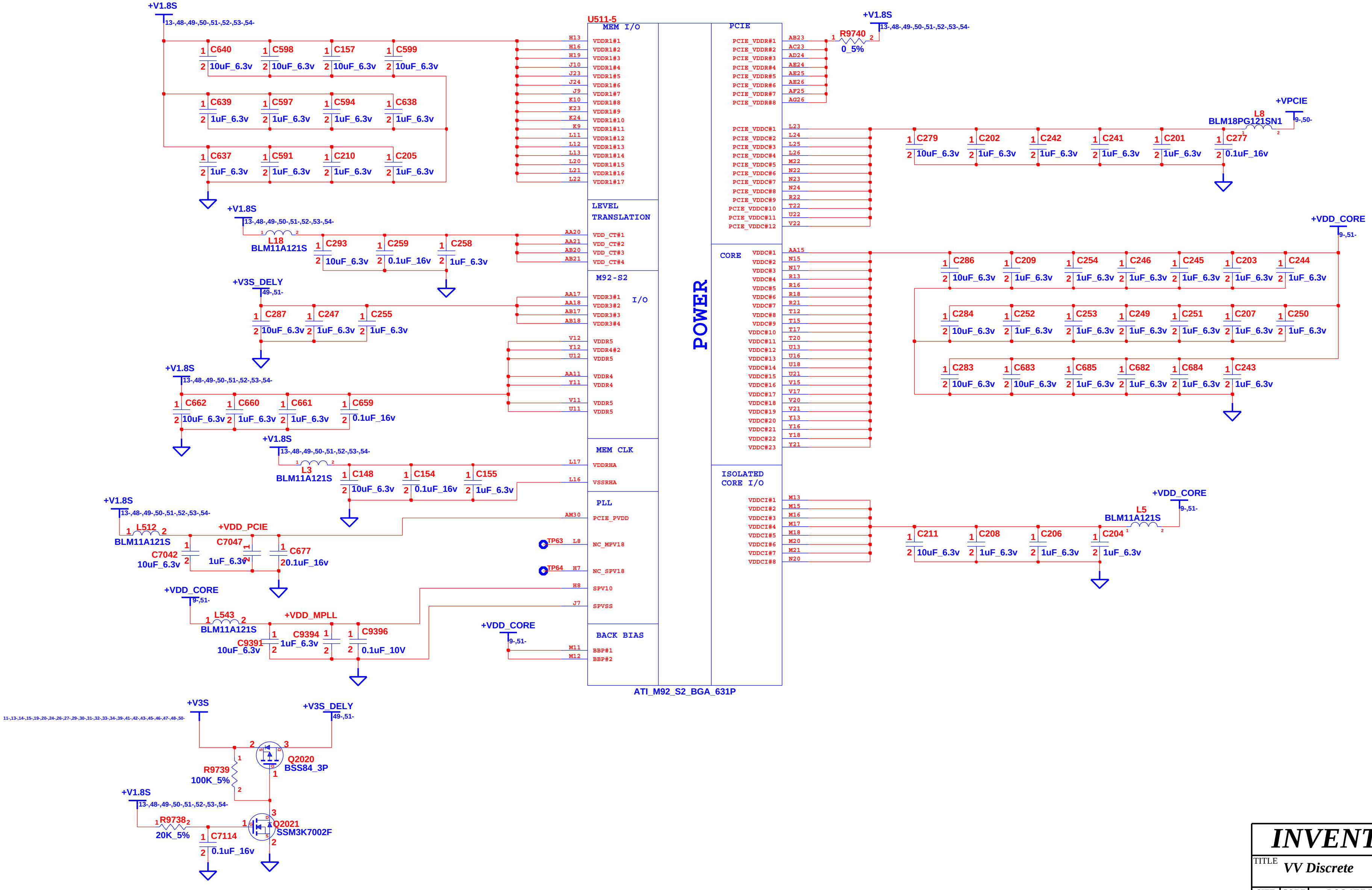

U511-5
ATI_M92_S2_BGA_631P
POWER
MEM I/O
VDDR1#1 … VDDR1#17
H13 H16 H19 J10 J23 J24 J9 K10 K23 K24 K9 L11 L12 L13 L20 L21 L22
LEVEL TRANSLATION
VDD_CT#1 VDD_CT#2 VDD_CT#3 VDD_CT#4
AA20 AA21 AB20 AB21
M92-S2 I/O
VDDR3#1 VDDR3#2 VDDR3#3 VDDR3#4
AA17 AA18 AB17 AB18
VDDR5 VDDR4#2 VDDR5 VDDR4 VDDR4 VDDR5 VDDR5
V12 Y12 U12 AA11 Y11 V11 U11
MEM CLK
VDDRHA VSSRHA
L17 L16
PLL
PCIE_PVDD NC_MPV18 NC_SPV18 SPV10 SPVSS
AM30 L8 H7 H8 J7
TP63 TP64
BACK BIAS
BBP#1 BBP#2
M11 M12
PCIE
PCIE_VDDR#1 … PCIE_VDDR#8
AB23 AC23 AD24 AE24 AE25 AE26 AF25 AG26
PCIE_VDDC#1 … PCIE_VDDC#12
L23 L24 L25 L26 M22 N22 N23 N24 R22 T22 U22 V22
CORE
VDDC#1 … VDDC#23
AA15 N15 N17 R13 R16 R18 R21 T12 T15 T17 T20 U13 U16 U18 U21 V15 V17 V20 V21 Y13 Y16 Y18 Y21
ISOLATED CORE I/O
VDDCI#1 … VDDCI#8
M13 M15 M16 M17 M18 M20 M21 N20
+V1.8S
13-,48-,49-,50-,51-,52-,53-,54-
C640 C598 C157 C599 10uF_6.3v
C639 C597 C594 C638 1uF_6.3v
C637 C591 C210 C205 1uF_6.3v
L18 BLM11A121S
C293 10uF_6.3v C259 0.1uF_16v C258 1uF_6.3v
+V3S_DELY 49-,51-
C287 10uF_6.3v C247 1uF_6.3v C255 1uF_6.3v
C662 10uF_6.3v C660 1uF_6.3v C661 1uF_6.3v C659 0.1uF_16v
L3 BLM11A121S
C148 10uF_6.3v C154 0.1uF_16v C155 1uF_6.3v
L512 BLM11A121S
+VDD_PCIE
C7042 10uF_6.3v C7047 1uF_6.3v C677 0.1uF_16v
+VDD_CORE 9-,51-
L543 BLM11A121S
+VDD_MPLL
C9391 10uF_6.3v C9394 1uF_6.3v C9396 0.1uF_10V
R9740 0_5%
+VPCIE 9-,50-
L8 BLM18PG121SN1
C279 10uF_6.3v C202 1uF_6.3v C242 1uF_6.3v C241 1uF_6.3v C201 1uF_6.3v C277 0.1uF_16v
C286 10uF_6.3v C209 C254 C246 C245 C203 C244 1uF_6.3v
C284 10uF_6.3v C252 C253 C249 C251 C207 C250 1uF_6.3v
C283 10uF_6.3v C683 10uF_6.3v C685 C682 C684 C243 1uF_6.3v
L5 BLM11A121S
C211 10uF_6.3v C208 1uF_6.3v C206 1uF_6.3v C204 1uF_6.3v
+V3S
11-,13-,14-,15-,19-,20-,24-,26-,27-,29-,30-,31-,32-,33-,34-,39-,41-,42-,43-,45-,46-,47-,48-,50-
R9739 100K_5%
Q2020 BSS84_3P
R9738 20K_5%
C7114 0.1uF_16v
Q2021 SSM3K7002F

INVENTEC

TITLE *VV Discrete*

SIZE	CODE	DOC. NUMBER	REV
A3	CS	*1310A22294-0-MTR*	*A01*

CHANGE by *Chang, Roger* *4-Sep-2008* SHEET 51 OF 54

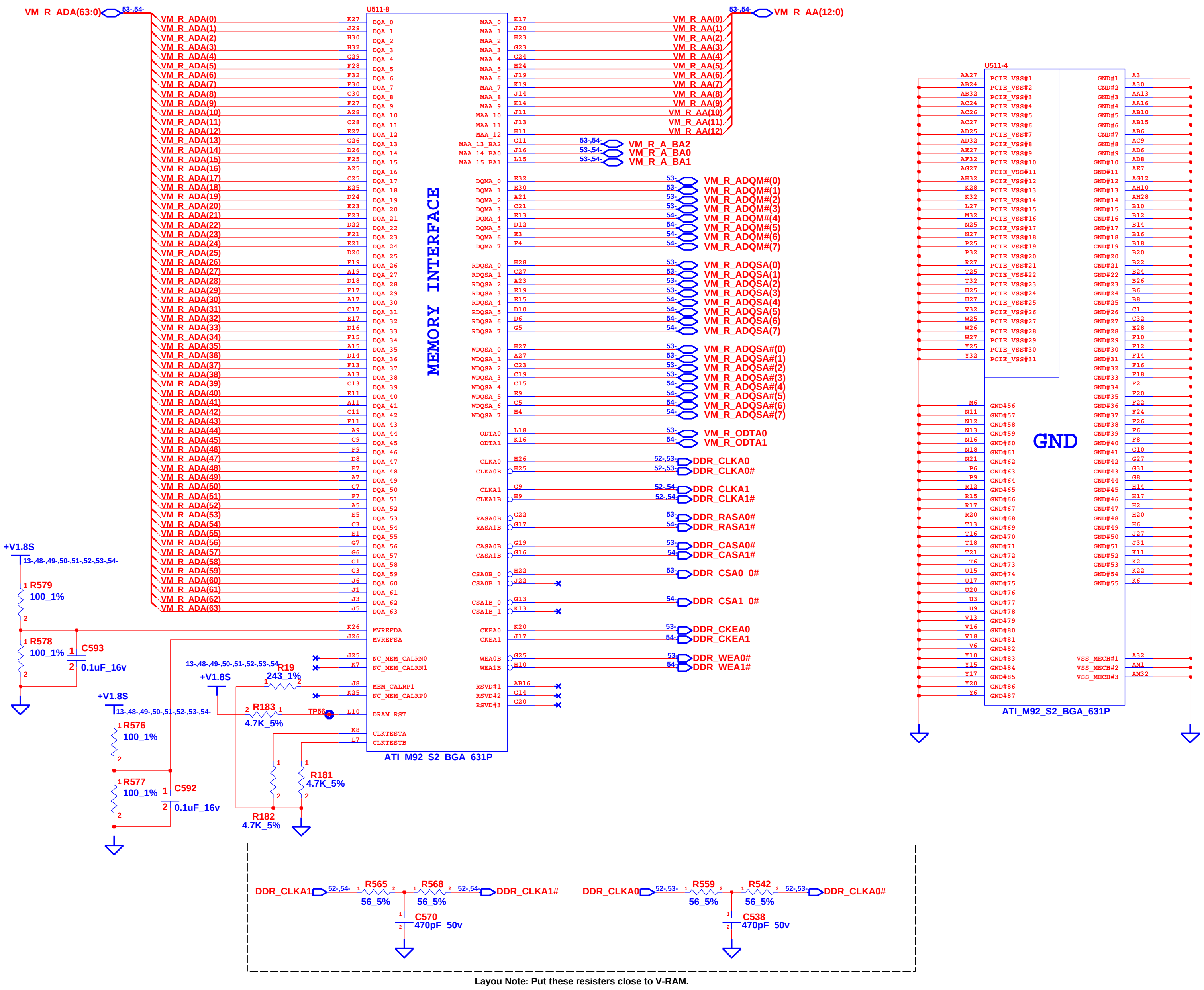
VM_R_ADA(63:0)
53-,54-
VM_R_ADA(0)
VM_R_ADA(1)
VM_R_ADA(2)
VM_R_ADA(3)
VM_R_ADA(4)
VM_R_ADA(5)
VM_R_ADA(6)
VM_R_ADA(7)
VM_R_ADA(8)
VM_R_ADA(9)
VM_R_ADA(10)
VM_R_ADA(11)
VM_R_ADA(12)
VM_R_ADA(13)
VM_R_ADA(14)
VM_R_ADA(15)
VM_R_ADA(16)
VM_R_ADA(17)
VM_R_ADA(18)
VM_R_ADA(19)
VM_R_ADA(20)
VM_R_ADA(21)
VM_R_ADA(22)
VM_R_ADA(23)
VM_R_ADA(24)
VM_R_ADA(25)
VM_R_ADA(26)
VM_R_ADA(27)
VM_R_ADA(28)
VM_R_ADA(29)
VM_R_ADA(30)
VM_R_ADA(31)
VM_R_ADA(32)
VM_R_ADA(33)
VM_R_ADA(34)
VM_R_ADA(35)
VM_R_ADA(36)
VM_R_ADA(37)
VM_R_ADA(38)
VM_R_ADA(39)
VM_R_ADA(40)
VM_R_ADA(41)
VM_R_ADA(42)
VM_R_ADA(43)
VM_R_ADA(44)
VM_R_ADA(45)
VM_R_ADA(46)
VM_R_ADA(47)
VM_R_ADA(48)
VM_R_ADA(49)
VM_R_ADA(50)
VM_R_ADA(51)
VM_R_ADA(52)
VM_R_ADA(53)
VM_R_ADA(54)
VM_R_ADA(55)
VM_R_ADA(56)
VM_R_ADA(57)
VM_R_ADA(58)
VM_R_ADA(59)
VM_R_ADA(60)
VM_R_ADA(61)
VM_R_ADA(62)
VM_R_ADA(63)
U511-8
MEMORY INTERFACE
DQA_0 … DQA_63
MAA_0 … MAA_12
MAA_13_BA2
MAA_14_BA0
MAA_15_BA1
DQMA_0 … DQMA_7
RDQSA_0 … RDQSA_7
WDQSA_0 … WDQSA_7
ODTA0
ODTA1
CLKA0
CLKA0B
CLKA1
CLKA1B
RASA0B
RASA1B
CASA0B
CASA1B
CSA0B_0
CSA0B_1
CSA1B_0
CSA1B_1
CKEA0
CKEA1
WEA0B
WEA1B
RSVD#1
RSVD#2
RSVD#3
MVREFDA
MVREFSA
NC_MEM_CALRN0
NC_MEM_CALRN1
MEM_CALRP1
NC_MEM_CALRP0
DRAM_RST
CLKTESTA
CLKTESTB
ATI_M92_S2_BGA_631P
VM_R_AA(12:0)
53-,54-
VM_R_AA(0)
VM_R_AA(1)
VM_R_AA(2)
VM_R_AA(3)
VM_R_AA(4)
VM_R_AA(5)
VM_R_AA(6)
VM_R_AA(7)
VM_R_AA(8)
VM_R_AA(9)
VM_R_AA(10)
VM_R_AA(11)
VM_R_AA(12)
VM_R_A_BA2
VM_R_A_BA0
VM_R_A_BA1
VM_R_ADQM#(0)
VM_R_ADQM#(1)
VM_R_ADQM#(2)
VM_R_ADQM#(3)
VM_R_ADQM#(4)
VM_R_ADQM#(5)
VM_R_ADQM#(6)
VM_R_ADQM#(7)
VM_R_ADQSA(0)
VM_R_ADQSA(1)
VM_R_ADQSA(2)
VM_R_ADQSA(3)
VM_R_ADQSA(4)
VM_R_ADQSA(5)
VM_R_ADQSA(6)
VM_R_ADQSA(7)
VM_R_ADQSA#(0)
VM_R_ADQSA#(1)
VM_R_ADQSA#(2)
VM_R_ADQSA#(3)
VM_R_ADQSA#(4)
VM_R_ADQSA#(5)
VM_R_ADQSA#(6)
VM_R_ADQSA#(7)
VM_R_ODTA0
VM_R_ODTA1
DDR_CLKA0
DDR_CLKA0#
DDR_CLKA1
DDR_CLKA1#
DDR_RASA0#
DDR_RASA1#
DDR_CASA0#
DDR_CASA1#
DDR_CSA0_0#
DDR_CSA1_0#
DDR_CKEA0
DDR_CKEA1
DDR_WEA0#
DDR_WEA1#
+V1.8S
13-,48-,49-,50-,51-,52-,53-,54-
R579
100_1%
R578
100_1%
C593
0.1uF_16v
R576
100_1%
R577
100_1%
C592
0.1uF_16v
R19
243_1%
R183
4.7K_5%
TP56
R181
4.7K_5%
R182
4.7K_5%
U511-4
PCIE_VSS#1 … PCIE_VSS#31
GND#1 … GND#87
GND
VSS_MECH#1
VSS_MECH#2
VSS_MECH#3
ATI_M92_S2_BGA_631P
DDR_CLKA1
52-,54-
R565
56_5%
R568
56_5%
DDR_CLKA1#
C570
470pF_50v
DDR_CLKA0
52-,53-
R559
56_5%
R542
56_5%
DDR_CLKA0#
C538
470pF_50v

Layou Note: Put these resisters close to V-RAM.

INVENTEC

TITLE	VV Discrete		
SIZE	CODE	DOC. NUMBER	REV
A3	CS	1310A22294-0-MTR	A01

CHANGE by Chang, Roger 4-Sep-2008

SHEET 52 OF 54

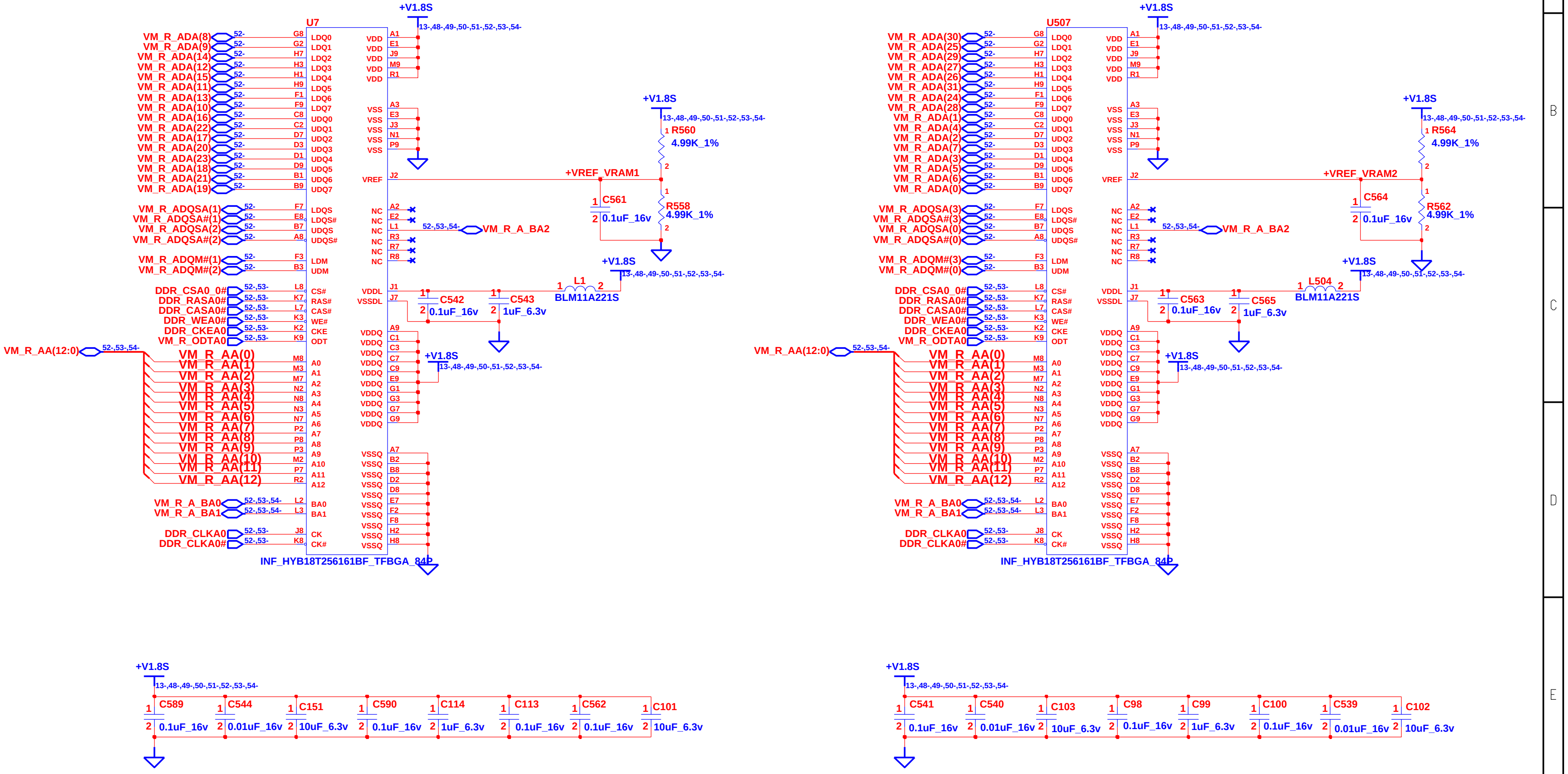
U7
U507
INF_HYB18T256161BF_TFBGA_84P
+V1.8S
13-,48-,49-,50-,51-,52-,53-,54-
VM_R_ADA(8)
VM_R_ADA(9)
VM_R_ADA(14)
VM_R_ADA(12)
VM_R_ADA(15)
VM_R_ADA(11)
VM_R_ADA(13)
VM_R_ADA(10)
VM_R_ADA(16)
VM_R_ADA(22)
VM_R_ADA(17)
VM_R_ADA(20)
VM_R_ADA(23)
VM_R_ADA(18)
VM_R_ADA(21)
VM_R_ADA(19)
VM_R_ADQSA(1)
VM_R_ADQSA#(1)
VM_R_ADQSA(2)
VM_R_ADQSA#(2)
VM_R_ADQM#(1)
VM_R_ADQM#(2)
VM_R_ADA(30)
VM_R_ADA(25)
VM_R_ADA(29)
VM_R_ADA(27)
VM_R_ADA(26)
VM_R_ADA(31)
VM_R_ADA(24)
VM_R_ADA(28)
VM_R_ADA(1)
VM_R_ADA(4)
VM_R_ADA(2)
VM_R_ADA(7)
VM_R_ADA(3)
VM_R_ADA(5)
VM_R_ADA(6)
VM_R_ADA(0)
VM_R_ADQSA(3)
VM_R_ADQSA#(3)
VM_R_ADQSA(0)
VM_R_ADQSA#(0)
VM_R_ADQM#(3)
VM_R_ADQM#(0)
DDR_CSA0_0#
DDR_RASA0#
DDR_CASA0#
DDR_WEA0#
DDR_CKEA0
VM_R_ODTA0
VM_R_AA(12:0)
52-,53-,54-
VM_R_AA(0)
VM_R_AA(1)
VM_R_AA(2)
VM_R_AA(3)
VM_R_AA(4)
VM_R_AA(5)
VM_R_AA(6)
VM_R_AA(7)
VM_R_AA(8)
VM_R_AA(9)
VM_R_AA(10)
VM_R_AA(11)
VM_R_AA(12)
VM_R_A_BA0
VM_R_A_BA1
DDR_CLKA0
DDR_CLKA0#
VM_R_A_BA2
LDQ0 LDQ1 LDQ2 LDQ3 LDQ4 LDQ5 LDQ6 LDQ7
UDQ0 UDQ1 UDQ2 UDQ3 UDQ4 UDQ5 UDQ6 UDQ7
LDQS LDQS# UDQS UDQS#
LDM UDM
CS# RAS# CAS# WE# CKE ODT
A0 A1 A2 A3 A4 A5 A6 A7 A8 A9 A10 A11 A12
BA0 BA1
CK CK#
VDD VSS VREF NC VDDL VSSDL VDDQ VSSQ
+VREF_VRAM1
+VREF_VRAM2
R560
R558
R562
R564
4.99K_1%
C561
C564
C542
C543
C563
C565
0.1uF_16v
1uF_6.3v
L1
L504
BLM11A221S
C589
C544
C151
C590
C114
C113
C562
C101
C541
C540
C103
C98
C99
C100
C539
C102
0.01uF_16v
10uF_6.3v

INVENTEC

TITLE *VV Discrete*

SIZE	CODE	DOC. NUMBER	REV
A3	CS	1310A22294-0-MTR	A01

CHANGE by *Chang, Roger* *4-Sep-2008* SHEET 53 OF 54

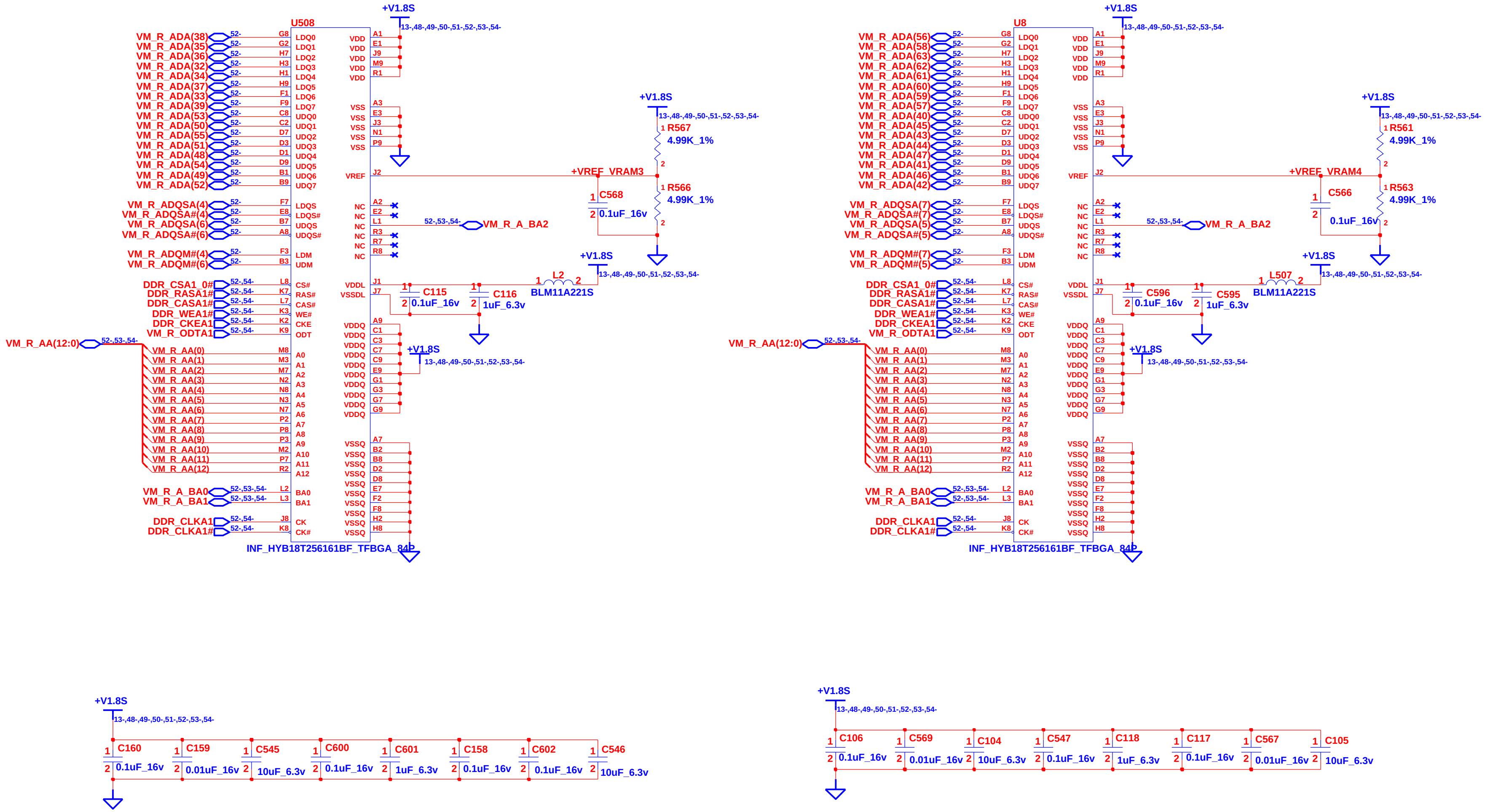
U508
U8
INF_HYB18T256161BF_TFBGA_84P
+V1.8S
13-,48-,49-,50-,51-,52-,53-,54-
VM_R_ADA(38)
VM_R_ADA(35)
VM_R_ADA(36)
VM_R_ADA(32)
VM_R_ADA(34)
VM_R_ADA(37)
VM_R_ADA(33)
VM_R_ADA(39)
VM_R_ADA(53)
VM_R_ADA(50)
VM_R_ADA(55)
VM_R_ADA(51)
VM_R_ADA(48)
VM_R_ADA(54)
VM_R_ADA(49)
VM_R_ADA(52)
VM_R_ADQSA(4)
VM_R_ADQSA#(4)
VM_R_ADQSA(6)
VM_R_ADQSA#(6)
VM_R_ADQM#(4)
VM_R_ADQM#(6)
VM_R_ADA(56)
VM_R_ADA(58)
VM_R_ADA(63)
VM_R_ADA(62)
VM_R_ADA(61)
VM_R_ADA(60)
VM_R_ADA(59)
VM_R_ADA(57)
VM_R_ADA(40)
VM_R_ADA(45)
VM_R_ADA(43)
VM_R_ADA(44)
VM_R_ADA(47)
VM_R_ADA(41)
VM_R_ADA(46)
VM_R_ADA(42)
VM_R_ADQSA(7)
VM_R_ADQSA#(7)
VM_R_ADQSA(5)
VM_R_ADQSA#(5)
VM_R_ADQM#(7)
VM_R_ADQM#(5)
DDR_CSA1_0#
DDR_RASA1#
DDR_CASA1#
DDR_WEA1#
DDR_CKEA1
VM_R_ODTA1
VM_R_AA(12:0)
52-,53-,54-
VM_R_AA(0)
VM_R_AA(1)
VM_R_AA(2)
VM_R_AA(3)
VM_R_AA(4)
VM_R_AA(5)
VM_R_AA(6)
VM_R_AA(7)
VM_R_AA(8)
VM_R_AA(9)
VM_R_AA(10)
VM_R_AA(11)
VM_R_AA(12)
VM_R_A_BA0
VM_R_A_BA1
VM_R_A_BA2
DDR_CLKA1
DDR_CLKA1#
LDQ0
LDQ1
LDQ2
LDQ3
LDQ4
LDQ5
LDQ6
LDQ7
UDQ0
UDQ1
UDQ2
UDQ3
UDQ4
UDQ5
UDQ6
UDQ7
LDQS
LDQS#
UDQS
UDQS#
LDM
UDM
CS#
RAS#
CAS#
WE#
CKE
ODT
A0
A1
A2
A3
A4
A5
A6
A7
A8
A9
A10
A11
A12
BA0
BA1
CK
CK#
VDD
VSS
VREF
NC
VDDL
VSSDL
VDDQ
VSSQ
+VREF_VRAM3
+VREF_VRAM4
R567
R566
R561
R563
4.99K_1%
C568
C566
0.1uF_16v
C115
C116
C596
C595
1uF_6.3v
L2
L507
BLM11A221S
C160
C159
C545
C600
C601
C158
C602
C546
C106
C569
C104
C547
C118
C117
C567
C105
0.01uF_16v
10uF_6.3v

INVENTEC

TITLE *VV Discrete*

SIZE	CODE	DOC. NUMBER	REV
A3	CS	1310A22294-0-MTR	A01

CHANGE by *Chang, Roger* *4-Sep-2008* SHEET 54 OF 54