JW8B/C BLOCK DIAGRAM

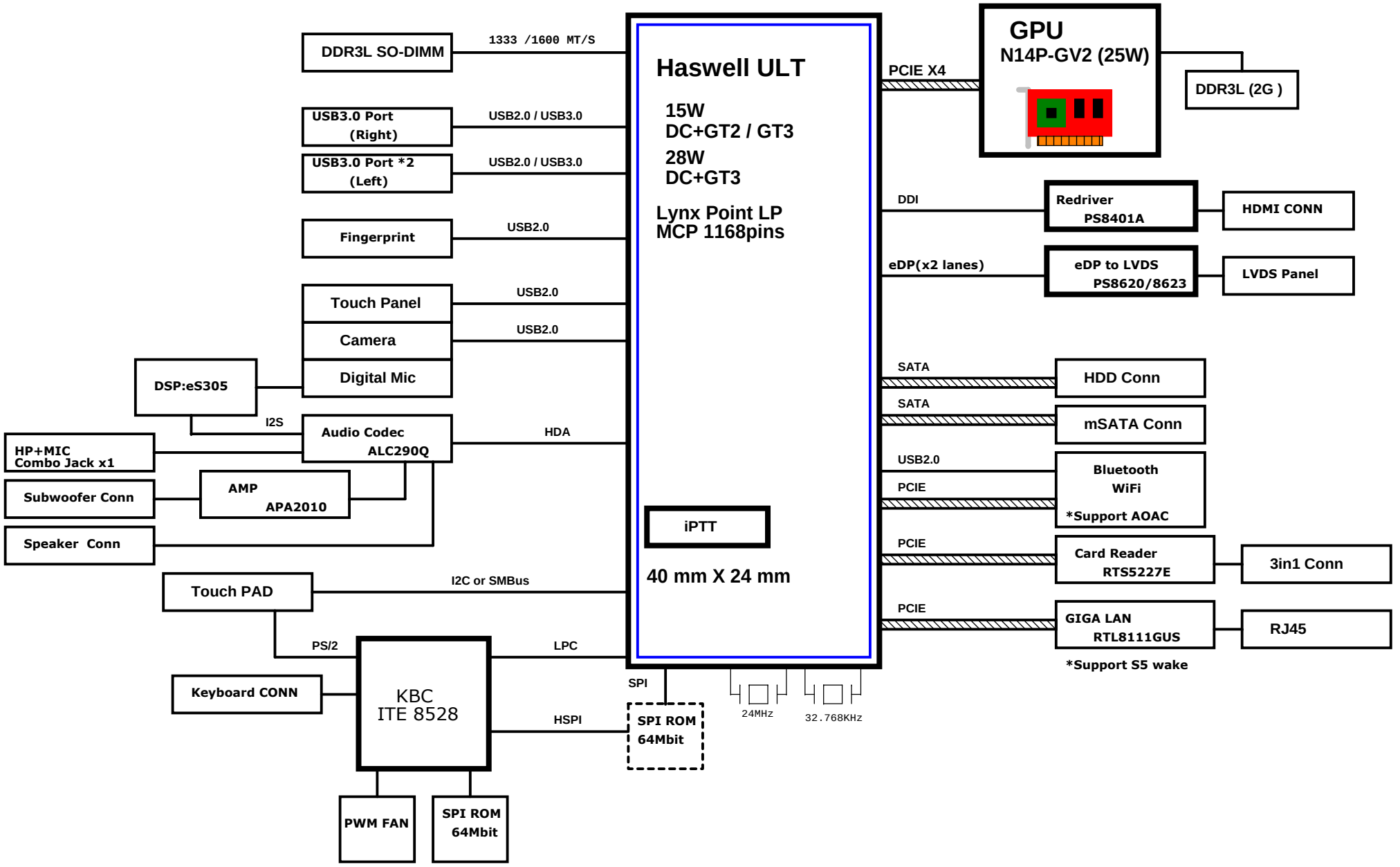

Quanta Computer Inc.

PROJECT : JW8B

Size	Document Number	Rev
	Block Diagram	A

Date: Friday, May 10, 2013 Sheet 1 of 57

HSIO Port	USB3.0	PCIE	SATA
1	USB3.0_1 CN6		
2	USB3.0_2 CN4		
3	USB3.0_3 CN5	PCIE1 X	
4	USB3.0_4 X	PCIE2 Card Reader	
5		PCIE3 GIGA LAN	
6		PCIE4 WIFI	
7		PCIE5 GPU 4X	
8		PCIE5 GPU 4X	
9		PCIE5 GPU 4X	
10		PCIE5 GPU 4X	
11		PCIE6 X	SATA3 X
12		PCIE6 X	SATA2 mSATA
13		PCIE6 X	SATA1 HDD
14		PCIE6 X	SATA0 X

PCIE CLK
CLK0 X
CLK1 Card Reader
CLK2 GIGA LAN
CLK3 WIFI
CLK4 GPU 4X
CLK5 X

USB2.0
USB2.0_0 CN4
USB2.0_1 CN6
USB2.0_2 CN5
USB2.0_3 Finger Print
USB2.0_4 Camera
USB2.0_5 eTP
USB2.0_6 Blue Tooth
USB2.0_7 Touch Screen

Quanta Computer Inc.

PROJECT : JW8B

Size	Document Number	Rev
	PORT ASSIGNMENT	A

Date: Wednesday, June 19, 2013 Sheet 2 of 57

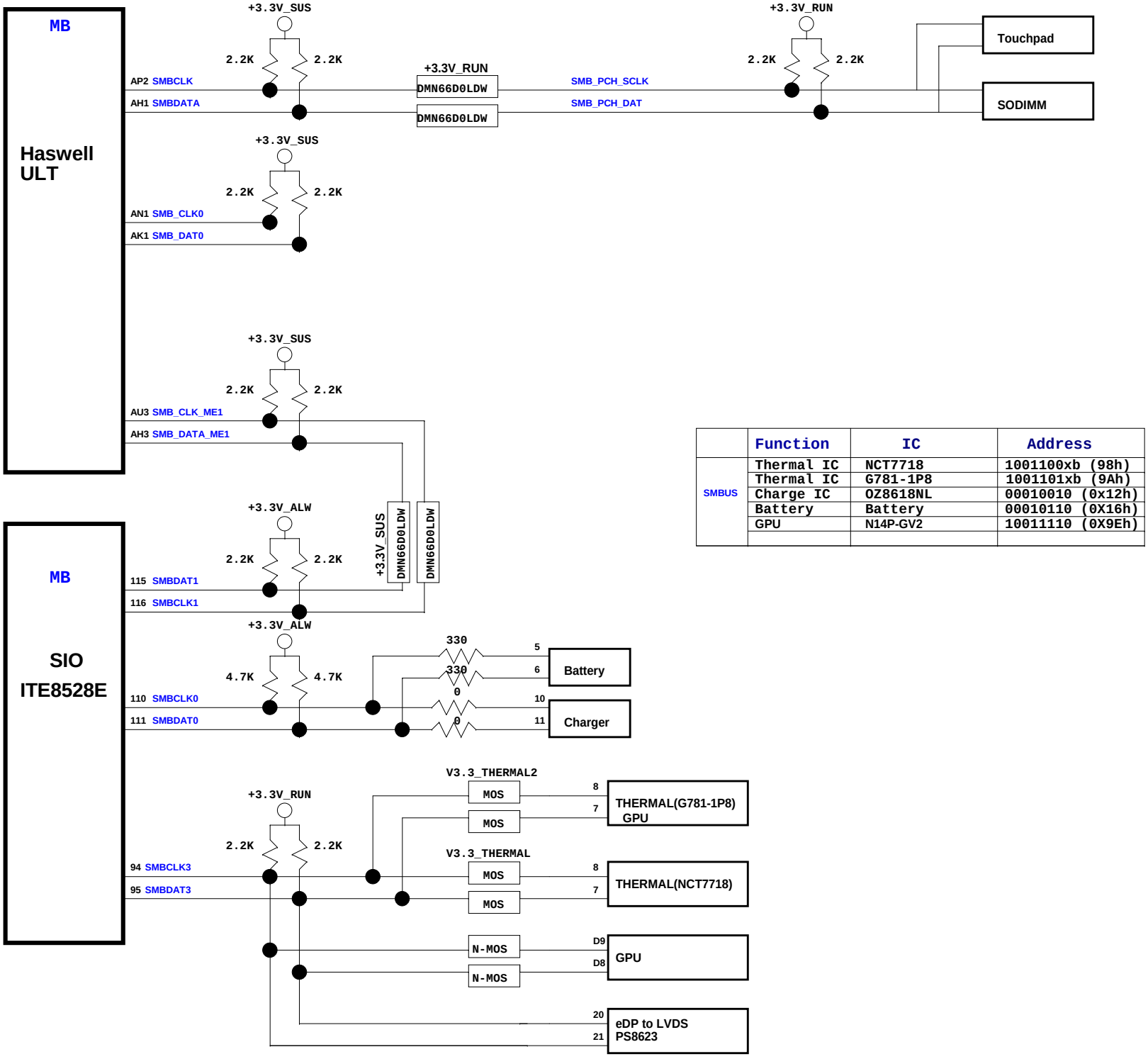

	Function	IC	Address
SMBUS	Thermal IC	NCT7718	1001100xb (98h)
	Thermal IC	G781-1P8	1001101xb (9Ah)
	Charge IC	OZ8618NL	00010010 (0x12h)
	Battery	Battery	00010110 (0X16h)
	GPU	N14P-GV2	10011110 (0X9Eh)

Quanta Computer Inc.
PROJECT : JW8B

Size	Document Number	Rev
	SMBUS	A

Date: Monday, July 08, 2013 Sheet 3 of 57

VER : 1A

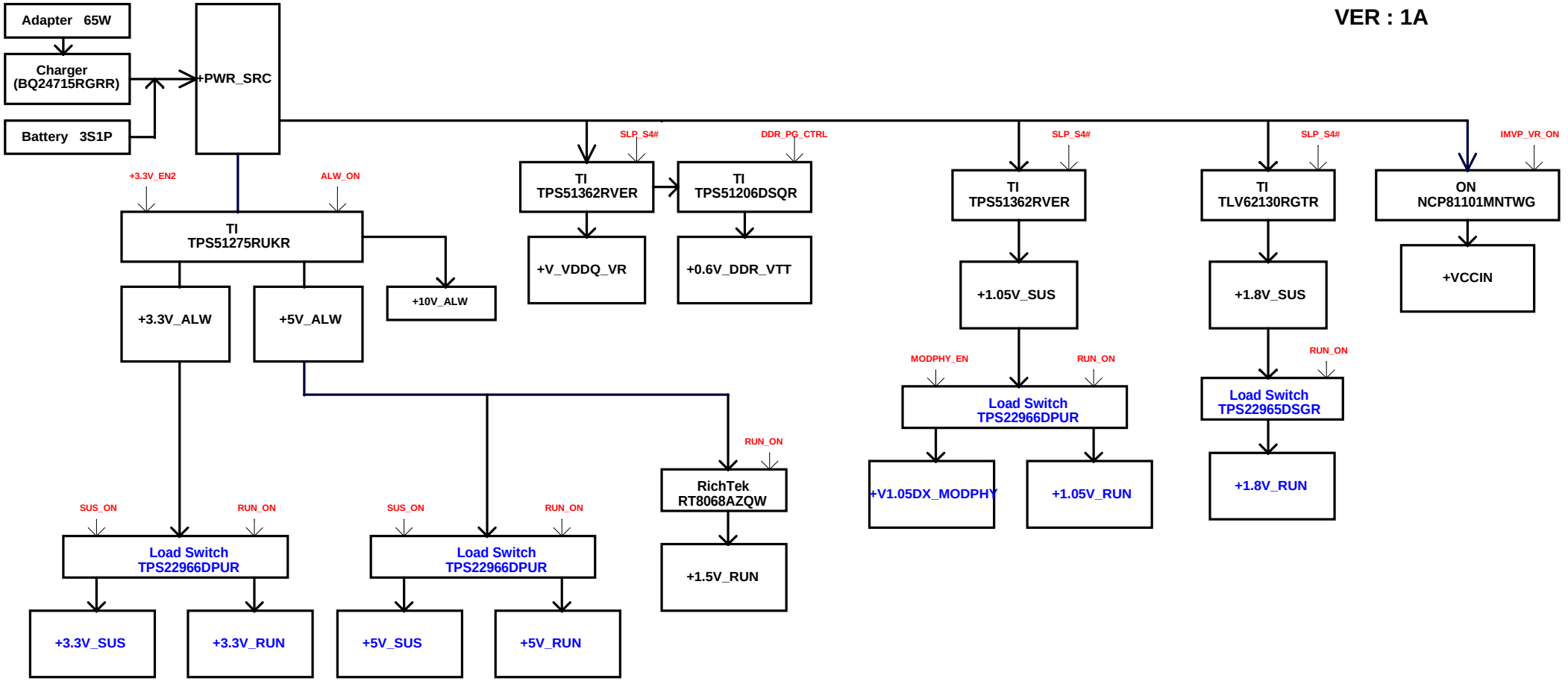

Quanta Computer Inc.

PROJECT : JW8B

Size	Document Number	Rev
	Power Block Diagram	A

Date: Friday, May 10, 2013 Sheet 4 of 57

Battery Mode

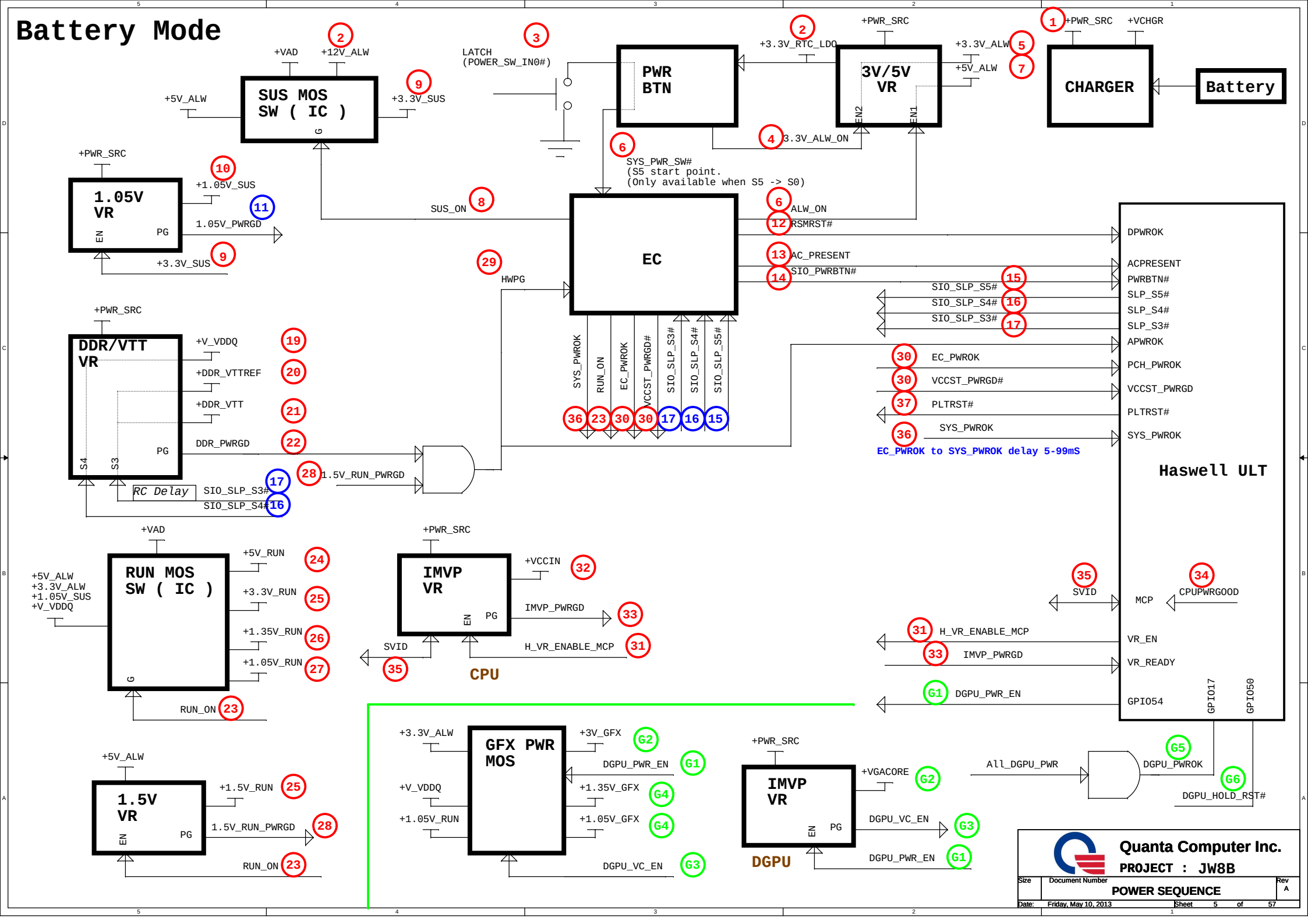

Quanta Computer Inc.	
PROJECT : JW8B	
Size	Document Number: POWER SEQUENCE
Rev	A
Date: Friday, May 10, 2013	Sheet 5 of 57

Power Sequence (G3 to S0)

Shark Bay ULT PSS, 490828, Rev1.1

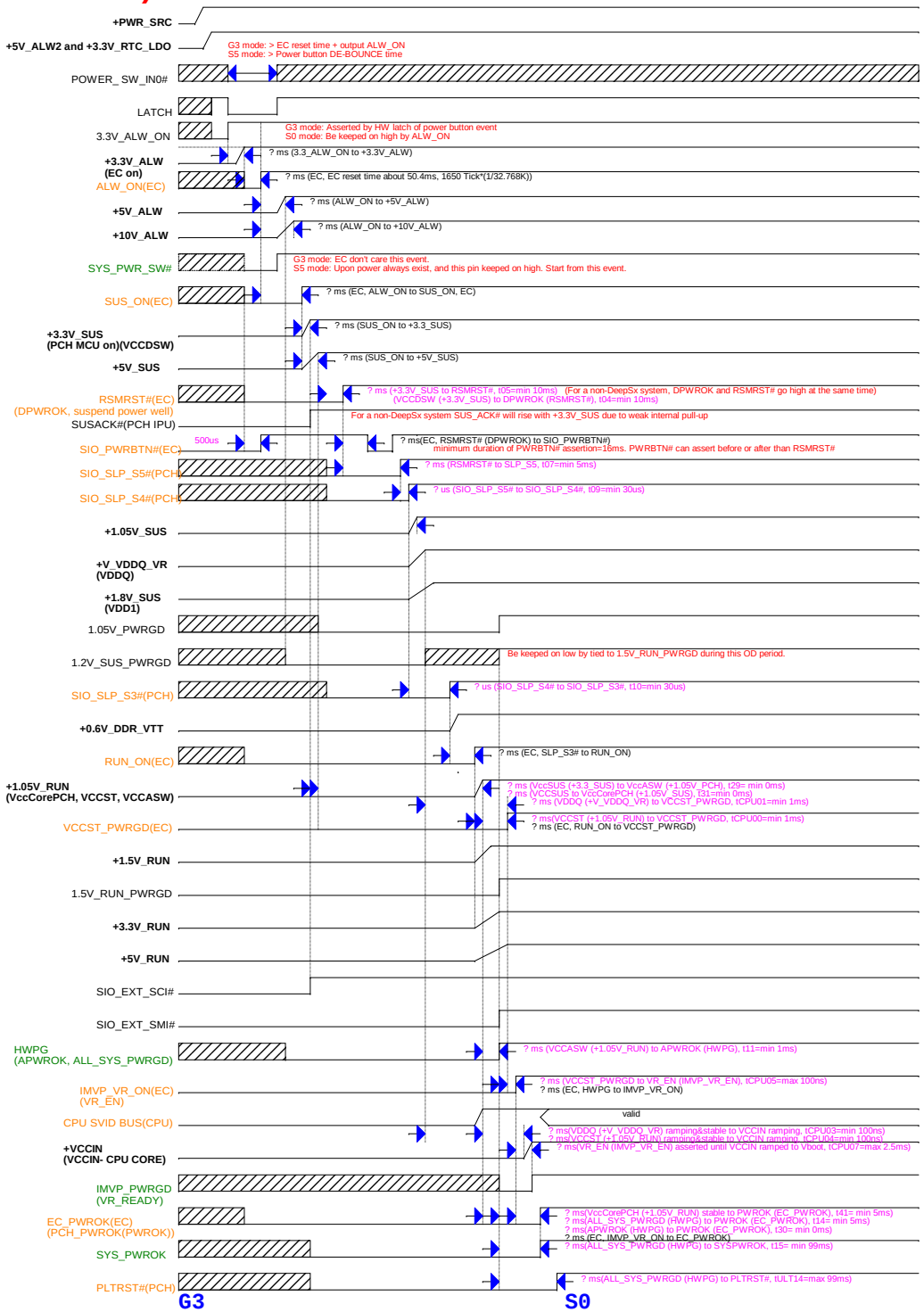

Quanta Computer Inc.

PROJECT : JW8B

Size	Document Number	Rev
	G3 to S0	A
Date: Friday, May 10, 2013	Sheet 6 of 57	

Haswell ULT (DISPLAY)

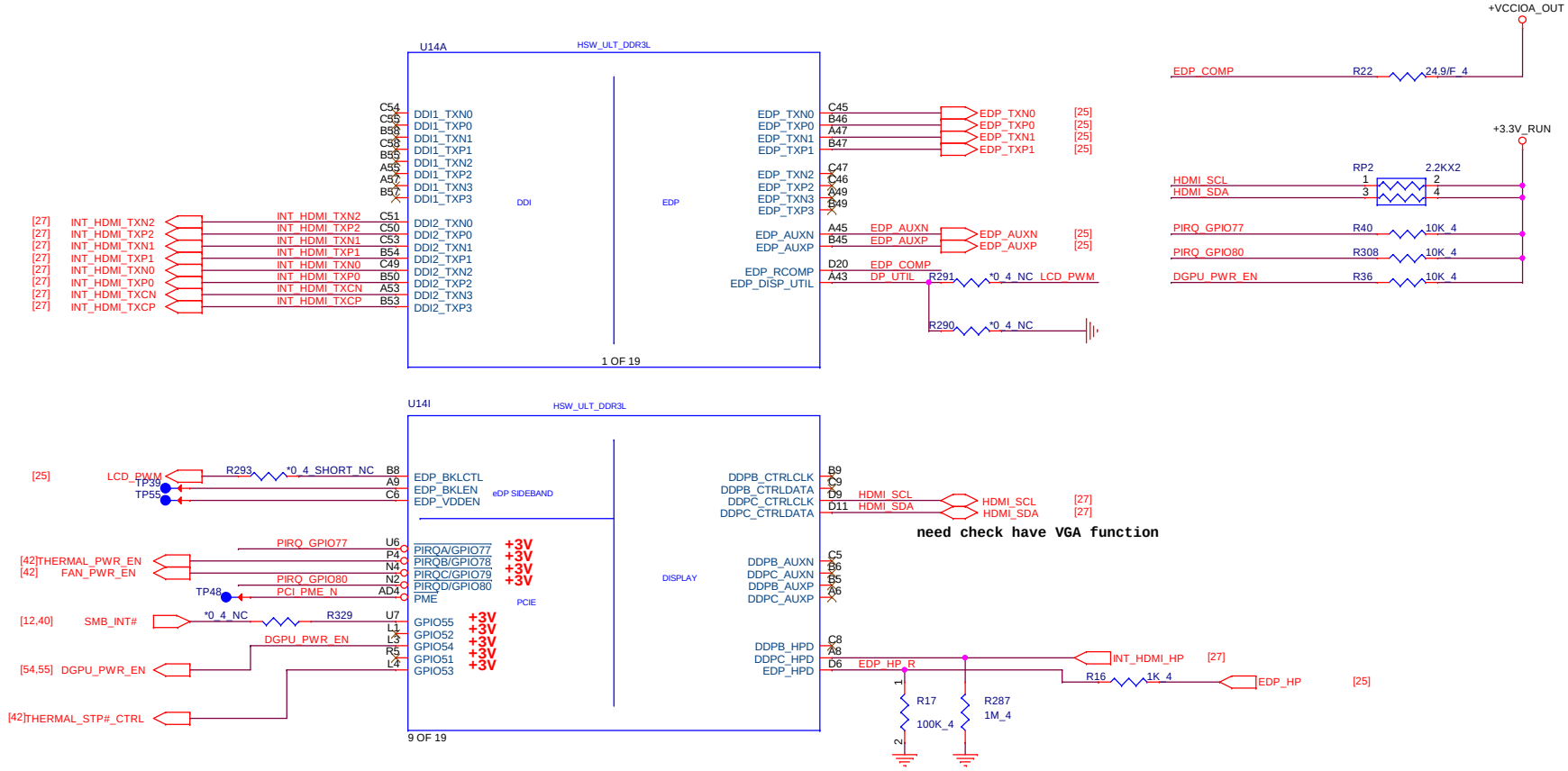

Quanta Computer Inc.			
PROJECT : JW8B			
Size	Document Number		Rev
	Haswell ULT 1/12		A
Date: Tuesday, July 16, 2013	Sheet 7 of 57		

Haswell ULT (DDR3L)

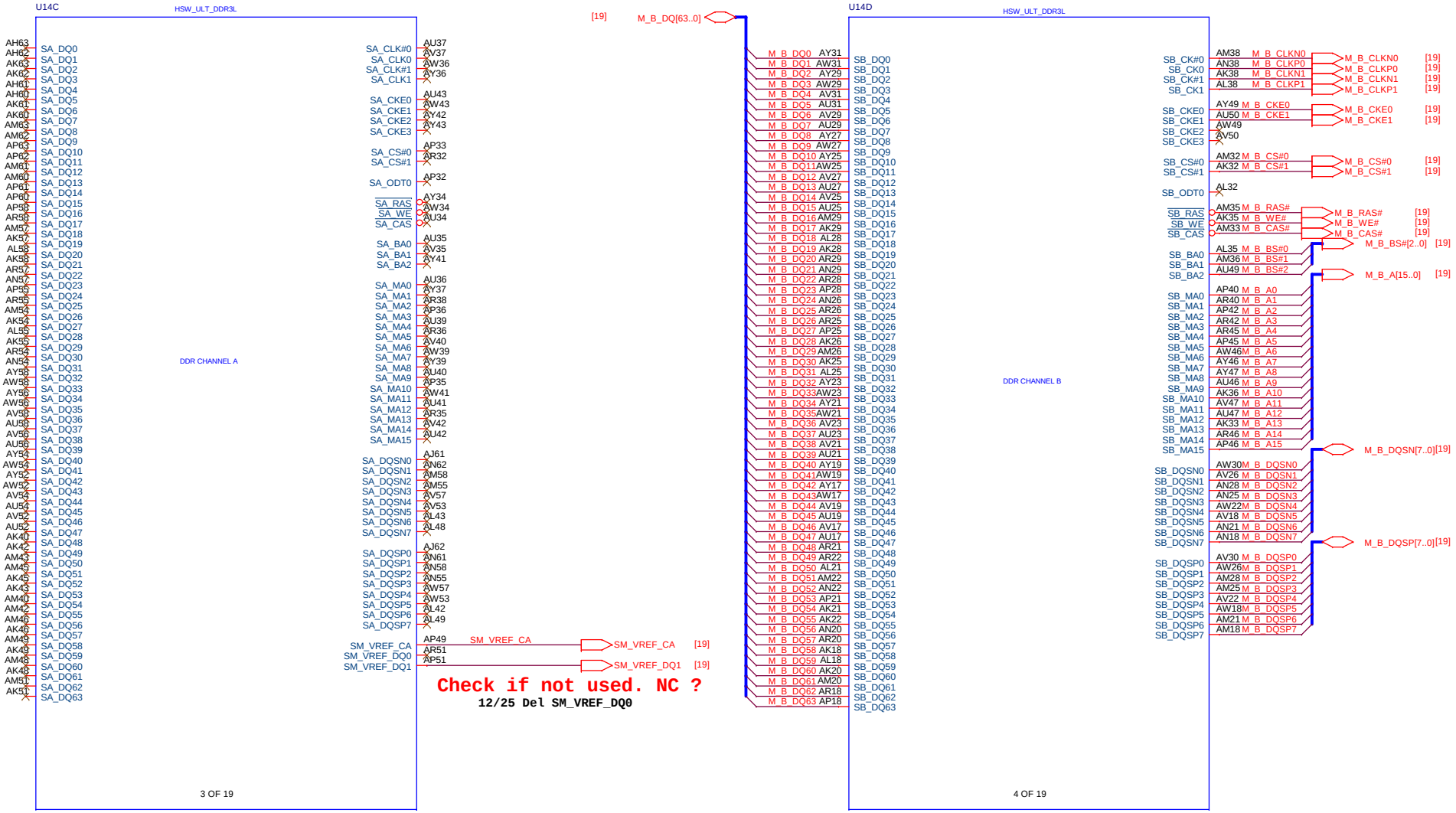

Quanta Computer Inc.			
PROJECT : JW8B			
Size	Document Number		Rev
	Haswell ULT 2/12		A
Date: Friday, May 10, 2013	Sheet 8	of 57	

Hasswell ULT(GPIO,LPIO,MISC)

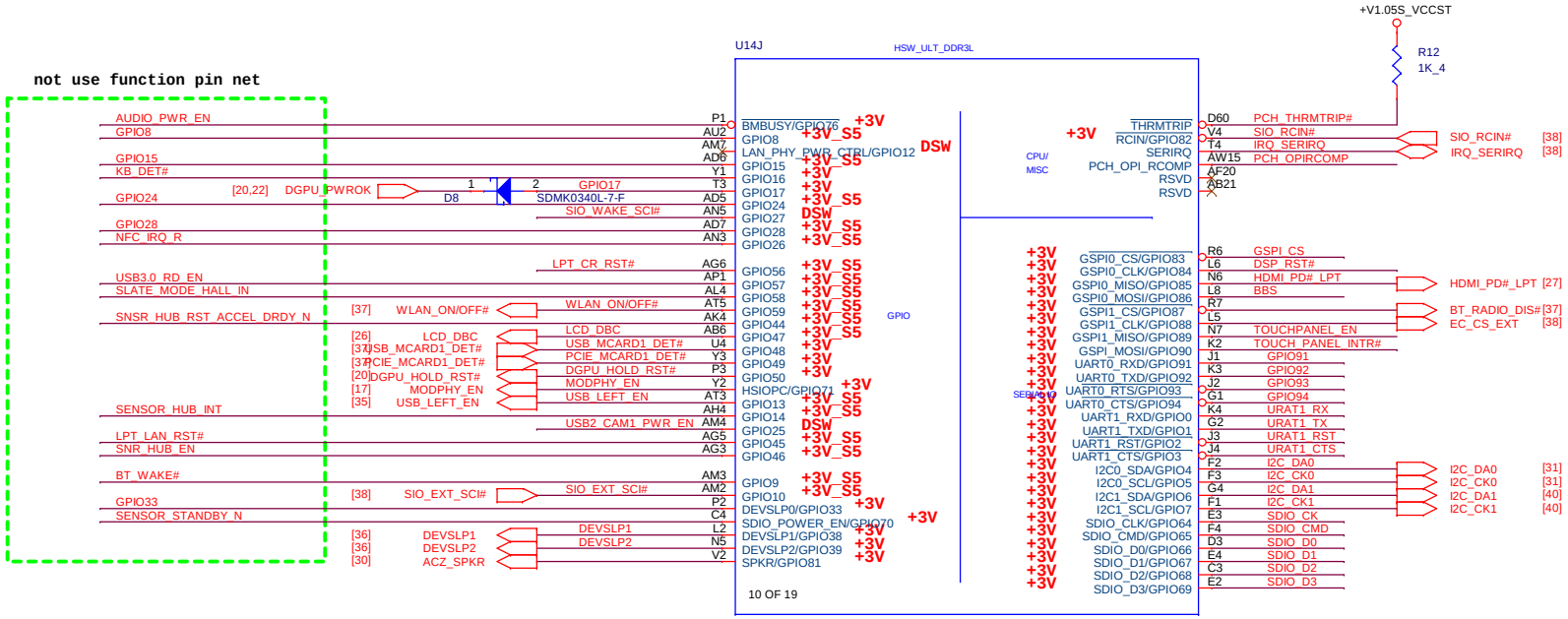

GPIO Pull-up/Pull-down(CLG)

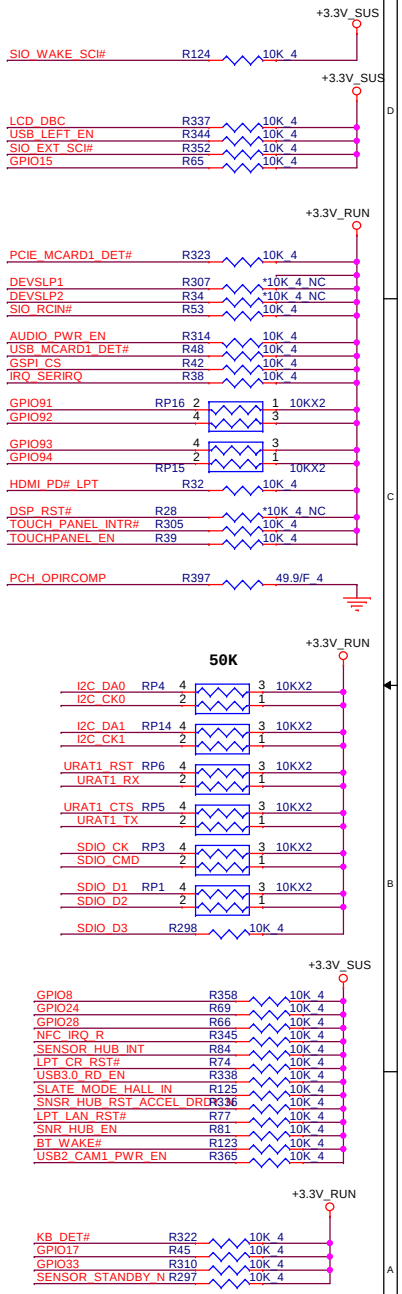

No Reboot Strap(GPIO81)	
NC	Default
PU	EN

GPIO86:Boot BIOS Strap Bit	
PU	LPC
PD	SPI (Default IPD)

TLS CONFIDENTIALITY STRAP(GPIO15)	
NC	Default
PU	EN

GPIO66 : Top-Block Swap	
R1547	ENABLE
R1547_NC	DISABLE(Default)

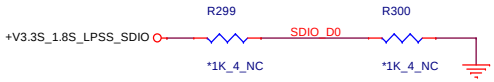

Quanta Computer Inc.

PROJECT : JW8B

Size	Document Number	Rev
	Haswell ULT 3/12	A

Date: Thursday, June 13, 2013 Sheet 9 of 57

Haswell ULT (PCIE,USB)

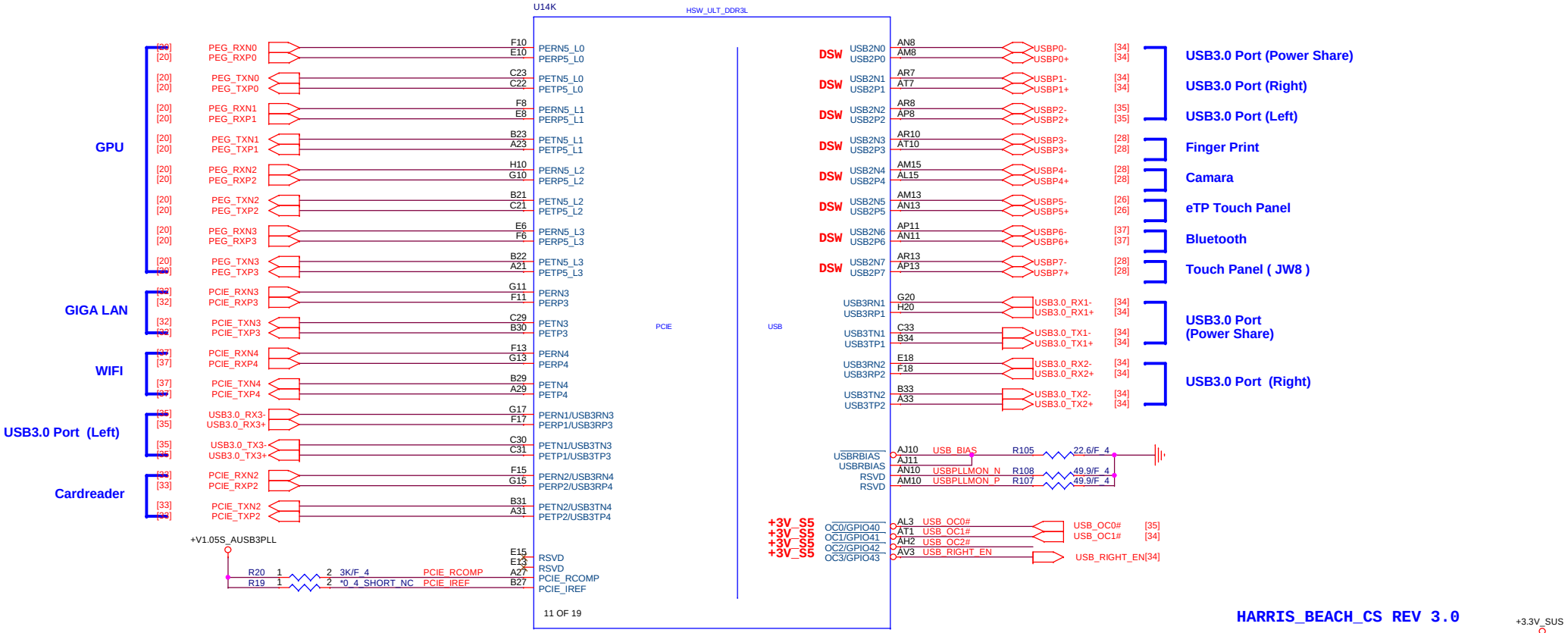

HARRIS_BEACH_CS REV 3.0

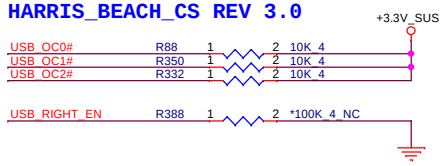

Quanta Computer Inc.		
PROJECT : JW8B		
Size	Document Number: Haswell ULT 4/12	Rev: A
Date: Monday, July 08, 2013	Sheet 10 of 57	

Haswell ULT (RTC, HDA, JTAG, SATA)

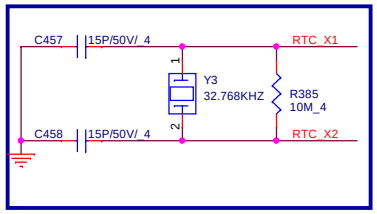

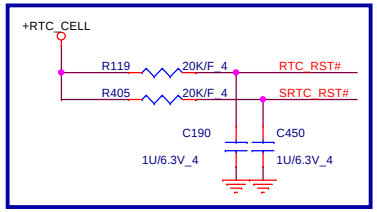

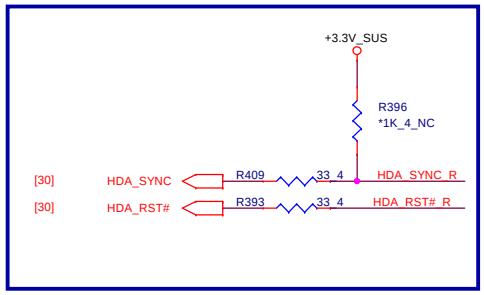

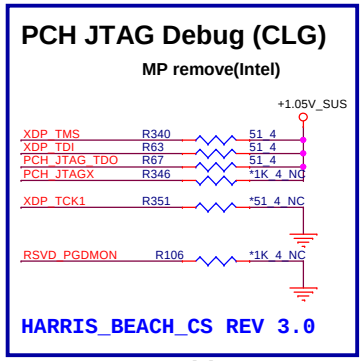

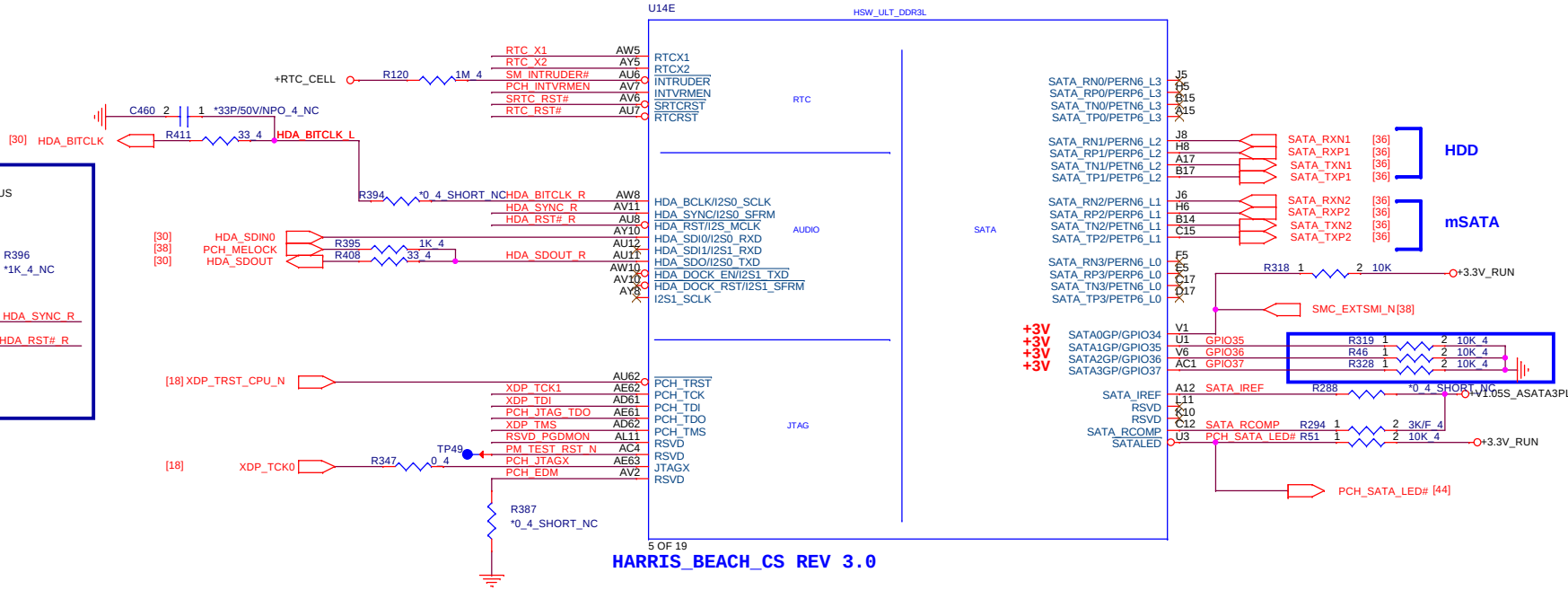

DFXTESTMODE
HIGH - DFXTESTMODE DISABLED(DEFAULT)
LOW - DFXTESTMODE ENABLED

PCH Strap Table

Pin Name	Strap description	Sampled	Configuration	note
SPKR	No reboot mode setting	PWROK	0 = Default (weak pull-down 20K) 1 = Setting to No-Reboot mode	
HDA_SDO	Flash Descriptor Security Override / Intel ME Debug Mode	PWROK	0 = Security Effect (Int PD) 1 = Can be Override	
INTVRMEN	Integrated 1.05V VRM enable	ALWAYS	Should be always pull-up	+RTC_CELL R407 *330K_4_NC PCH_INTVRMEN R392 330K_4

Quanta Computer Inc.
PROJECT : JW8B

Size	Document Number	Rev
	Haswell ULT 5/12	A

Date: Monday, July 08, 2013 Sheet 11 of 57

Haswell ULT (CLK)

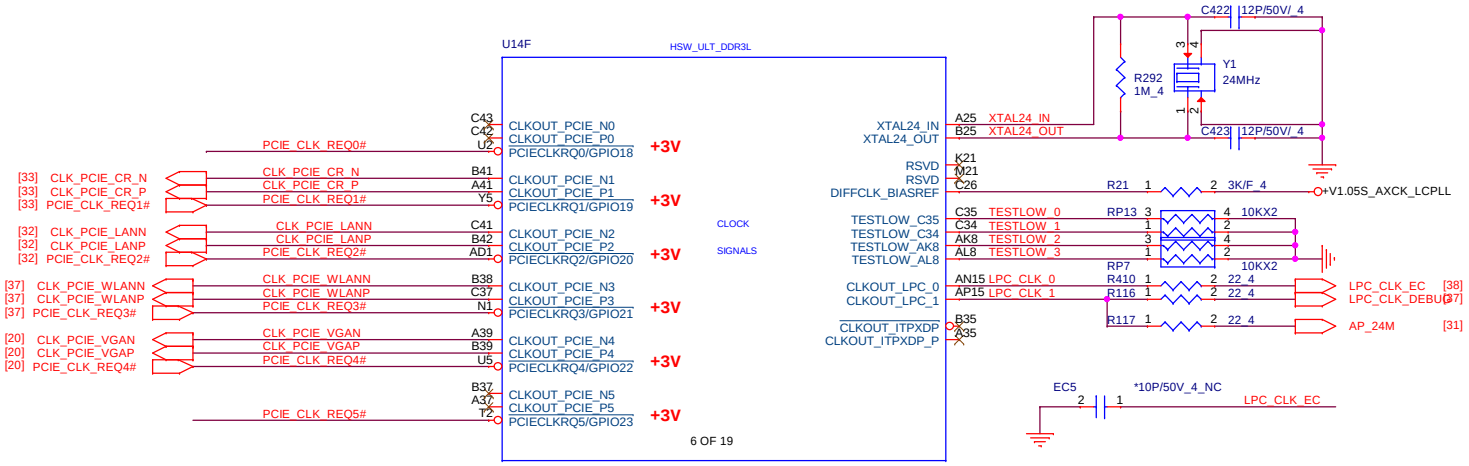

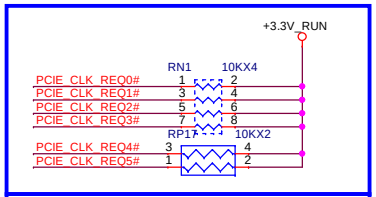

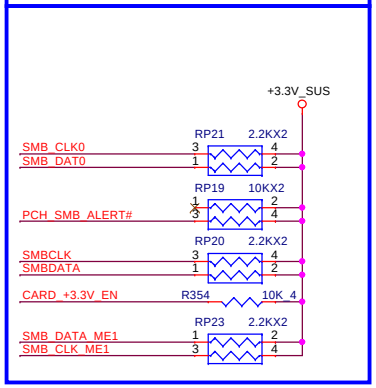

Haswell ULT (LPC/SPI/SMB/CLINK)

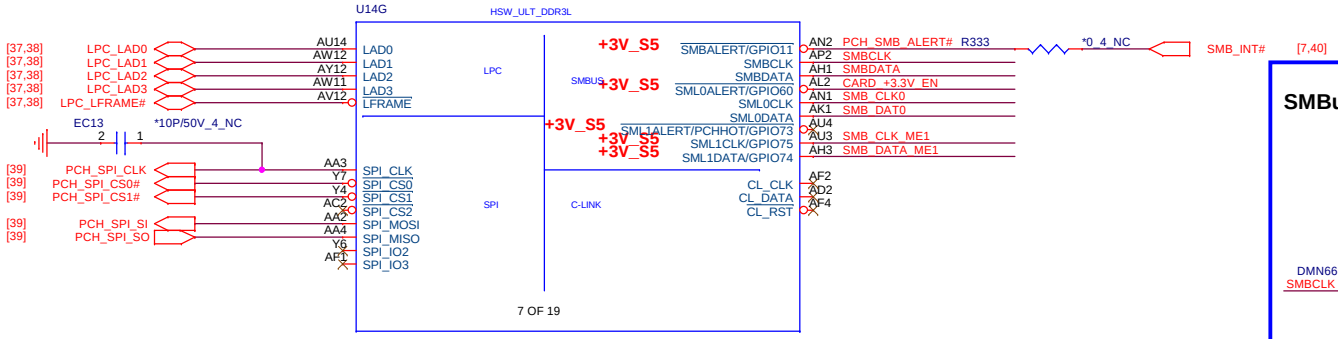

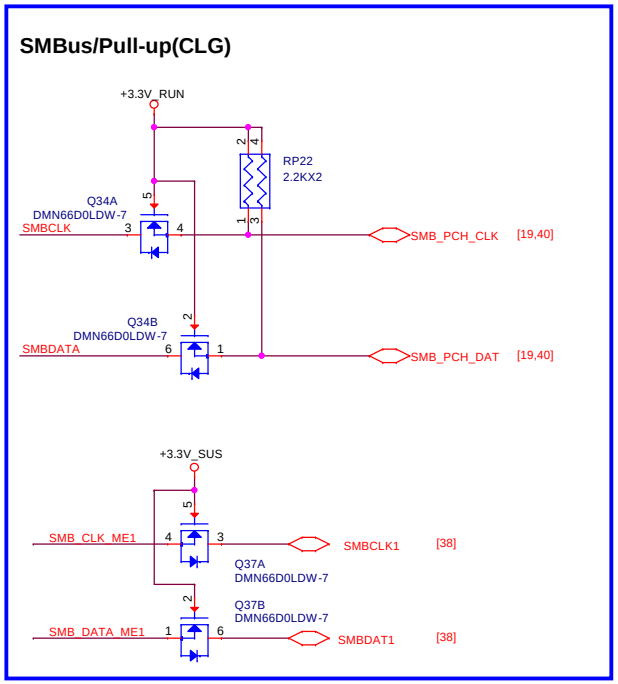

Quanta Computer Inc.

PROJECT : JW8B

Size	Document Number	Rev
	Haswell ULT 6/12	A

Date: Thursday, June 13, 2013 Sheet 12 of 57

Haswell ULT (SYSTEM POWER MANAGEMENT)

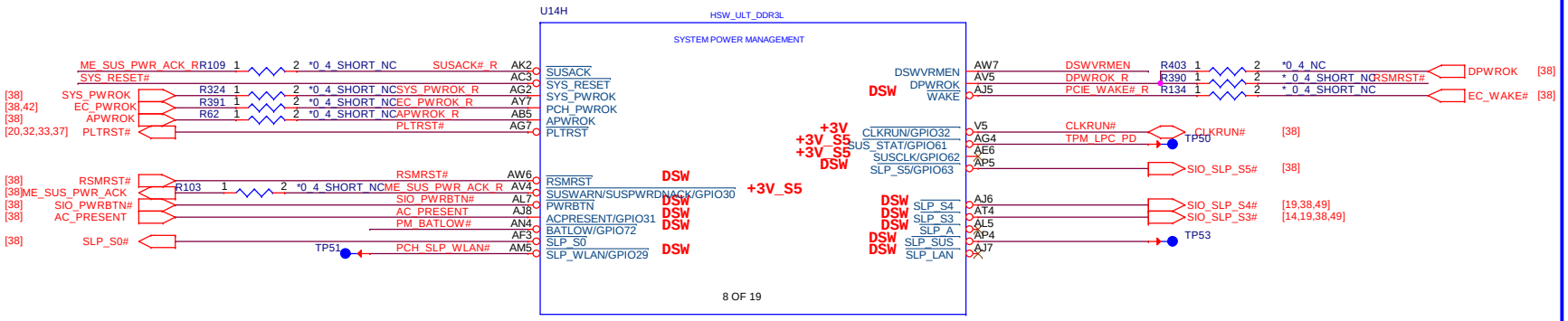

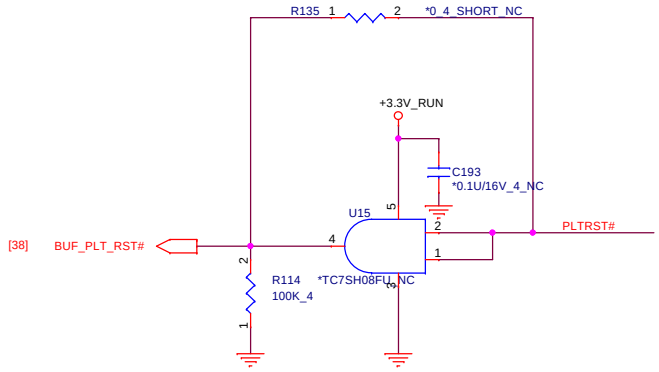

PCH Pull-high/low(CLG)

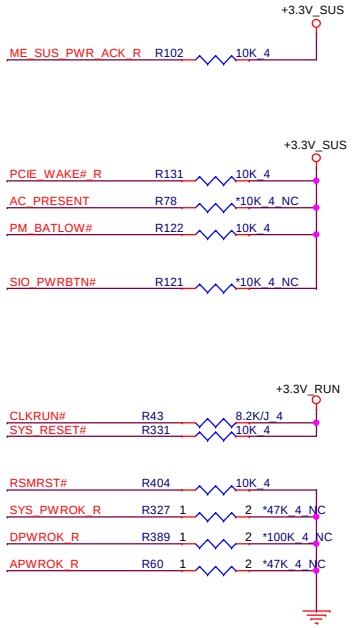

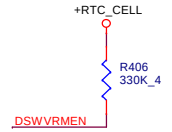

On Die DSW VR Enable
High = Enable (Default)
Low = Disable

Quanta Computer Inc.

PROJECT : JW8B

Size	Document Number	Rev
	Haswell ULT 7/12	A
Date: Monday, July 08, 2013	Sheet 13 of 57	

Haswell ULT MCP(POWER)

CPU VDDQ

Haswell ULT 15W : 4.2A

6X10UF MLCC
4X2.2UF MLCC

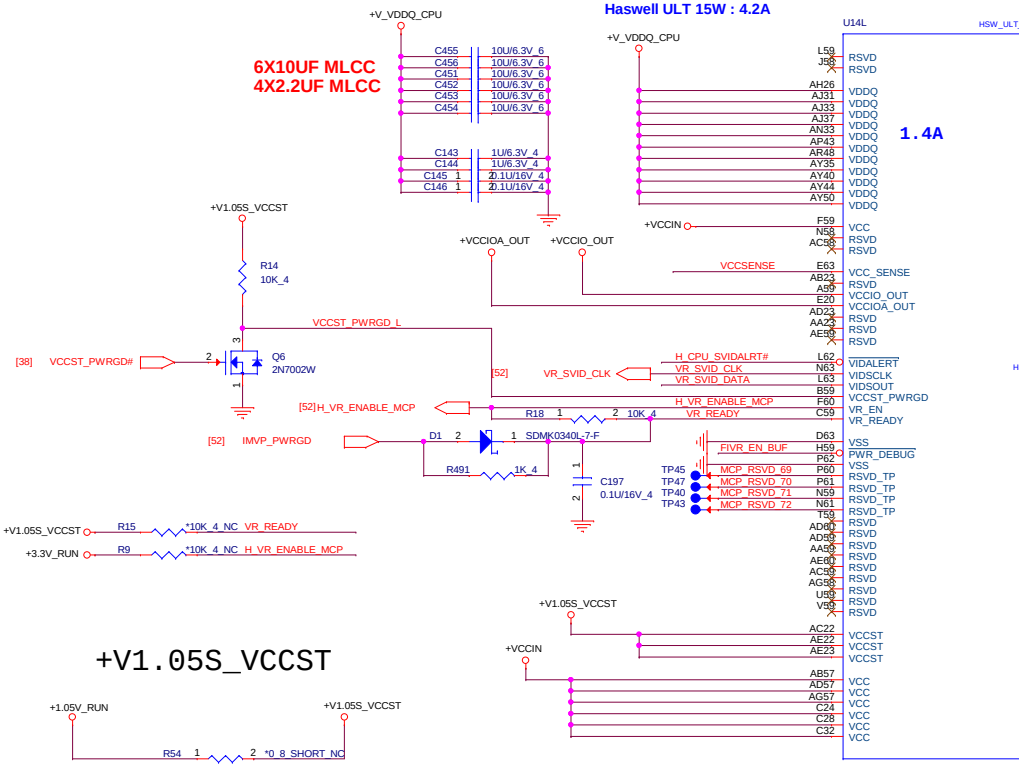

CPU VCC

Haswell ULT 15W : 32A

1/21: 22Ux23 --> 10Ux23

23 X 22UF(0805 MLCC)

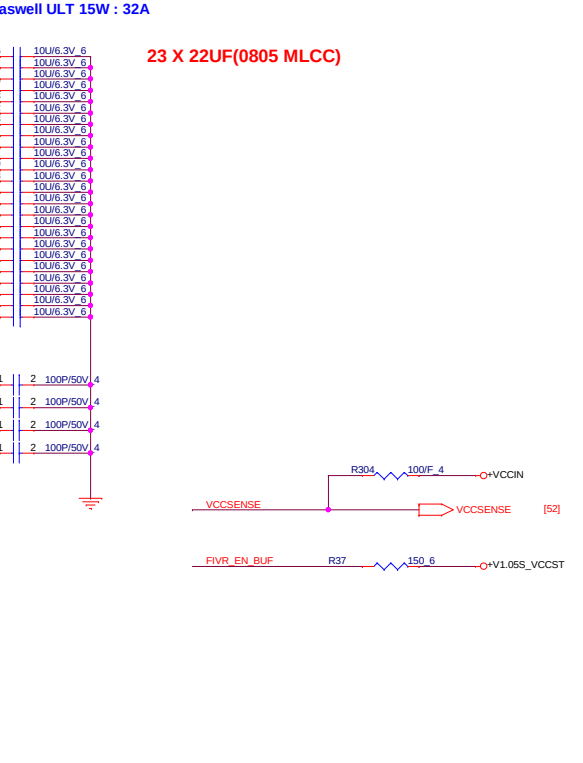

+V1.05S_VCCST

S3 Power reduce

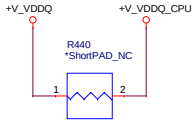

SVID ALERT

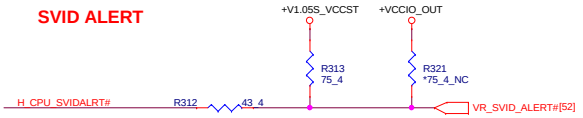

SVID DATA

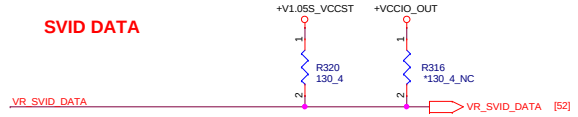

Quanta Computer Inc.		
PROJECT : JW8B		
Size	Document Number: Haswell ULT 8/12	Rev: A
Date: Monday, July 08, 2013	Sheet 14 of 57	

Haswell ULT (GND)

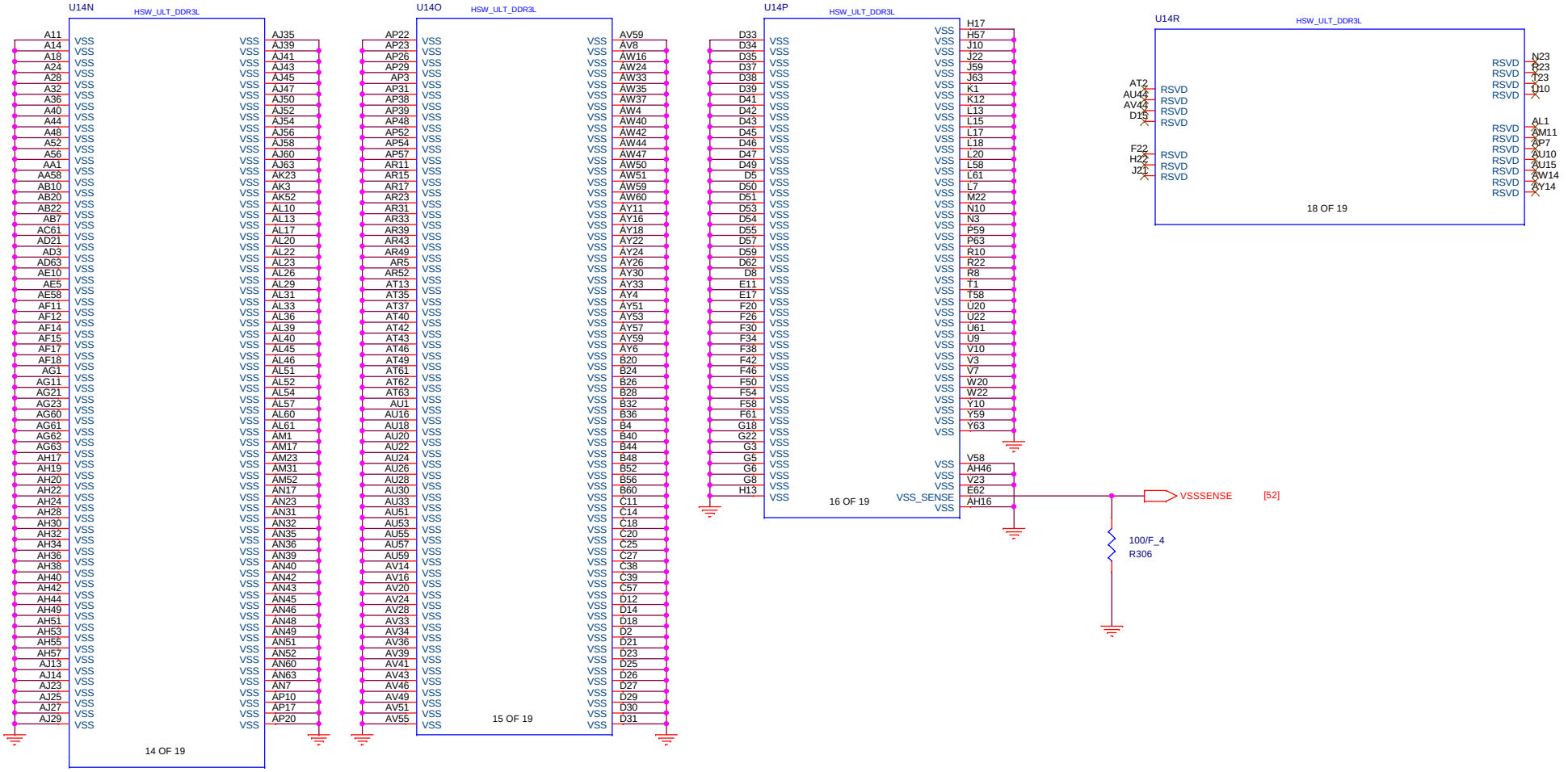

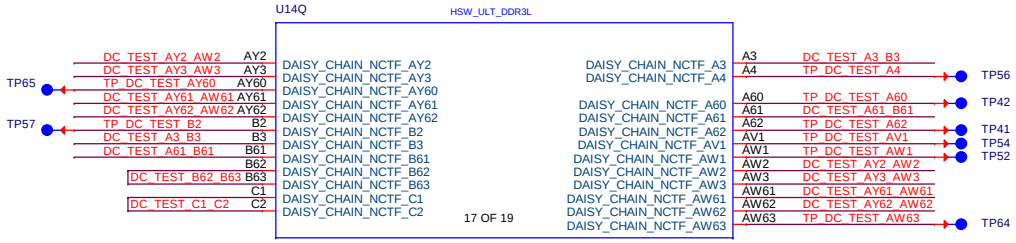

Quanta Computer Inc.		
PROJECT : JW8B		
Size	Document Number: Haswell ULT 9/12	Rev: A
Date: Wednesday, July 17, 2013	Sheet 15 of 57	

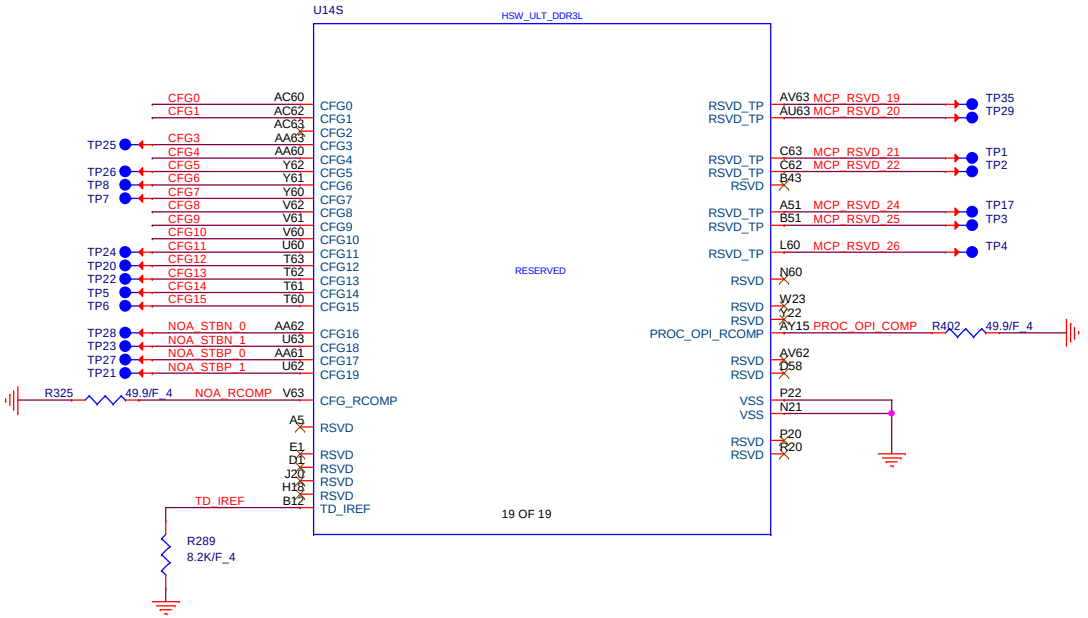

Processor Strapping

	1	0	
CFG0 EAR-STALL/NOT STALL RESET SEQUENCE AFTER PCU PLL IS LOCKED	(DEFAULT) NORMAL OPERATION; NO STALL	STALL	CFG0 R339 *1K_4_NC
CFG1 PCH/ PCH LESS MODE SELECTION	(DEFAULT) NORMAL OPERATION	PCH-LESS MODE	CFG1 R334 *1K_4_NC
CFG3 PHYSICAL_DEBUG_ENABLED (DFX PRIVACY)	DISABLED NO PHYSICAL DISPLAY PORT ATTACHED TO EMBEDDED DISPLAY PORT	ENABLED AN EXTERNAL DISPLAY PORT DEVICE IS CONNECTED TO THE EMBEDDED DISPLAY PORT	CFG3 R330 *1K_4_NC
CFG4 DISPLAY PORT PRESENCE STRAP	DISABLED NO PHYSICAL DISPLAY PORT ATTACHED TO EMBEDDED DISPLAY PORT	ENABLED AN EXTERNAL DISPLAY PORT DEVICE IS CONNECTED TO THE EMBEDDED DISPLAY PORT	CFG4 R61 1K_4
CFG 8 ALLOW THE USE OF NOA ON LOCKED UNITS	DISABLED(DEFAULT); IN THIS CASE, NOA WILL BE DISABLED IN LOCKED UNITS AND ENABLED IN UN-LOCKED UNITS	ENABLED; NOA WILL BE AVAILABLE REGARDLESS OF THE LOCKING OF THE UNIT	CFG8 R326 *1K_4_NC
CFG9 NO SVID PROTOCOL CAPABLE VR CONNECTED	VRS SUPPORTING SVID PROTOCOL ARE PRESENT	NO VR SUPPORTING SVID IS PRESENT. THE CHIP WILL NOT GENERATE (OR RESPOND TO) SVID ACTIVITY	CFG9 R58 *1K_4_NC
CFG10 SAFE MODE BOOT	POWER FEATURES ACTIVATED DURING RESET	POWER FEATURES (ESPECIALLY CLOCK GATINE ARE NOT ACTIVATED	CFG10 R57 *1K_4_NC

Haswell ULT PCH(POWER)

3.3 SUS: 205mA
1.05 SUS: 2066mA
1.05 RUN: 2578mA
3.3 RUN: 58mA

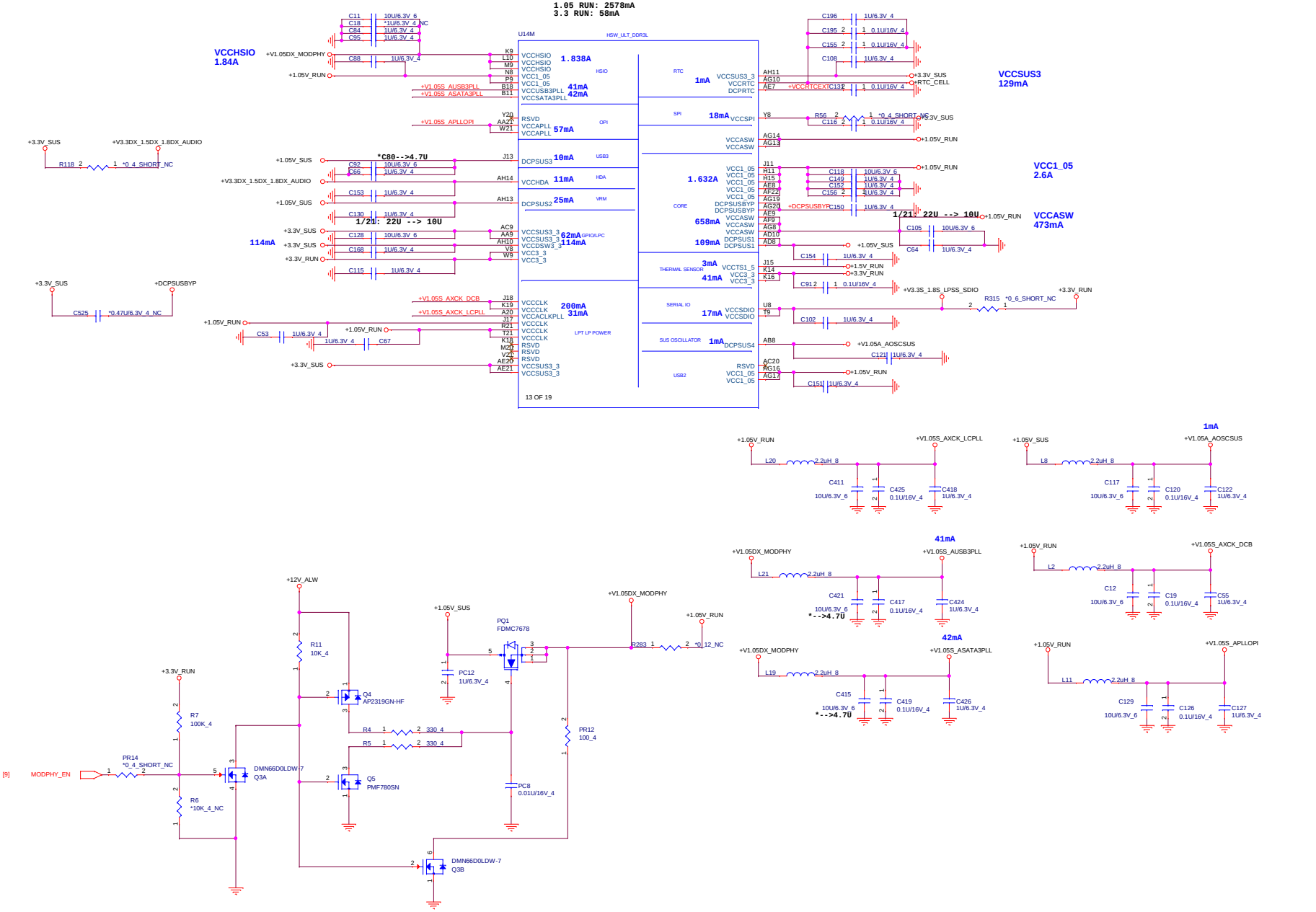

Quanta Computer Inc.
PROJECT : JW8B

Size	Document Number	Rev
	Haswell ULT 11/12	A

Date: Monday, July 08, 2013 Sheet 17 of 57

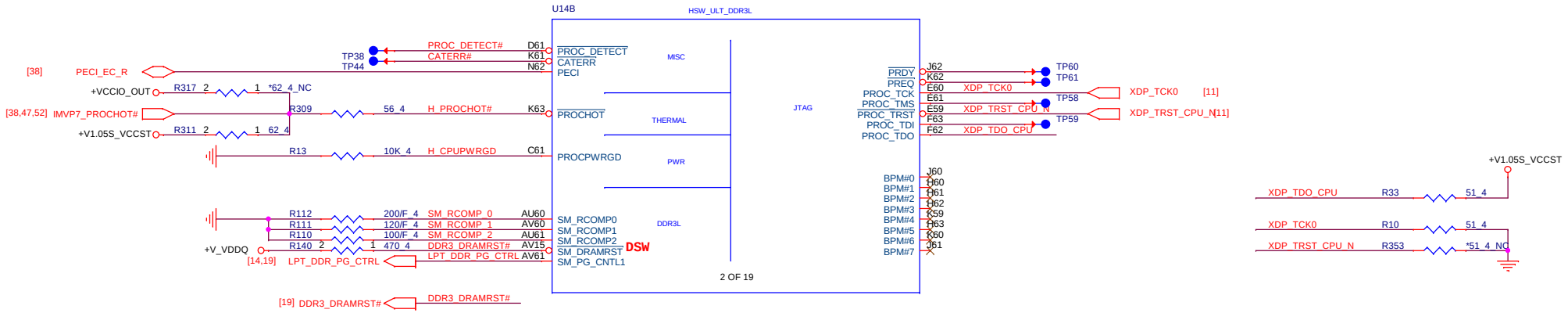

Quanta Computer Inc.		
PROJECT : JW8B		
Size	Document Number: Haswell ULT 12/12	Rev: A
Date: Friday, May 10, 2013	Sheet 18 of 57	

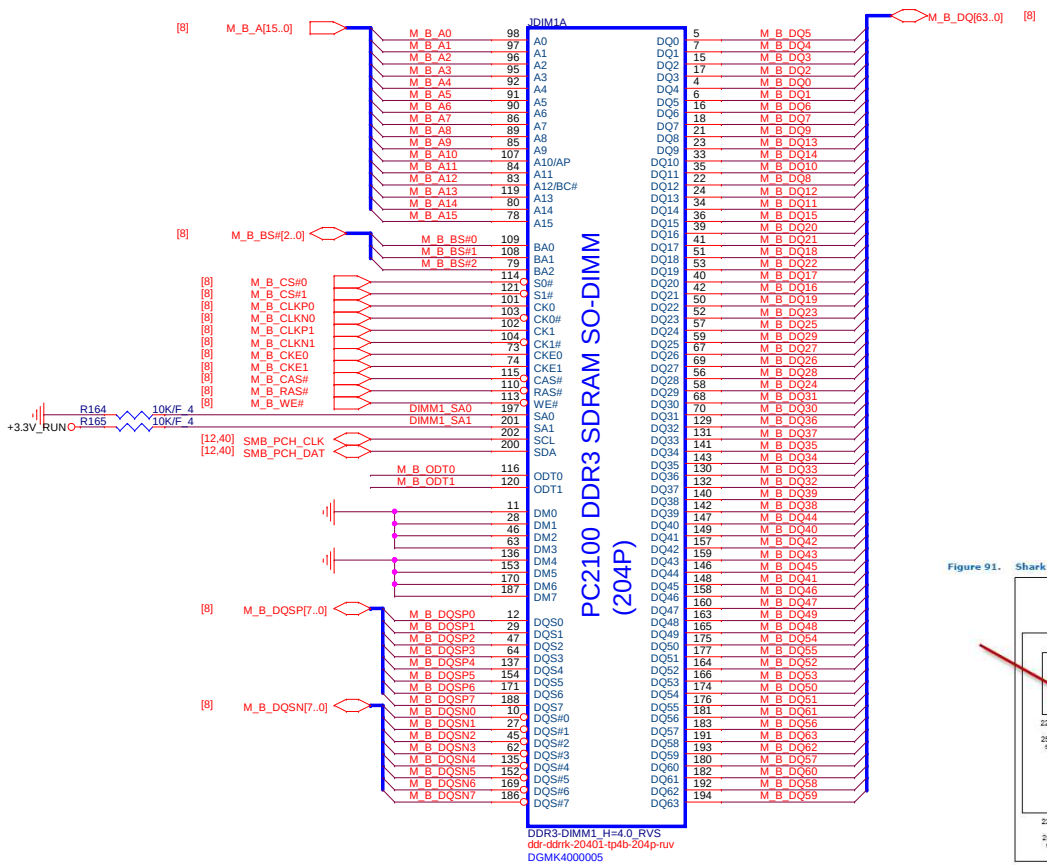

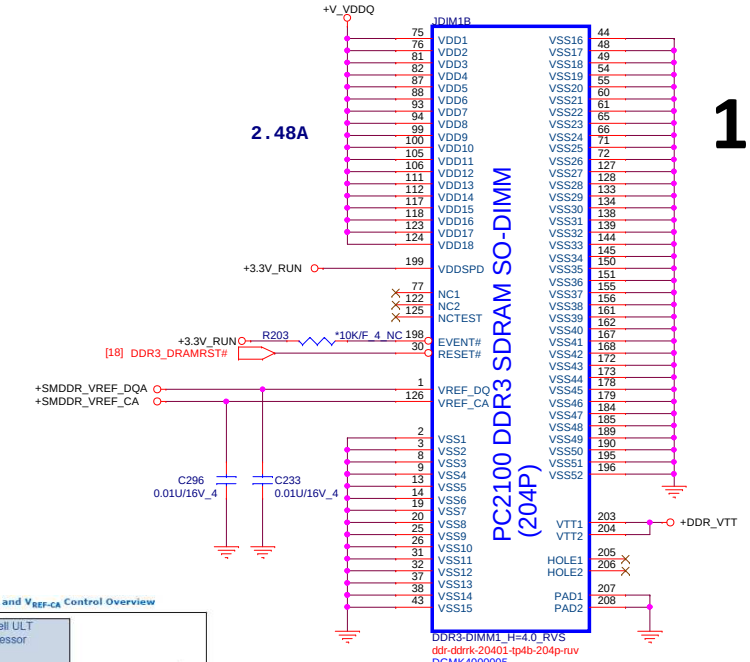

Figure 91. Shark Bay ULT DDR3L SODIMM V_{REF-DQ} and V_{REF-CA} Control Overview

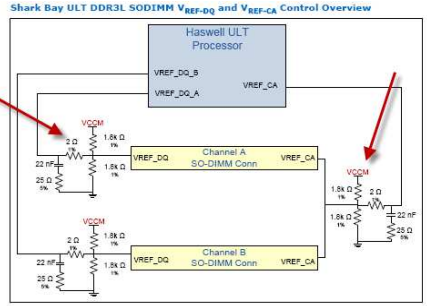

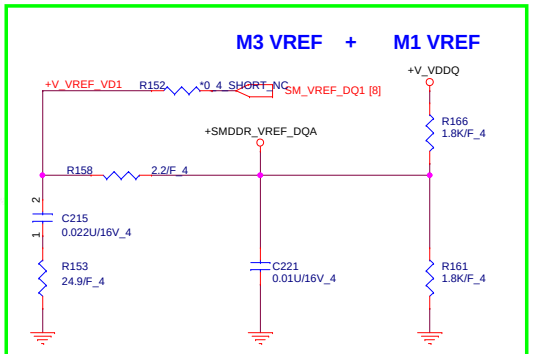

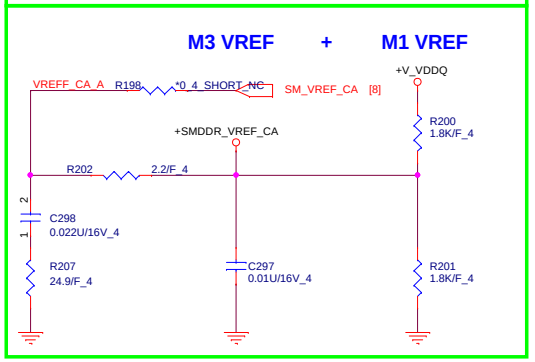

DDR3L SODIMM ODT GENERATION

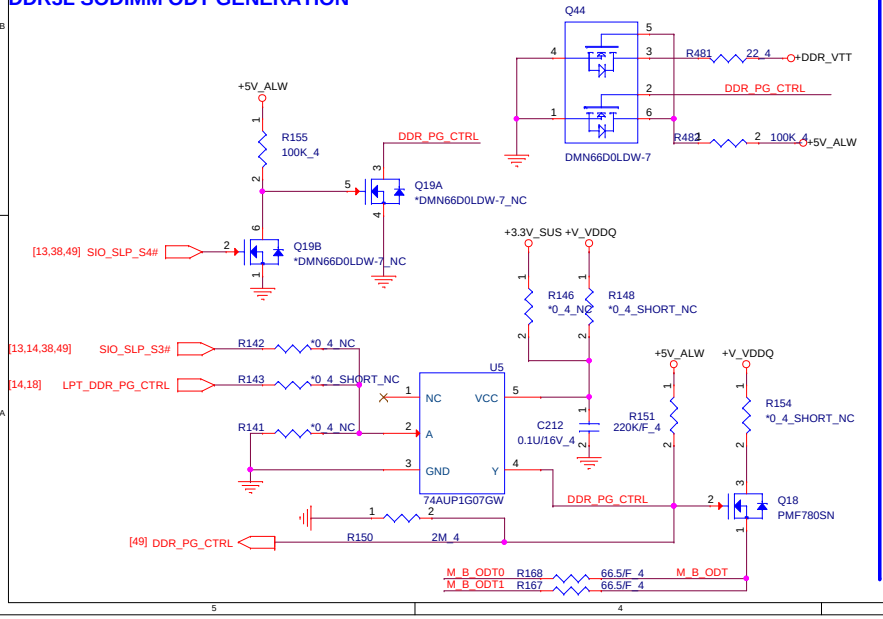

Place these Caps near So-Dimm1.

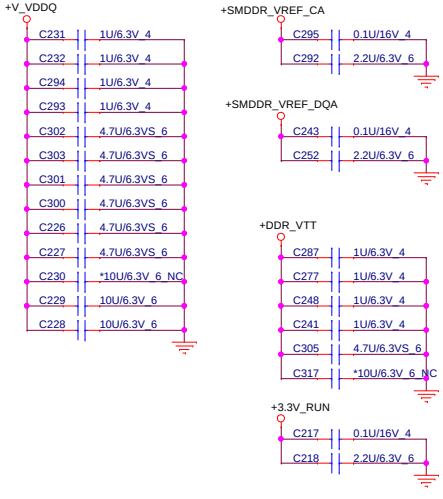

Quanta Computer Inc.			
PROJECT : JW8B			
Size	Document Number		Rev
	System Memory (4.0H)		A
Date: Monday, July 08, 2013		Sheet 19 of 57	

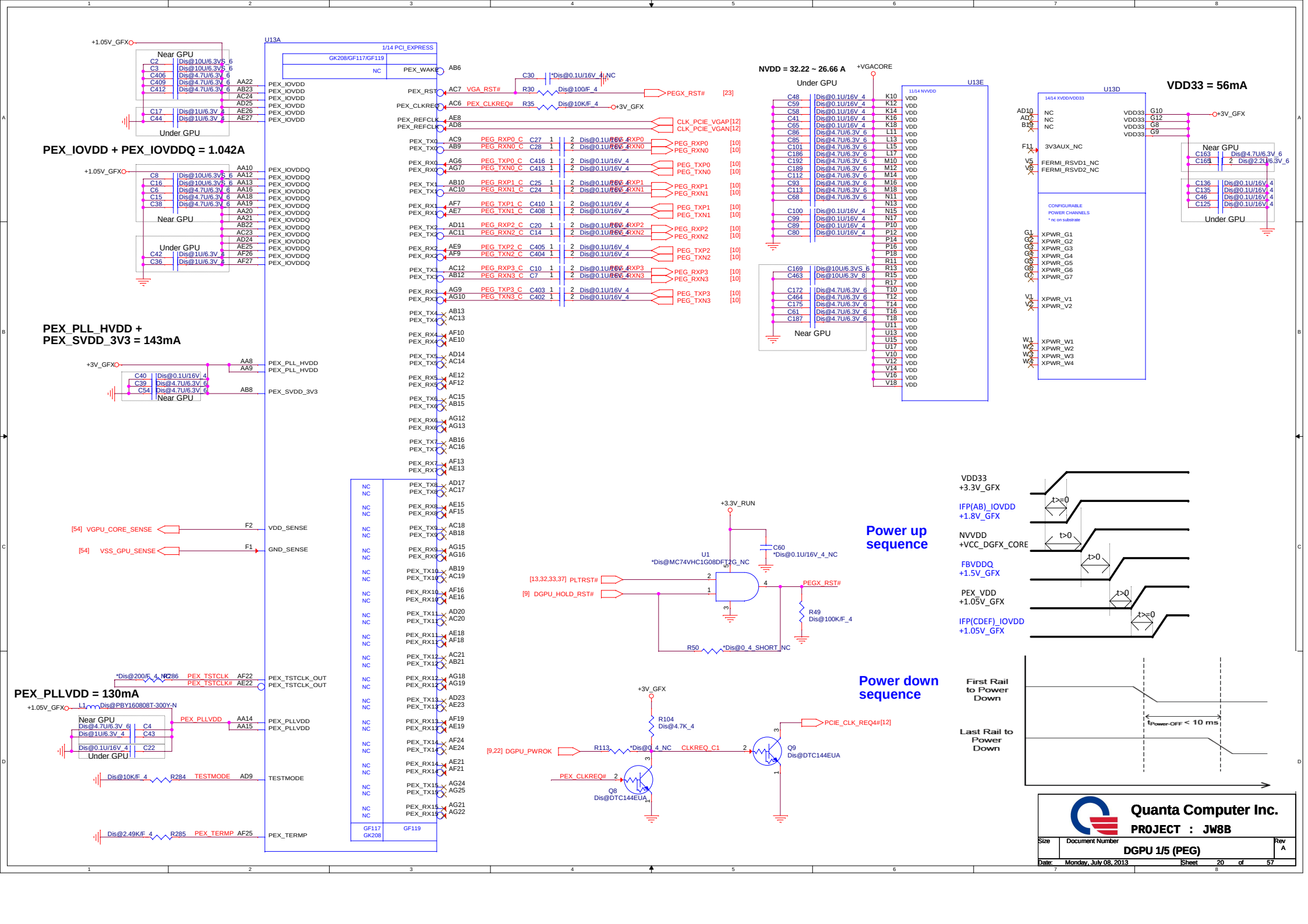
PEX_IOVDD + PEX_IOVDDQ = 1.042A
PEX_PLL_HVDD +
PEX_SVDD_3V3 = 143mA
PEX_PLLVDD = 130mA
NVDD = 32.22 ~ 26.66 A
VDD33 = 56mA
Power up sequence
Power down sequence
Quanta Computer Inc.
PROJECT : JW8B
DGPU 1/5 (PEG)
Monday, July 08, 2013

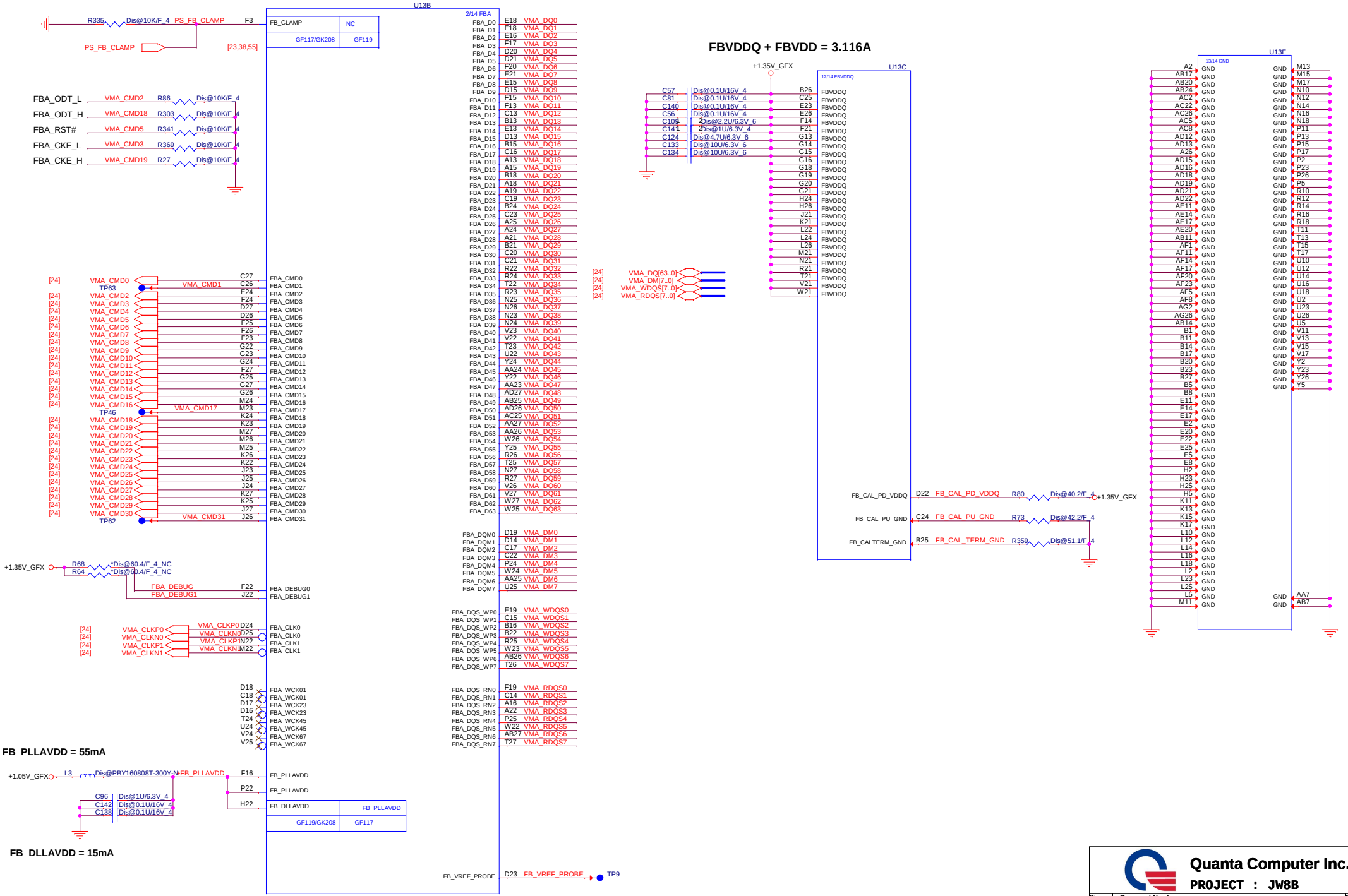
FBVDDQ + FBVDD = 3.116A
U13B
2/14 FBA
U13C
12/14 FBVDDQ
U13F
13/14 GND
FB_PLLAVDD = 55mA
FB_DLLAVDD = 15mA
Quanta Computer Inc.
PROJECT : JW8B
DGPU 2/5 (Memory)
Rev A
Size
Document Number
Date: Thursday, June 13, 2013
Sheet 21 of 57

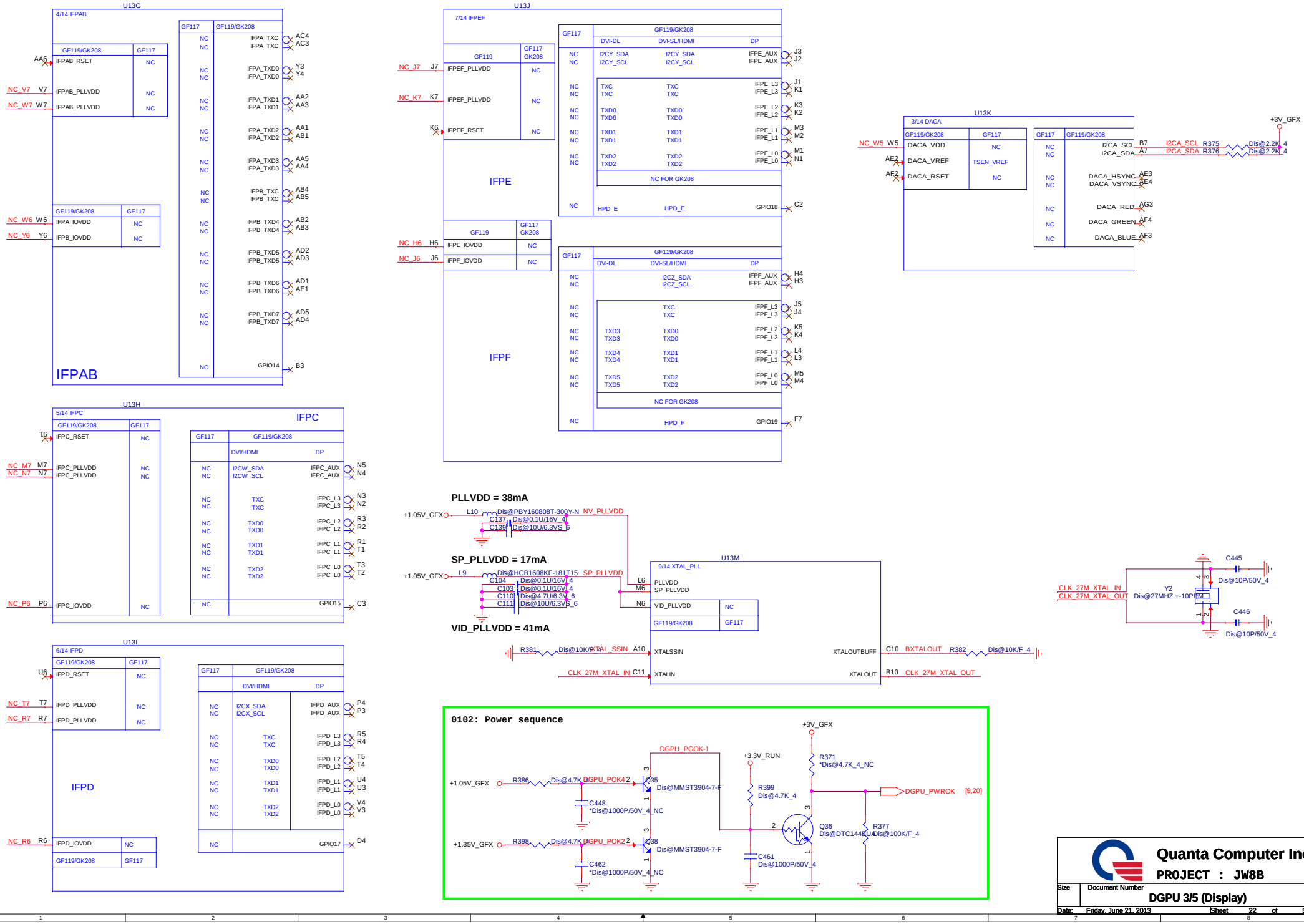
U13G
4/14 IFPAB
IFPAB
U13J
7/14 IFPEF
IFPE
IFPF
U13K
3/14 DACA
U13H
5/14 IFPC
IFPC
U13I
6/14 IFPD
IFPD
U13M
9/14 XTAL_PLL
PLLVDD = 38mA
SP_PLLVDD = 17mA
VID_PLLVDD = 41mA
0102: Power sequence
Quanta Computer Inc.
PROJECT : JW8B
DGPU 3/5 (Display)
Size
Document Number
Rev
A
Date: Friday, June 21, 2013
Sheet 22 of 57

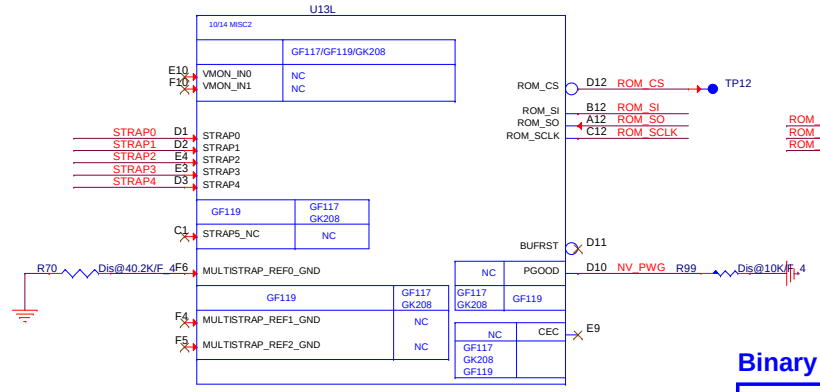

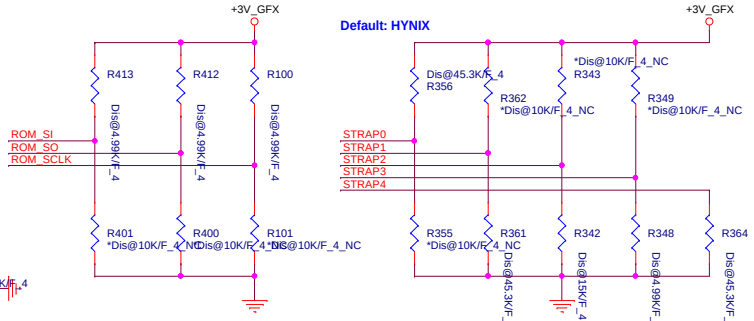

4.99K: CS24992FB00 RES CHIP 4.99K 1/16W +-1% (0402)
45K: CS34502FB00 RES CHIP 45K 1/16W +-1%(0402)
15K: CS31502FB24 RES CHIP 15K 1/16W +-1% (0402)
30.1K: CS33012FB18 RES CHIP 30.1K 1/16W +-1%(0402)
34.8K : CS33482FB22 RES CHIP 34.8K 1/16W +-1% (0402)

Binary Strap Mode Mapping

Strap Pin name	Strap Mapping	Resistance	Note
ROM_SCLK	PCI_DEVID[4] SUB_VENOOR PCI_DEVID[5] PEX_PLL_EN	5Kohm , H	1000 , SUB: no Video BIOS
ROM_SI	RAM_CFG[2] RAM_CFG[1] RAM_CFG[0]	5Kohm , H	4.99K 1000 --> Micron MT41K128M16JT-107G:K (Default) 30.1K 1101 --> Micron MT41K256M16HA-107G:E 34.8K 1110 --> Hynix H5TC4G63AFR-11C
ROM_SO	FB[1] FB[0] SMB_ALT_ADDR VGA_DEVICE	5Kohm , H	1000 , FB: 256 MB (Default) SMB:0x9E
STRAP0	User strap [3:0]	45Kohm , H	1111 , EDID is used
STRAP1	3GIO_CFG[3:0]	45Kohm , D	1111 , USER defined
STRAP2	PCI_DEVID[3:0]	15Kohm , D	010010 , N14P-GV2
STRAP3	SOR[3:0]_EXPOSED	5Kohm , D	0000 , IFPx port not use
STRAP4	RESERVED PCIE_SPEED_GEN3 PCIE_MAX_SPEED DP_PLL_VDD33V	45Kohm , D	0111 , PCIE GEN3 setting

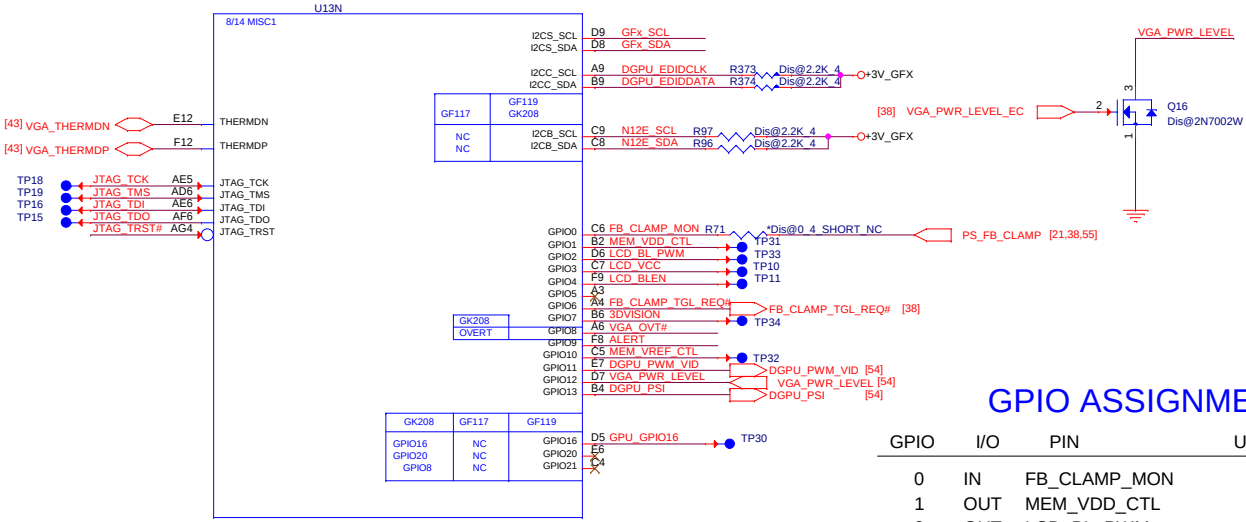

GPIO ASSIGNMENTS (GB2-64)

GPIO	I/O	PIN	USAGE
0	IN	FB_CLAMP_MON	FB Clamp monitor
1	OUT	MEM_VDD_CTL	MEMORY VDD ID
2	OUT	LCD_BL_PWM	LCD BACKLIGHT PWM
3	OUT	LCD_VCC	PANEL POWER ENABLE
4	OUT	LCD_BLEN	PANEL BACKLIGHT ENABLE
5		RESERVE	
6	OUT	FB_CLAMP_TGL_REQ#	# --> FB Clamp toggle request
7	OUT	3DVision	3D VISION LEFT/RIGHT VISION
8	I/O	OVERT	ACTIVE LOW THERMAL OVER TEMP
9	I/O	ALERT	ACTIVE LOW THERMAL ALERT
10	OUT	MEM_VREF_CTL	MEMMORY VREF CONTROL
11	OUT	PWM_VID	GPU Core VDD PWM control
12	IN	PWR_LEVEL	Power Detect ,HIGH=AC, LOW=DC
13	OUT	PSI	Phase Shedding
14	IN	HPD_A	HOT PLUG DETECT FOR IFPAB
15	IN	HPD_C	HOT PLUG DETECT FOR IFPC
16	OUT	FRM_LCK	MEMMORY VDD CONTROL
17	IN	HPD_D	HOT PLUG DETECT FOR IFPD
18	IN	HPD_E	HOT PLUG DETECT FOR IFPE
19	IN	HPD_F or HPD_B	HOT PLUG DETECT FOR IFPF
20/21		RESERVE	

VRAM Configuration Table

RAMCFG [3:0]	DESCRIPTION	Vendor	DELL P/N	QCI P/N
0000 1000 0x8	MT41K128M16JT-107G:K (FCBGA)(96P)	Micron	NA	AKD5DGSTL00
1101 0xD	MT41K256M16HA-107G:E	Micron	NA	AKD5PGSTL00
1110 0xE	H5TC4G63AFR-11C	Hynix	NA	AKD5PGWTW05

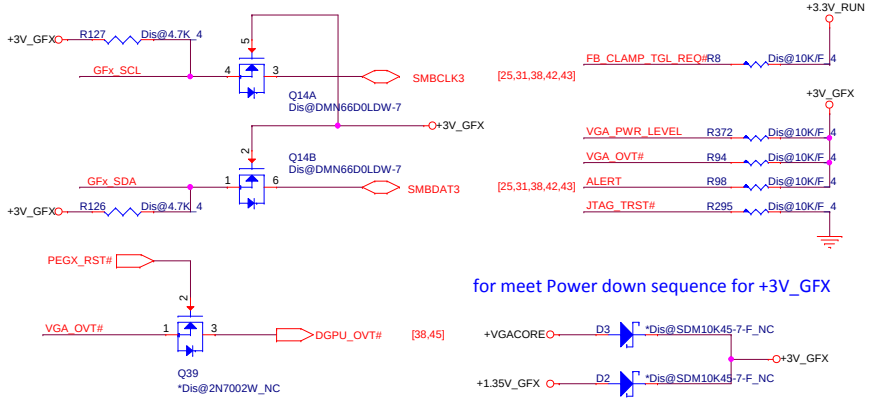

for meet Power down sequence for +3V_GFX

Quanta Computer Inc.
PROJECT : JW8B

Size	Document Number	Rev
	DGPU 4/5 (MIO/GPIO)	A

Date: Monday, July 08, 2013 Sheet 23 of 57

CHANNEL A: 256MB/512MB DDR3

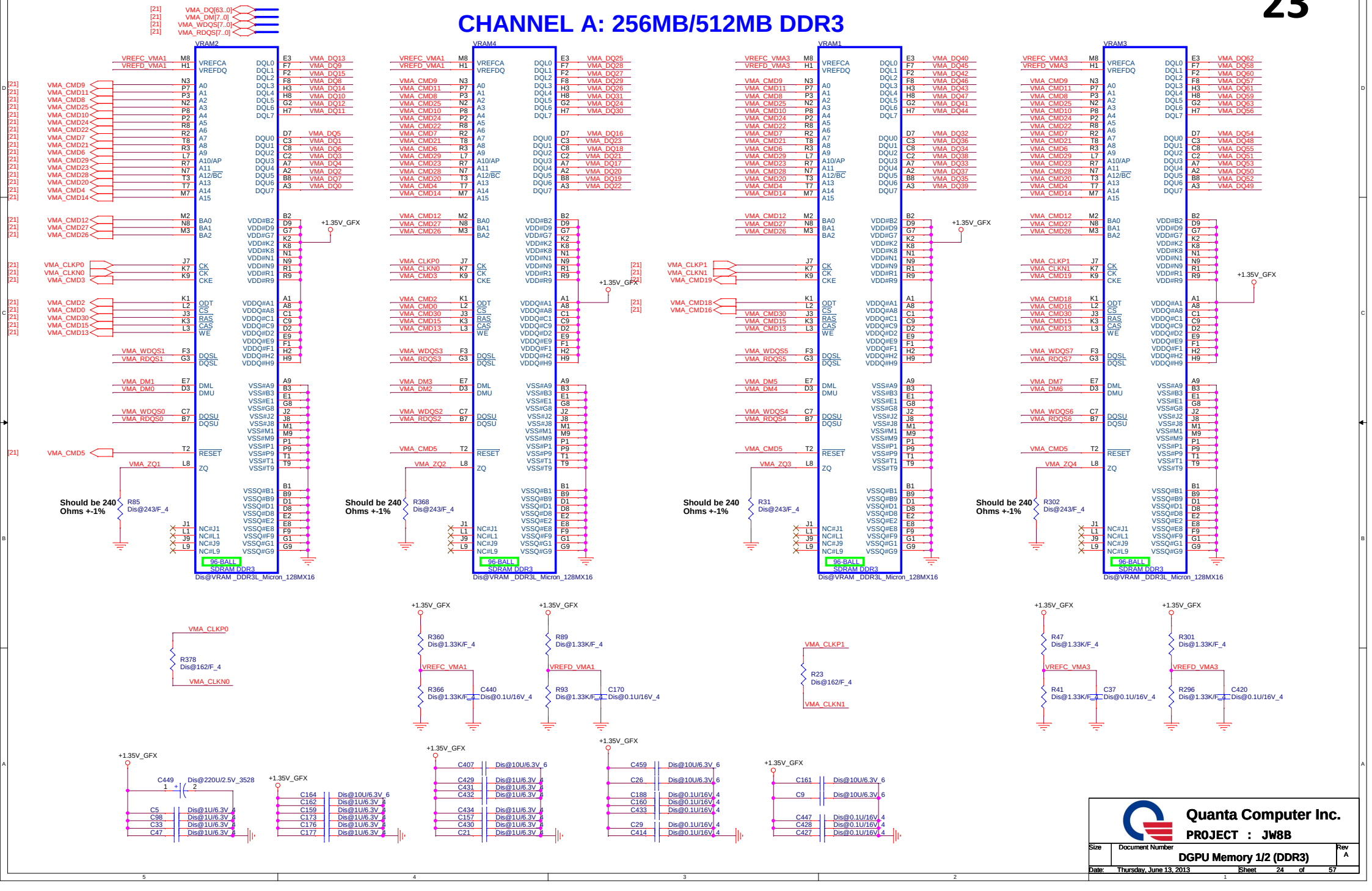

Quanta Computer Inc.

PROJECT : JW8B

Size	Document Number	Rev
	DGPU Memory 1/2 (DDR3)	A

Date: Thursday, June 13, 2013 Sheet 24 of 57

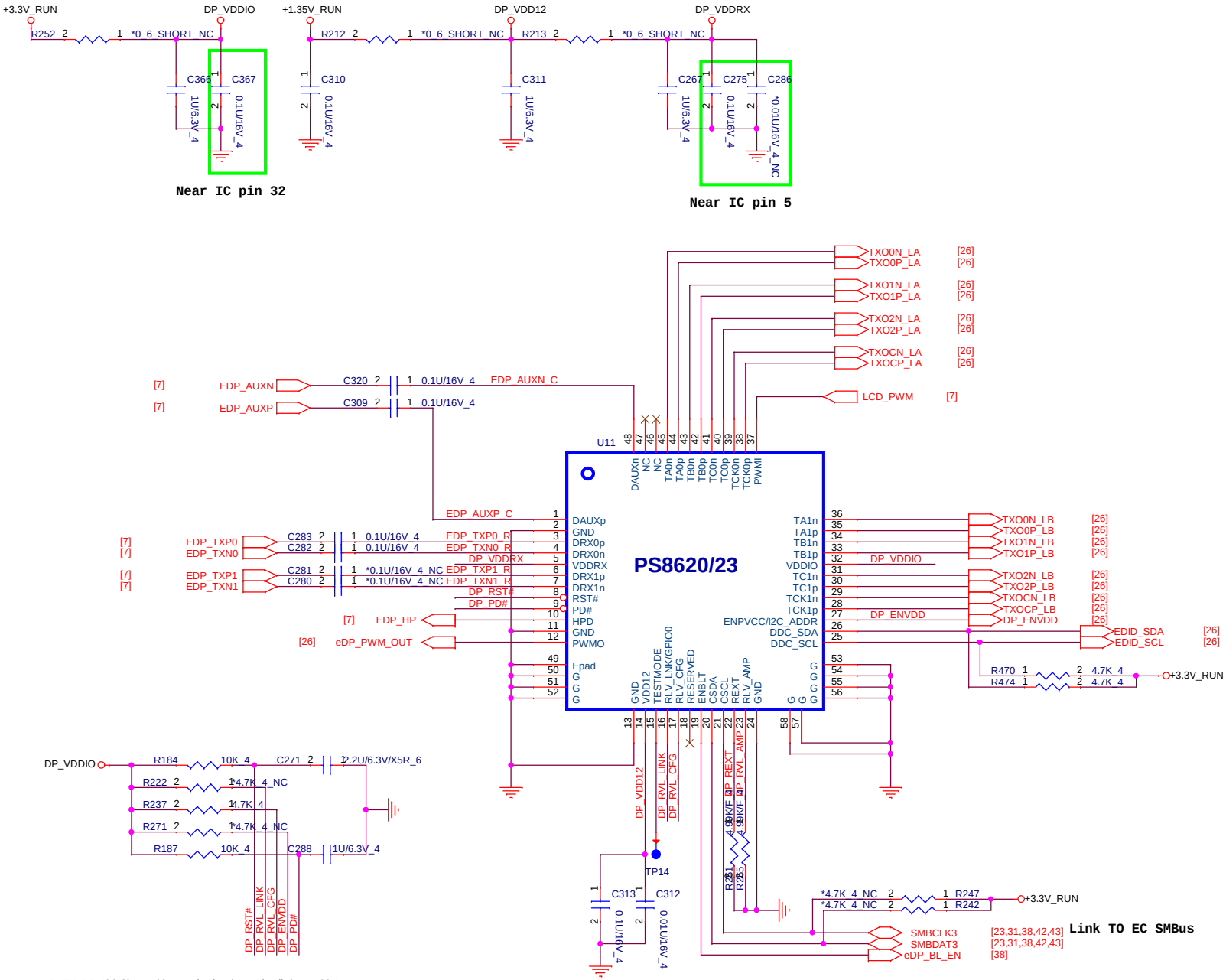

DP_ENVDD: I2C Slave address selection, internal pull-down ~80K
L: 0x10h~0x1Fh
H: 0x90h~0x9Fh

DP_RVL_LINK: LVDS single link or dual link selection, internal pull-down ~80K
L: Single link LVDS
H: Dual link LVDS

Quanta Computer Inc.		
PROJECT : JW8B		
Size	Document Number: eDP to LVDS (PS8620/23)	Rev: A
Date: Monday, July 08, 2013	Sheet 25 of 57	

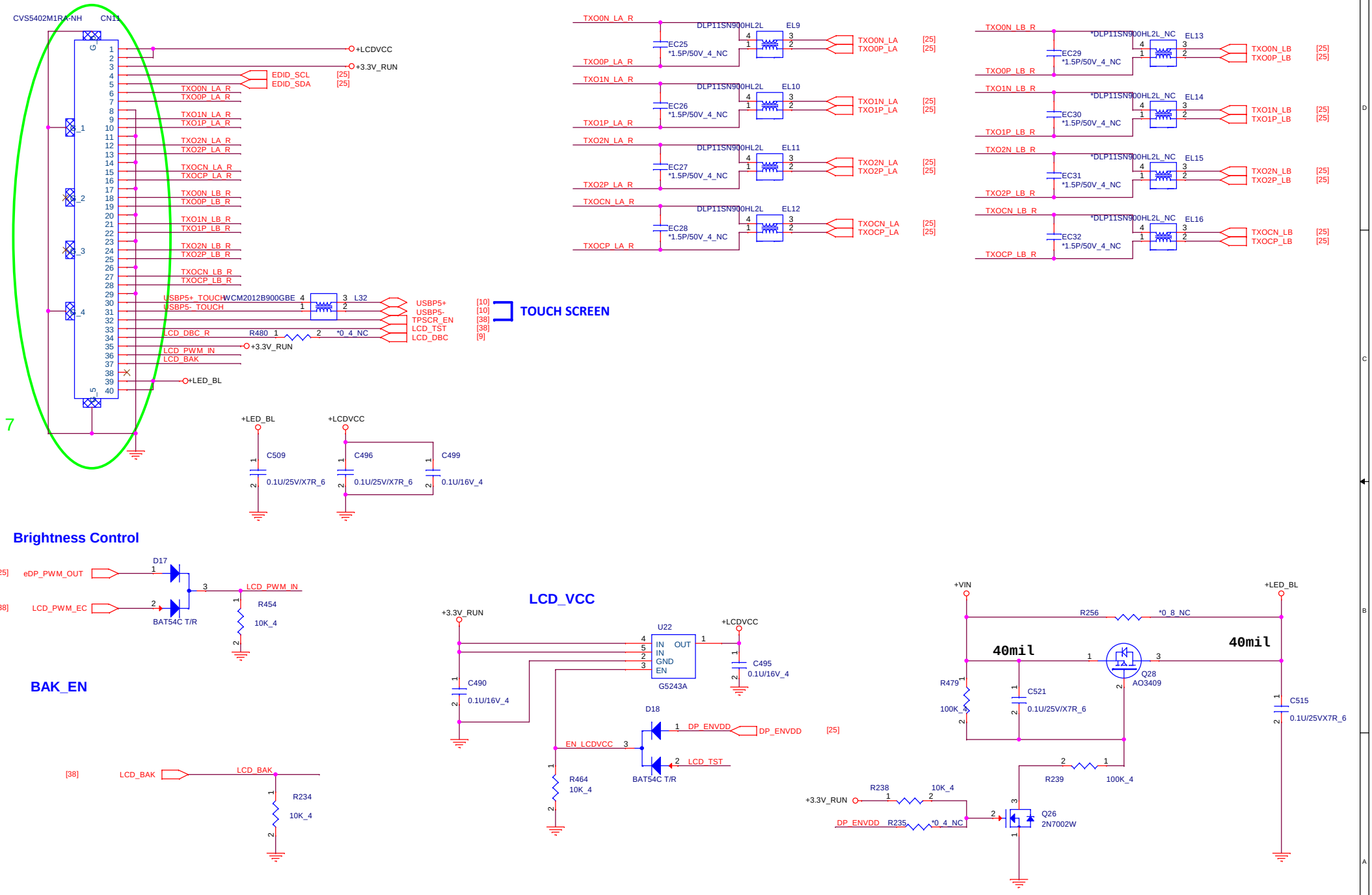

7

Quanta Computer Inc.		
PROJECT : JW8B		
Size	Document Number: LVDS CONN	Rev: A
Date: Wednesday, July 17, 2013	Sheet 26 of 57	

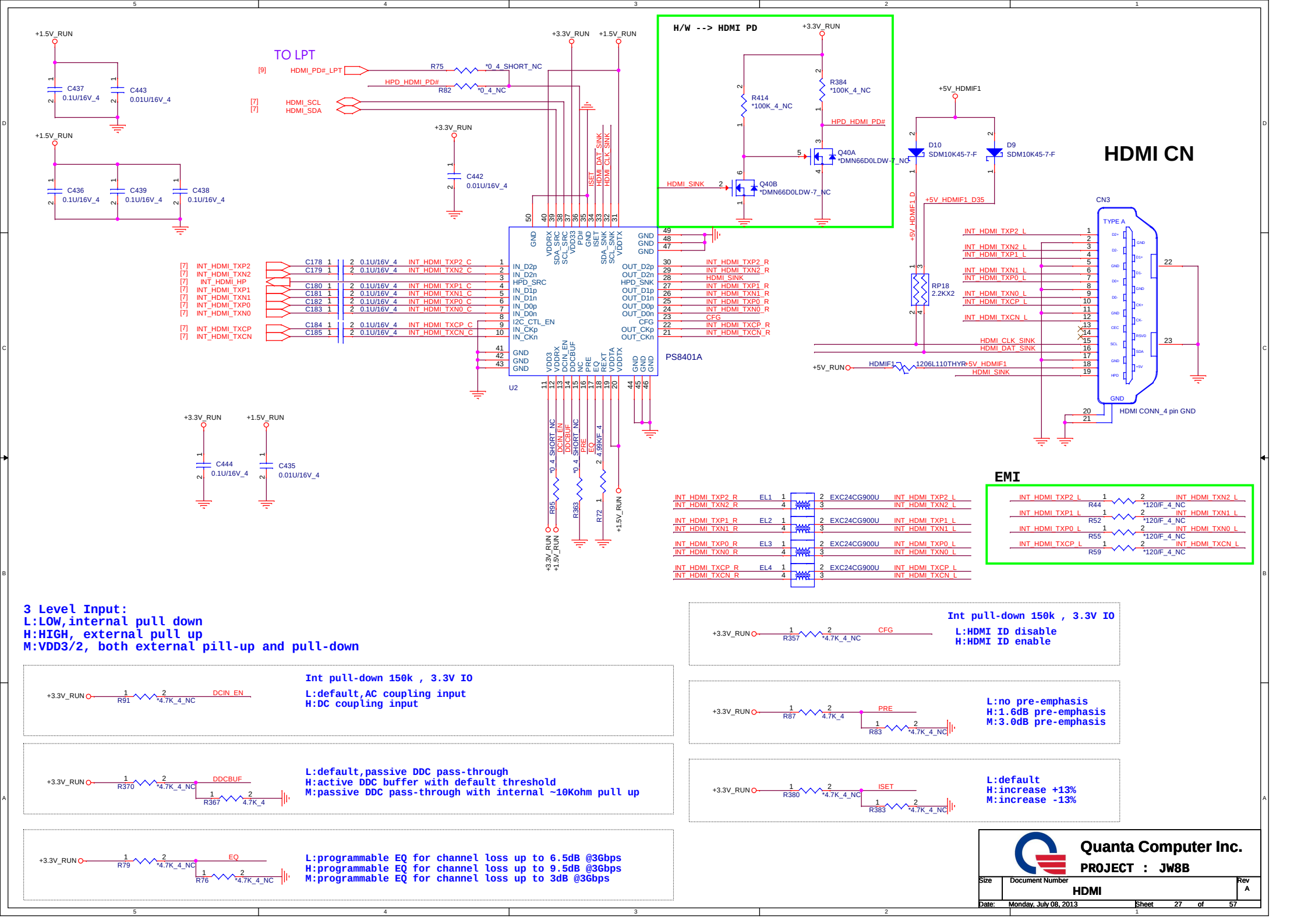
TO LPT
H/W --> HDMI PD
HDMI CN
EMI
PS8401A
U2
CN3
HDMI CONN_4 pin GND
3 Level Input:
L:LOW,internal pull down
H:HIGH, external pull up
M:VDD3/2, both external pill-up and pull-down
Int pull-down 150k , 3.3V IO
L:HDMI ID disable
H:HDMI ID enable
Int pull-down 150k , 3.3V IO
L:default,AC coupling input
H:DC coupling input
L:no pre-emphasis
H:1.6dB pre-emphasis
M:3.0dB pre-emphasis
L:default,passive DDC pass-through
H:active DDC buffer with default threshold
M:passive DDC pass-through with internal ~10Kohm pull up
L:default
H:increase +13%
M:increase -13%
L:programmable EQ for channel loss up to 6.5dB @3Gbps
H:programmable EQ for channel loss up to 9.5dB @3Gbps
M:programmable EQ for channel loss up to 3dB @3Gbps
Quanta Computer Inc.
PROJECT : JW8B
Size
Document Number
HDMI
Rev
A
Date: Monday, July 08, 2013
Sheet 27 of 57

CAMERA / DMIC

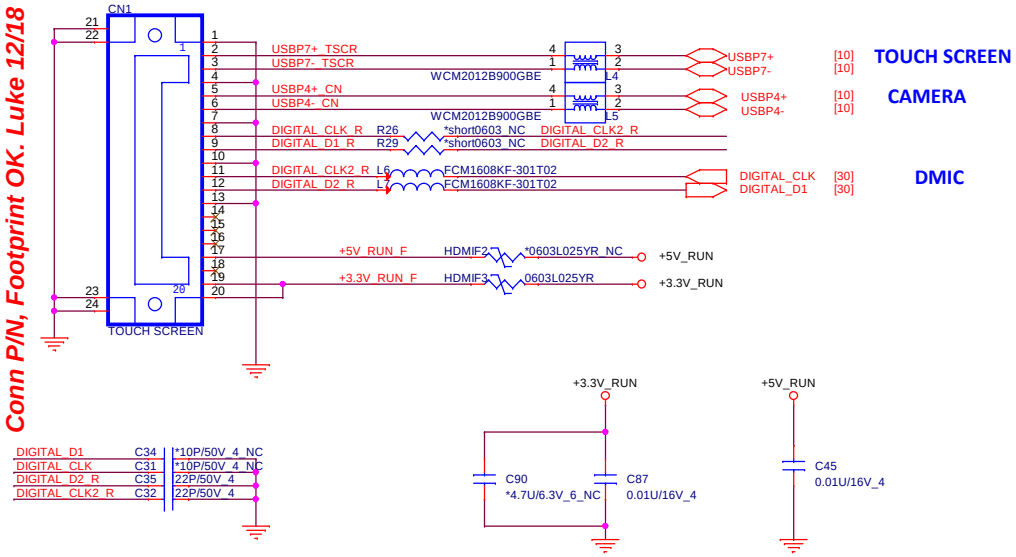

Conn P/N, Footprint OK. Luke 12/18

Fingerprint

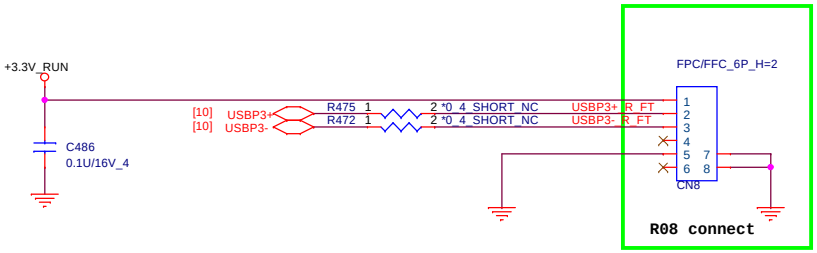

Quanta Computer Inc.			
PROJECT : JW8B			
Size	Document Number		Rev
	Camera/Fingerprint Conn		A
Date: Monday, July 08, 2013	Sheet 28 of 57		

Mini-PCIE

H15
h-tc236bc130d130pt

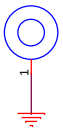

H16
h-tc236bc130d130pt

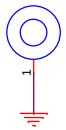

CPU BKT

H8
*INTEL-BKT-SHARK-ULT

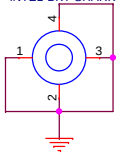

H7
*H-TC394BC315D130P2

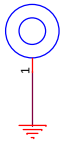

H10
*h-tc394bc315d138p2

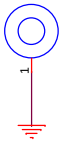

H11
*h-tc394bc315d138p2

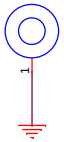

H13
*h-tc394bc315d138p2

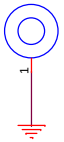

H14
*h-tc276bc315d118p2

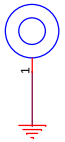

H3
*h-tc236bc315d98p2

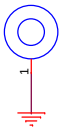

H4
*h-tc236bc315d98p2

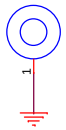

H6
*H-TSBC315D98P2

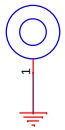

H12
*h-tc236bc315d98p2

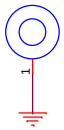

H5
*h-tc315bc150d150pt

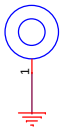

H9
*h-tc315i190bc150d150pt

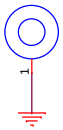

H1
*h-c59d59n

H2
*h-c59d59n

Title	<Title>	
Size Custom	Document Number <Doc>	Rev A
Date: Friday, May 10, 2013	Sheet 29 of 57	

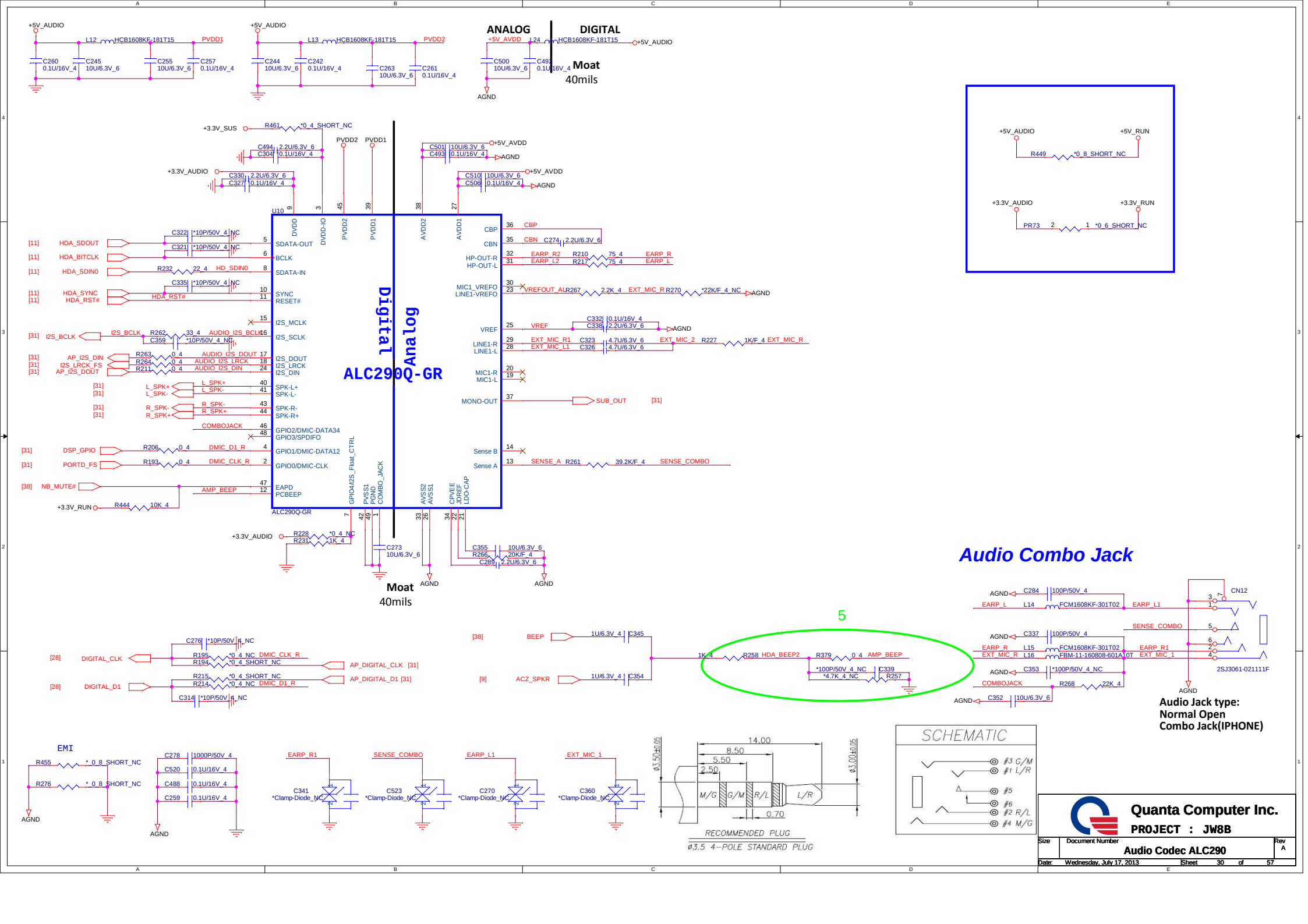
+5V_AUDIO
L12 HCB1608KF-181T15 PVDD1
C260 0.1U/16V_4
C245 10U/6.3V_6
C255 10U/6.3V_6
C257 0.1U/16V_4
+5V_AUDIO
L13 HCB1608KF-181T15 PVDD2
C244 10U/6.3V_6
C242 0.1U/16V_4
C263 10U/6.3V_6
C261 0.1U/16V_4
ANALOG
DIGITAL
+5V_AVDD
L24 HCB1608KF-181T15
+5V_AUDIO
C500 10U/6.3V_6
C492 0.1U/16V_4
AGND
Moat
40mils
+3.3V_SUS
R461 *0_4_SHORT_NC
C494 2.2U/6.3V_6
C304 0.1U/16V_4
PVDD2
PVDD1
C501 10U/6.3V_6
C493 0.1U/16V_4
+5V_AVDD
AGND
+3.3V_AUDIO
C330 2.2U/6.3V_6
C327 0.1U/16V_4
C510 10U/6.3V_6
C506 0.1U/16V_4
+5V_AVDD
AGND
U10
DVDD
DVDD-IO
PVDD2
PVDD1
AVDD2
AVDD1
ALC290Q-GR
Digital
Analog
ALC290Q-GR
[11] HDA_SDOUT
C322 *10P/50V_4_NC
SDATA-OUT
[11] HDA_BITCLK
C321 *10P/50V_4_NC
BCLK
[11] HDA_SDIN0
R232 22_4 HD_SDIN0
SDATA-IN
C335 *10P/50V_4_NC
[11] HDA_SYNC
[11] HDA_RST#
HDA_RST#
SYNC
RESET#
I2S_MCLK
[31] I2S_BCLK
I2S_BCLK R262 33_4 AUDIO_I2S_BCLK
C359 *10P/50V_4_NC
I2S_SCLK
[31] AP_I2S_DIN
[31] I2S_LRCK_FS
[31] AP_I2S_DOUT
R263 0_4 AUDIO_I2S_DOUT
R264 0_4 AUDIO_I2S_LRCK
R211 0_4 AUDIO_I2S_DIN
I2S_DOUT
I2S_LRCK
I2S_DIN
[31] L_SPK+
[31] L_SPK-
L_SPK+
L_SPK-
SPK-L+
SPK-L-
[31] R_SPK-
[31] R_SPK+
R_SPK-
R_SPK+
SPK-R-
SPK-R+
COMBOJACK
GPIO2/DMIC-DATA34
GPIO3/SPDIFO
[31] DSP_GPIO
R206 0_4 DMIC_D1_R
GPIO1/DMIC-DATA12
[31] PORTD_FS
R193 0_4 DMIC_CLK_R
GPIO0/DMIC-CLK
[38] NB_MUTE#
AMP_BEEP
EAPD
PCBEEP
+3.3V_RUN
R444 10K_4
GPIO4/I2S_Float_CTRL
PVSS1
PGND
COMBO_JACK
AVSS2
AVSS1
CPVEE
JDREF
LDO-CAP
CBP
CBN C274 2.2U/6.3V_6
HP-OUT-R
HP-OUT-L
EARP_R2 R210 75_4 EARP_R
EARP_L2 R217 75_4 EARP_L
MIC1_VREFO
LINE1-VREFO
VREFOUT_AL R267 2.2K_4 EXT_MIC_R R270 *22K/F_4_NC AGND
VREF
C332 0.1U/16V_4
C338 2.2U/6.3V_6
AGND
LINE1-R
LINE1-L
EXT_MIC_R1 C323 4.7U/6.3V_6 EXT_MIC_2 R227 1K/F_4 EXT_MIC_R
EXT_MIC_L1 C326 4.7U/6.3V_6
MIC1-R
MIC1-L
MONO-OUT
SUB_OUT [31]
Sense B
Sense A
SENSE_A R261 39.2K/F_4 SENSE_COMBO
+3.3V_AUDIO
R228 *0_4_NC
R231 1K_4
C273 10U/6.3V_6
C355 10U/6.3V_6
R266 20K/F_4
C289 2.2U/6.3V_6
AGND
Moat
40mils
+5V_AUDIO
+5V_RUN
R449 *0_8_SHORT_NC
+3.3V_AUDIO
+3.3V_RUN
PR73 *0_6_SHORT_NC
Audio Combo Jack
AGND
C284 100P/50V_4
EARP_L
L14 FCM1608KF-301T02
EARP_L1
CN12
SENSE_COMBO
C337 100P/50V_4
EARP_R
L15 FCM1608KF-301T02
EARP_R1
EXT_MIC_R
L16 FBM-11-160808-601A10T
EXT_MIC_1
C353 *100P/50V_4_NC
COMBOJACK
R268 22K_4
C352 10U/6.3V_6
2SJ3061-021111F
Audio Jack type:
Normal Open
Combo Jack(IPHONE)
5
[28] DIGITAL_CLK
C276 *10P/50V_4_NC
R195 *0_4_NC DMIC_CLK_R
R194 *0_4_SHORT_NC
AP_DIGITAL_CLK [31]
[28] DIGITAL_D1
R215 *0_4_SHORT_NC
R214 *0_4_NC DMIC_D1_R
AP_DIGITAL_D1 [31]
C314 *10P/50V_4_NC
[38] BEEP
1U/6.3V_4 C345
[9] ACZ_SPKR
1U/6.3V_4 C354
1K_4 R258 HDA_BEEP2
R379 0_4 AMP_BEEP
*100P/50V_4_NC
*4.7K_4_NC
C339
R257
EMI
R455 *_0_8_SHORT_NC
R276 *_0_8_SHORT_NC
AGND
C278 1000P/50V_4
C520 0.1U/16V_4
C488 0.1U/16V_4
C259 0.1U/16V_4
AGND
EARP_R1
C341 *Clamp-Diode_NC
SENSE_COMBO
C523 *Clamp-Diode_NC
EARP_L1
C270 *Clamp-Diode_NC
EXT_MIC_1
C360 *Clamp-Diode_NC
ø3.50±0.05
14.00
8.50
5.50
2.50
ø3.00±0.05
M/G
G/M
R/L
L/R
0.70
RECOMMENDED PLUG
ø3.5 4-POLE STANDARD PLUG
SCHEMATIC
#3 G/M
#1 L/R
#5
#6
#2 R/L
#4 M/G
Quanta Computer Inc.
PROJECT : JW8B
Size
Document Number
Audio Codec ALC290
Rev
A
Date: Wednesday, July 17, 2013
Sheet 30 of 57

Sub-Woofer

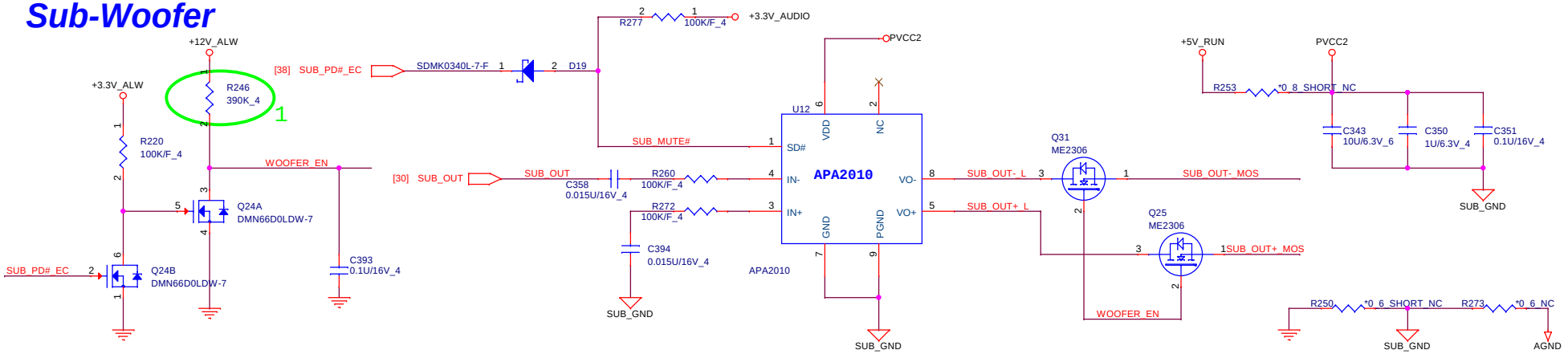

Audio Processor

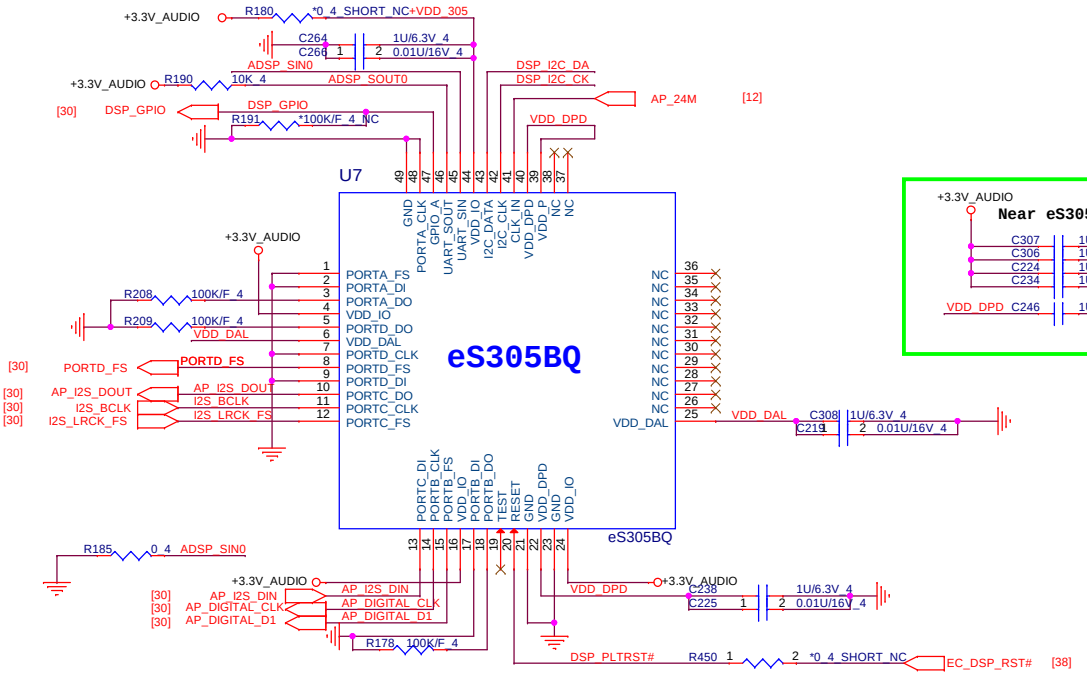

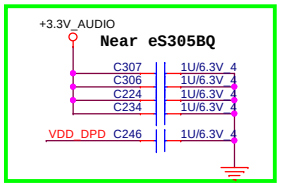

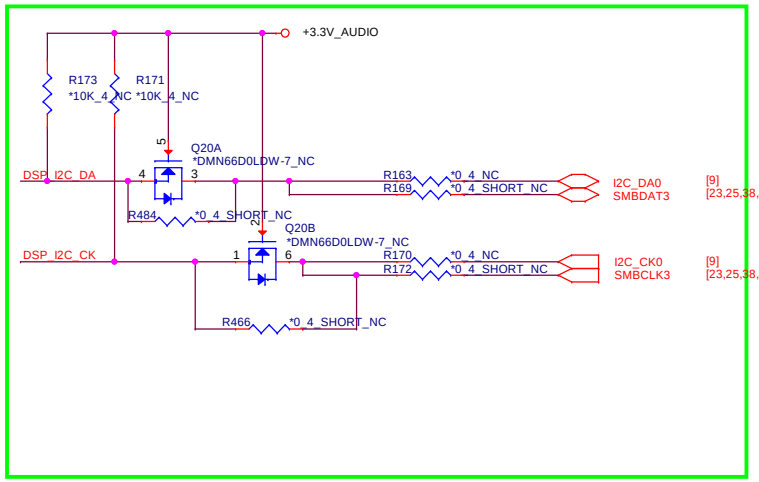

Int. Speaker

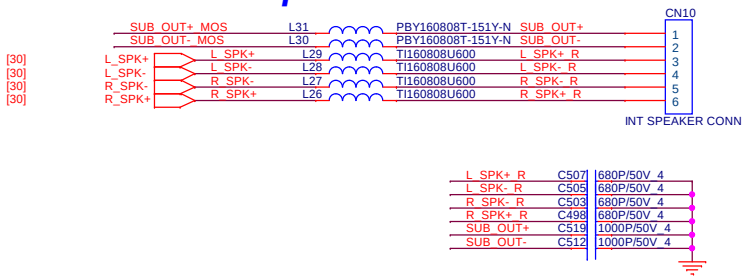

Quanta Computer Inc.

PROJECT : JW8B

Size	Document Number	Rev
	AudioDSP/TouchScreen/Subwoofer	A

Date: Wednesday, July 17, 2013 Sheet 31 of 57

JW8 have support S5 wave up

Each CAP near IC pin 3 , 8 , 22 , 30

near IC pin 22

near IC pin 23

Sw mode

FCE: NS692417, DB0KL3LAN02
BOT: NA0069R LF, DB0KL3LAN01

Quanta Computer Inc.
PROJECT : JW8B

Size	Document Number	Rev
	LAN(RTL8111GUS)/RJ45	A

Date: Monday, July 08, 2013 Sheet 32 of 57

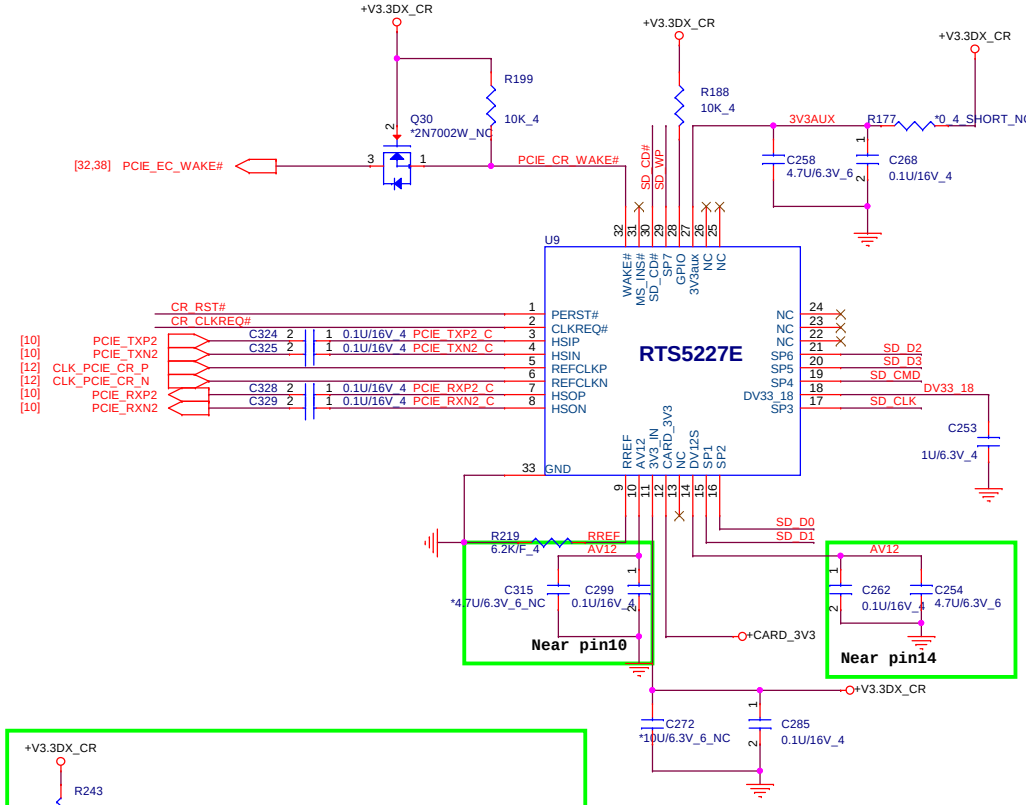

SD / MMC CARD READER

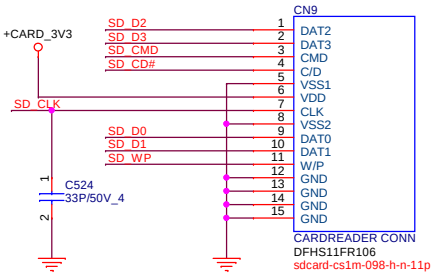

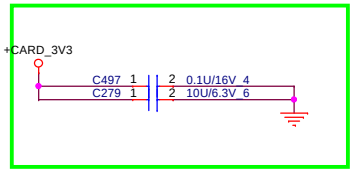

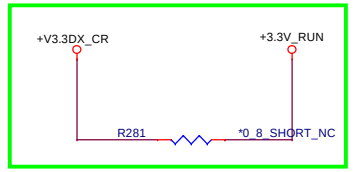

Quanta Computer Inc.

PROJECT : JW8B

Size	Document Number	Rev
	Card Reader RTS5179	A
Date: Monday, July 08, 2013	Sheet 33 of 57	

USB3.0 Power Share

USB Power share

USBP0_BUS_SW_CB0	Mode
Low	DCP, Auto-detect
High	CDP, BC Spec 1.2

	R1	mA	
OC limitation	100k ohm	504	
	22.1k ohm	2274	Applied Now

Current limit = 50500/(R1+0.1)

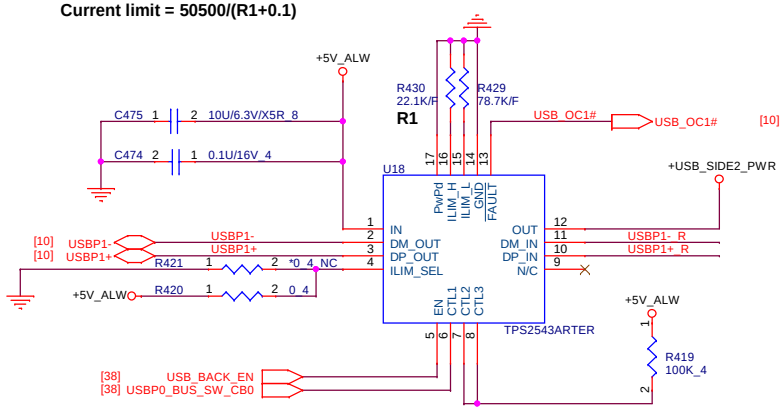

USB3.0/2.0 COMBO X 1

USB 3.0

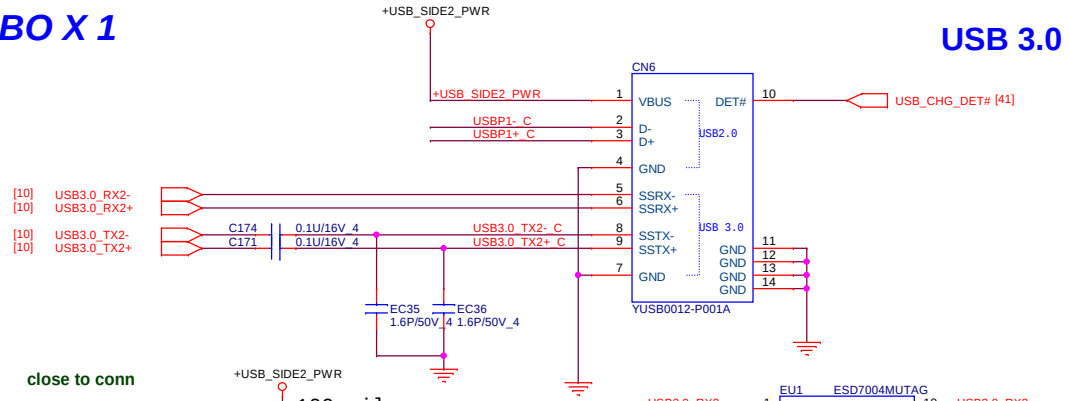

close to conn

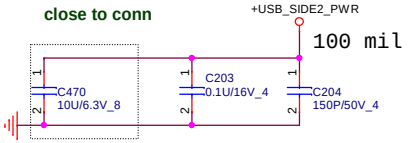

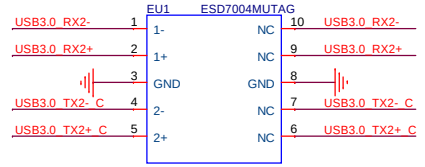

ESD Function

Place ESD diodes as close as USB connector.

USB3.0/2.0 COMBO

I continuous 1.5A
OC 2.0A M13 Request

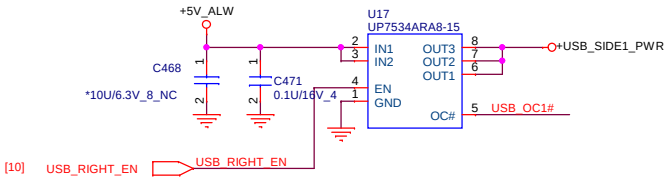

close to conn

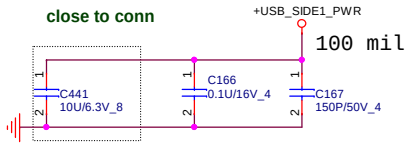

USB 3.0

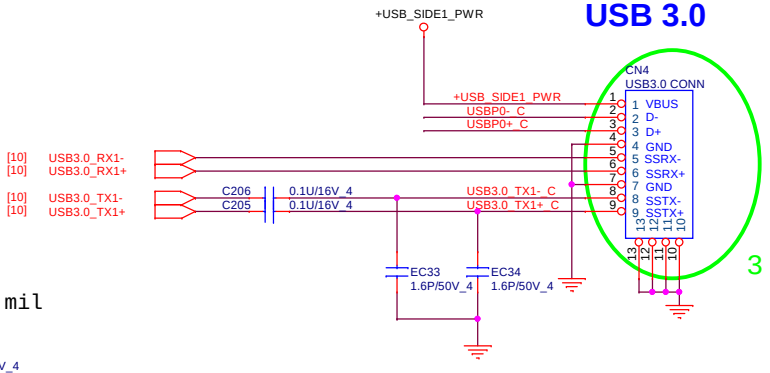

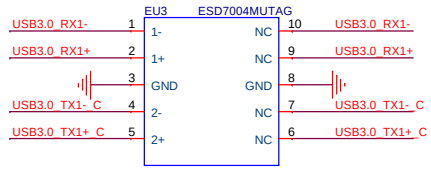

ESD Function

Place ESD diodes as close as USB connector.

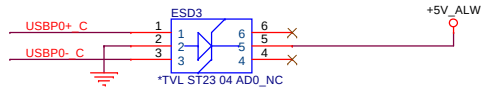

Quanta Computer Inc.

PROJECT : JW8B

Size	Document Number	Rev
	USB3/USB Charger	A

Date: Monday, July 08, 2013 Sheet 34 of 57

I continuous 1.5A
OC 2.0A M13 Request

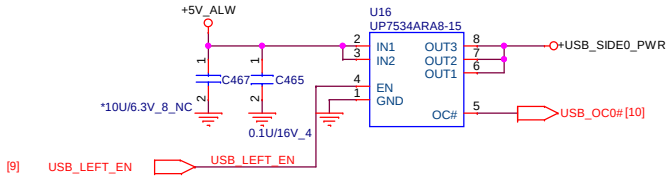

close to conn

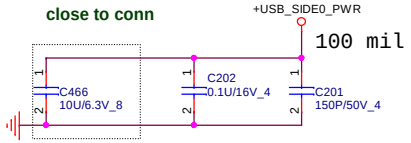

USB 3.0

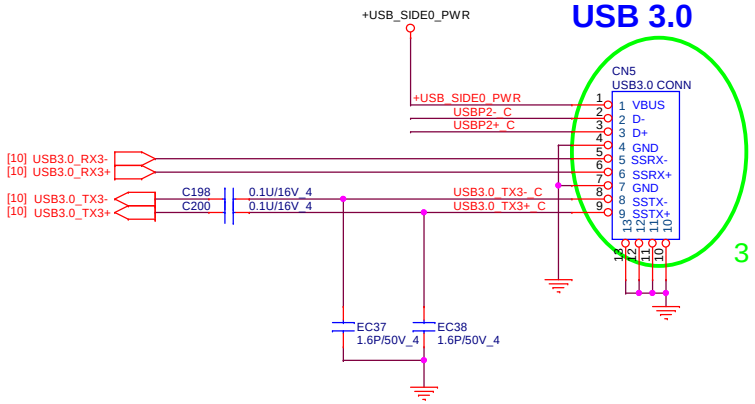

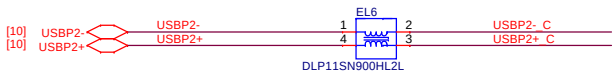

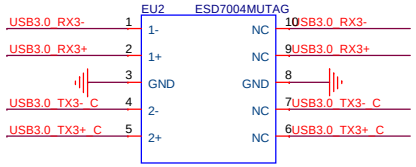

ESD Function

Place ESD diodes as close as USB connector.

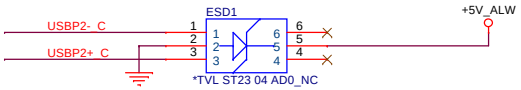

Quanta Computer Inc.		
PROJECT : JW8B		
Size	Document Number: USB3/USB Charger	Rev: A
Date: Monday, July 08, 2013	Sheet 35 of 57	

SATA HDD Connector

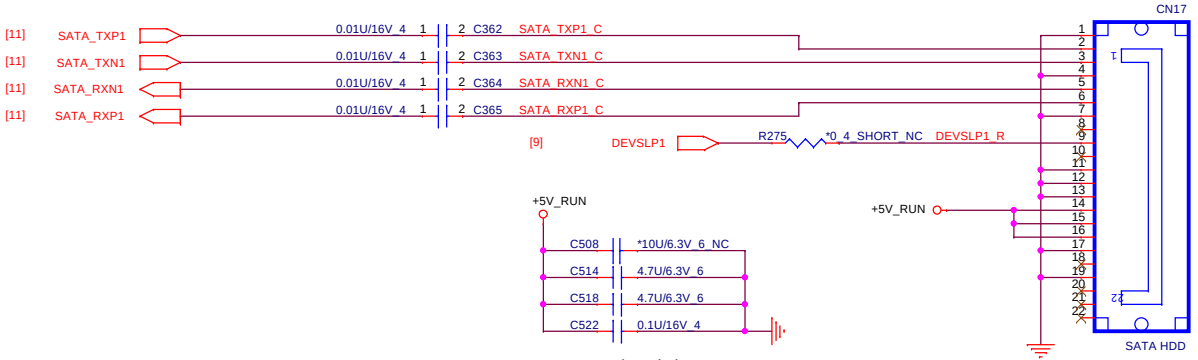

+5V: 2 A(4 Pin)
+3V: 2 A(4 Pin)
Gnd : (5 Pin)

mSATA

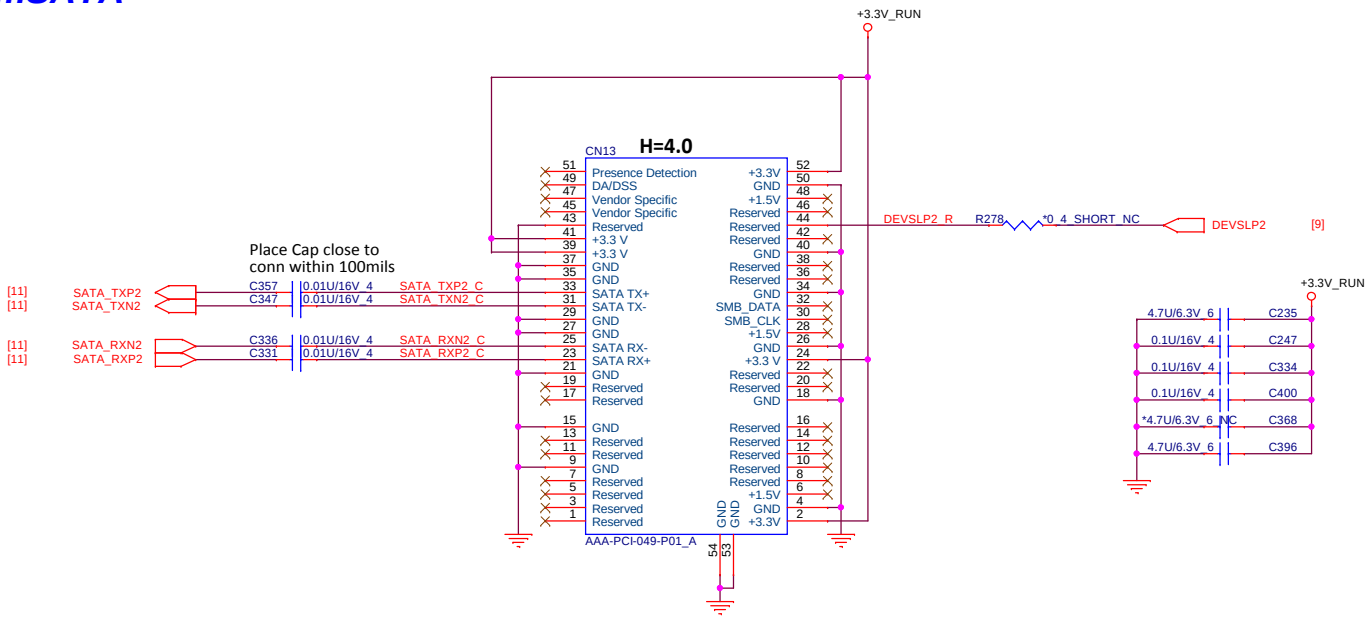

Quanta Computer Inc.		
PROJECT : JW8B		
Size	Document Number: SATA HDD/mSATA/EMI	Rev: A
Date: Monday, July 08, 2013	Sheet 36 of 57	

Mini Card
WLAN/BT(Option)

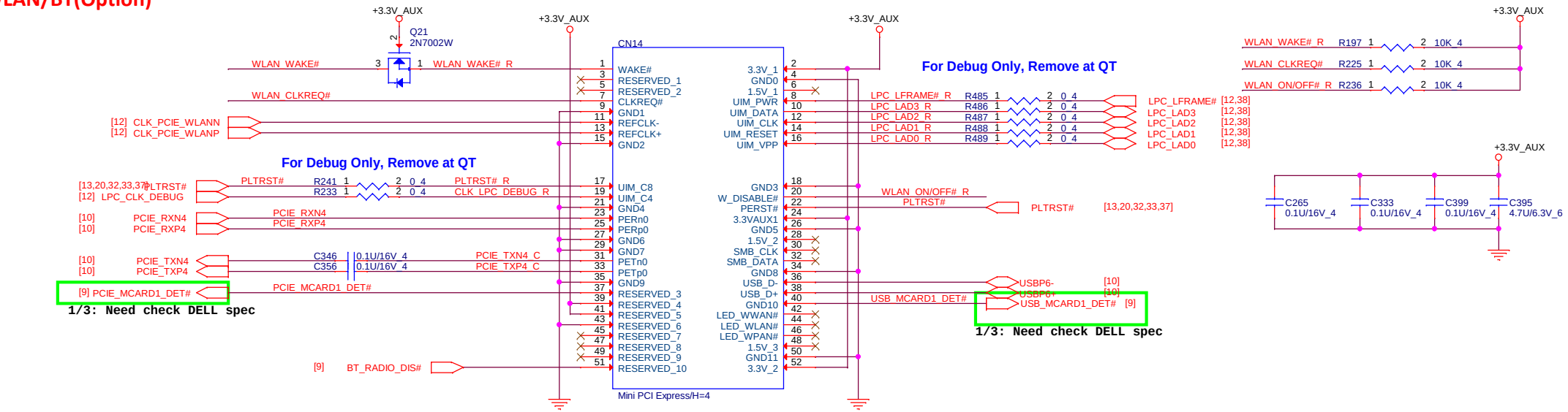

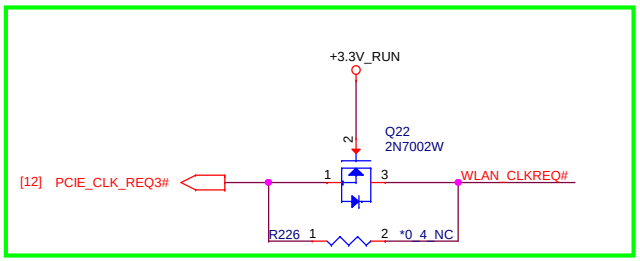

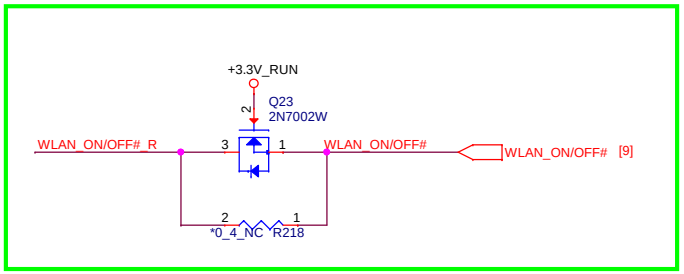

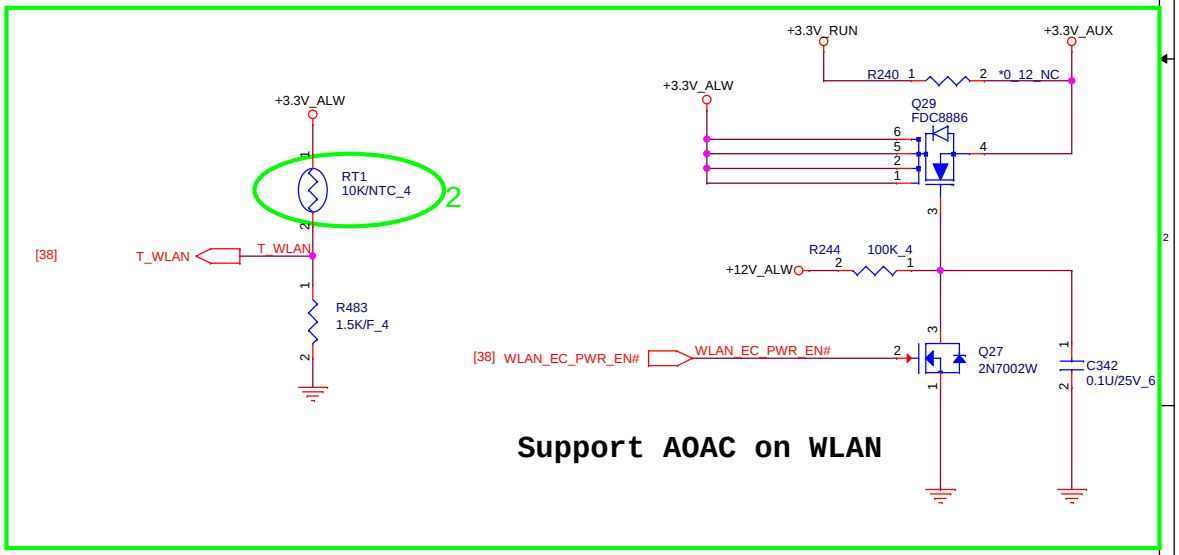

Quanta Computer Inc.		
PROJECT : JW8B		
Size	Document Number	Rev
	WLAN/BT	A
Date: Monday, July 08, 2013	Sheet 37 of 57	

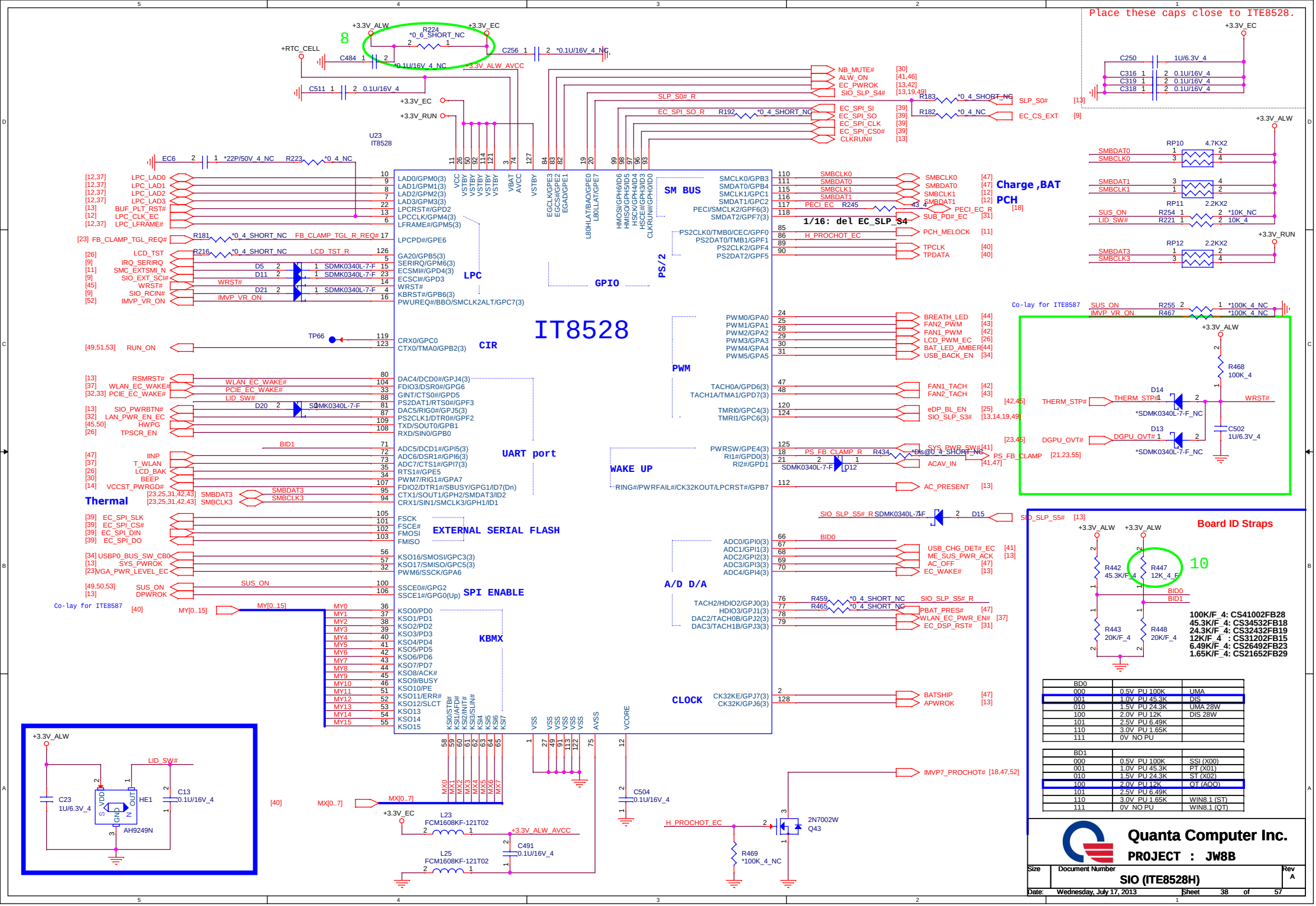

BD0		
000	0.5V PU 100K	UMA
001	1.0V PU 45.3K	DIS
010	1.5V PU 24.3K	UMA 28W
100	2.0V PU 12K	DIS 28W
101	2.5V PU 6.49K	
110	3.0V PU 1.65K	
111	0V NO PU	

BD1		
000	0.5V PU 100K	SSI (X00)
001	1.0V PU 45.3K	PT (X01)
010	1.5V PU 24.3K	ST (X02)
100	2.0V PU 12K	QT (AQO)
101	2.5V PU 6.49K	
110	3.0V PU 1.65K	WIN8.1 (ST)
111	0V NO PU	WIN8.1 (QT)

Quanta Computer Inc.

PROJECT : JW8B

Size	Document Number	Rev
	SIO (ITE8528H)	A

Date: Wednesday, July 17, 2013 Sheet 38 of 57

For EC 16Mbit (2M Byte)

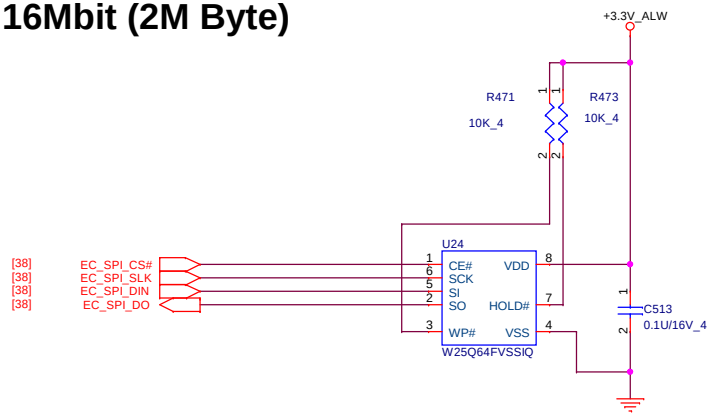

RTC BATTERY

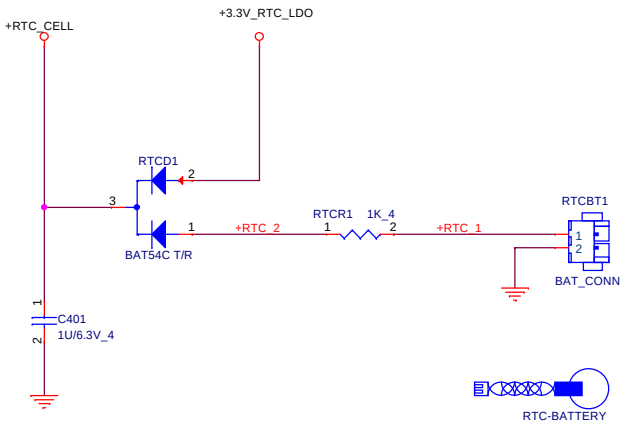

For PCH 64Mbit (8M Byte)

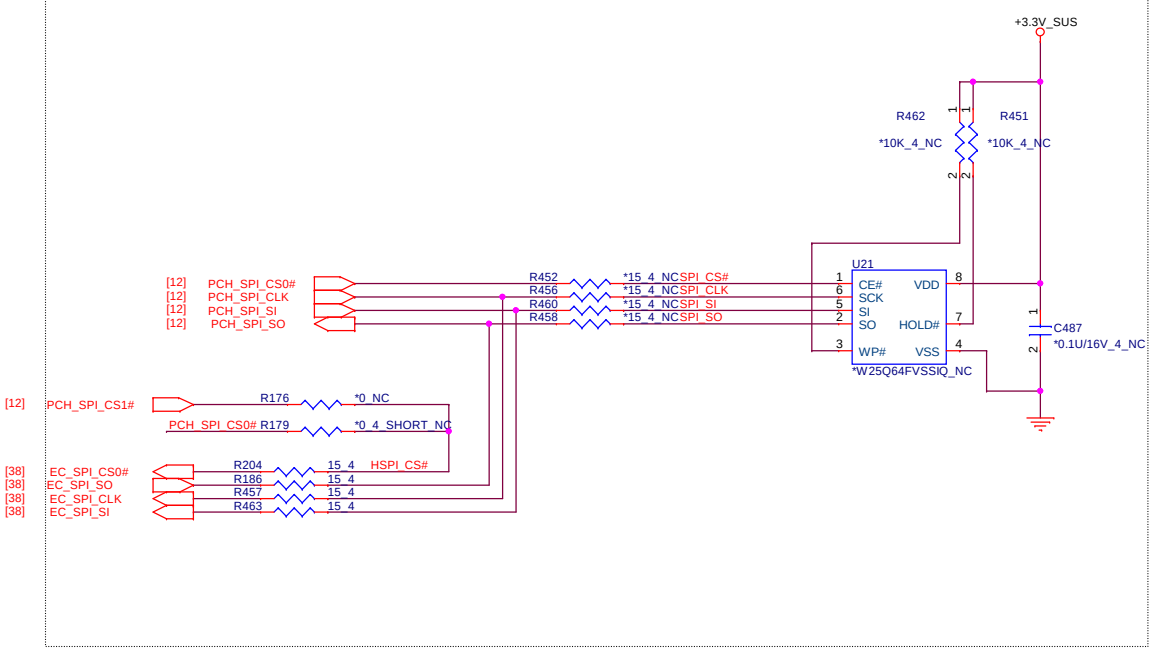

Quanta Computer Inc.

PROJECT : JW8B

Size	Document Number	Rev
	FLASH / RTC	A

Date: Monday, July 08, 2013 Sheet 39 of 57

Keyboard Connector

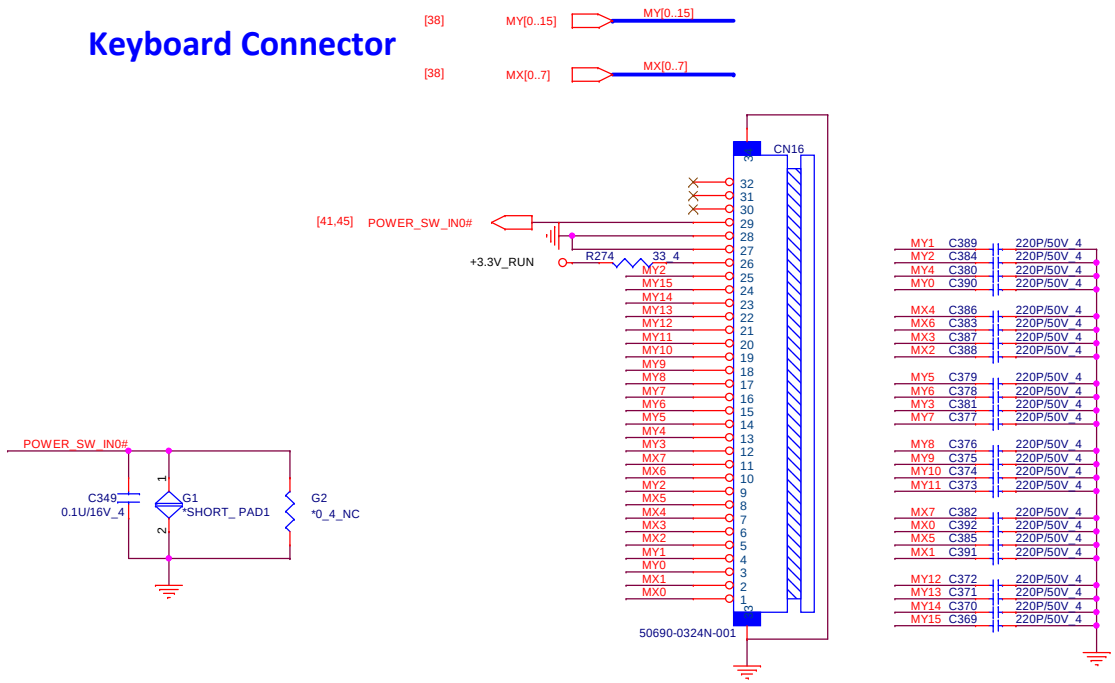

Touch Pad Connector

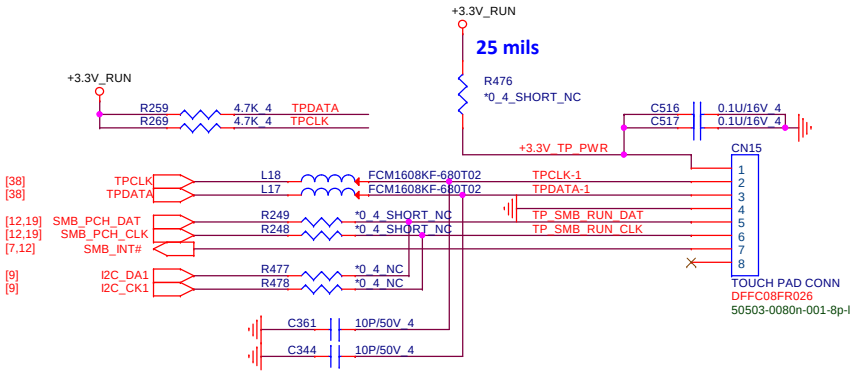

Quanta Computer Inc.

PROJECT : JW8B

Size	Document Number	Rev
	KB/CLK Gen/FAN/TP	A

Date: Monday, July 08, 2013 Sheet 40 of 57

3VALW ON POWER LOGIC

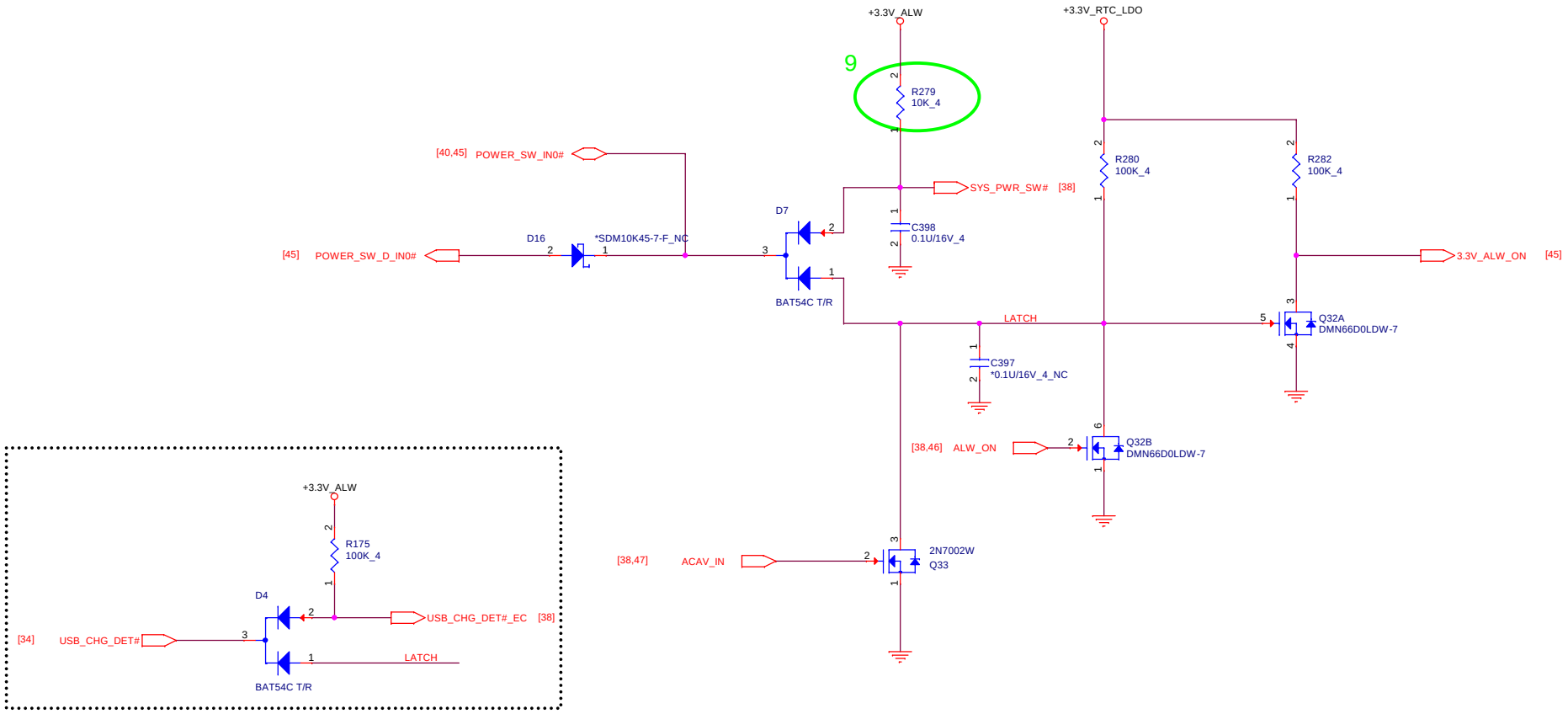

Quanta Computer Inc.		
PROJECT : JW8B		
Size	Document Number: 3VALW ON POWER LOGIC	Rev: A
Date: Wednesday, July 17, 2013	Sheet 41 of 57	

FAN CONN

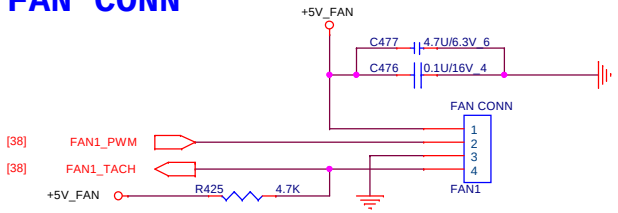

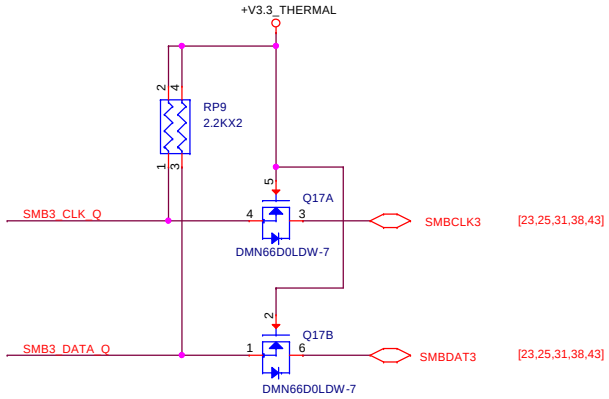

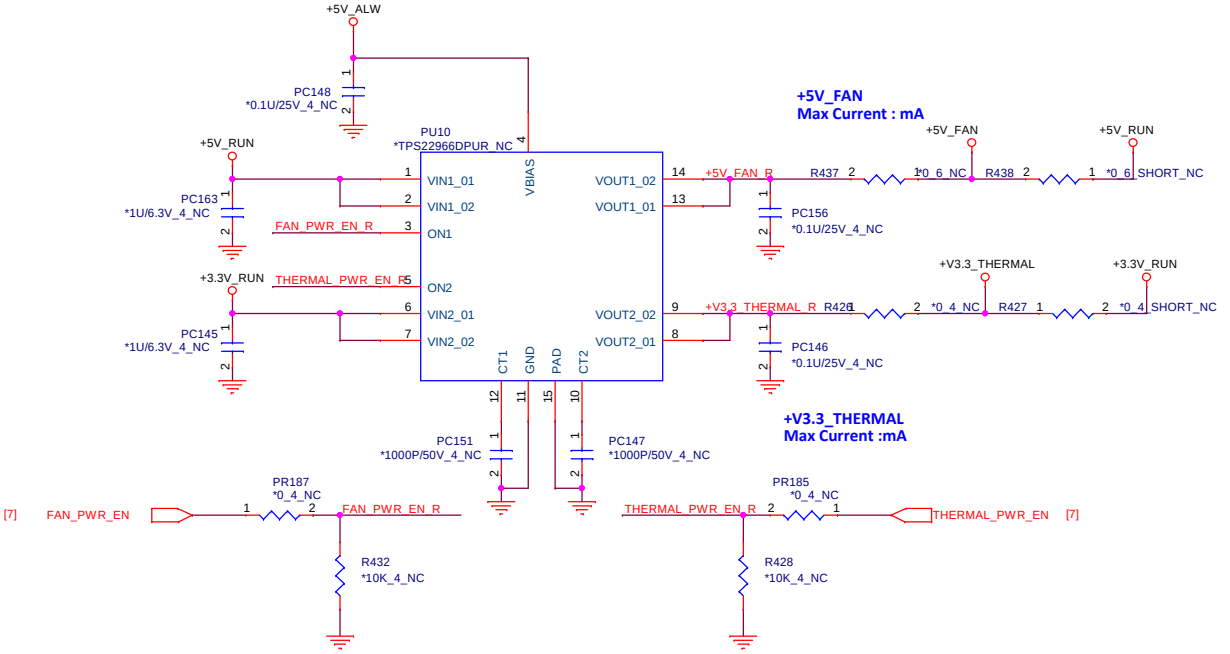

THERMAL IC

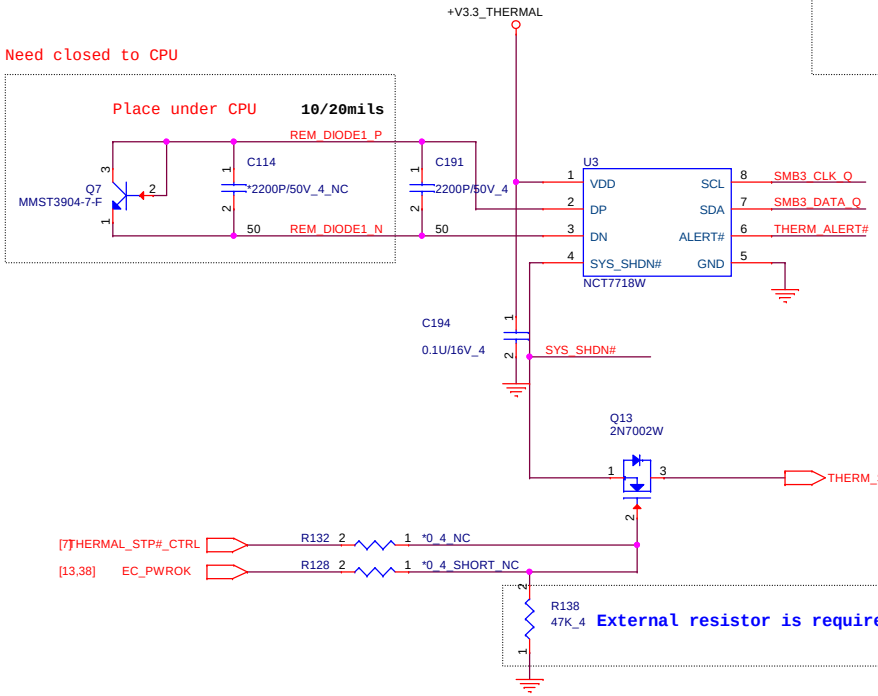

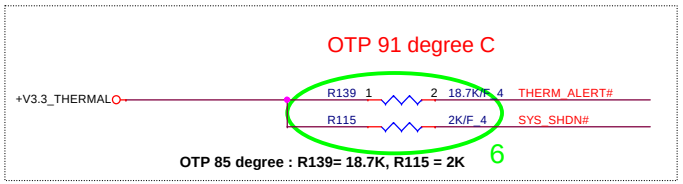

SYS_SHD# / ALERT#	2K	7.5K	10.5K	14K	18.7K
2K	77'C	87'C	97'C	107'C	117'C
7.5K	79'C	89'C	99'C	109'C	119'C
10.5K	81'C	91'C	101'C	111'C	121'C
14K	83'C	93'C	103'C	113'C	123'C
18.7K	85'C	95'C	105'C	115'C	125'C

Quanta Computer Inc.
PROJECT : JW8B

Size	Document Number	Rev
	FAN & THERMAL	A

Date: Wednesday, July 17, 2013 Sheet 42 of 57

For GPU use

G781-1P8
SMBus address is 1001101xb (9Ah) (x is R/W bit).

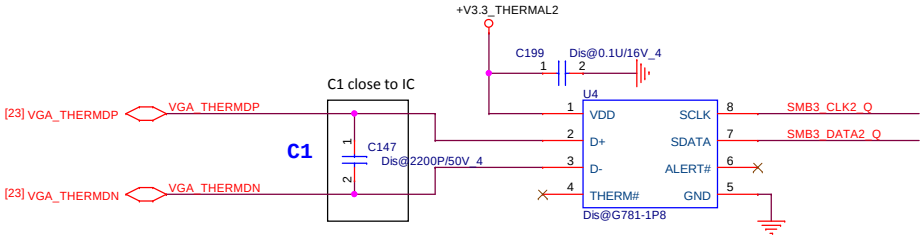

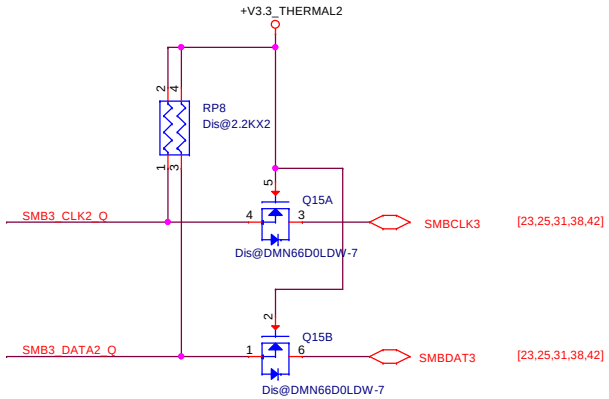

FAN CONN

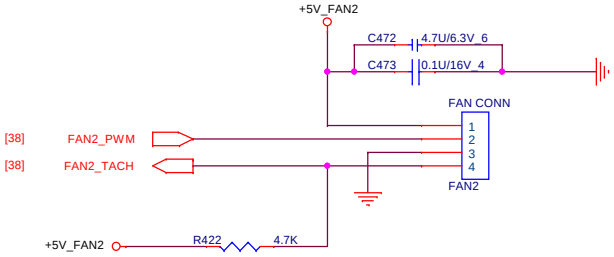

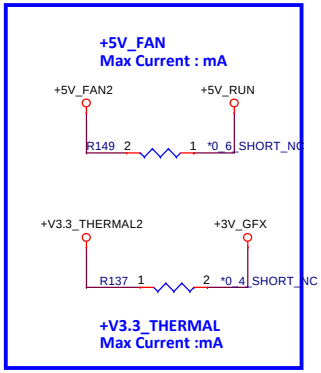

Quanta Computer Inc.
PROJECT : JW8B

Size	Document Number	Rev
	Thermal GPU	A
Date: Monday, July 08, 2013	Sheet 43 of 57	

LED Status

System status LED

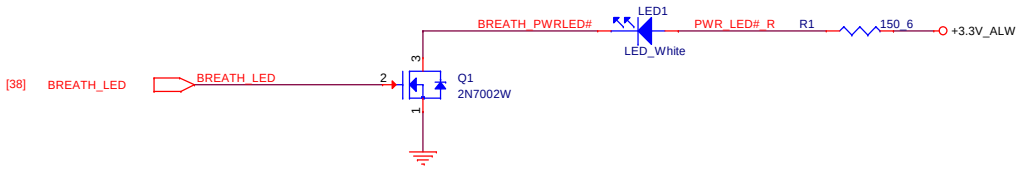

Battrey charger LED

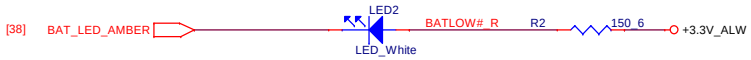

HDD access LED

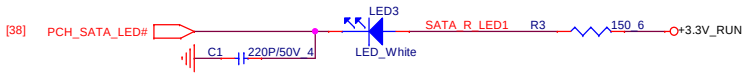

Quanta Computer Inc.		
PROJECT : JW8B		
Size	Document Number: LED	Rev: A
Date: Friday, May 10, 2013	Sheet 44 of 57	

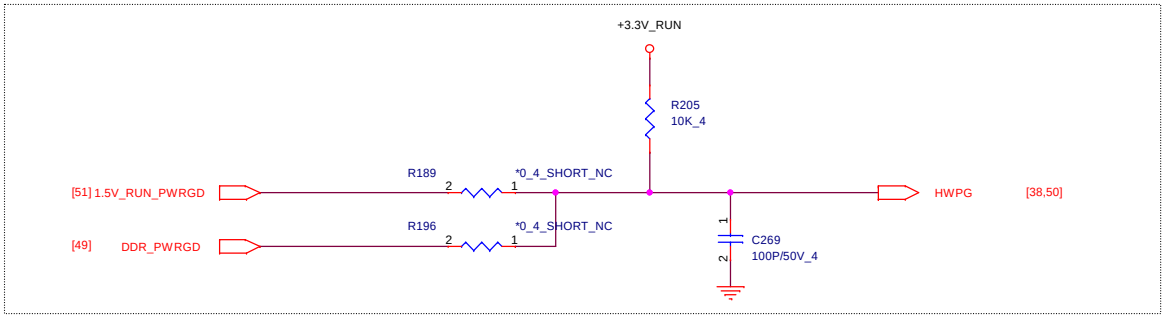

HW reset IC

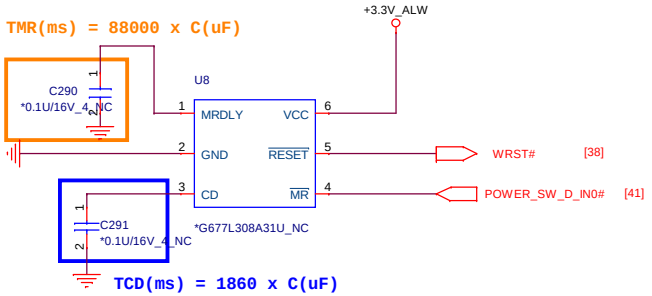

Quanta Computer Inc.

PROJECT : JW8B

Size	Document Number	Rev
	System Reset Circuit	A

Date: Monday, July 08, 2013 Sheet 45 of 57

DC/DC +3V_ALW/+5V_ALW/+5V_ALW2 /+15V_ALW

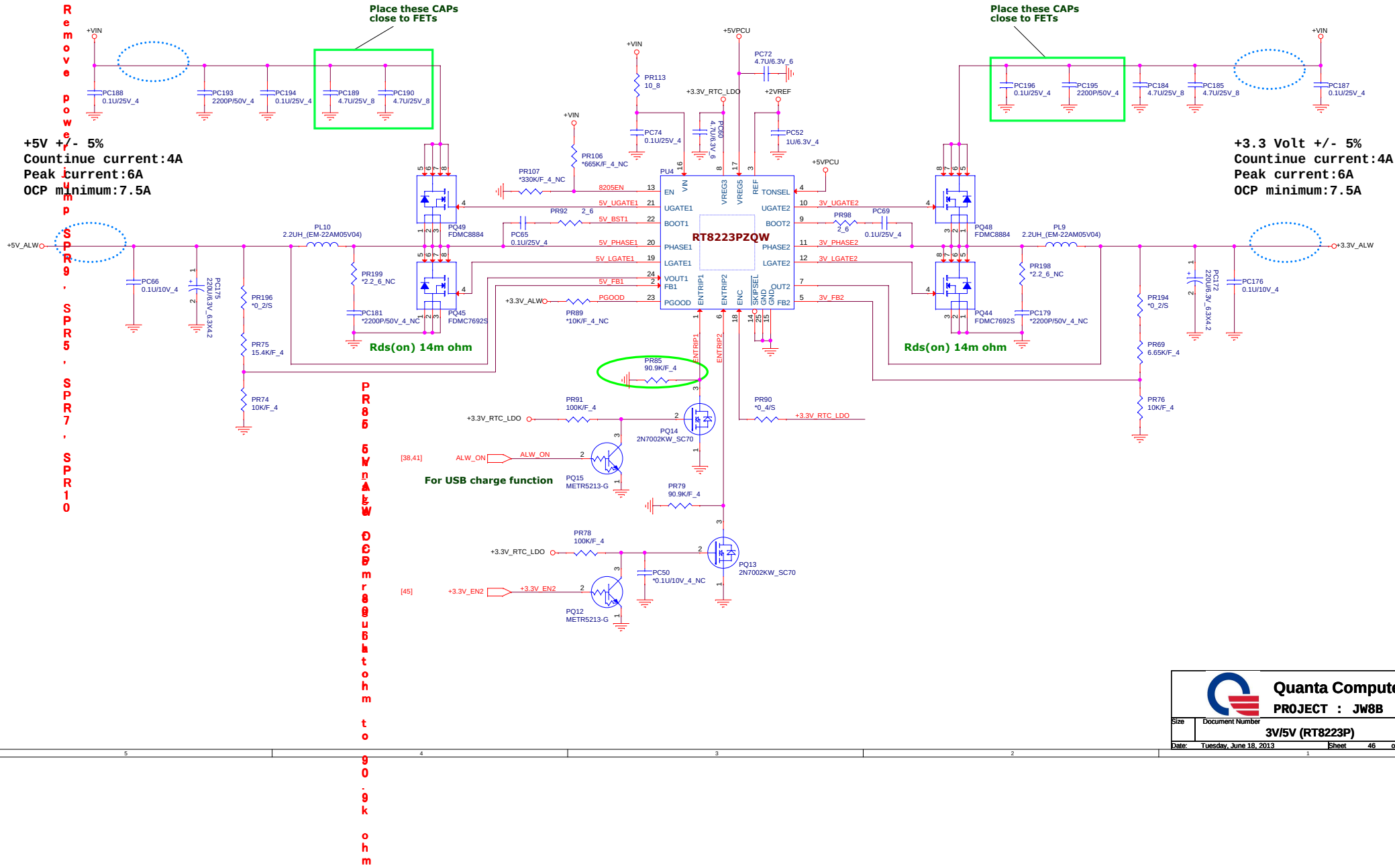

Quanta Computer Inc.			
PROJECT : JW8B			
Size	Document Number		Rev
	3V/5V (RT8223P)		1A
Date: Tuesday, June 18, 2013	Sheet 46 of 57		

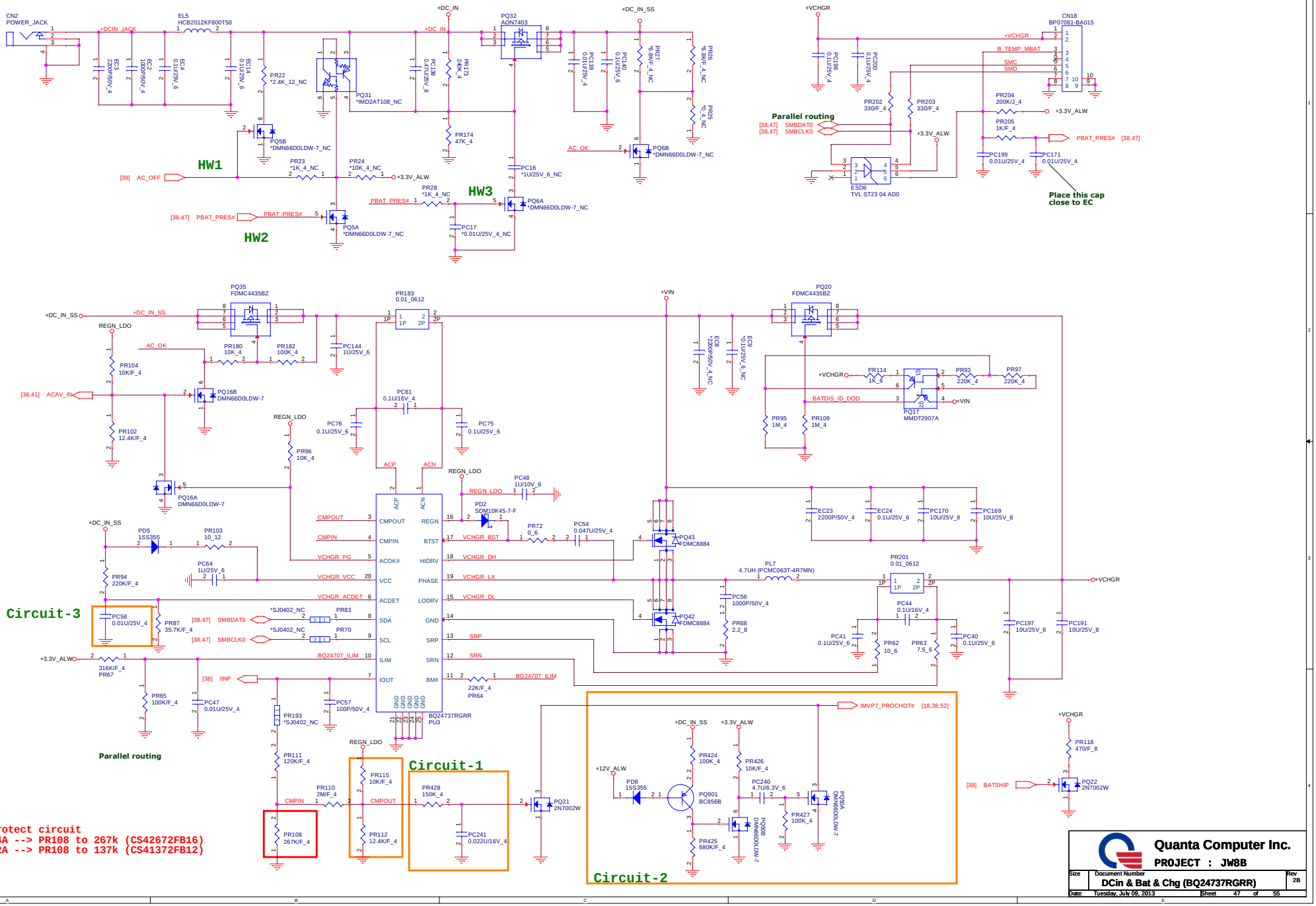
CN2
POWER_JACK
+DCIN_JACK
EL5
HCB2012KF800T50
+DC_IN
PQ32
AON7403
+DC_IN_SS
PR22
*2.4K_12_NC
PQ31
*IMD2AT108_NC
PR173
240K_4
PR174
47K_4
PC16
*1U/25V_6_NC
PQ5B
*DMN66D0LDW-7_NC
PQ6B
*DMN66D0LDW-7_NC
HW1
HW2
HW3
[38] AC_OFF
PR23
*1K_4_NC
PR24
*10K_4_NC
+3.3V_ALW
[38,47] PBAT_PRES#
PQ5A
*DMN66D0LDW-7_NC
PR28
*1K_4_NC
PQ6A
*DMN66D0LDW-7_NC
PC17
*0.01U/25V_4_NC
+VCHGR
CN18
BP07061-BA015
B_TEMP_MBAT
SMC
SMD
Parallel routing
[38,47] SMBDAT0
[38,47] SMBCLK0
PR202
330/F_4
PR203
330/F_4
PR204
200K/J_4
PR205
1K/F_4
PC199
0.01U/25V_4
PC171
0.01U/25V_4
ESD6
TVL ST23 04 AD0
Place this cap close to EC
PQ35
FDMC4435BZ
PR183
0.01_0612
REGN_LDO
AC_OK
PR180
10K_4
PR182
100K_4
PC144
1U/25V_6
[38,41] ACAV_IN
PR104
10K/F_4
PR102
12.4K/F_4
PQ16B
DMN66D0LDW-7
PQ16A
DMN66D0LDW-7
PC61
0.1U/16V_4
PC76
0.1U/25V_6
PC75
0.1U/25V_6
PR96
10K_4
ACP
ACN
PC48
1U/10V_6
PD2
SDM10K45-7-F
PR72
0_6
PC54
0.047U/25V_4
+VIN
PQ20
FDMC4435BZ
EC8
*2200P/50V_4_NC
EC9
*0.1U/25V_6_NC
PR114
1K_6
PR93
220K_4
PR97
220K_4
PQ17
MMDT2907A
BATDIS_ID_DOD
PR95
1M_4
PR109
1M_4
EC23
2200P/50V_4
EC24
0.1U/25V_6
PC170
10U/25V_8
PC169
10U/25V_8
PQ43
FDMC8884
PQ42
FDMC8884
PL7
4.7UH (PCMC063T-4R7MN)
PC56
1000P/50V_4
PR68
2.2_8
PR201
0.01_0612
PC44
0.1U/16V_4
PC41
0.1U/25V_6
PR62
10_6
PR63
7.5_6
PC40
0.1U/25V_6
PC197
10U/25V_8
PC191
10U/25V_8
PD5
1SS355
PR103
10_12
PC64
1U/25V_6
PR94
220K/F_4
Circuit-3
PC58
0.01U/25V_4
PR87
35.7K/F_4
*SJ0402_NC
PR83
PR70
[38,47] SMBDAT0
[38,47] SMBCLK0
CMPOUT
CMPIN
VCHGR_PG
VCHGR_VCC
VCHGR_ACDET
VCHGR_BST
VCHGR_DH
VCHGR_LX
VCHGR_DL
SRP
SRN
BQ24707_ILIM
IINP
BQ24737RGRR
PU3
316K/F_4
PR67
PR65
100K/F_4
PC47
0.01U/25V_4
PR193
*SJ0402_NC
PC57
100P/50V_4
22K/F_4
PR64
Parallel routing
PR111
120K/F_4
PR110
2M/F_4
PR108
267K/F_4
PR115
10K/F_4
PR112
12.4K/F_4
Circuit-1
PR428
150K_4
PC241
0.022U/16V_4
PQ21
2N7002W
Circuit-2
IMVP7_PROCHOT# [18,38,52]
+12V_ALW
PD8
1SS355
PQ901
BC856B
PR424
100K_4
PR426
10K/F_4
PC240
4.7U/6.3V_6
PR425
680K/F_4
PR427
100K_4
PQ29B
DMN66D0LDW-7
PQ29A
DMN66D0LDW-7
PR118
470/F_8
[38] BATSHIP
PQ22
2N7002W
Adaptor protect circuit
65W - 4.34A --> PR108 to 267k (CS42672FB16)
90W - 5.62A --> PR108 to 137k (CS41372FB12)
Quanta Computer Inc.
PROJECT : JW8B
Size
Document Number
DCin & Bat & Chg (BQ24737RGRR)
Rev
2B
Date: Tuesday, July 09, 2013
Sheet 47 of 55

Quanta Computer Inc.

PROJECT : JW8B

Size	Document Number	Rev
	NC	A

Date: Tuesday, June 18, 2013 Sheet 48 of 57

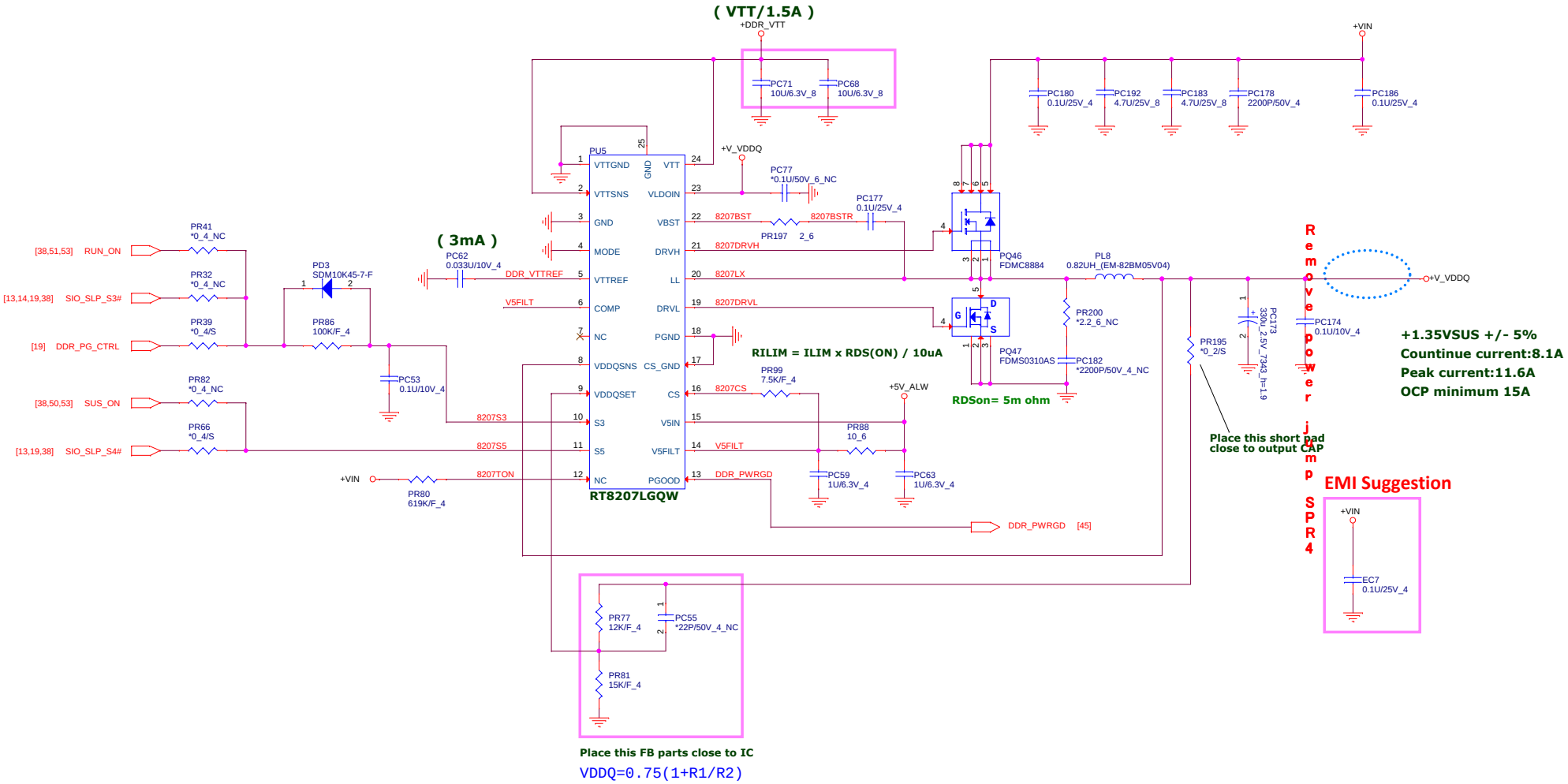

Quanta Computer Inc.			
PROJECT : JW8B			
Size	Document Number		Rev
	DDR3L VDDQ(RT8207LGQW)		1A
Date: Tuesday, July 09, 2013		Sheet 49 of 55	

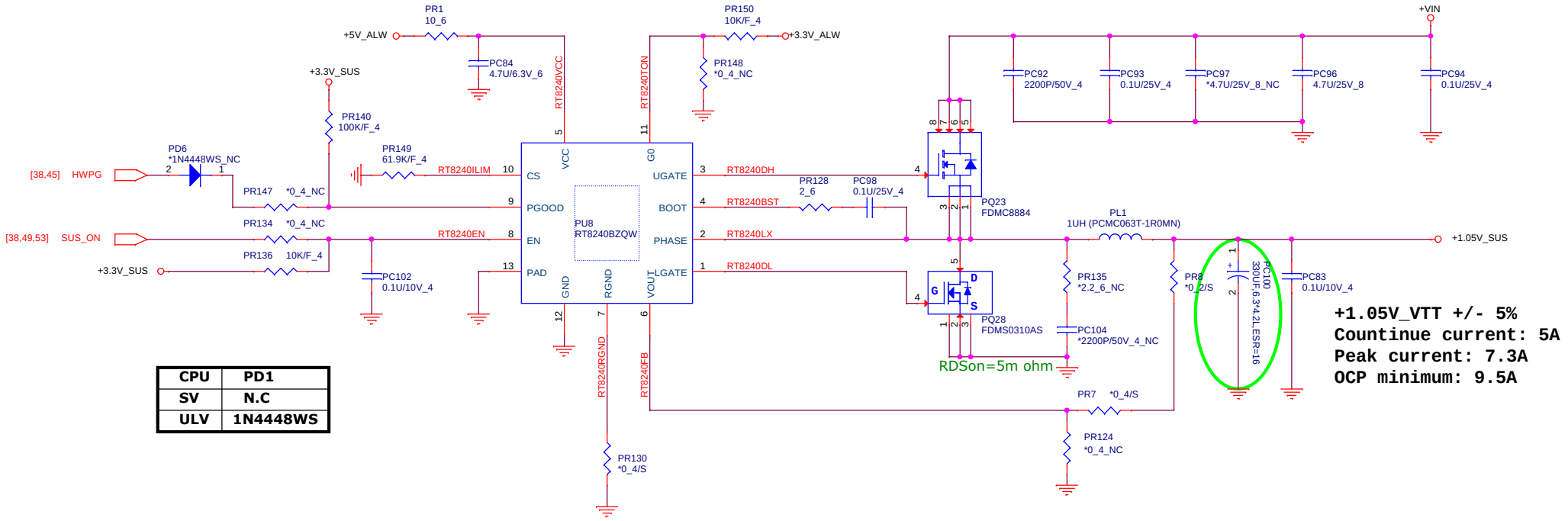

CPU	PD1
SV	N.C
ULV	1N4448WS

+1.05V_VTT +/- 5%
Countinue current: 5A
Peak current: 7.3A
OCP minimum: 9.5A

Quanta Computer Inc.
PROJECT : JW8B

Size	Document Number	Rev
	+1.05V_SUS (RT8240BZQW)	1A
Date: Tuesday, July 09, 2013	Sheet 50 of 55	

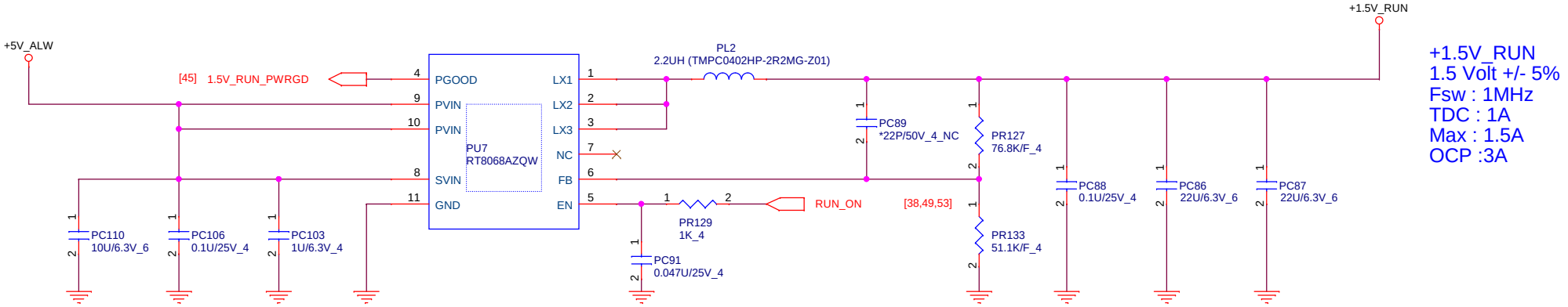

+1.5V_RUN
1.5 Volt +/- 5%
Fsw : 1MHz
TDC : 1A
Max : 1.5A
OCP :3A

Quanta Computer Inc.

PROJECT : JW8B

Size	Document Number	Rev
	+1.5V_RUN (RT8068AZQW)	1A
Date: Tuesday, July 09, 2013	Sheet 51 of 57	

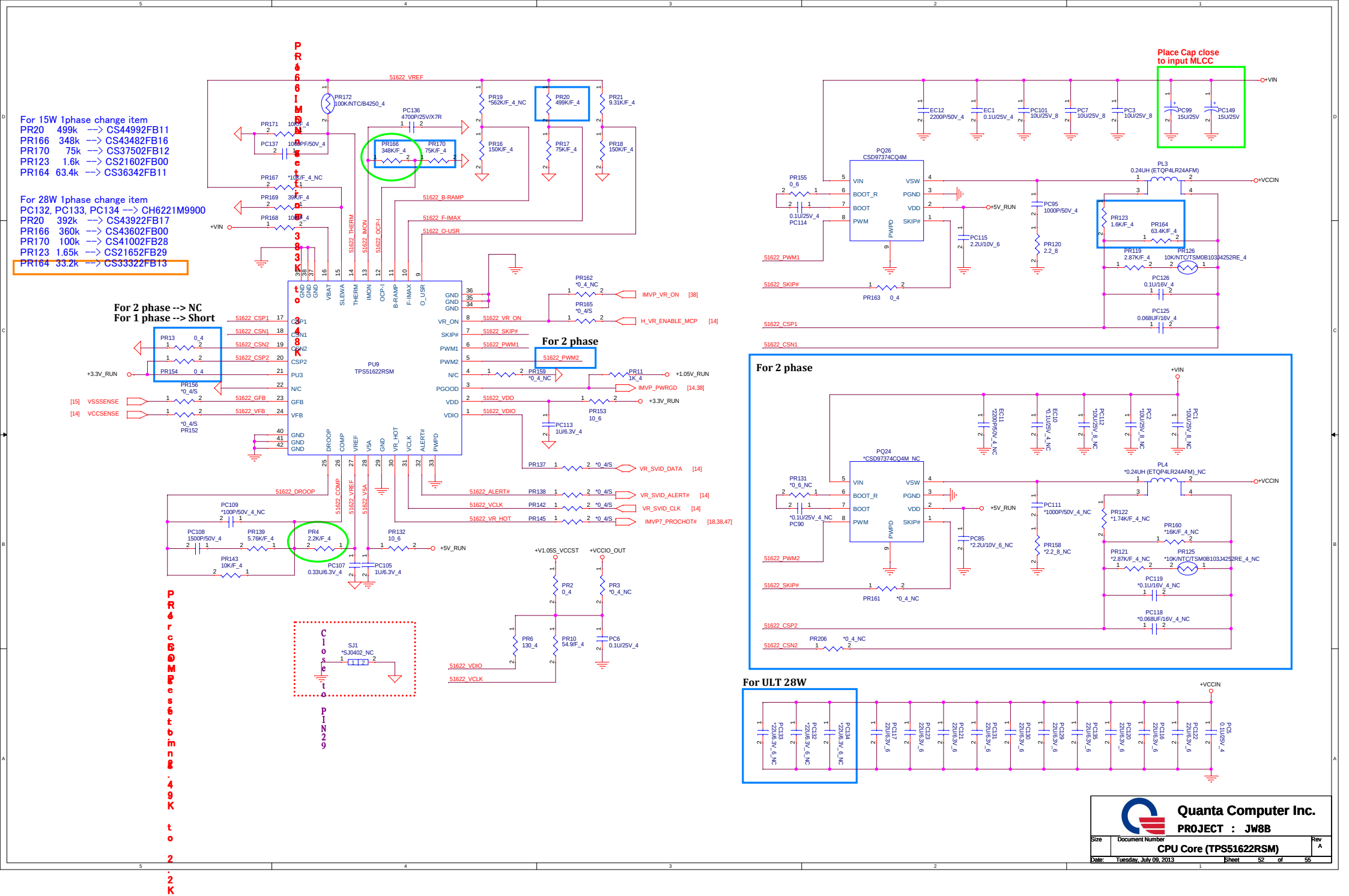
For 15W 1phase change item
PR20 499k --> CS44992FB11
PR166 348k --> CS43482FB16
PR170 75k --> CS37502FB12
PR123 1.6k --> CS21602FB00
PR164 63.4k --> CS36342FB11
For 28W 1phase change item
PC132, PC133, PC134 --> CH6221M9900
PR20 392k --> CS43922FB17
PR166 360k --> CS43602FB00
PR170 100k --> CS41002FB28
PR123 1.65k --> CS21652FB29
PR164 33.2k --> CS33322FB13
For 2 phase --> NC
For 1 phase --> Short
For 2 phase
For 2 phase
For ULT 28W
Place Cap close to input MLCC
PU9
TPS51622RSM
PQ26
CSD97374CQ4M
PQ24
*CSD97374CQ4M_NC
PL3
0.24UH (ETQP4LR24AFM)
PL4
*0.24UH (ETQP4LR24AFM)_NC
+VIN
+VCCIN
+5V_RUN
+3.3V_RUN
+1.05V_RUN
+V1.05S_VCCST
+VCCIO_OUT
51622_VREF
51622_B-RAMP
51622_F-IMAX
51622_O-USR
51622_THERM
51622_IMON
51622_OCP-I
51622_VR_ON
51622_SKIP#
51622_PWM1
51622_PWM2
51622_CSP1
51622_CSN1
51622_CSN2
51622_CSP2
51622_GFB
51622_VFB
51622_DROOP
51622_COMP
51622_VREF
51622_V5A
51622_VDO
51622_VDIO
51622_VCLK
51622_VR_HOT
51622_ALERT#
IMVP_VR_ON [38]
H_VR_ENABLE_MCP [14]
IMVP_PWRGD [14,38]
VR_SVID_DATA [14]
VR_SVID_ALERT# [14]
VR_SVID_CLK [14]
IMVP7_PROCHOT# [18,38,47]
[15] VSSSENSE
[14] VCCSENSE
Close to PIN29
SJ1
*SJ0402_NC
Quanta Computer Inc.
PROJECT : JW8B
Size
Document Number
CPU Core (TPS51622RSM)
Rev
A
Date: Tuesday, July 09, 2013
Sheet 52 of 55

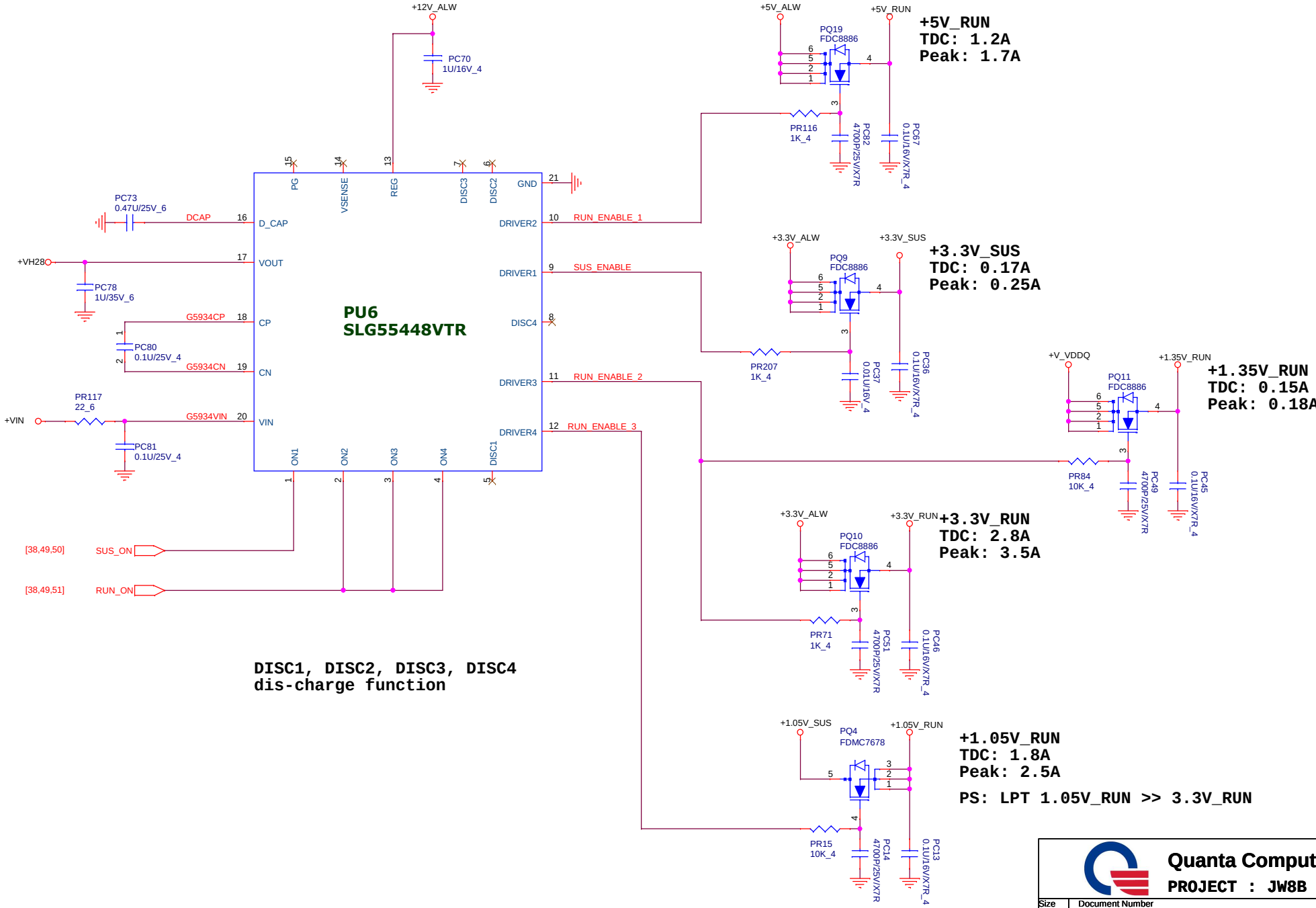

Quanta Computer Inc.

PROJECT : JW8B

Size	Document Number	Rev
	SUS_RUN Power Switch	1A
Date: Tuesday, July 09, 2013	Sheet 53 of 57	

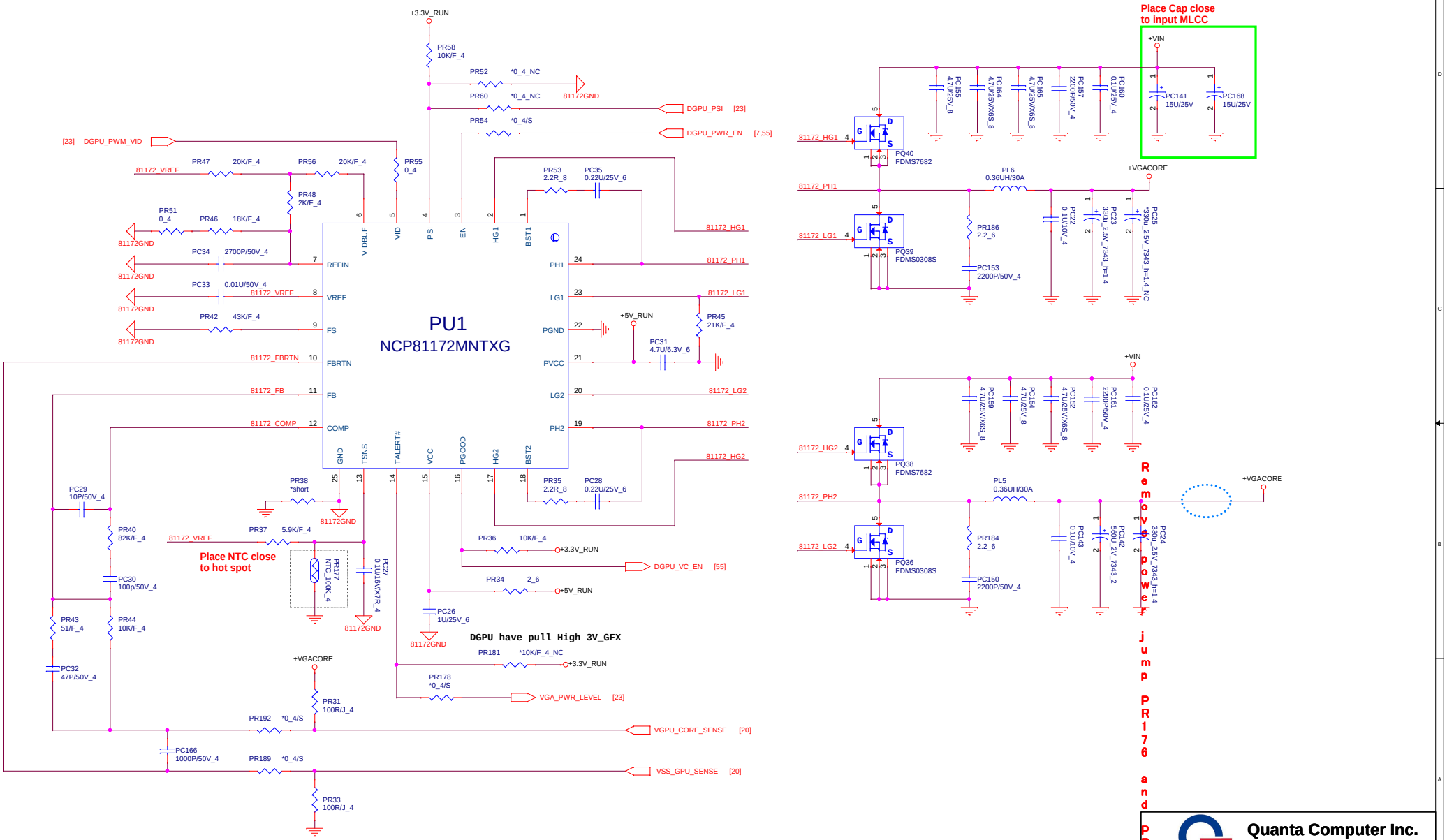
+3.3V_RUN
PR58 10K/F_4
PR52 *0_4_NC
PR60 *0_4_NC
81172GND
PR54 *0_4/S
DGPU_PSI [23]
DGPU_PWR_EN [7,55]
[23] DGPU_PWM_VID
PR47 20K/F_4
PR56 20K/F_4
PR55 0_4
81172_VREF
PR48 2K/F_4
PR51 0_4
PR46 18K/F_4
PC34 2700P/50V_4
PC33 0.01U/50V_4
PR42 43K/F_4
PR53 2.2R_8
PC35 0.22U/25V_6
81172_HG1
81172_PH1
81172_LG1
PR45 21K/F_4
PC31 4.7U/6.3V_6
+5V_RUN
81172_FBRTN
81172_FB
81172_COMP
81172_LG2
81172_PH2
81172_HG2
PU1
NCP81172MNTXG
VIDBUF
VID
PSI
EN
HG1
BST1
REFIN
VREF
FS
FBRTN
FB
COMP
PH1
LG1
PGND
PVCC
LG2
PH2
GND
TSNS
TALERT#
VCC
PGOOD
HG2
BST2
PC29 10P/50V_4
PR38 *short
PR40 82K/F_4
PR37 5.9K/F_4
PC30 100p/50V_4
PR43 51/F_4
PR44 10K/F_4
PC32 47P/50V_4
PR177 NTC_100K_4
PC27 0.1U/16V/X7R_4
Place NTC close to hot spot
PR36 10K/F_4
+3.3V_RUN
DGPU_VC_EN [55]
PR34 2_6
+5V_RUN
PC26 1U/25V_6
DGPU have pull High 3V_GFX
PR181 *10K/F_4_NC
PR178 *0_4/S
VGA_PWR_LEVEL [23]
+VGACORE
PR31 100R/J_4
PR192 *0_4/S
VGPU_CORE_SENSE [20]
PC166 1000P/50V_4
PR189 *0_4/S
VSS_GPU_SENSE [20]
PR33 100R/J_4
Place Cap close to input MLCC
+VIN
PC155 4.7U/25V_8
PC154 4.7U/25V/X6S_8
PC165 4.7U/25V/X6S_8
PC157 2200P/50V_4
PC160 0.1U/25V_4
PC141 15U/25V
PC168 15U/25V
PQ40 FDMS7682
PL6 0.36UH/30A
PR186 2.2_6
PC153 2200P/50V_4
PC22 0.1U/10V_4
PC23 330u_2.5V_7343_h=1.4
PC25 *330u_2.5V_7343_h=1.4_NC
PQ39 FDMS0308S
PC159 4.7U/25V/X6S_8
PC158 4.7U/25V_8
PC152 4.7U/25V/X6S_8
PC161 2200P/50V_4
PC162 0.1U/25V_4
PQ38 FDMS7682
PL5 0.36UH/30A
PR184 2.2_6
PC150 2200P/50V_4
PC143 0.1U/10V_4
PC142 560U_2V_7343_2
PC24 330u_2.5V_7343_h=1.4
PQ36 FDMS0308S
Remove power jump PR176 and PR30
Quanta Computer Inc.
PROJECT : JW8B
Size
Document Number
+VGA CORE (NCP3218G)
Rev 3A
Date: Tuesday, July 09, 2013
Sheet 54 of 55

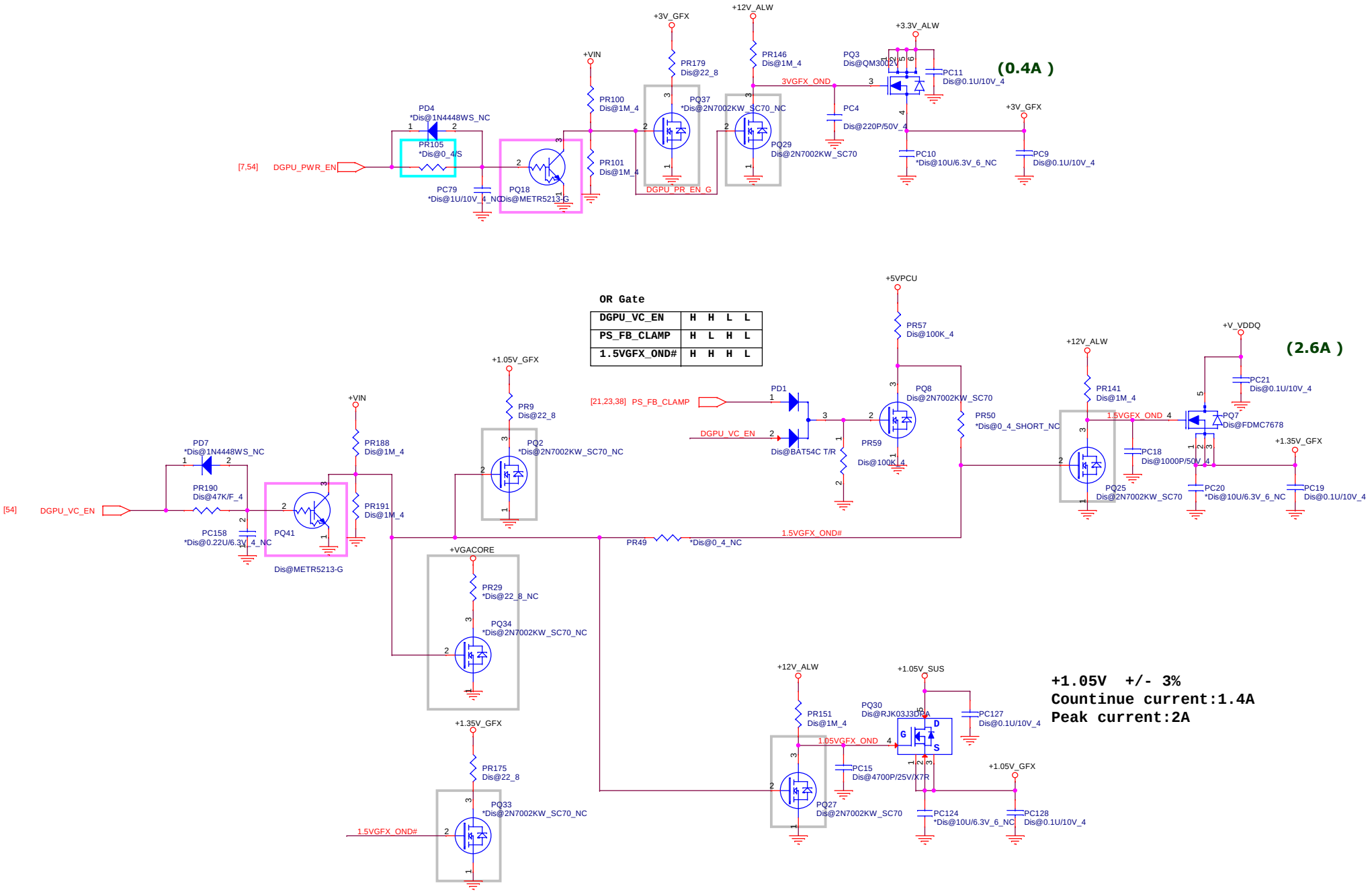

Quanta Computer Inc.	
PROJECT : JW8B	
Size	Document Number: +VGA POWER — Rev: 3A
Date: Tuesday, July 09, 2013	Sheet 55 of 57