PAGE	DESCRIPTION	NOTE
1	P01_Title	
2	P02_PMU&UART&JTAG	
3	P03_BANK IO	
4	P04_DVP	
5	P05_LED&KEY&BUZZER	
6	P06_HDMI	
7	P07_TF	
8	P08_EEPROM&RTC	
9	P09_Connect	
10	P10	
11	P11	
12	P12	
13	P13	
14	P14	
15	P15	
16	P16	
17	P17	
18	P18	
19	P19	
20	P20	
21	P21	
22	P22	

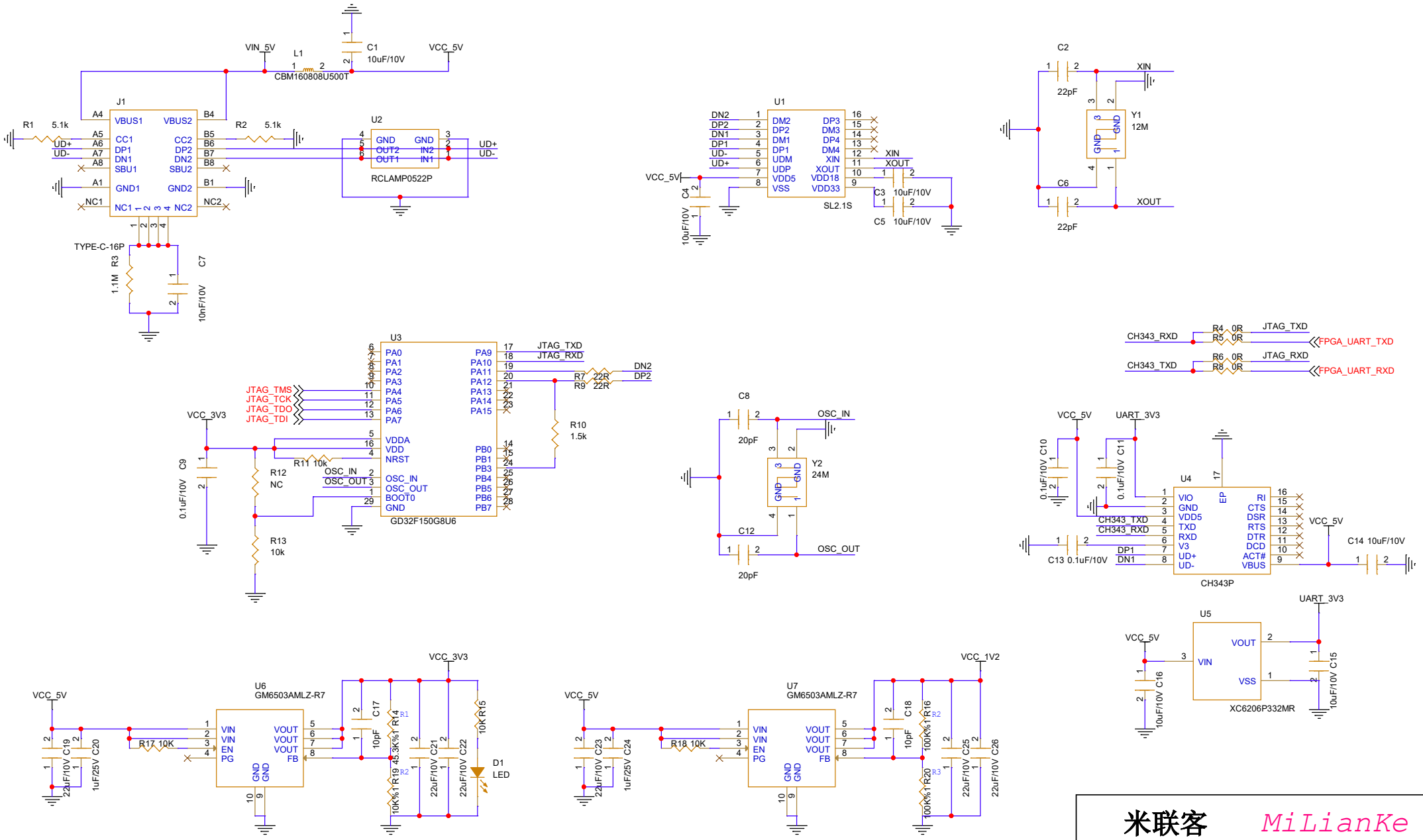

米联客 MiLianKe

www.uisrc.com

MLKPAI-FMin01

ProjectName: <Doc>			
Size: B	Page Title: P02 PMU&UART&JTAG	Rev:	<RevCode>
Date: Thursday, July 17, 2025		Sheet 2 of 9	

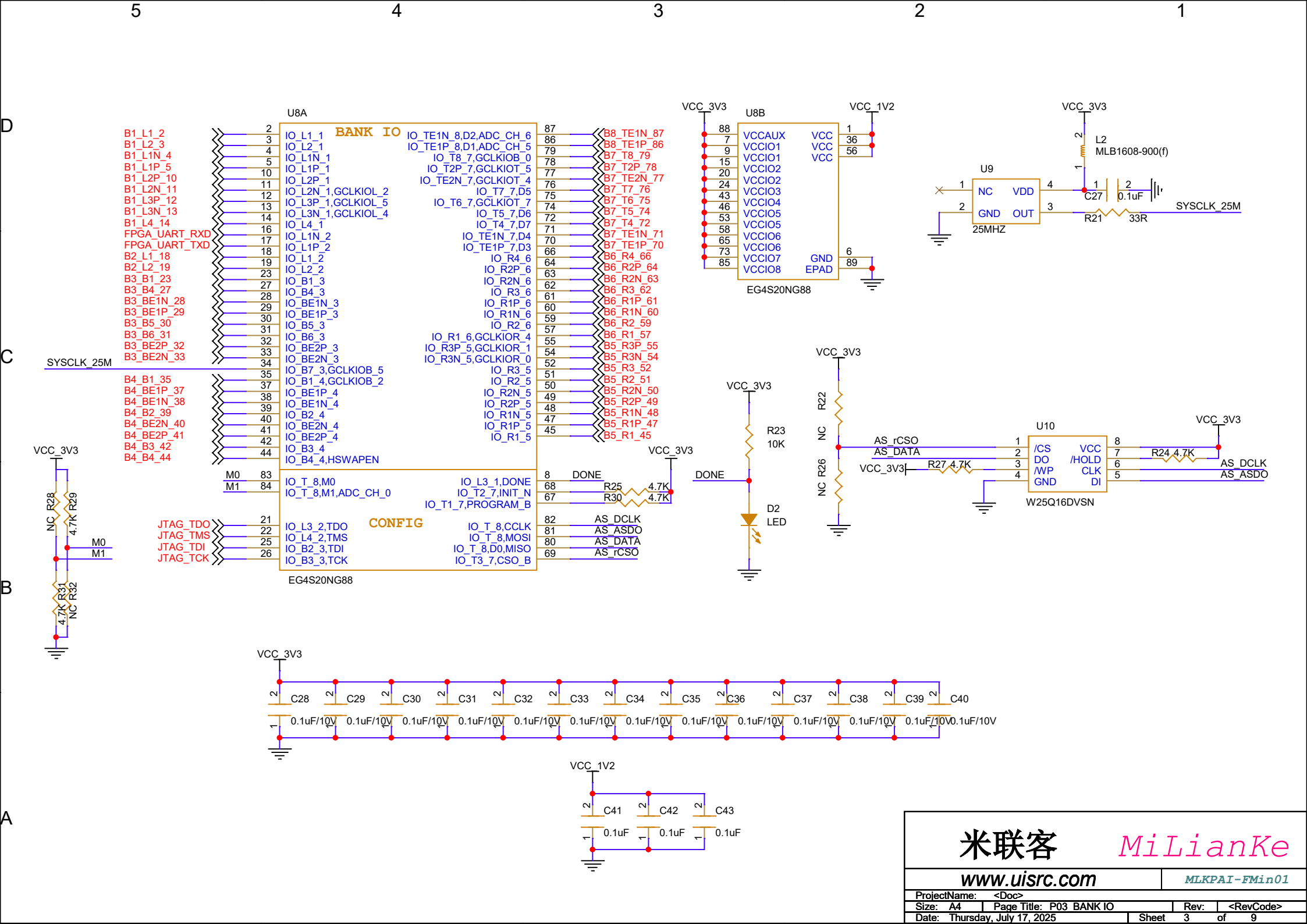
U8A
BANK IO
CONFIG
EG4S20NG88
U8B
VCCAUX
VCCIO1
VCCIO2
VCCIO3
VCCIO4
VCCIO5
VCCIO6
VCCIO7
VCCIO8
VCC
GND
EPAD
VCC_3V3
VCC_1V2
U9
NC
VDD
GND
OUT
25MHZ
L2
MLB1608-900(f)
C27
0.1uF
R21
33R
SYSCLK_25M
U10
/CS
DO
/WP
GND
/HOLD
CLK
DI
W25Q16DVSN
R24 4.7K
R27 4.7K
AS_rCSO
AS_DATA
AS_DCLK
AS_ASDO
R22
R26
R23
10K
D2
LED
DONE
R25
R30
4.7K
M0
M1
NC R28
4.7K R29
4.7K R31
NC R32
JTAG_TDO
JTAG_TMS
JTAG_TDI
JTAG_TCK
C28
C29
C30
C31
C32
C33
C34
C35
C36
C37
C38
C39
C40
0.1uF/10V
C41
C42
C43
0.1uF
米联客
MiLianKe
www.uisrc.com
MLKPAI-FMin01
ProjectName: <Doc>
Size: A4
Page Title: P03 BANK IO
Rev: <RevCode>
Date: Thursday, July 17, 2025
Sheet 3 of 9

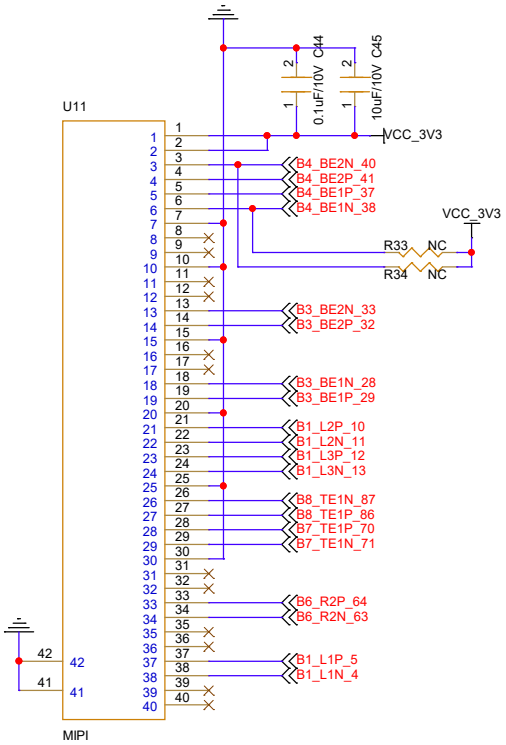

米联客 MiLianKe	
www.uisrc.com	MLKPAI-FMin01
ProjectName: <Doc>	
Size: B / Page Title: P04 DVP	Rev: <RevCode>
Date: Thursday, July 17, 2025	Sheet 4 of 9

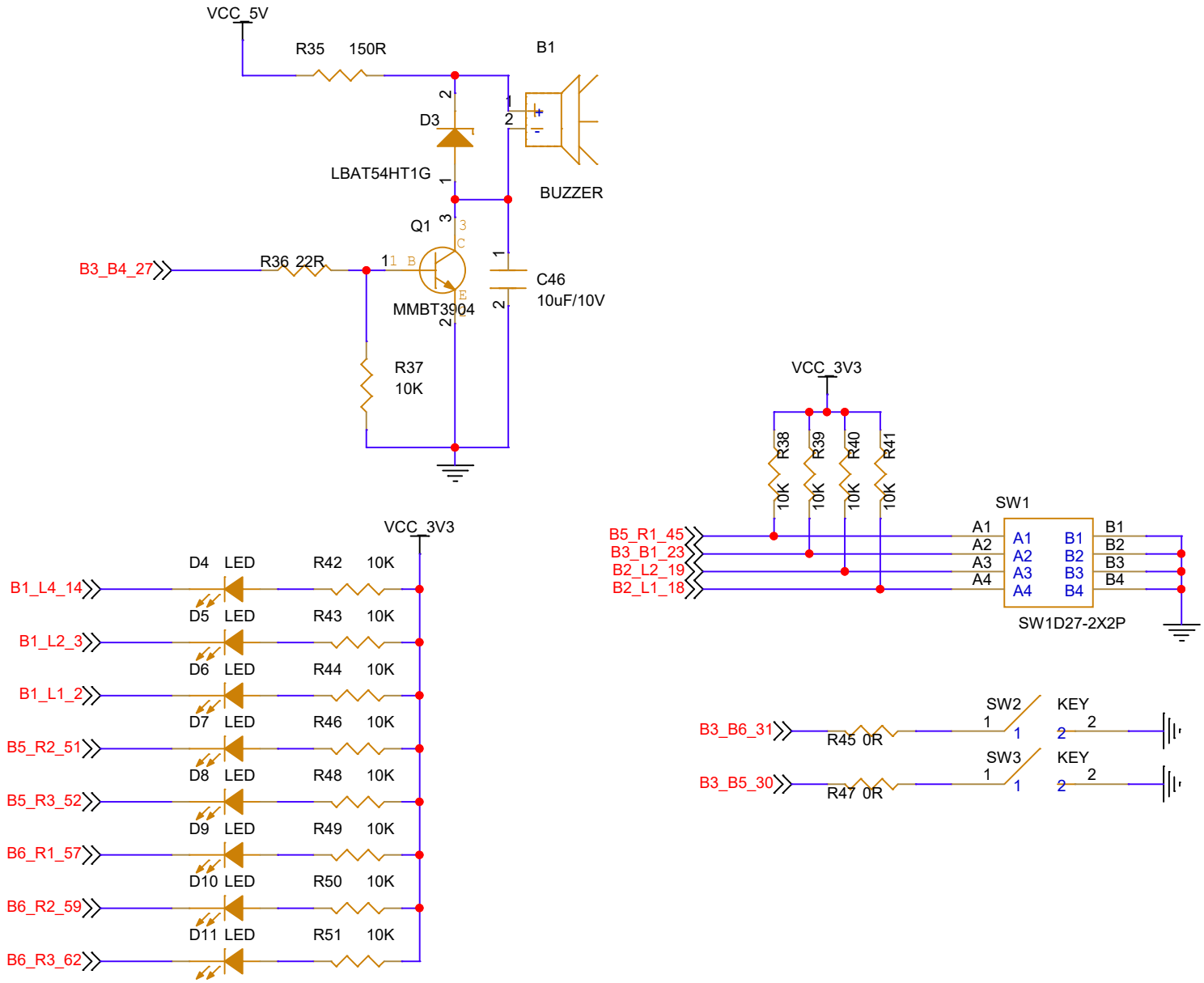

米联客 MiLianKe

www.uisrc.com

MLKPAI-FMin01

ProjectName: <Doc>			
Size: A	Page Title: P05_LED&KEY&BUZZER	Rev:	<RevCode>
Date: Thursday, July 17, 2025		Sheet 5 of 9	

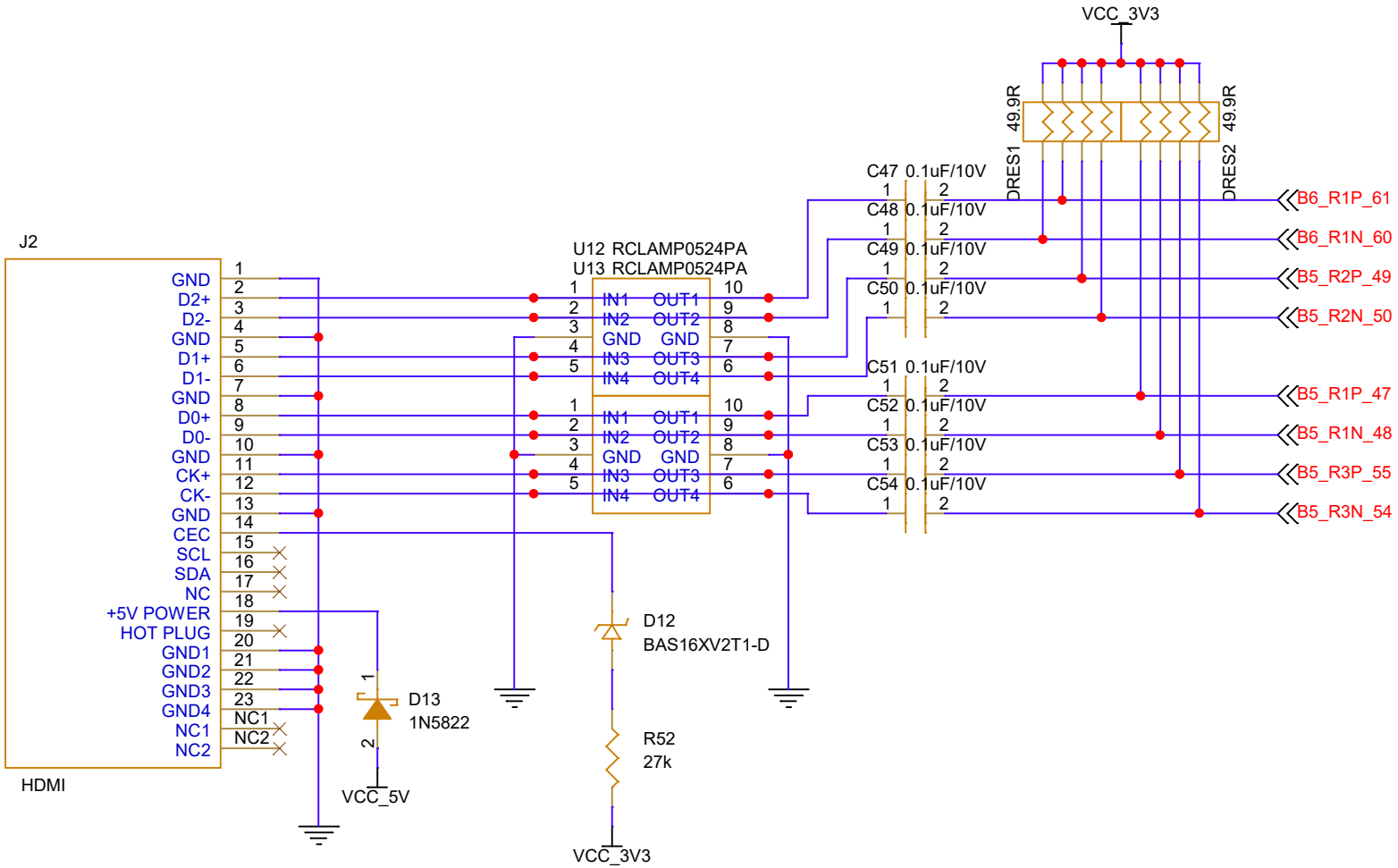

米联客 MiLianKe

www.uisrc.com

MLKPAI-FMin01

ProjectName: <Doc>			
Size: A	Page Title: P06_HDMI	Rev:	<RevCode>
Date: Thursday, July 17, 2025		Sheet 6 of 9	

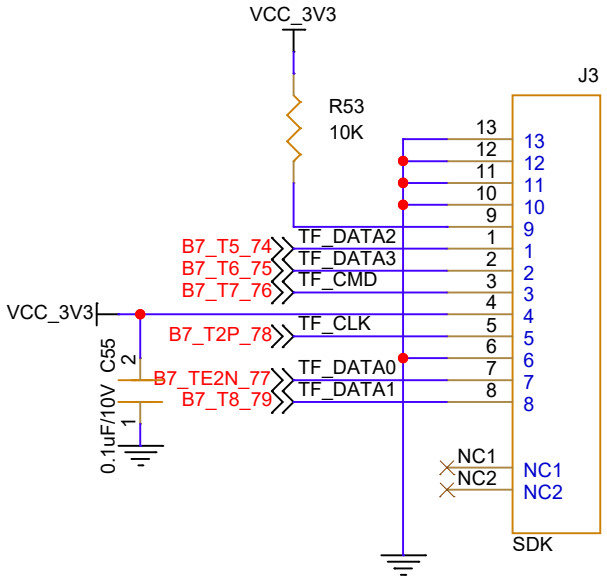

米联客 MiLianKe

www.uisrc.com

MLKPAI-FMin01

ProjectName: <Doc>			
Size: A	Page Title: P07_TF	Rev:	<RevCode>
Date: Thursday, July 17, 2025		Sheet 7 of 9	

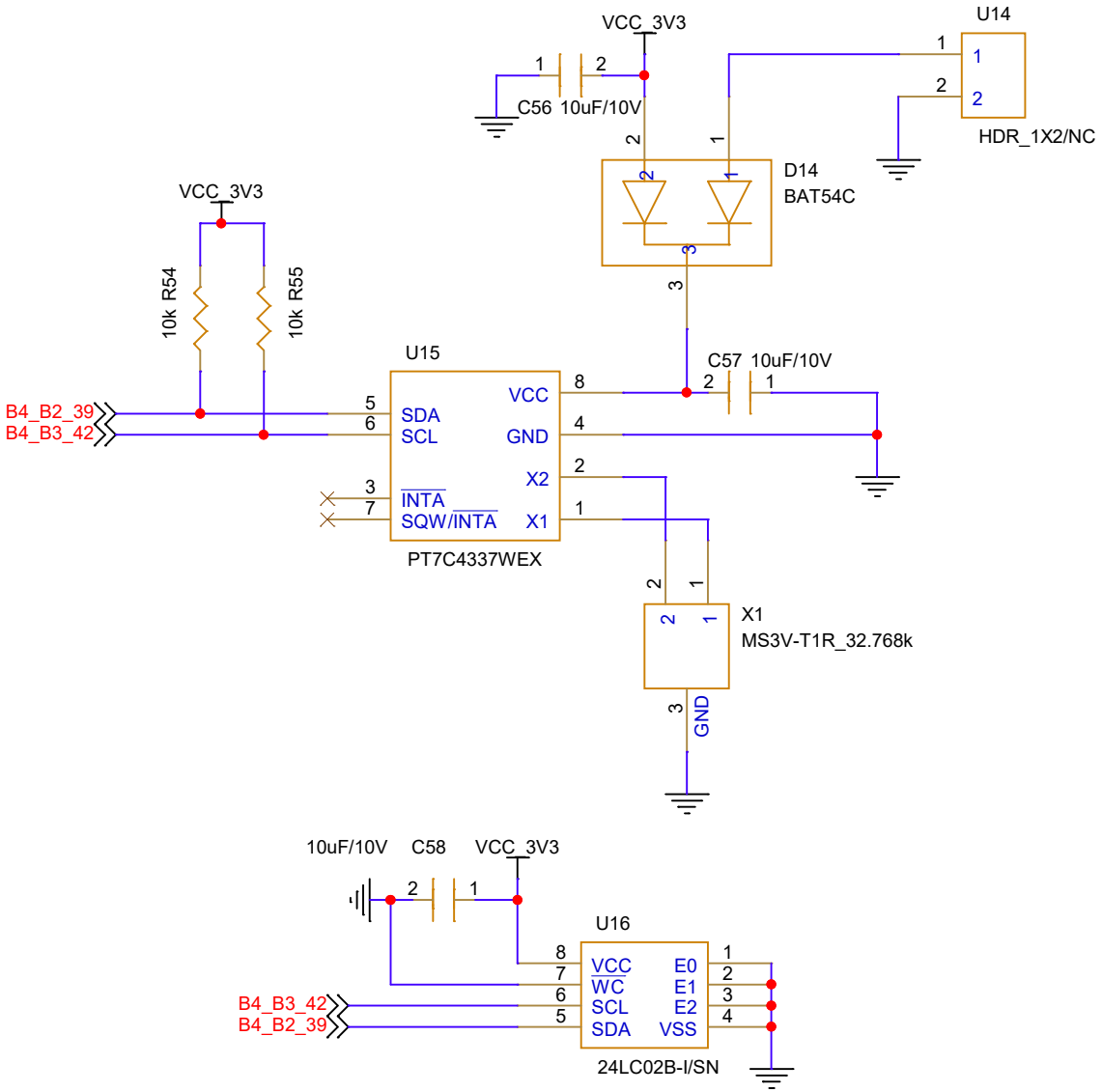

米联客 MiLianKe

www.uisrc.com MLKPAI-FMin01

ProjectName: <Doc>			
Size: A	Page Title: P08_EEPROM&RTC	Rev:	<RevCode>
Date: Thursday, July 17, 2025		Sheet 8 of 9	

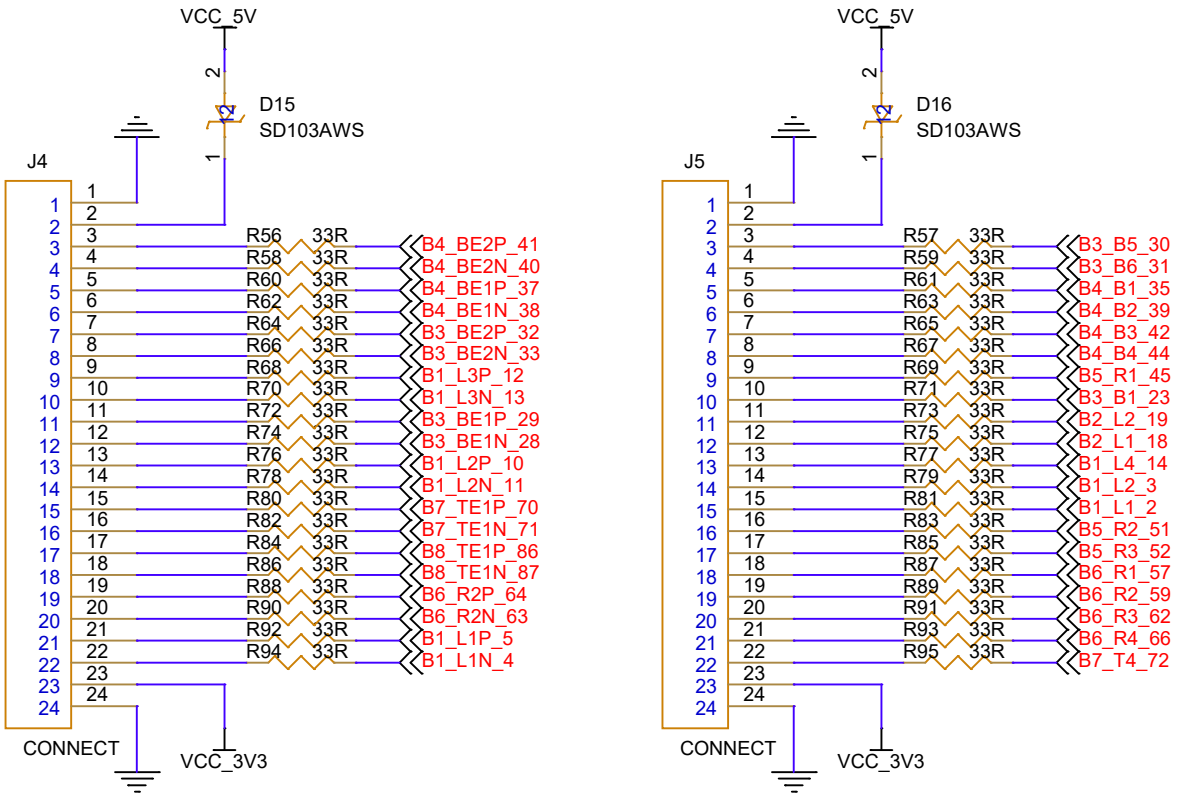

米联客 MiLianKe

www.uisrc.com MLKPAI-FMin01

ProjectName: <Doc>			
Size: A	Page Title: P09_Connect	Rev:	<RevCode>
Date: Thursday, July 17, 2025	Sheet 9 of 9		