STM32MP157 EVAL

MB1262

Table of contents

Sheet 1: Project (this page)

Sheet 2: Top

Sheet 3: Samtec connectors

Sheet 4: NAND

Sheet 5: QSPI

Sheet 6: Motor Control

Sheet 7: CAN FD&TT

Sheet 8: USB Host Hub & OTG

Sheet 9: JTAG & Trace

Sheet 10: RS232

Sheet 11: AUDIO

Sheet 12: DSI RGB DCMI

Sheet 13: SMARTCARD

Sheet 14-15 : ETHERNET

Sheet 16: PERIPHERALS

Sheet 17: MFX

Legend

Compared to MB1262B :
CAN FD & TT supported through MCP2561, NAND 8b, QSPI reset circuitry, SUB_NRST, SAI2_B implemented

Text to be added to silkscreen.
Warning text.

Notes to generate the board layout.

Open Platform License Agreement

The Open Platform License Agreement (“Agreement”) is a binding legal contract between you ("You") and STMicroelectronics International N.V. (“ST”), a company incorporated under the laws of the Netherlands acting for the purpose of this Agreement through its Swiss branch 39, Chemin du Champ des Filles, 1228 Plan-les-Ouates, Geneva, Switzerland.

By using the enclosed reference designs, schematics, PC board layouts, and documentation, in hardcopy or CAD tool file format (collectively, the “Reference Material”), You are agreeing to be bound by the terms and conditions of this Agreement. Do not use the Reference Material until You have read and agreed to this Agreement terms and conditions. The use of the Reference Material automatically implies the acceptance of the Agreement terms and conditions.

The complete Open Platform License Agreement can be found on www.st.com/opla.

U_MB1262-TOP
MB1262-TOP.SchDoc

Title: **MB1262**		
Project: **STM32MP157 EVAL**		
Variant: [No Variations]		
Revision: C-01		Reference: MB1262
Size: A4	Date: 12-DEC-18	Sheet: 1 of 17

life.augmented

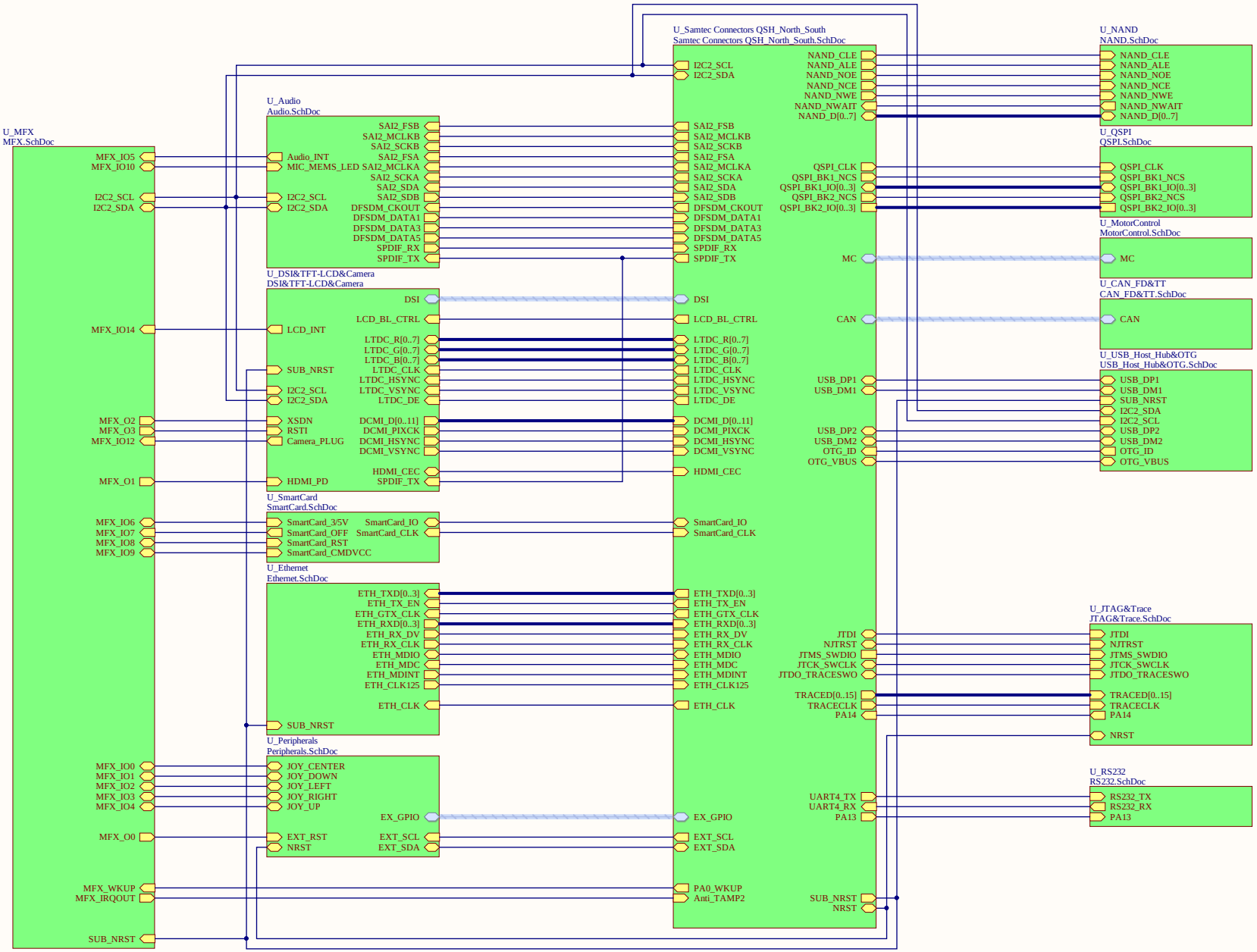

Title: **MB1262-TOP**			
Project: **STM32MP15x-EVAL**			
Size: A3	Reference: MB1262	Revision: C-01	
Date: 12/12/2018		Sheet: 2 of 17	

life.augmented

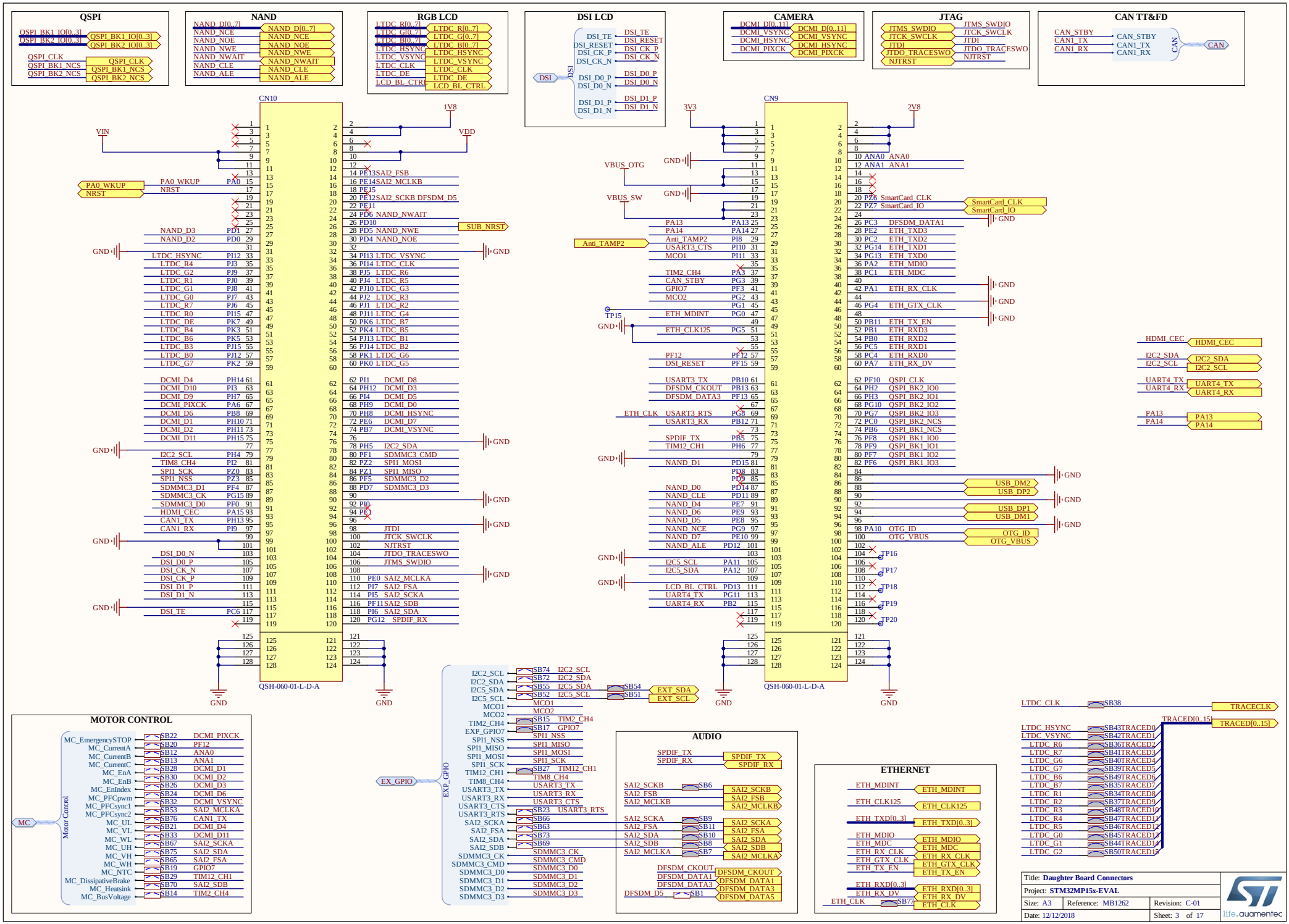
QSPI
QSPI_BK1_IO[0..3]
QSPI_BK2_IO[0..3]
QSPI_CLK
QSPI_BK1_NCS
QSPI_BK2_NCS
NAND
NAND_D[0..7]
NAND_NCE
NAND_NOE
NAND_NWE
NAND_NWAIT
NAND_CLE
NAND_ALE
RGB LCD
LTDC_R[0..7]
LTDC_G[0..7]
LTDC_B[0..7]
LTDC_HSYNC
LTDC_VSYNC
LTDC_CLK
LTDC_DE
LCD_BL_CTRL
DSI LCD
DSI_TE
DSI_RESET
DSI_CK_P
DSI_CK_N
DSI_D0_P
DSI_D0_N
DSI_D1_P
DSI_D1_N
CAMERA
DCMI_D[0..11]
DCMI_VSYNC
DCMI_HSYNC
DCMI_PIXCK
JTAG
JTMS_SWDIO
JTCK_SWCLK
JTDI
JTDO_TRACESWO
NJTRST
CAN TT&FD
CAN_STBY
CAN1_TX
CAN1_RX
CAN
CN10
CN9
QSH-060-01-L-D-A
VIN
VDD
1V8
3V3
2V8
GND
SUB_NRST
PA0_WKUP
NRST
VBUS_OTG
VBUS_SW
Anti_TAMP2
TP15
TP16
TP17
TP18
TP19
TP20
SmartCard_CLK
SmartCard_IO
USB_DM2
USB_DP2
USB_DP1
USB_DM1
OTG_ID
OTG_VBUS
HDMI_CEC
I2C2_SDA
I2C2_SCL
UART4_TX
UART4_RX
PA13
PA14
MOTOR CONTROL
MC
Motor Control
MC_EmergencySTOP
MC_CurrentA
MC_CurrentB
MC_CurrentC
MC_EnA
MC_EnB
MC_EnIndex
MC_PFCpwm
MC_PFCsync1
MC_PFCsync2
MC_UL
MC_VL
MC_WL
MC_UH
MC_VH
MC_WH
MC_NTC
MC_DissipativeBrake
MC_Heatsink
MC_BusVoltage
EX_GPIO
EXP_GPIO
EXT_SDA
EXT_SCL
AUDIO
SPDIF_TX
SPDIF_RX
SAI2_SCKB
SAI2_FSB
SAI2_MCLKB
SAI2_SCKA
SAI2_FSA
SAI2_SDA
SAI2_SDB
SAI2_MCLKA
SDMMC3_CK
SDMMC3_CMD
SDMMC3_D0
SDMMC3_D1
SDMMC3_D2
SDMMC3_D3
DFSDM_CKOUT
DFSDM_DATA1
DFSDM_DATA3
DFSDM_DATA5
DFSDM_D5
ETHERNET
ETH_MDINT
ETH_CLK125
ETH_TXD[0..3]
ETH_MDIO
ETH_MDC
ETH_RX_CLK
ETH_GTX_CLK
ETH_TX_EN
ETH_RXD[0..3]
ETH_RX_DV
ETH_CLK
TRACECLK
TRACED[0..15]
LTDC_CLK
LTDC_HSYNC
LTDC_VSYNC
LTDC_R6
LTDC_R7
LTDC_G6
LTDC_G7
LTDC_B6
LTDC_B7
LTDC_R1
LTDC_R2
LTDC_R3
LTDC_R4
LTDC_R5
LTDC_G0
LTDC_G1
LTDC_G2
Title: Daughter Board Connectors
Project: STM32MP15x-EVAL
Size: A3
Reference: MB1262
Revision: C-01
Date: 12/12/2018
Sheet: 3 of 17
life.augmentec

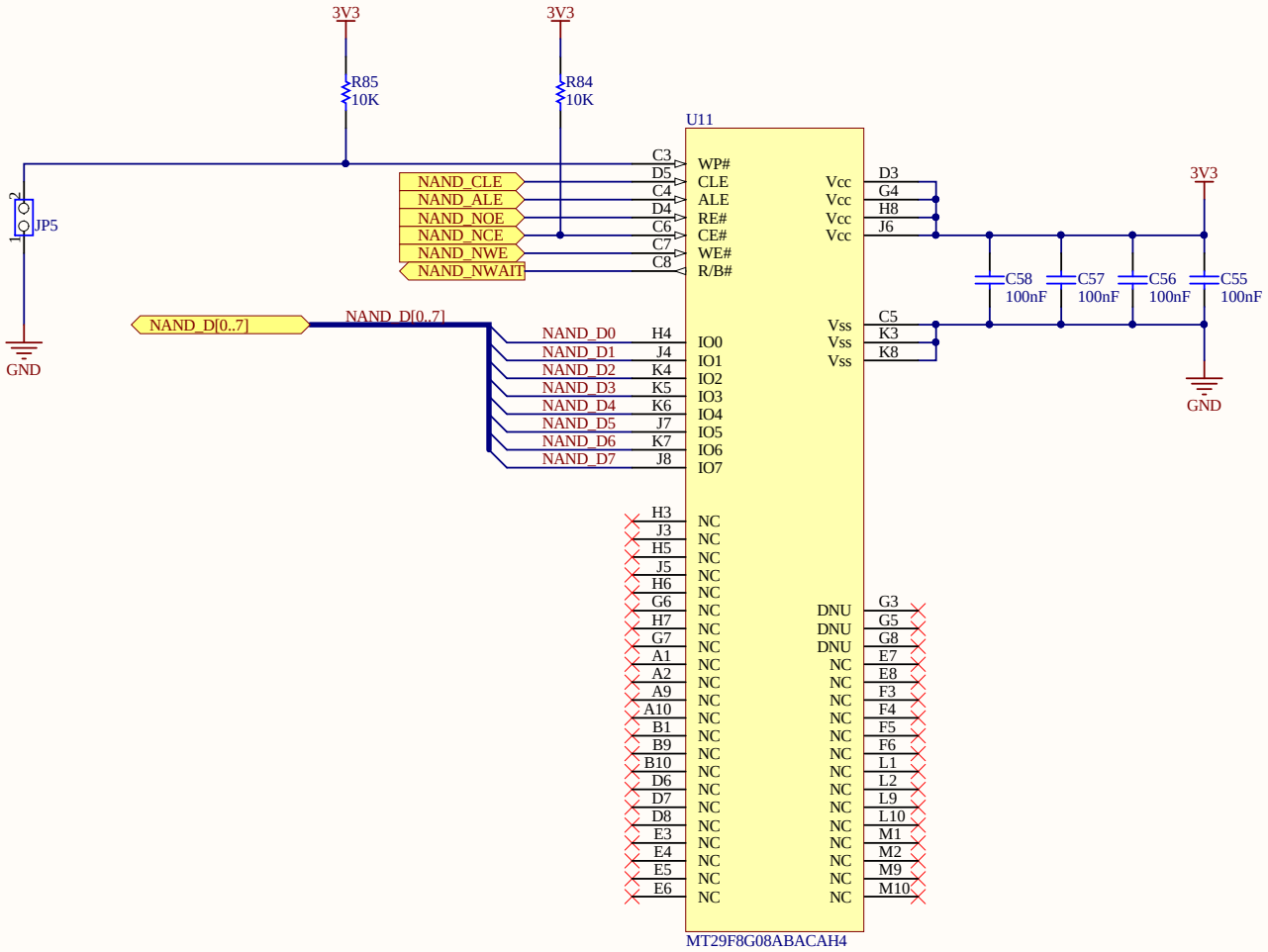

Title: **NAND Flash**		
Project: **STM32MP15x-EVAL**		
Size: A4	Reference: MB1262	Revision: C-01
Date: 3/26/2018		Sheet: 4 of 17

life.augmented

Quad SPI Flash

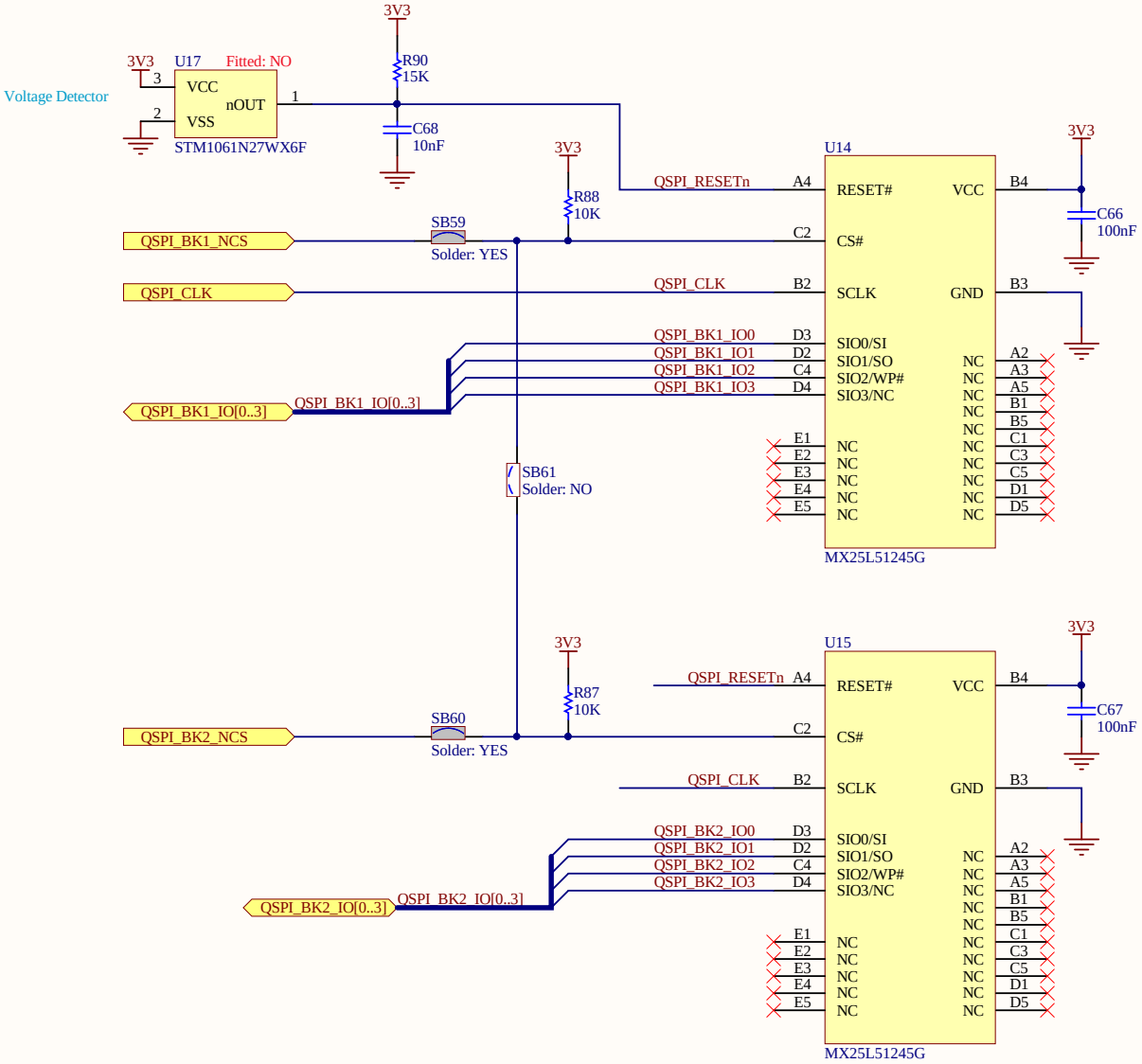

Title: **QSPI**		
Project: **STM32MP15x-EVAL**		
Size: A4	Reference: MB1262	Revision: B-01
Date: 3/26/2018		Sheet: 5 of 17

life.augmented

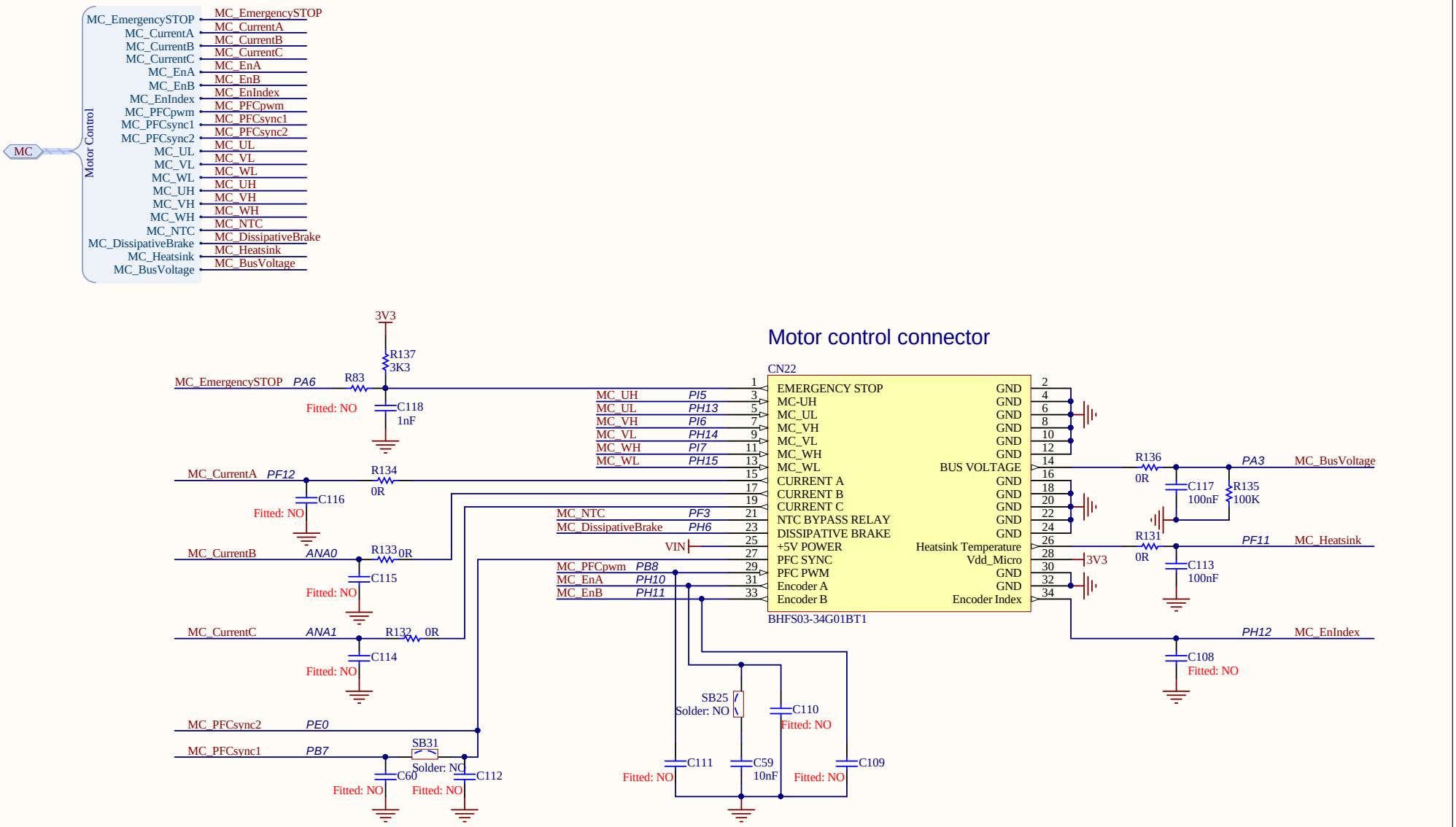

Title: **Motor Control**		
Project: **STM32MP15x-EVAL**		
Size: A4	Reference: MB1262	Revision: C-01
Date: 12/11/2017		Sheet: 6 of 17

life.augmented

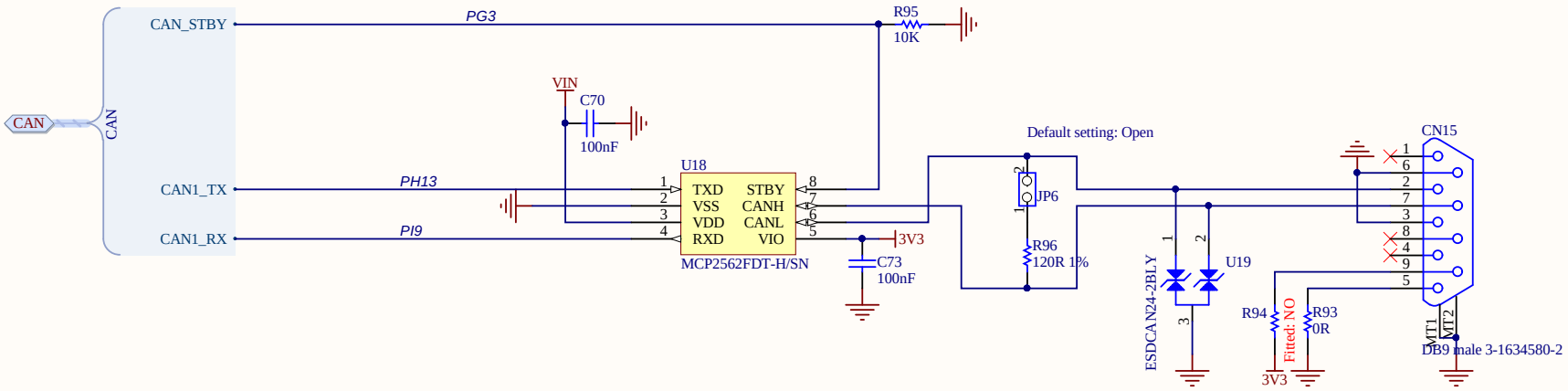

Title: **CAN FD&TT**		
Project: **STM32MP15x-EVAL**		
Size: A4	Reference: MB1262	Revision: C-01
Date: 5/18/2018		Sheet: 7 of 17

life.augmented

USB_HOST_HUBx4

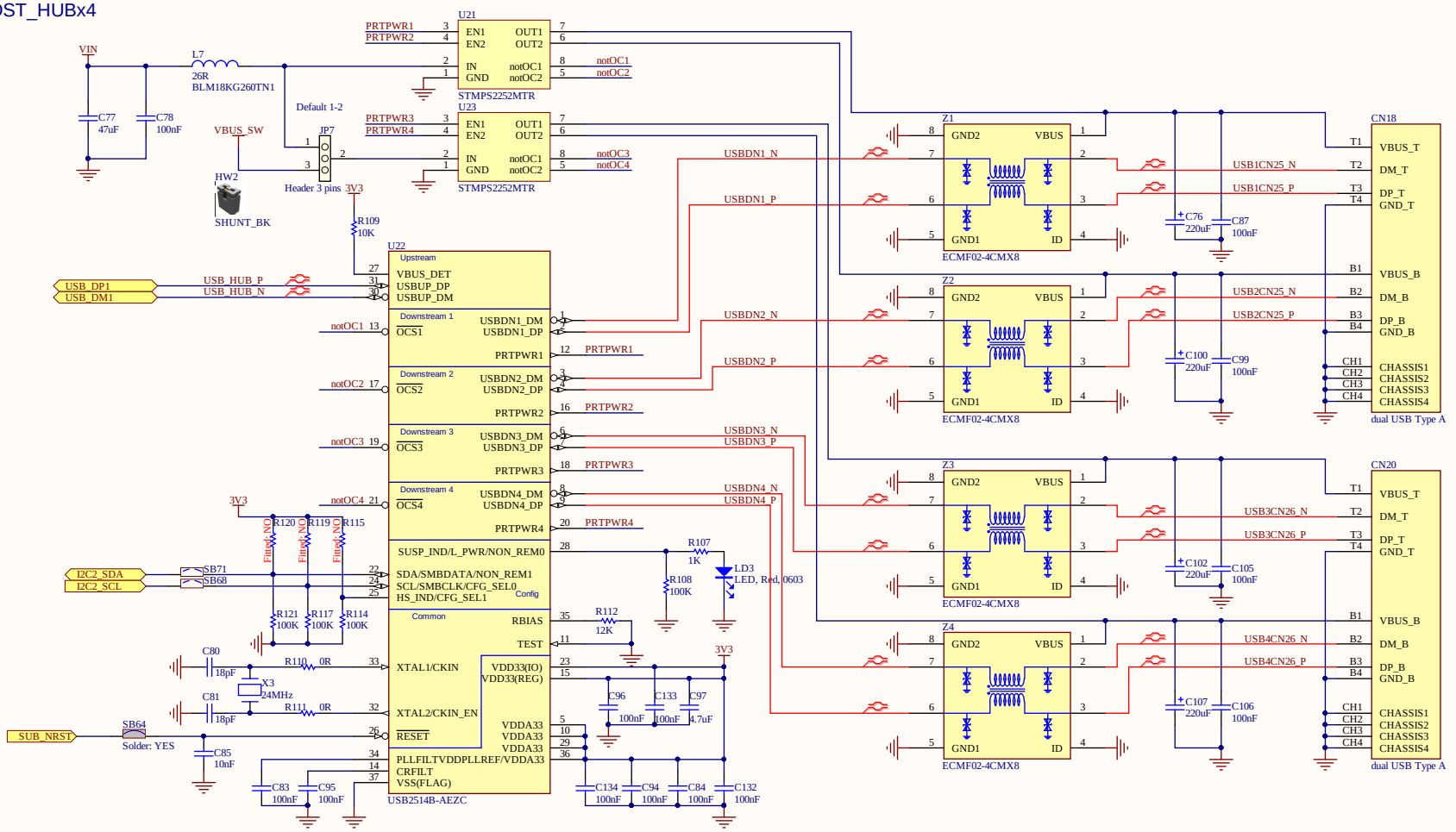

USB_OTG

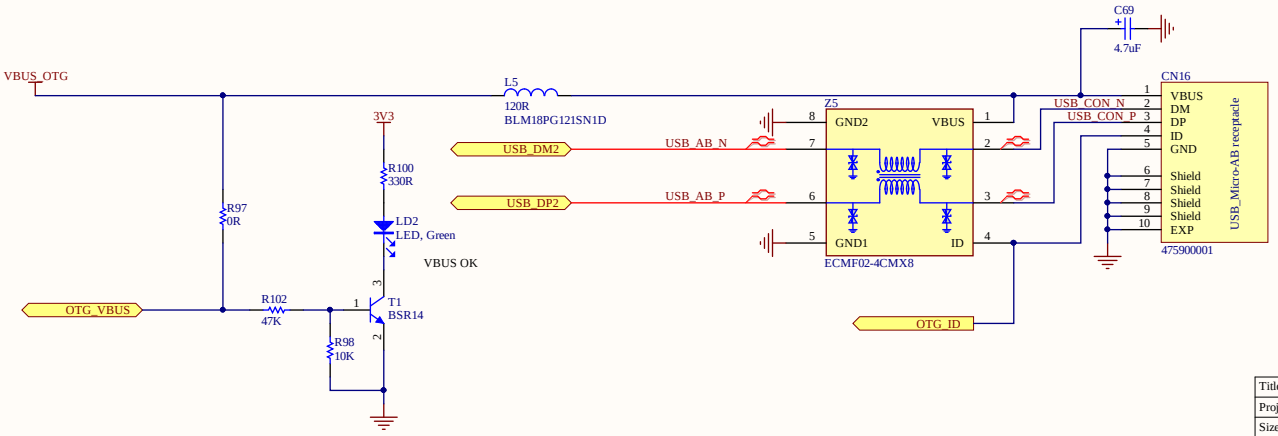

Title: **USB_Host_Hub**		
Project: **STM32MP15x-EVAL**		
Size: A3	Reference: MB1262	Revision: C-01
Date: 5/18/2018		Sheet: 8 of 17

life.augmented

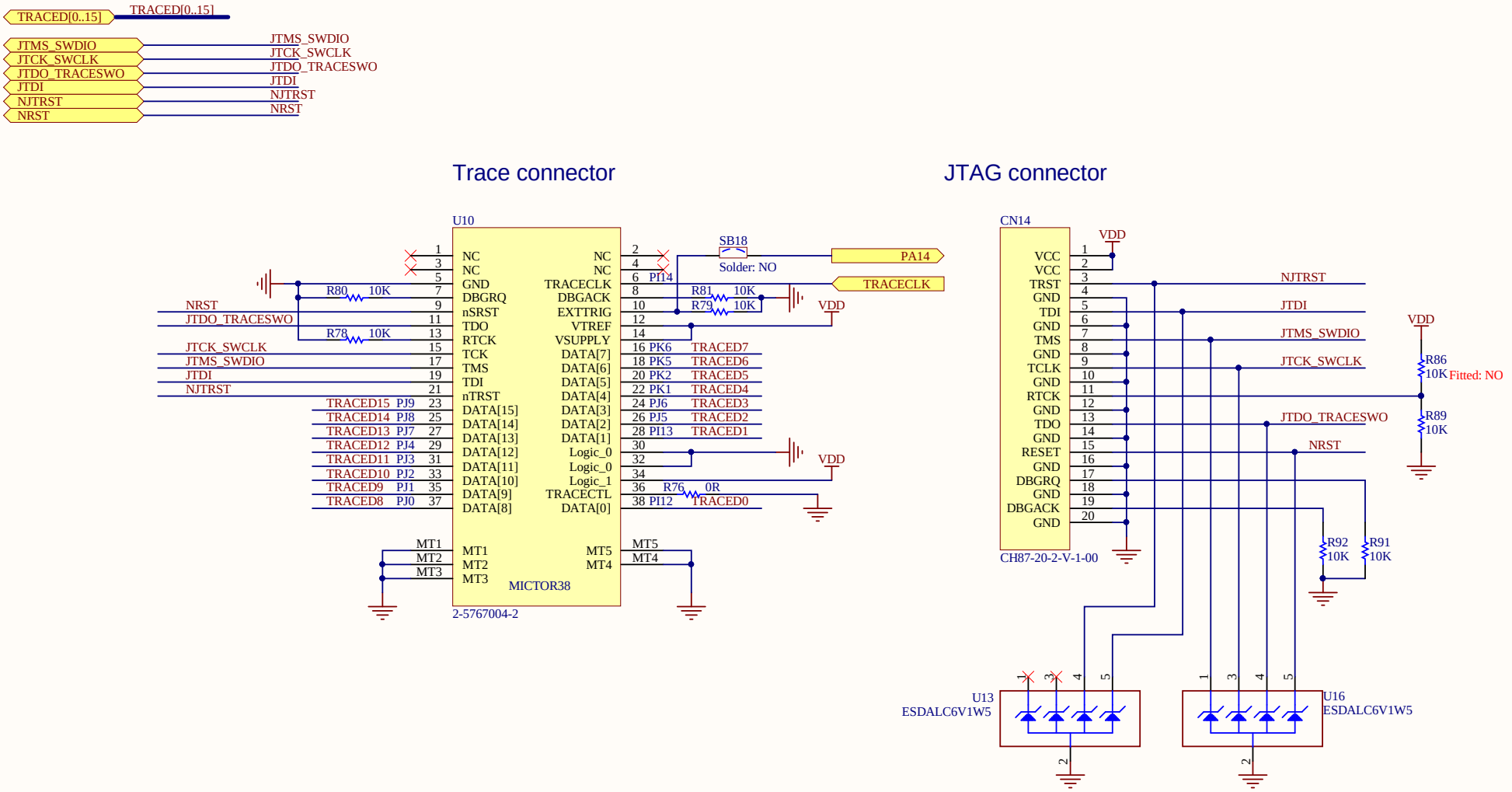

Title: **JTAG & Trace**		
Project: **STM32MP15x-EVAL**		
Size: A4	Reference: MB1262	Revision: C-01
Date: 5/18/2018		Sheet: 9 of 17

life.augmented

RS232

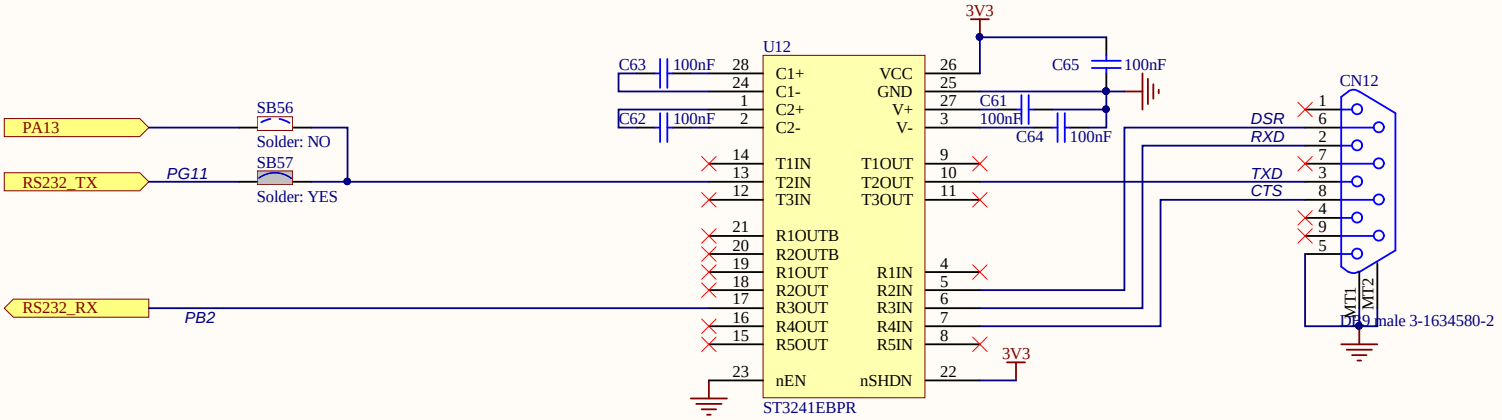

Title: **RS232**		
Project: **STM32MP15x-EVAL**		
Size: A4	Reference: MB1262	Revision: C-01
Date: 5/18/2018		Sheet: 10 of 17

life.augmented

Microphone MEMS Daughter Board Connector MB1299

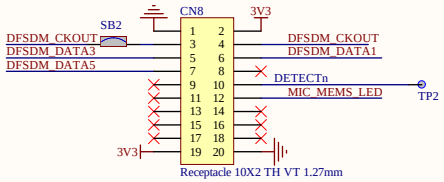

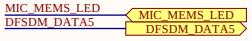

AUDIO CODEC

Default I2C Address: 0011 0110

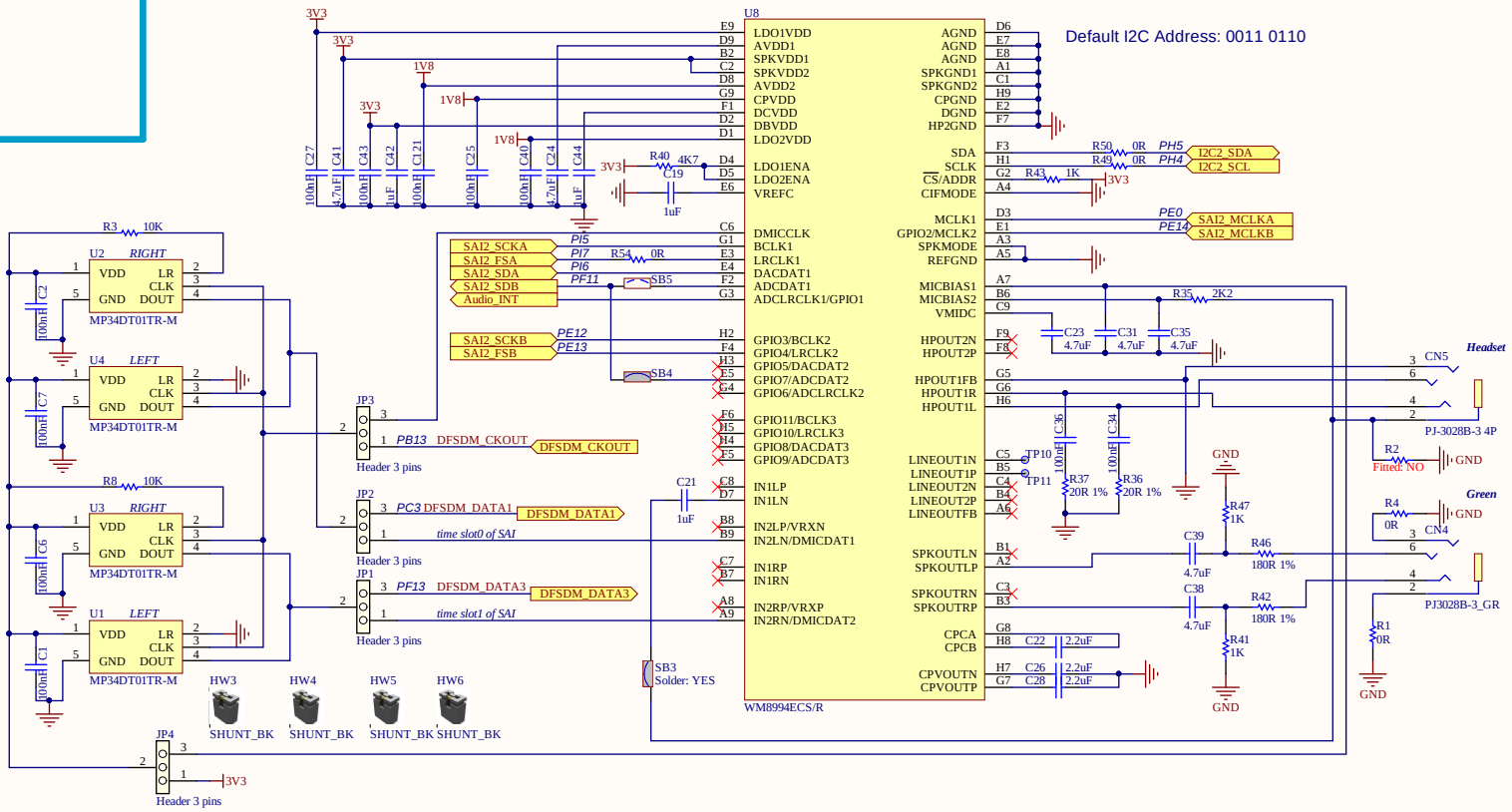

SPDIF RX/TX

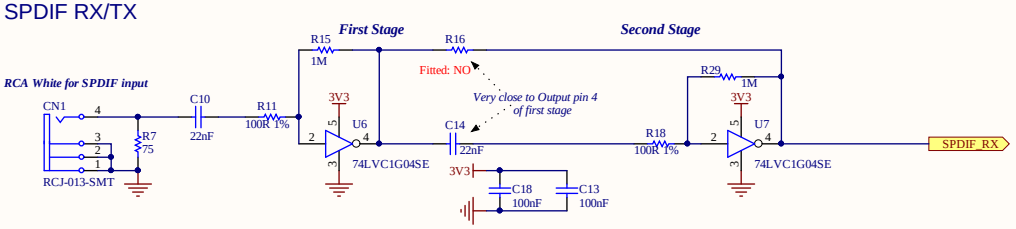

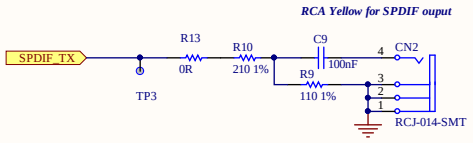

Title: **Audio**		
Project: **STM32MP15x-EVAL**		
Size: A3	Reference: MB1262	Revision: C-01
Date: 12/12/2018		Sheet: 11 of 17

life.augmented

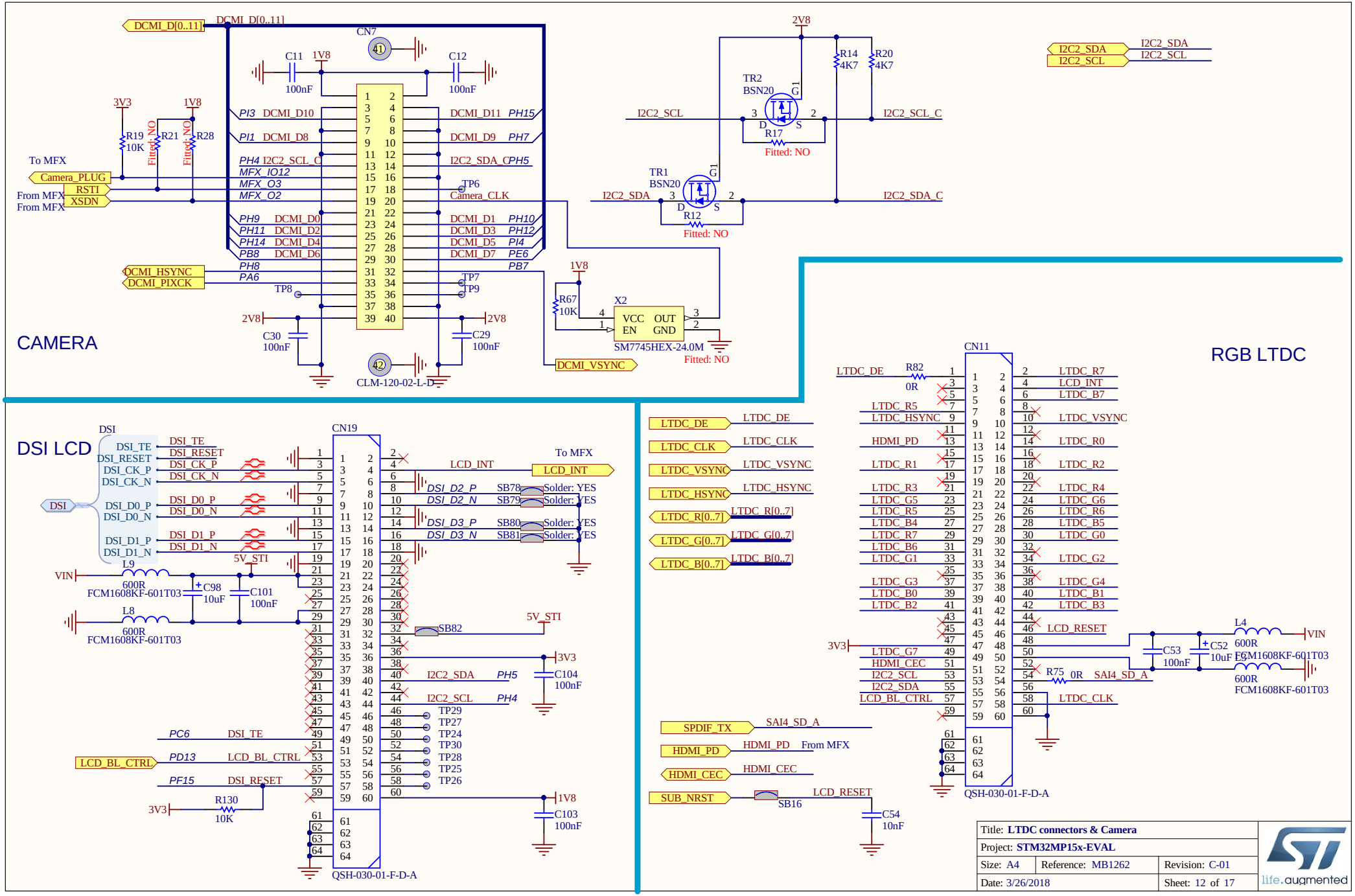
CAMERA
DCMI_D[0..11]
CN7
CLM-120-02-L-D
C11 100nF
C12 100nF
1V8
3V3
R19 10K
R21 Fitted: NO
R28 Fitted: NO
To MFX
Camera_PLUG
RSTI
XSDN
From MFX
From MFX
PI3 DCMI_D10
PI1 DCMI_D8
PH4 I2C2_SCL_C
MFX_IO12
MFX_O3
MFX_O2
PH9 DCMI_D0
PH11 DCMI_D2
PH14 DCMI_D4
PB8 DCMI_D6
PH8
PA6
DCMI_HSYNC
DCMI_PIXCK
TP8
DCMI_D11 PH15
DCMI_D9 PH7
I2C2_SDA_C PH5
TP6 Camera_CLK
DCMI_D1 PH10
DCMI_D3 PH12
DCMI_D5 PI4
DCMI_D7 PE6
PB7
TP7
TP9
2V8
C30 100nF
C29 100nF
R67 10K
X2
VCC OUT
EN GND
SM7745HEX-24.0M
Fitted: NO
DCMI_VSYNC
TR2 BSN20
R14 4K7
R20 4K7
R17 Fitted: NO
TR1 BSN20
R12 Fitted: NO
I2C2_SCL
I2C2_SCL_C
I2C2_SDA
I2C2_SDA_C
I2C2_SDA
I2C2_SCL
RGB LTDC
CN11
QSH-030-01-F-D-A
LTDC_DE
R82 0R
LTDC_R5
LTDC_HSYNC
HDMI_PD
LTDC_R1
LTDC_R3
LTDC_G5
LTDC_R5
LTDC_B4
LTDC_R7
LTDC_B6
LTDC_G1
LTDC_G3
LTDC_B0
LTDC_B2
LTDC_G7
HDMI_CEC
I2C2_SCL
I2C2_SDA
LCD_BL_CTRL
LTDC_R7
LCD_INT
LTDC_B7
LTDC_VSYNC
LTDC_R0
LTDC_R2
LTDC_R4
LTDC_G6
LTDC_R6
LTDC_B5
LTDC_G0
LTDC_G2
LTDC_G4
LTDC_B1
LTDC_B3
LCD_RESET
R75 0R
SAI4_SD_A
LTDC_CLK
C53 100nF
C52 10uF
L4 600R FCM1608KF-601T03
L3 600R FCM1608KF-601T03
VIN
SPDIF_TX
HDMI_PD
HDMI_CEC
SUB_NRST
SB16
C54 10nF
DSI LCD
DSI
DSI_TE
DSI_RESET
DSI_CK_P
DSI_CK_N
DSI_D0_P
DSI_D0_N
DSI_D1_P
DSI_D1_N
CN19
QSH-030-01-F-D-A
LCD_INT
To MFX
DSI_D2_P SB78 Solder: YES
DSI_D2_N SB79 Solder: YES
DSI_D3_P SB80 Solder: YES
DSI_D3_N SB81 Solder: YES
5V_STI
L9 600R FCM1608KF-601T03
L8 600R FCM1608KF-601T03
C98 10uF
C101 100nF
SB82
C104 100nF
I2C2_SDA PH5
I2C2_SCL PH4
TP29
TP27
TP24
TP30
TP28
TP25
TP26
PC6 DSI_TE
PD13 LCD_BL_CTRL
PF15 DSI_RESET
R130 10K
C103 100nF
Title: LTDC connectors & Camera
Project: STM32MP15x-EVAL
Size: A4
Reference: MB1262
Revision: C-01
Date: 3/26/2018
Sheet: 12 of 17
life.augmented

SmartCard

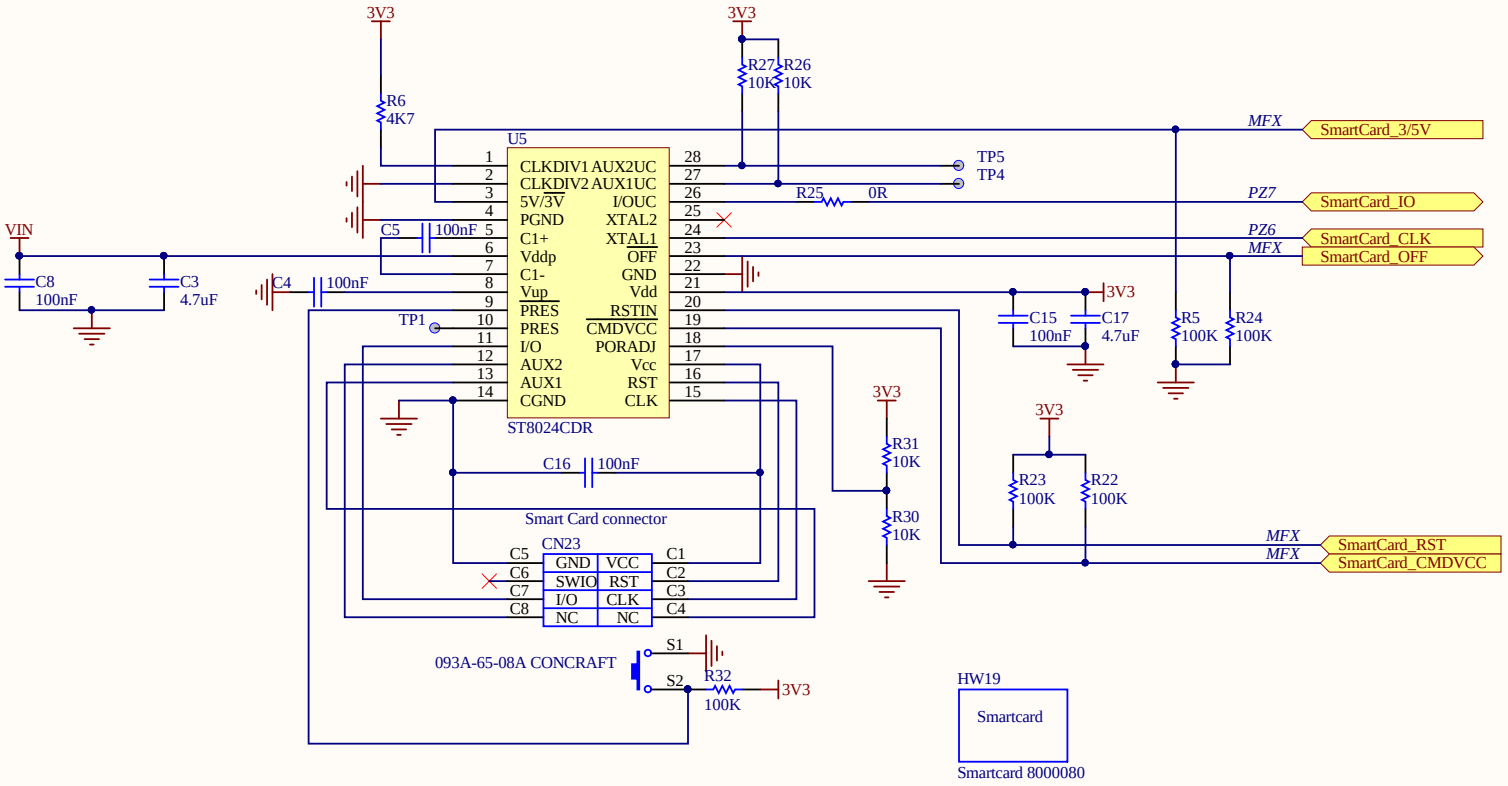

Title: **SmartCard**		
Project: **STM32MP15x-EVAL**		
Size: A4	Reference: MB1262	Revision: C-01
Date: 5/18/2018		Sheet: 13 of 17

life.augmented

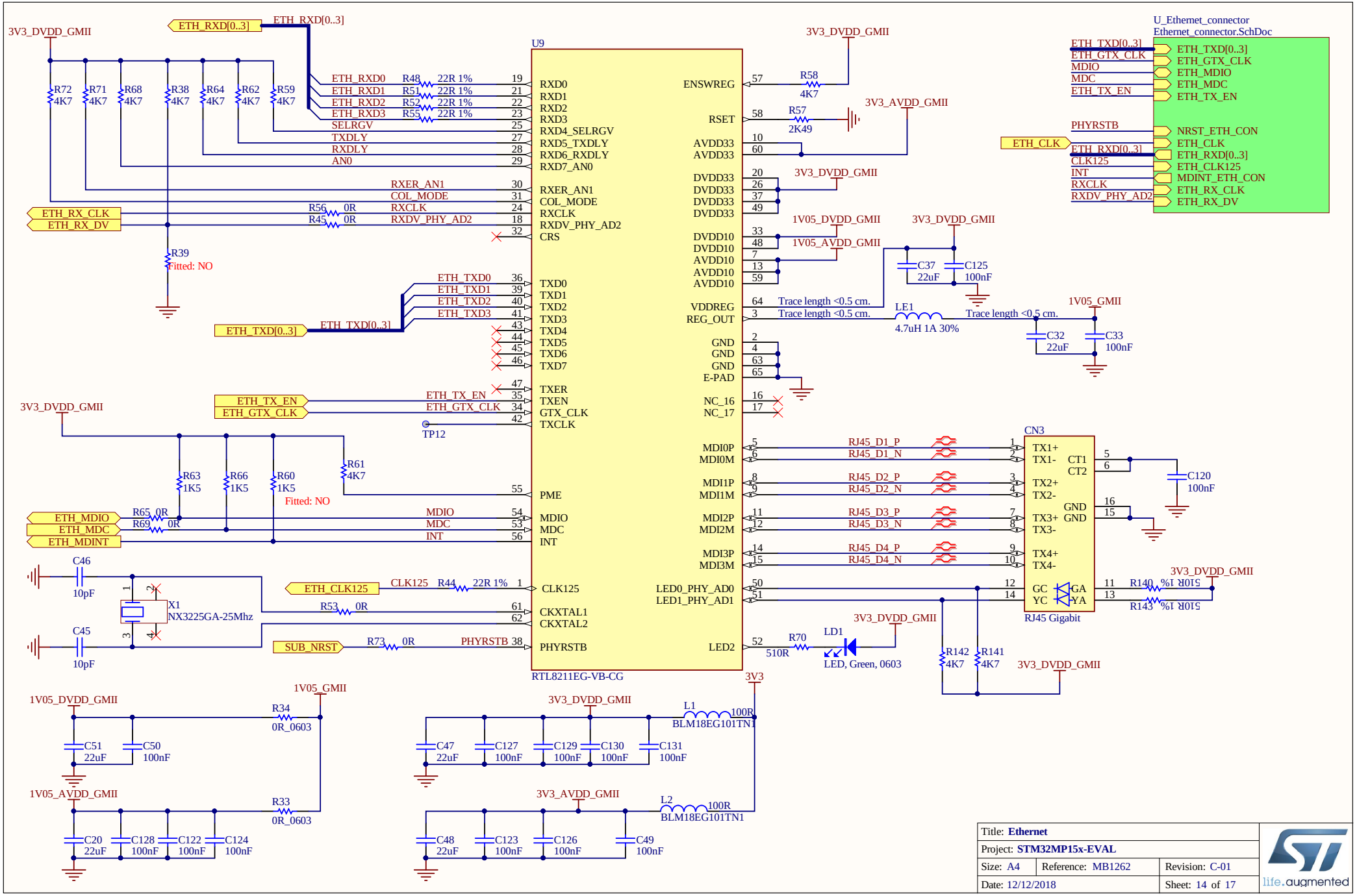
U9
RTL8211EG-VB-CG
U_Ethernet_connector
Ethernet_connector.SchDoc
ETH_TXD[0..3]
ETH_GTX_CLK
MDIO
MDC
ETH_TX_EN
PHYRSTB
ETH_CLK
ETH_RXD[0..3]
CLK125
INT
RXCLK
RXDV_PHY_AD2
NRST_ETH_CON
ETH_CLK
ETH_RXD[0..3]
ETH_CLK125
MDINT_ETH_CON
ETH_RX_CLK
ETH_RX_DV
3V3_DVDD_GMII
3V3_AVDD_GMII
1V05_DVDD_GMII
1V05_AVDD_GMII
1V05_GMII
3V3
RXD0
RXD1
RXD2
RXD3
RXD4_SELRGV
RXD5_TXDLY
RXD6_RXDLY
RXD7_AN0
RXER_AN1
COL_MODE
RXCLK
RXDV_PHY_AD2
CRS
TXD0
TXD1
TXD2
TXD3
TXD4
TXD5
TXD6
TXD7
TXER
TXEN
GTX_CLK
TXCLK
PME
MDIO
MDC
INT
CLK125
CKXTAL1
CKXTAL2
PHYRSTB
ENSWREG
RSET
AVDD33
DVDD33
DVDD10
AVDD10
VDDREG
REG_OUT
GND
E-PAD
NC_16
NC_17
MDI0P
MDI0M
MDI1P
MDI1M
MDI2P
MDI2M
MDI3P
MDI3M
LED0_PHY_AD0
LED1_PHY_AD1
LED2
R72 4K7
R71 4K7
R68 4K7
R38 4K7
R64 4K7
R62 4K7
R59 4K7
R48 22R 1%
R51 22R 1%
R52 22R 1%
R55 22R 1%
R58 4K7
R57 2K49
R56 0R
R45 0R
R39 Fitted: NO
R63 1K5
R66 1K5
R60 1K5
R61 4K7 Fitted: NO
R65 0R
R69 0R
R44 22R 1%
R53 0R
R73 0R
R70 510R
R142 4K7
R141 4K7
R140 510R 1%
R143 510R 1%
R34 0R_0603
R33 0R_0603
C37 22uF
C125 100nF
C32 22uF
C33 100nF
C120 100nF
C46 10pF
C45 10pF
X1 NX3225GA-25Mhz
C51 22uF
C50 100nF
C20 22uF
C128 100nF
C122 100nF
C124 100nF
C47 22uF
C127 100nF
C129 100nF
C130 100nF
C131 100nF
C48 22uF
C123 100nF
C126 100nF
C49 100nF
L1 100R BLM18EG101TN1
L2 100R BLM18EG101TN1
LE1 4.7uH 1A 30%
Trace length <0.5 cm.
LD1 LED, Green, 0603
CN3 RJ45 Gigabit
TX1+
TX1-
TX2+
TX2-
TX3+
TX3-
TX4+
TX4-
CT1
CT2
GND
GA
YA
GC
YC
RJ45_D1_P
RJ45_D1_N
RJ45_D2_P
RJ45_D2_N
RJ45_D3_P
RJ45_D3_N
RJ45_D4_P
RJ45_D4_N
TP12
SUB_NRST
Title: Ethernet
Project: STM32MP15x-EVAL
Size: A4
Reference: MB1262
Revision: C-01
Date: 12/12/2018
Sheet: 14 of 17
life.augmented

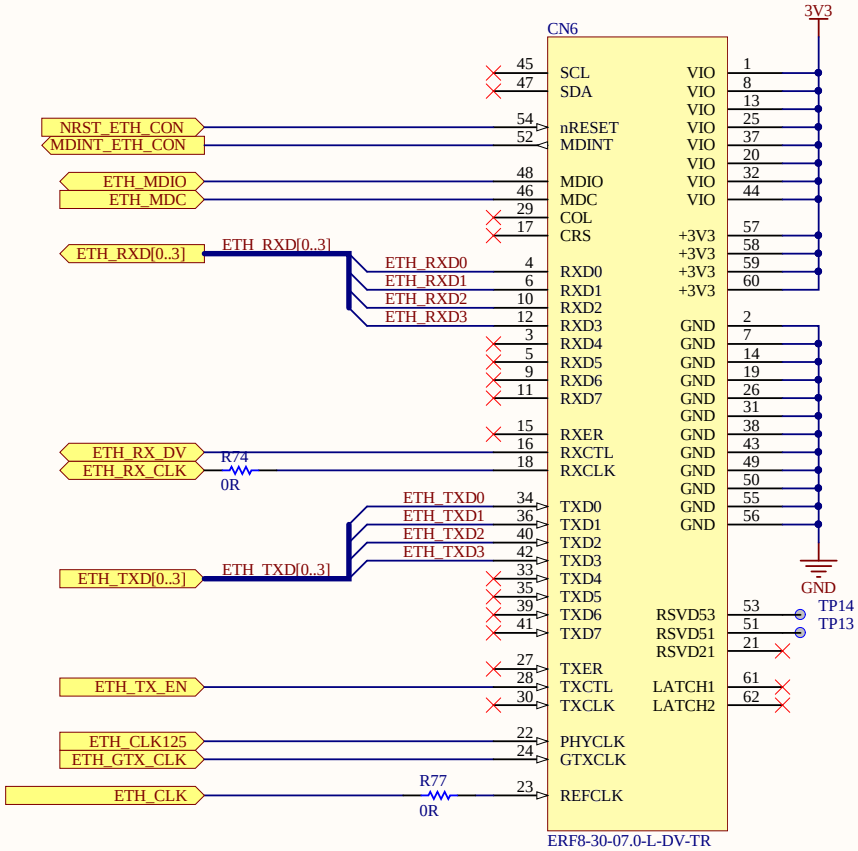

Title: **Ethernet_connector**		
Project: **STM32MP15x-EVAL**		
Size: A4	Reference: MB1262	Revision: C-01
Date: 12/11/2017		Sheet: 15 of 17

life.augmented

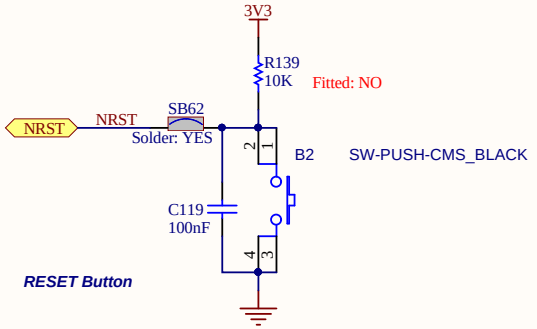

EXT E2P Connector

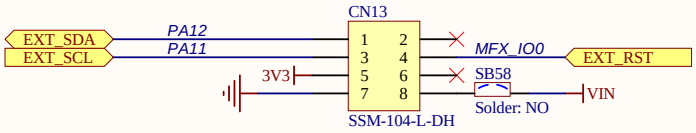

GPIO EXPANSION

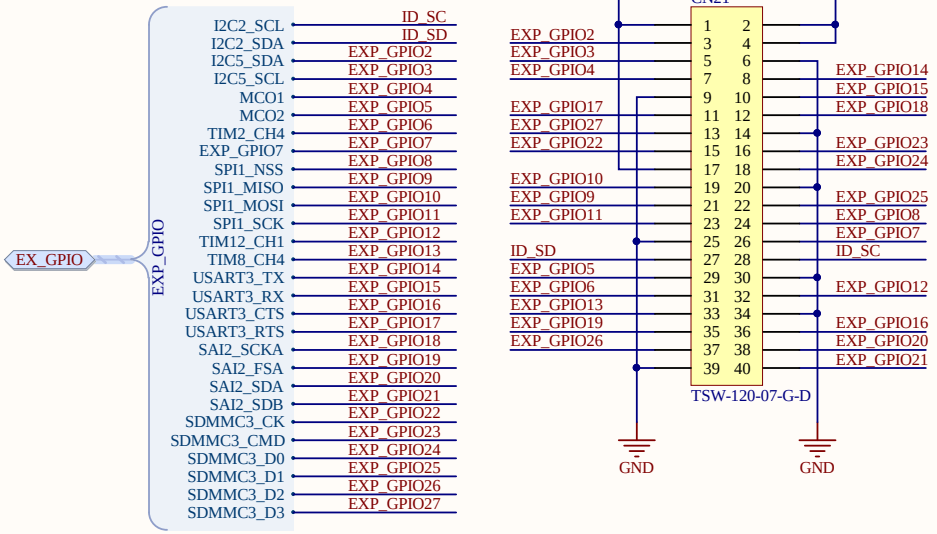

JOYSTICK

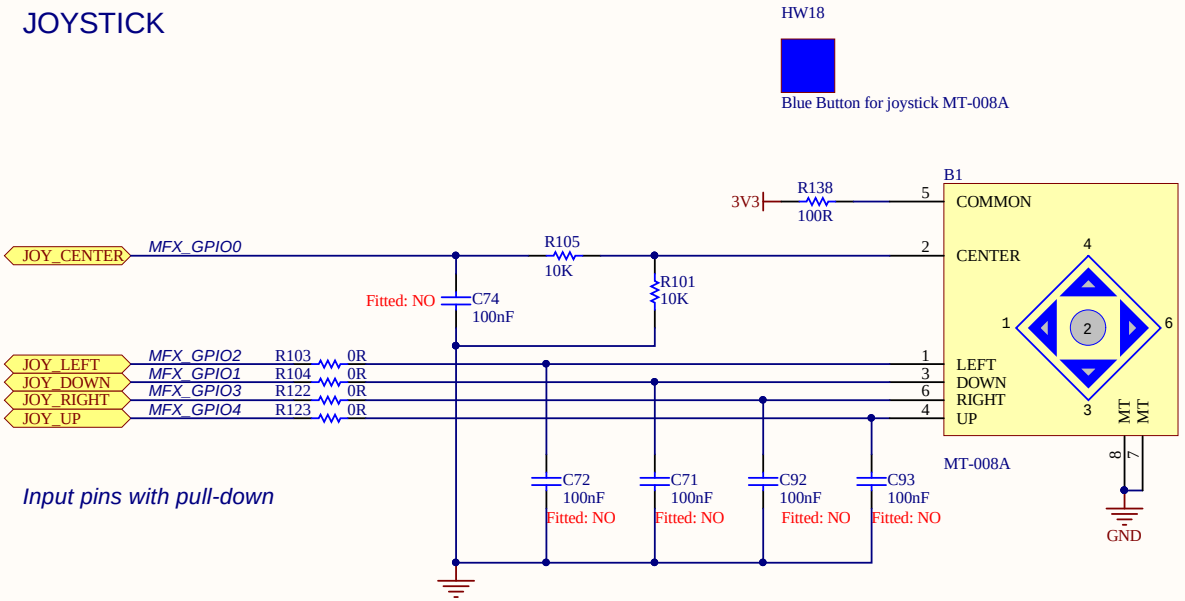

Miscellenaous

LCD

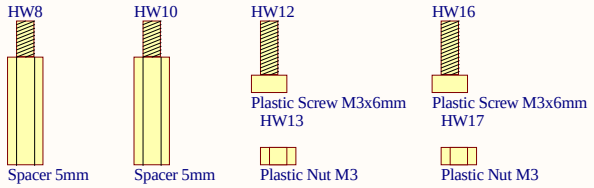

Board

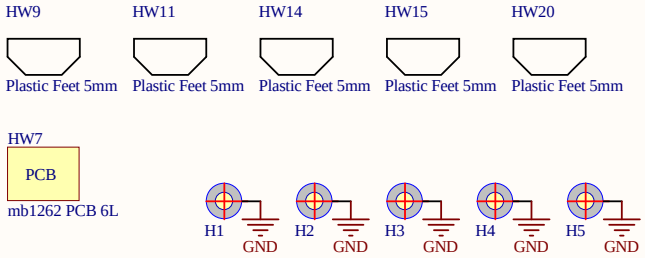

Title: **Peripherals**		
Project: **STM32MP15x-EVAL**		
Size: A4	Reference: MB1262	Revision: C-01
Date: 12/12/2018		Sheet: 16 of 17

life.augmented

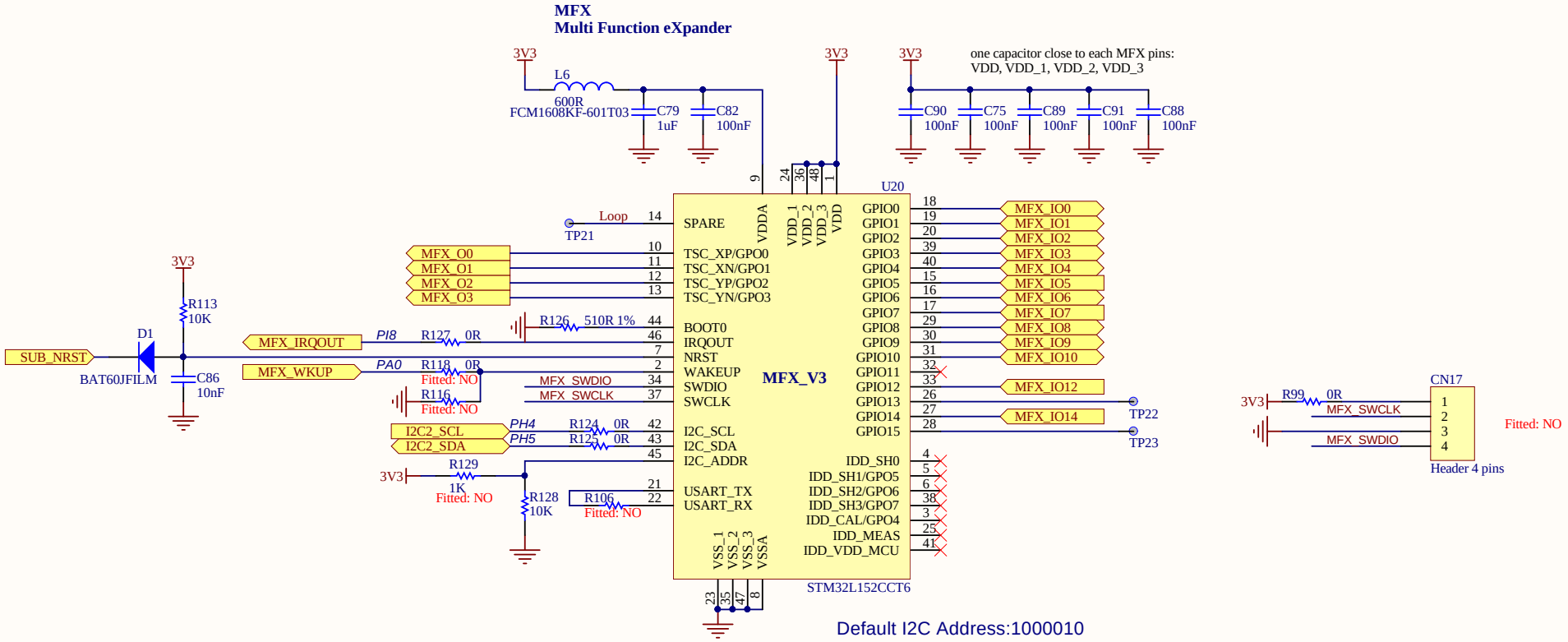

Title: **MFX**		
Project: **STM32MP15x-EVAL**		
Size: A4	Reference: MB1262	Revision: C-01
Date: 5/18/2018		Sheet: 17 of 17

life.augmented