CAGE NO.	DWG NO.	SH	REV

REVISIONS

ZONE	REV	DESCRIPTION	DATE	APPROVED

test_ADC12b TestBench Schematic

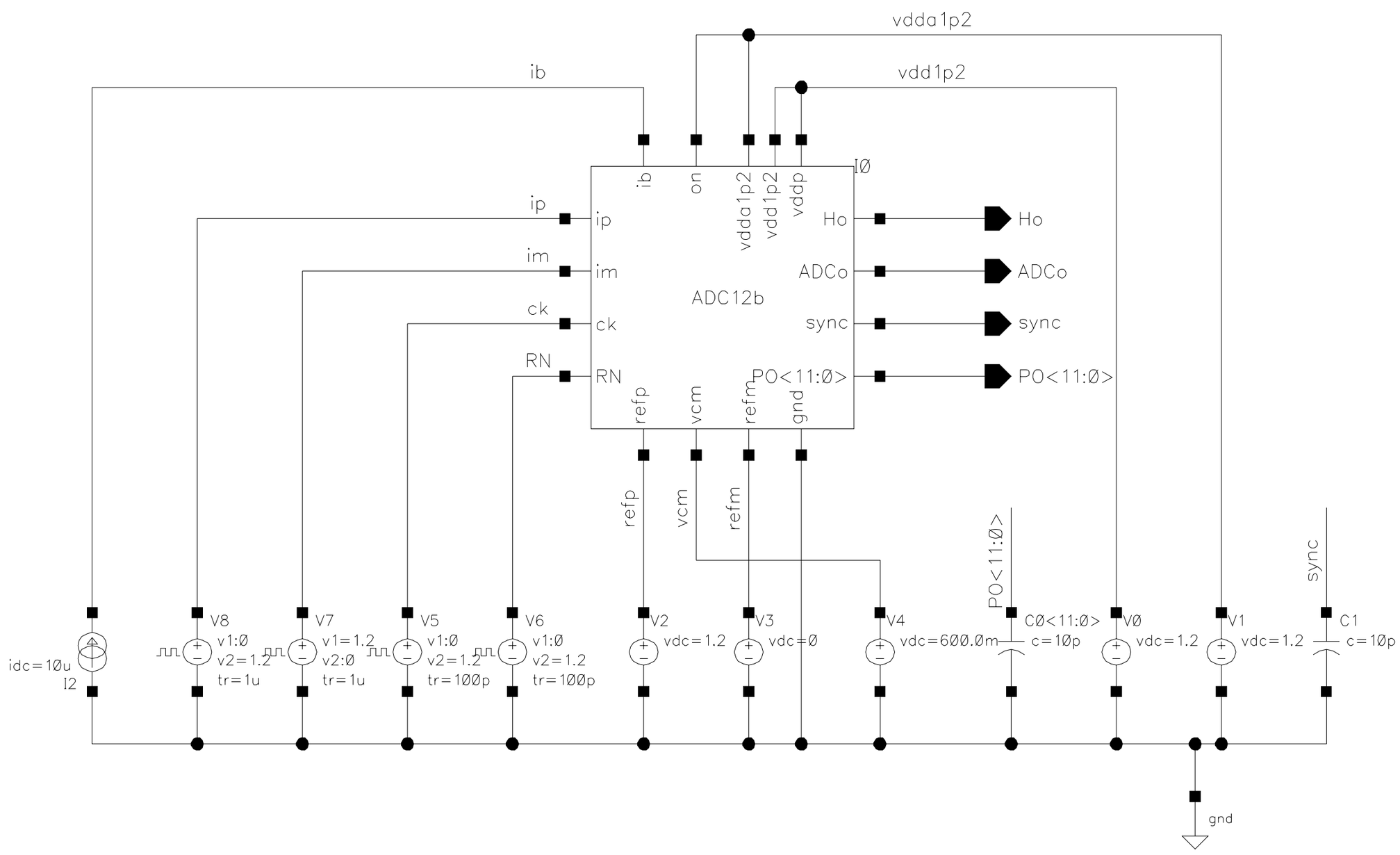

UPDATED Dec 17 08:29:10 2018	test_ADC12b
DRAWN	
CHECKED	
CHECKED	SIZE A · CAGE NO. · DWG NO. · REV
ISSUED	SCALE · SHEET OF