CAGE NO.	DWG NO.	SH	REV

REVISIONS

ZONE	REV	DESCRIPTION	DATE	APPROVED

nor2_1x Schematic

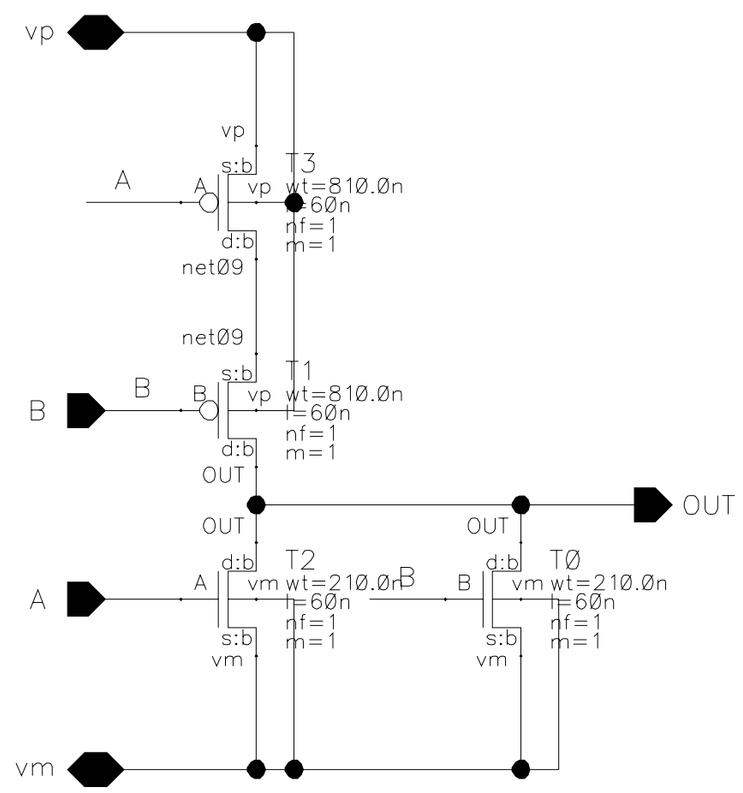

Interchange A and B of pfet gates for LVS

UPDATED Dec 17 08:04:34 2018	nor2_1x			
DRAWN				
CHECKED				
CHECKED	SIZE A	CAGE NO.	DWG NO.	REV
ISSUED	SCALE		SHEET OF	