| CAGE NO. | DWG NO. | SH | REV |
|---|---|---|---|
| | | | |

REVISIONS

| ZONE | REV | DESCRIPTION | DATE | APPROVED |
|---|---|---|---|---|
| | | | | |

# Asynchronous RN sets Q=logic "Ø"
# NEED clock to be HIGH TO hold this value!!

flip I4 sideways to interchange "a" and "b" terminals

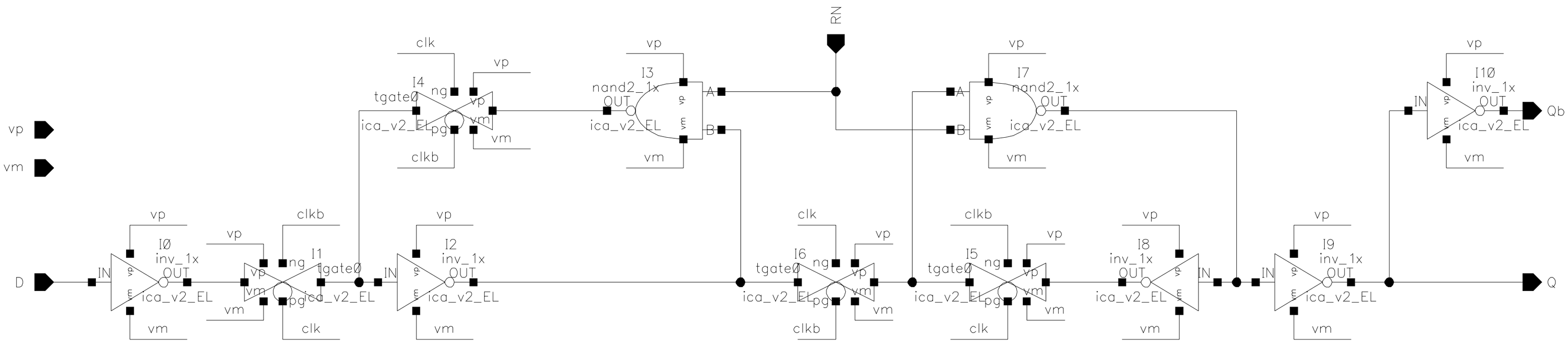


Interchange I5 and I6, then flip each sideways
to interchange "a" and "b" inputs.

| UPDATED | | | |
|---|---|---|---|
| Dec 17 Ø8:Ø2:32 2Ø18 | | | |
| DRAWN | dffr | | |
| CHECKED | | | |
| CHECKED | SIZE A | CAGE NO. | DWG NO. | REV |
| ISSUED | SCALE | | SHEET OF |