CAGE NO.	DWG NO.	SH	REV

REVISIONS

ZONE	REV	DESCRIPTION	DATE	APPROVED

sarc Schematic

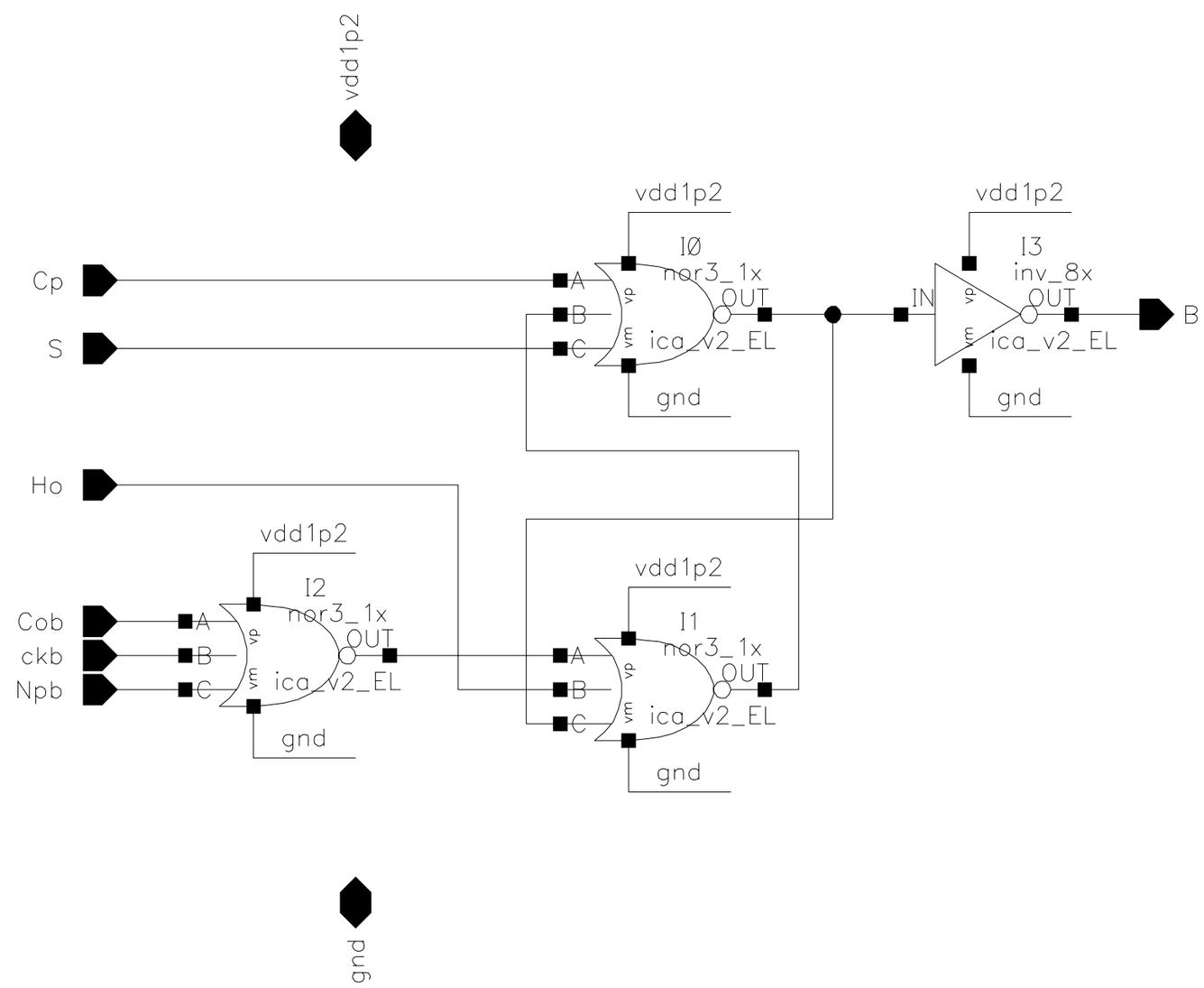

UPDATED	sarc			
Dec 17 08:07:41 2018				
DRAWN				
CHECKED				
CHECKED	SIZE A	CAGE NO.	DWG NO.	REV
ISSUED	SCALE		SHEET OF	