CAGE NO.	DWG NO.	SH	REV

REVISIONS

ZONE	REV	DESCRIPTION	DATE	APPROVED

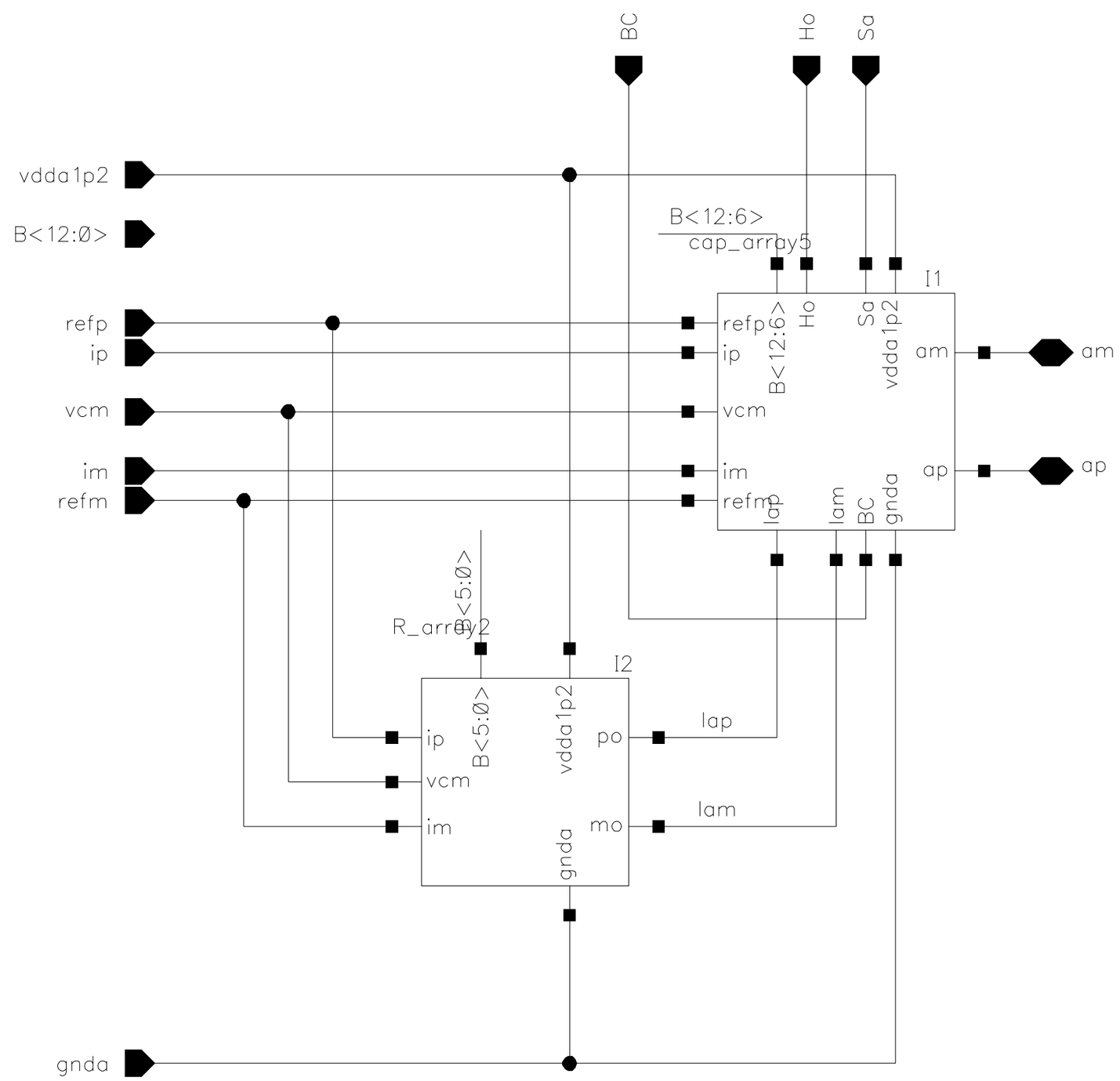

UPDATED Dec 17 07:54:39 2018	DAC_array			
DRAWN				
CHECKED				
CHECKED	SIZE A	CAGE NO.	DWG NO.	REV
ISSUED	SCALE		SHEET OF	