The Sussex Artificial Intelligence Institute, Zhejiang Gongshang University

浙江工商大学萨塞克斯人工智能学院

Wearable Supernumerary Robotic Finger Based on Footgesture Interface

Qigang Xiang

BEng Electrical and Information Engineering

Aims

This project focuses on developing a wearable robotic finger that assists or augments human hand functions. Unlike traditional control methods, it introduces an innovative foot gesture interface using force-sensitive resistors (FSRs), enabling hands-free control of the robotic finger.

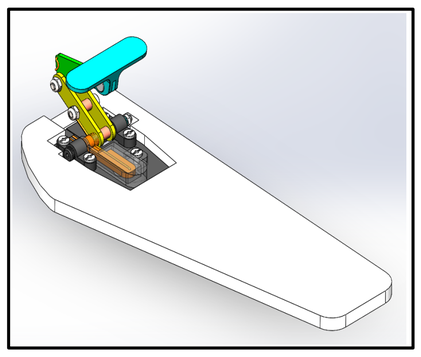

Introduction

With the advancement of wearable robotic technologies, there's growing interest in systems that can enhance human physical capabilities in both industrial and assistive applications. One such system is the supernumerary robotic finger, which extends the dexterity of the human hand without replacing natural fingers. This additional finger can support tasks that require dual-hand coordination, precision manipulation, or load distribution, making it especially useful in multitasking scenarios. This project introduces a new approach: a foot gesture-based control interface for the robotic finger. This allows the robotic finger to be controlled hands-free, giving users greater freedom and improving overall coordination, especially when both hands are engaged.

Methodology

This project adopts a mechanical–electrical integration approach to design and implement a wearable supernumerary robotic finger controlled by foot gestures.

Design of the Foot Gesture Interface

A custom mechanical foot pedal is designed to detect subtle foot gestures through pressure application. As shown in the figure, the structure includes: A pivoting pedal mounted on a hinge joint; A compression mechanism that transfers vertical force into measurable displacements; A force-sensitive resistor (FSR) or similar pressure sensor embedded beneath the pedal, directly in contact with the actuator surface.

Sensor Integration and Signal Acquisition

An FSR sensor is placed below the movable pedal structure to capture pressure changes during foot movement. Project use a voltage divider circuit, and the analog signal from FSR is sampled via an analog-to-digital converter (ADC) from ardiuno uno.

Robotic Finger Actuation

The system varies pressure levels detected by the foot interface correspond to specific robotic finger actions. Light or zero pressure is mapped to a “close" command, since there is a spring connected between the finger and joint which make sure the robotic finger can stay close in a usual stage. Medium pressure initiates a "hold" and strong pressure triggers a “open“ action. Once the pressure input is classified, the corresponding command is transmitted to the robotic finger actuator, which carries out the movement through RC servo motors(SG90), depending on the design configuration.

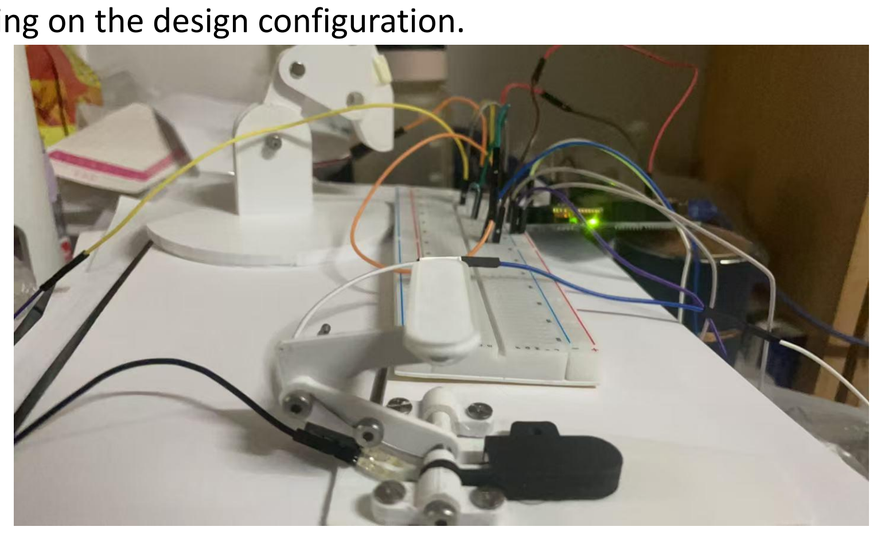

Results

Control the relaxation and gripping of additional robotic fingers through toe movements, diastole or contraction. Which means, without an assistant, by foot gesture control, a person may achieve some operations that needs more than one people on his own. Moreover, while not the fastest method, the foot-gesture control offers a good balance of accuracy and hands-free usability, making it highly suitable for augmentative and assistive applications. Compared to EMG interface, foot gesture interface has fewer noise and easier to manipulate.

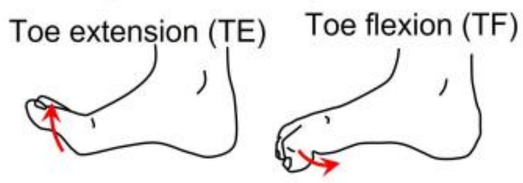

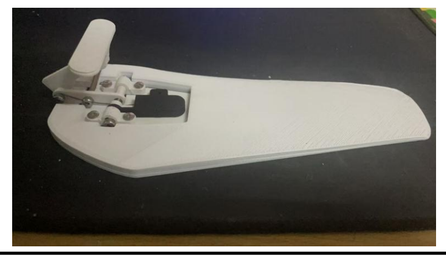

Foot Gesture	FSR Value Range	Interpreted Action
No pressure	0–5N	Hold finger
Strong press	5N+	Open finger

Conclusions

This project successfully designed and built a wearable supernumerary robotic finger controlled through foot gestures. By placing force-sensitive resistors (FSRs) under the foot, the system could recognize different levels of pressure and map them to specific finger actions, such as opening, holding, or closing. This allowed for hands-free control, which is especially useful when both hands are occupied or in need of assistance. Testing showed that the system responded reliably to input, with a low control delay—meeting the requirements for real-time response. Compared to traditional methods like EMG or button control, the foot gesture interface was found to be simpler, more intuitive, and easier to use, without interfering with hand movement. The lightweight and modular design also ensures comfort and makes it easier to upgrade or expand in the future. Overall, this project provides a practical and accessible solution for controlling robotic assistance devices and offers a promising direction for hands-free human-machine interaction, especially in assistive and multitasking environments.

References/Acknowledgements

[1] Hussain, I., Spagnoletti, G., Salvietti, G., & Prattichizzo, D. (2016). An EMG interface for the control of motion and compliance of a supernumerary robotic finger. Frontiers in neurorobotics, 10, 18.

[2] Loskutova, A., Roozbahani, D., Alizadeh, M. et al. Design and Development of a Robust Control Platform for a 3-Finger Robotic Gripper Using EMG-Derived Hand Muscle Signals in NI LabVIEW. J Intell Robot Syst 110, 133 (2024). https://doi.org/10.1007/s10846-024-02160-w

[3] Lee, Y., Kim, M., Lee, Y., Kwon, J., Park, Y. L., & Lee, D. (2018). Wearable finger tracking and cutaneous haptic interface with soft sensors for multi-fingered virtual manipulation. IEEE/Asme Transactions on Mechatronics, 24(1), 67-77.

[4] Hartcher-O'Brien, J., Mehta, V., Colonnese, N., Gupta, A., Bruns, C. J., & Agarwal, P. (2023, July). Fingertip wearable high-resolution electrohydraulic interface for multimodal haptics. In 2023 IEEE World Haptics Conference (WHC) (pp. 299-305). IEEE.

[5] Cheng, Y., Huang, Y., Wang, Z., & Burdet, E. (2023, May). Foot gestures to control the grasping of a surgical robot. In 2023 IEEE International Conference on Robotics and Automation (ICRA) (pp. 6844-6850). IEEE.

[6] Kaya, B. (2024, June). I tried out a robotic third thumb — and felt like I had superpowers. Retrieved from: https://www.thetimes.com/uk/science/article/can-a-third-thumb-make-me-the-first-robotically-enhanced-reporter-bvqnrtbqn?utm_source=chatgpt.com&region=global