PAGE	DESCRIPTION	NOTE
1	01_COVER SHEET	
2	02_BLOCK DIAGRAM	
3	03_POWER DIAGRAM	
4	04_CLOCK DIAGRAM	
5	05_LS_DDR	
6	06_LS_PCIE	
7	07_LS_DVO	
8	08_LS_GMAC_SATA_USB	
9	09_LS_HDA_NAND_CAN_JTAG	
10	10_LS_SYS_SPI_I2C_UART_ACPI_PWM	
11	11_LS_2K1000_POWER	
12	12_POWER	
13	13_DDR	
14	14_PCIE	
15	15_RGB_HDMI	
16	16_USB	
17	17_GPIO_CAN_UART_JTAG	
18	18_CLK_FLASH_EEPROM	
19	19_HDA_JACK	
20	20_ETH	
21	21_BEEP	
22	22_RESET	
23	23_EMMC	
24	24_TF	

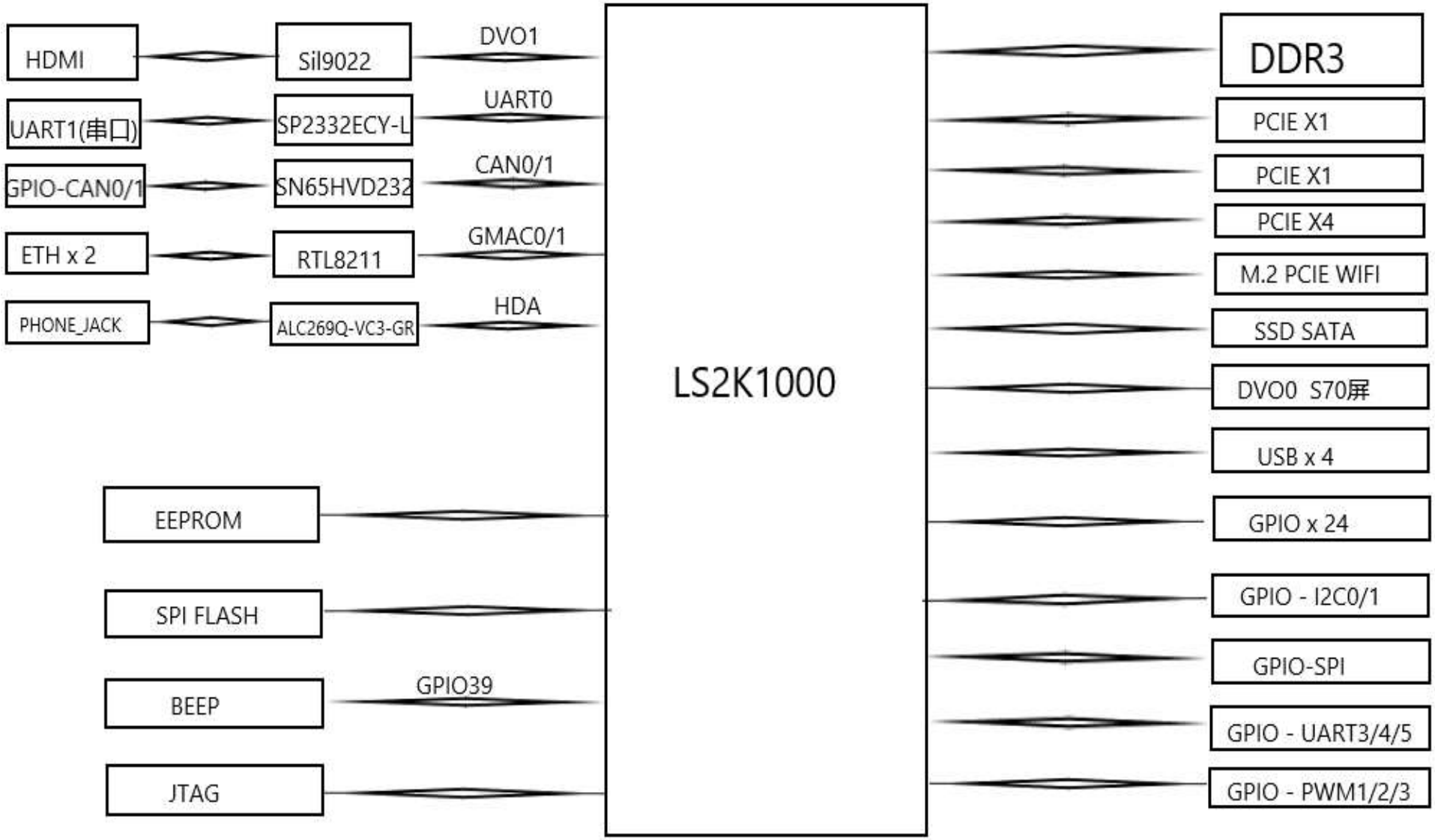

米联客 MILIANKE

www.milianke.com

LS01_2K1000

ProjectName: <Doc>			
Size: A	Page Title: 02_BLOCK DIAGRAM	Rev:	<RevCode>
Date: Wednesday, October 25, 2023	Sheet 02 of 24		

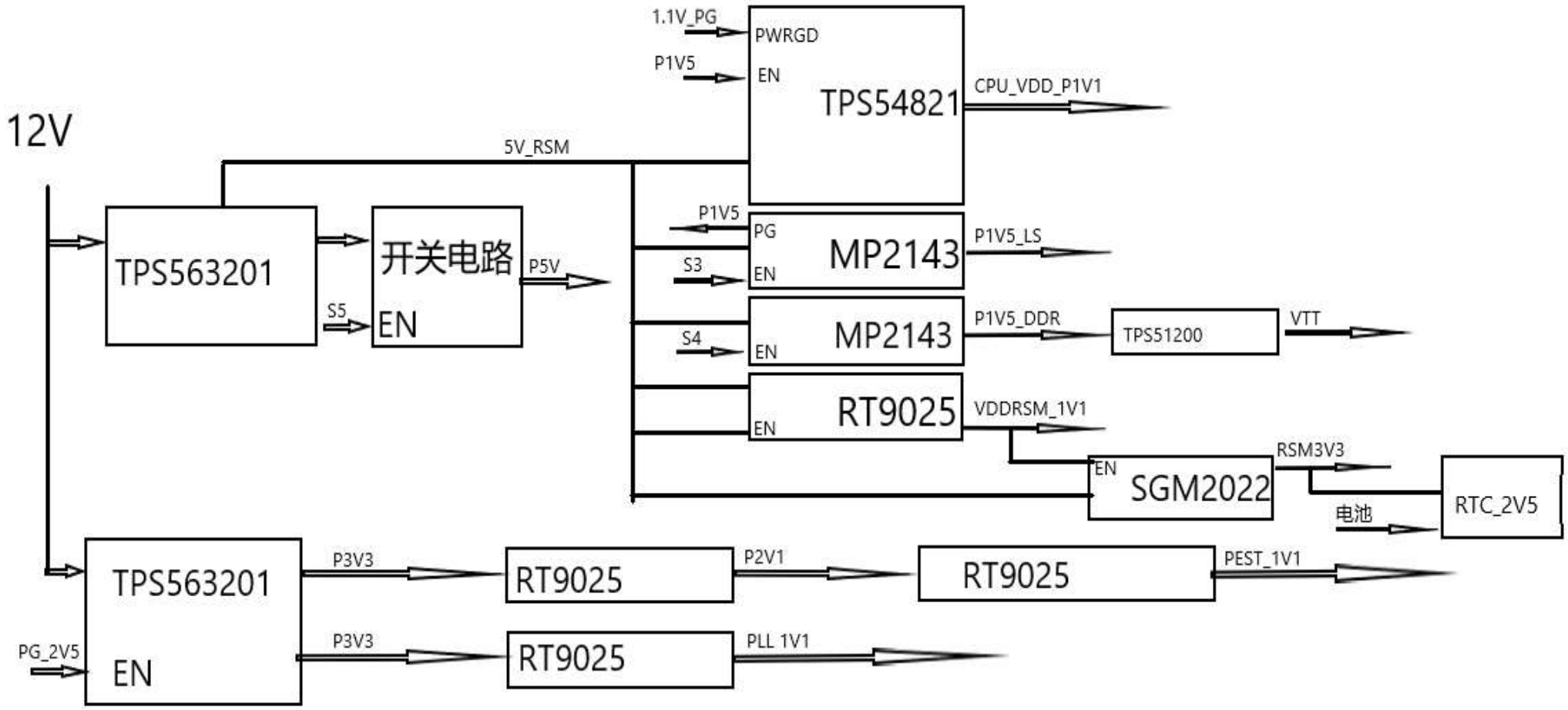

米联客 MILIANKE

www.milianke.com

LS01_2K1000

ProjectName: <Doc>			
Size: A	Page Title: 03_POWER DIAGRAM	Rev:	<RevCode>
Date: Wednesday, October 25, 2023	Sheet 03 of 24		

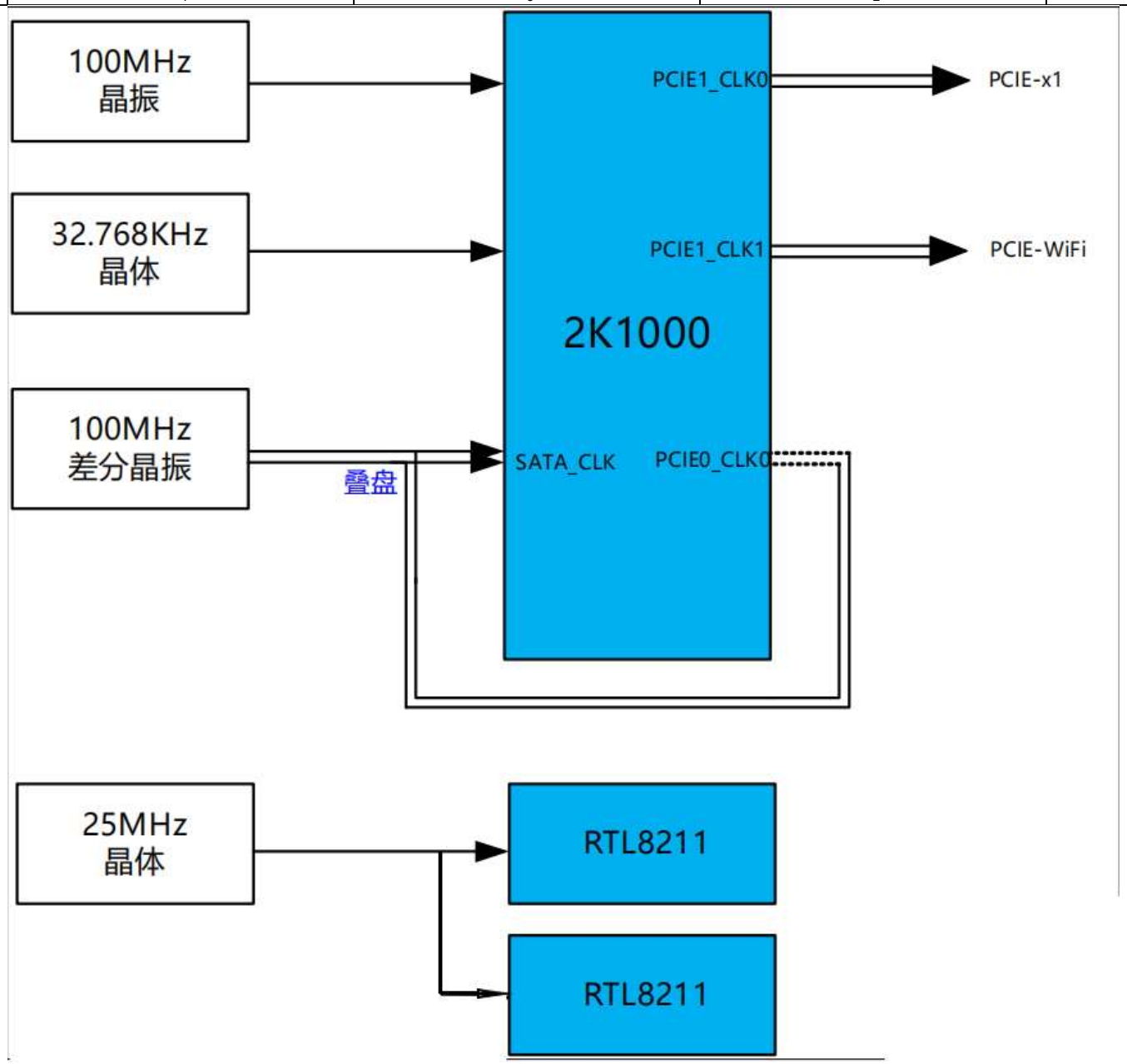

米联客 MILIANKE

www.milianke.com

LS01_2K1000

ProjectName: <Doc>			
Size: A	Page Title: 04_CLOCK DIAGRAM	Rev:	<RevCode>
Date: Wednesday, October 25, 2023	Sheet 04 of 24		

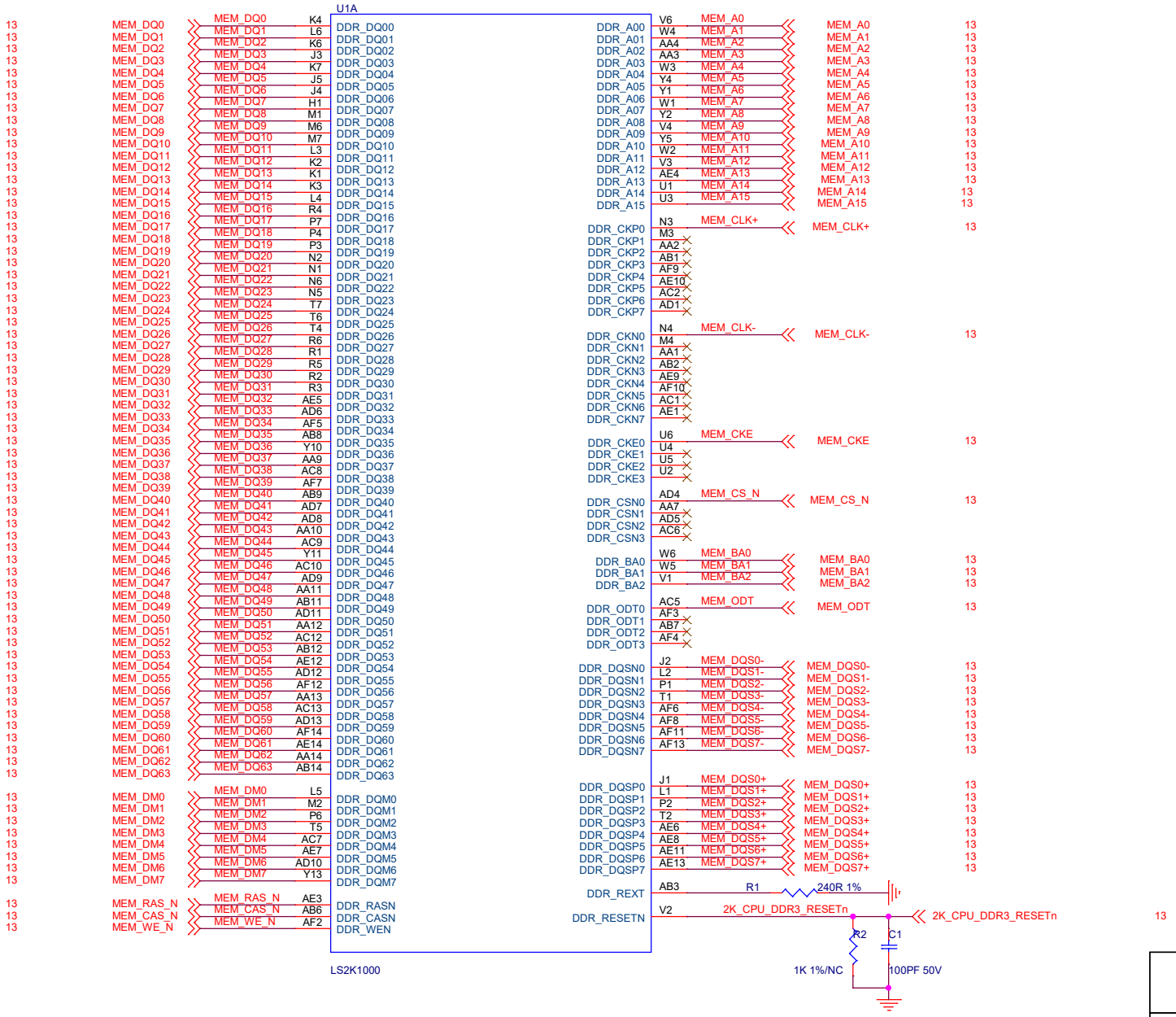

米联客 MILIANKE

www.milianke.com

LS01_2K1000

ProjectName:	<Doc>		
Size: B	Page Title: 05_LS_DDR	Rev:	<RevCode>
Date: Wednesday, October 25, 2023		Sheet 05	of 24

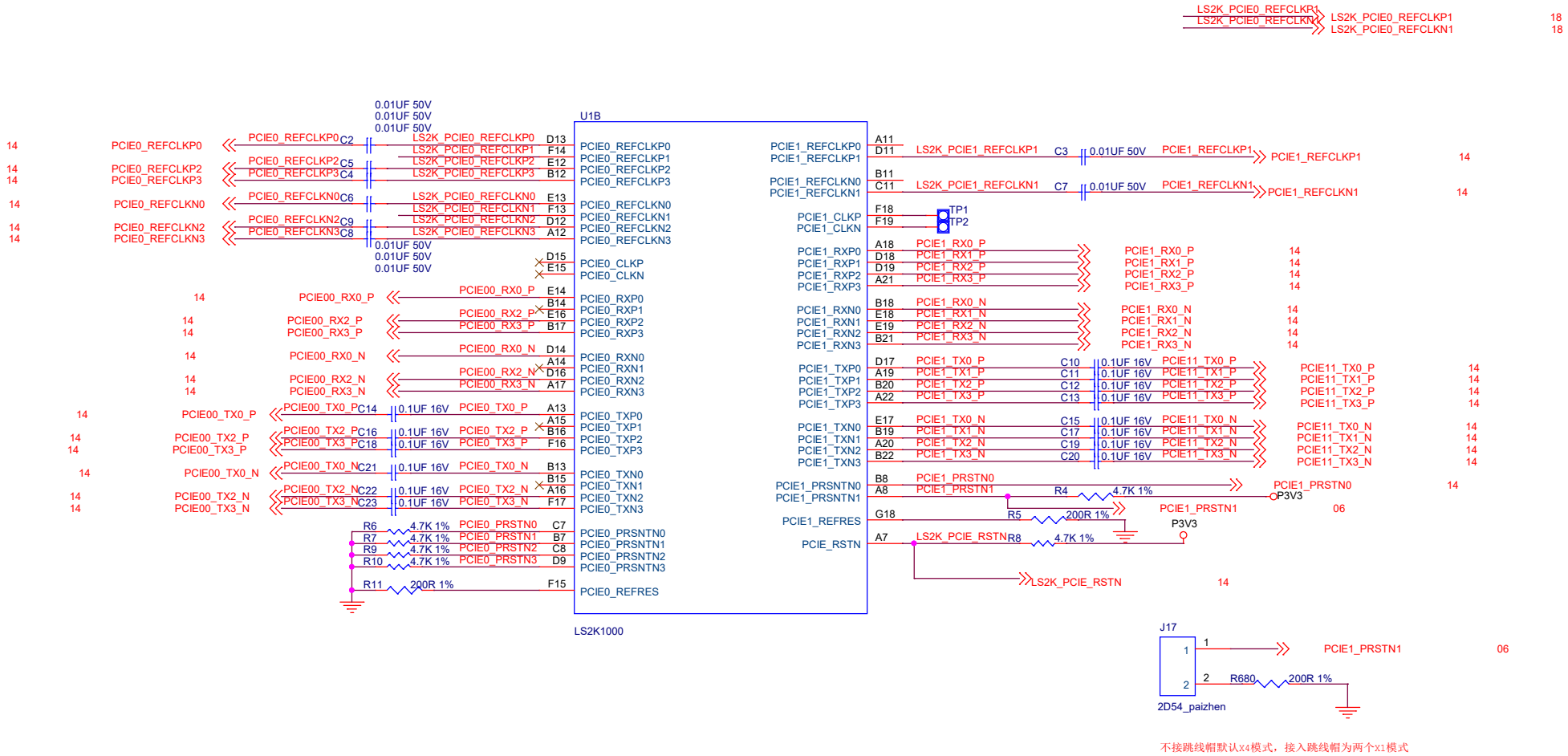

米联客 MILIANKE

www.milianke.com LS01_2K1000

ProjectName: <Doc>			
Size: B	Page Title: 06_LS_PCIE	Rev:	<RevCode>
Date: Wednesday, October 25, 2023	Sheet 06 of 24		

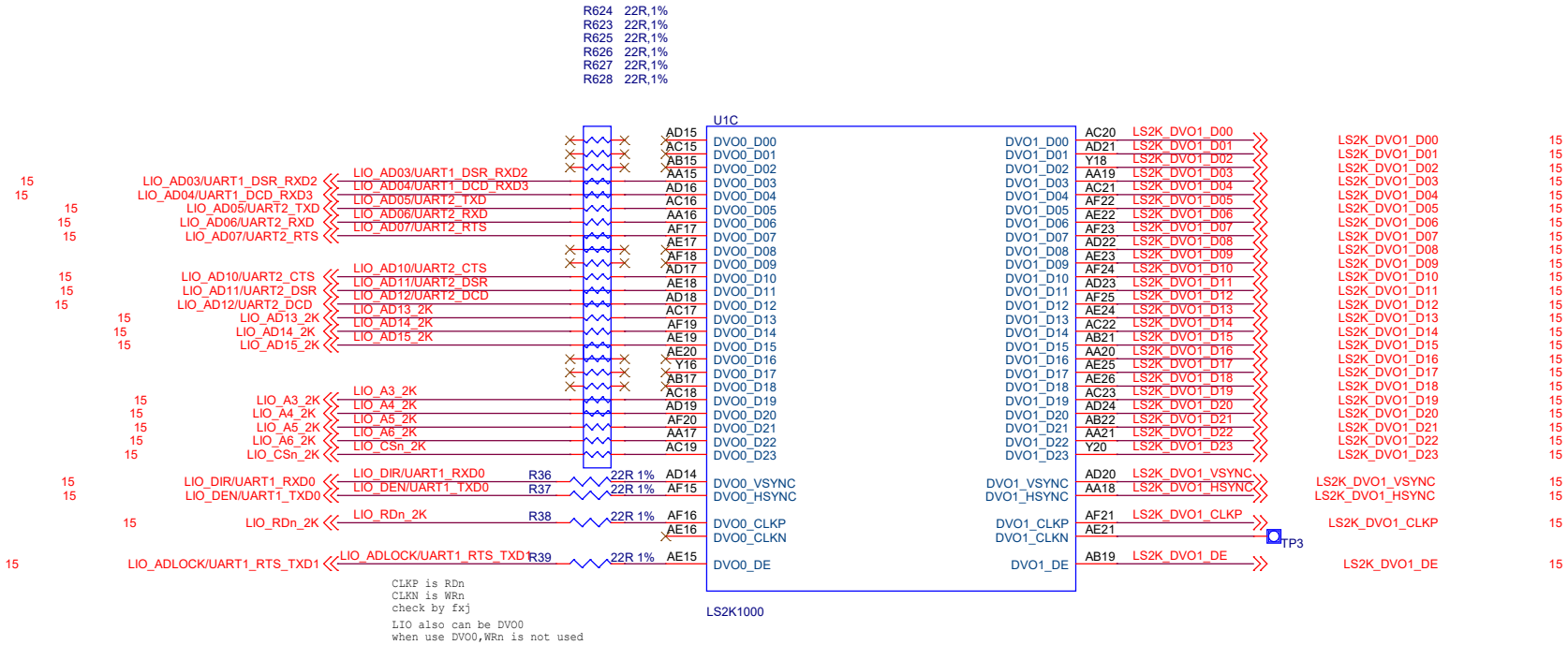

米联客 MILIANKE

www.milianke.com

LS01_2K1000

ProjectName: <Doc>			
Size: B	Page Title: 07_LS_DVO	Rev:	<RevCode>
Date: Wednesday, October 25, 2023		Sheet 07 of 24	

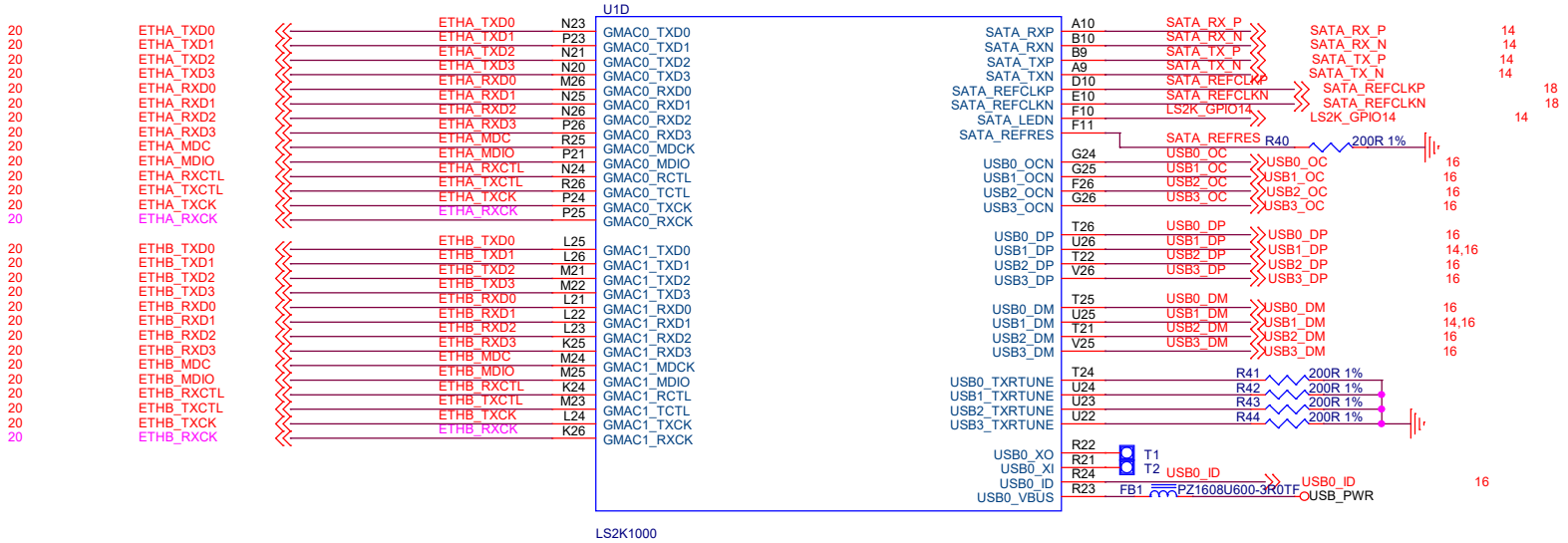

米联客 MILIANKE

www.milianke.com LS01_2K1000

ProjectName: <Doc>			
Size: B	Page Title: 08_LS_GMAC_SATA_USB	Rev:	<RevCode>
Date: Wednesday, October 25, 2023	Sheet 08 of 24		

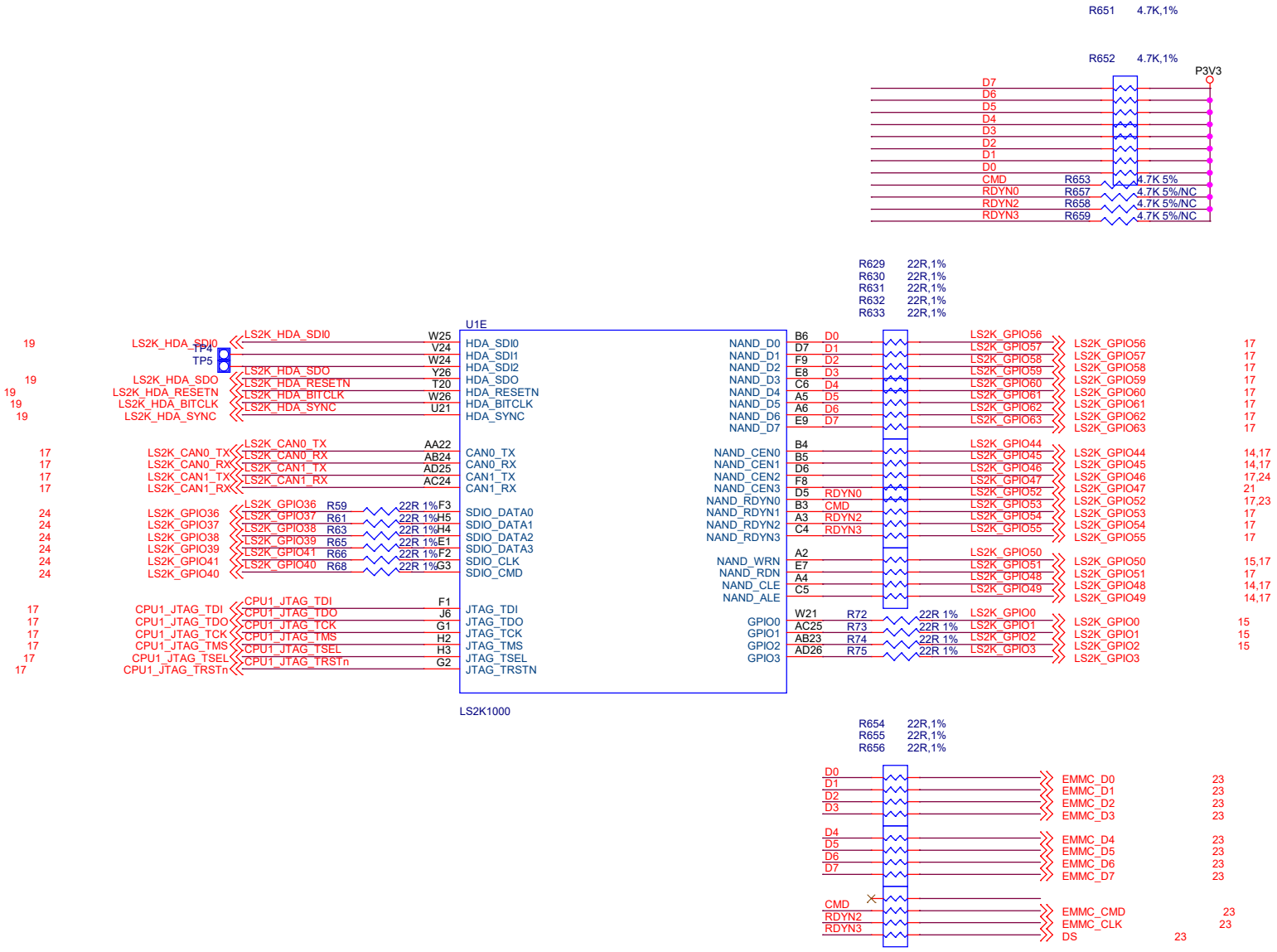

米联客 MILIANKE

www.milianke.com LS01_2K1000

ProjectName: <Doc>			
Size: B	Page Title: 09_LS_HDA_NAND_CAN_JTAG	Rev:	<RevCode>
Date: Wednesday, October 25, 2023	Sheet 09 of 24		

米联客 MILIANKE

www.milianke.com

LS01_2K1000

ProjectName:	<Doc>
Size: C	Page Title: 10 LS_SYS_SPI_I2C_UART_ACI_PWM
Date: Wednesday, October 25, 2023	Sheet 10 of 24

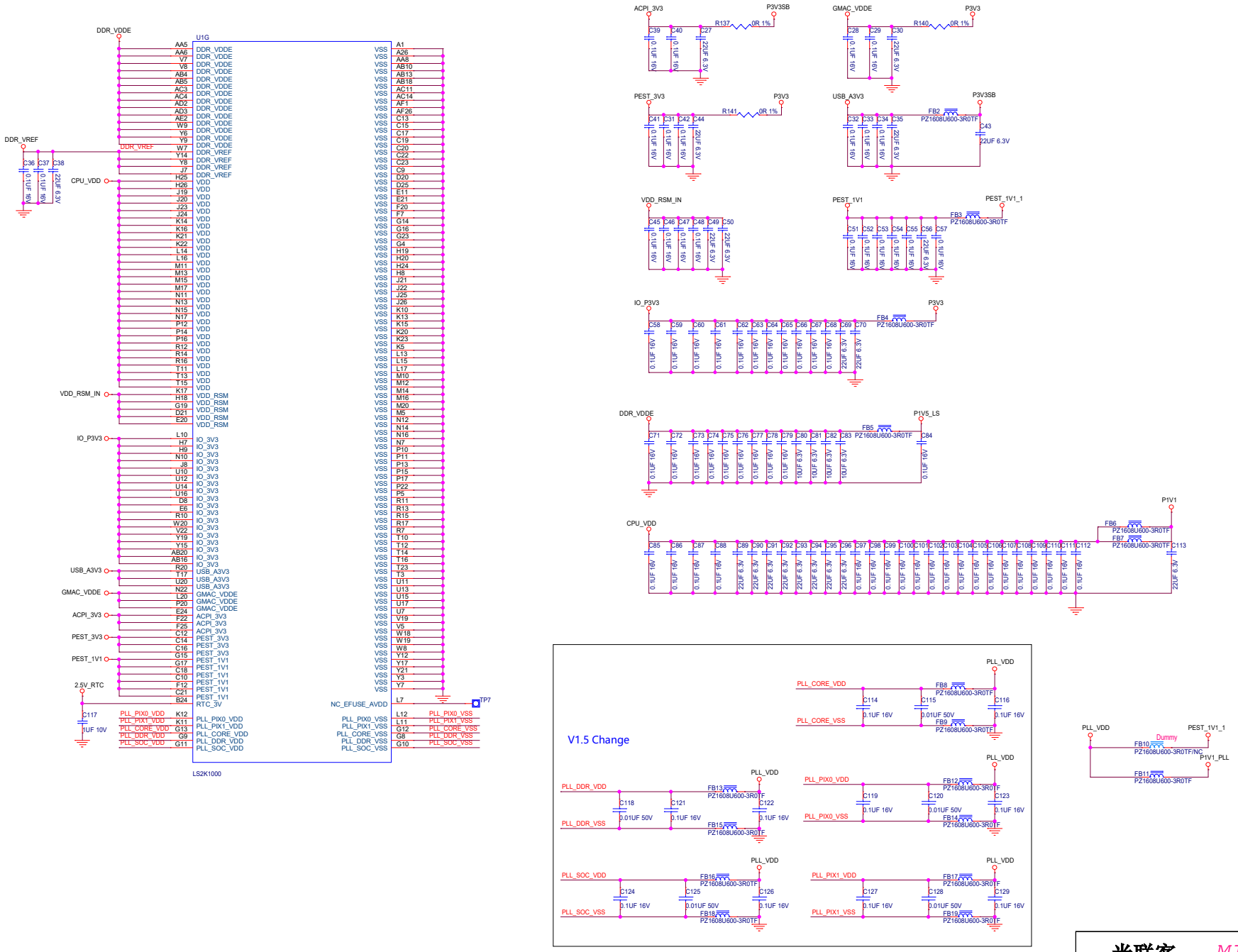

米联客 MILIANKE

www.milianke.com

LS01_2K1000

ProjectName:	<Doc>		
Size: C	Page Title: 11 LS_2K1000_POWER	Rev:	<RevCode>
Date: Wednesday, October 25, 2023	Sheet 11 of 24		

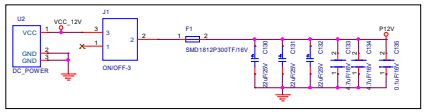

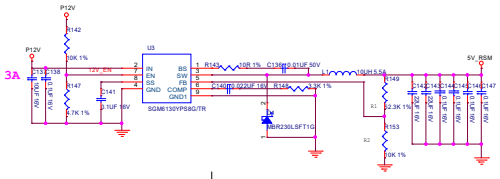

Vout=0.8*(R1+R2)/R2

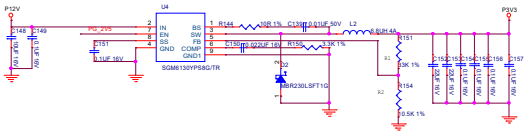

Vout=0.8*(R1+R2)/R2

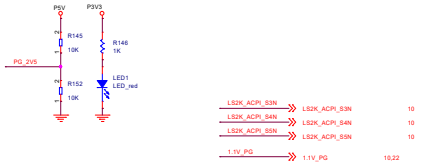

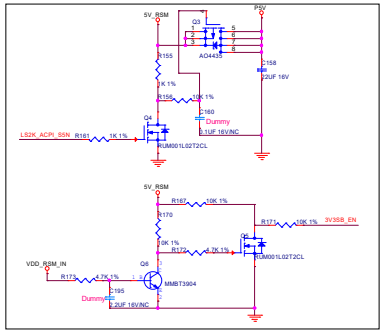

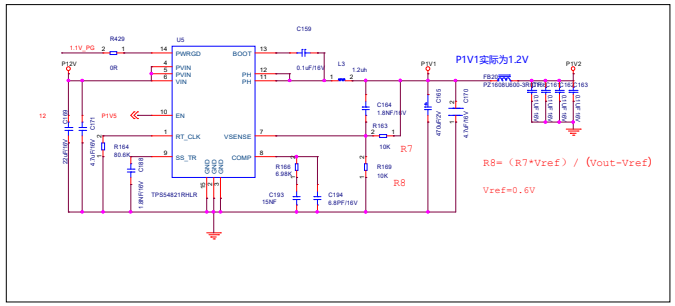

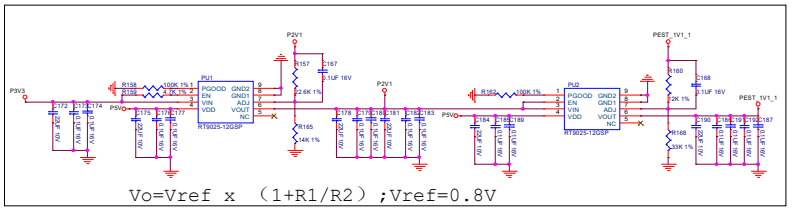

Vo=Vref x （1+R1/R2）;Vref=0.8V

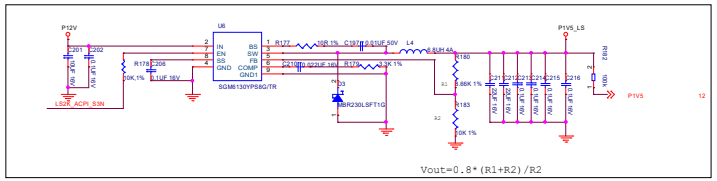

Vout=0.8*(R1+R2)/R2

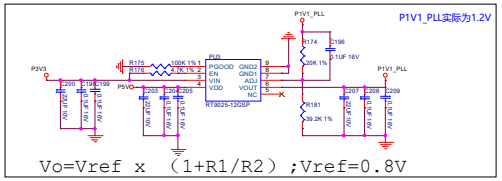

Vo=Vref x （1+R1/R2）;Vref=0.8V

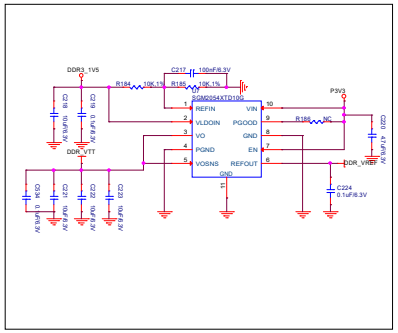

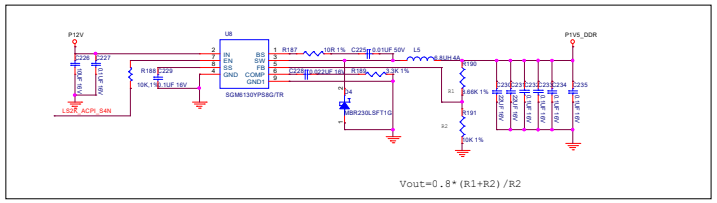

Vout=0.8*(R1+R2)/R2

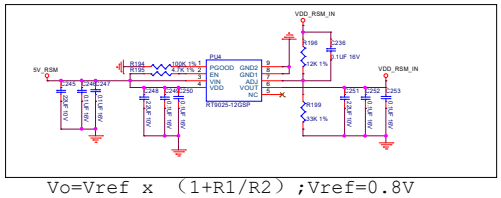

Vo=Vref x （1+R1/R2）;Vref=0.8V

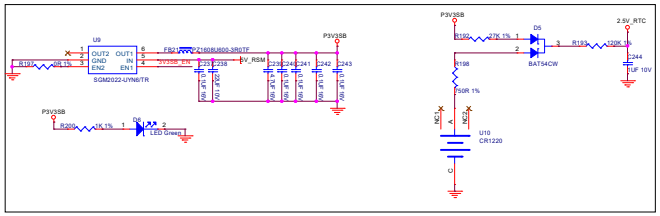

12V ——— 5V_RSM ——┬— 开关电路(P5V) — P1V5_LS ——— P1V1 ——— P1V5_DDR ——— DDR_VTT
└— VDD_RSM_IN ——— P3V3SB

开关电路(P5V)——— P3V3 ——— P2V1 ——— PEST_1V1_1
└— P1V1_PLL

其中(P5V)、P1V5_LS、P1V5_DDR由处理器控制使能

米联客 MILINAKE
www.milianke.com LS03_2R1000

Project Name:	POWER		
Size:	A	Page Title:	12_POWER
Date:	Wednesday, October 25, 2023	Sheet	12 of 24
Rev:	<Rev Code>		

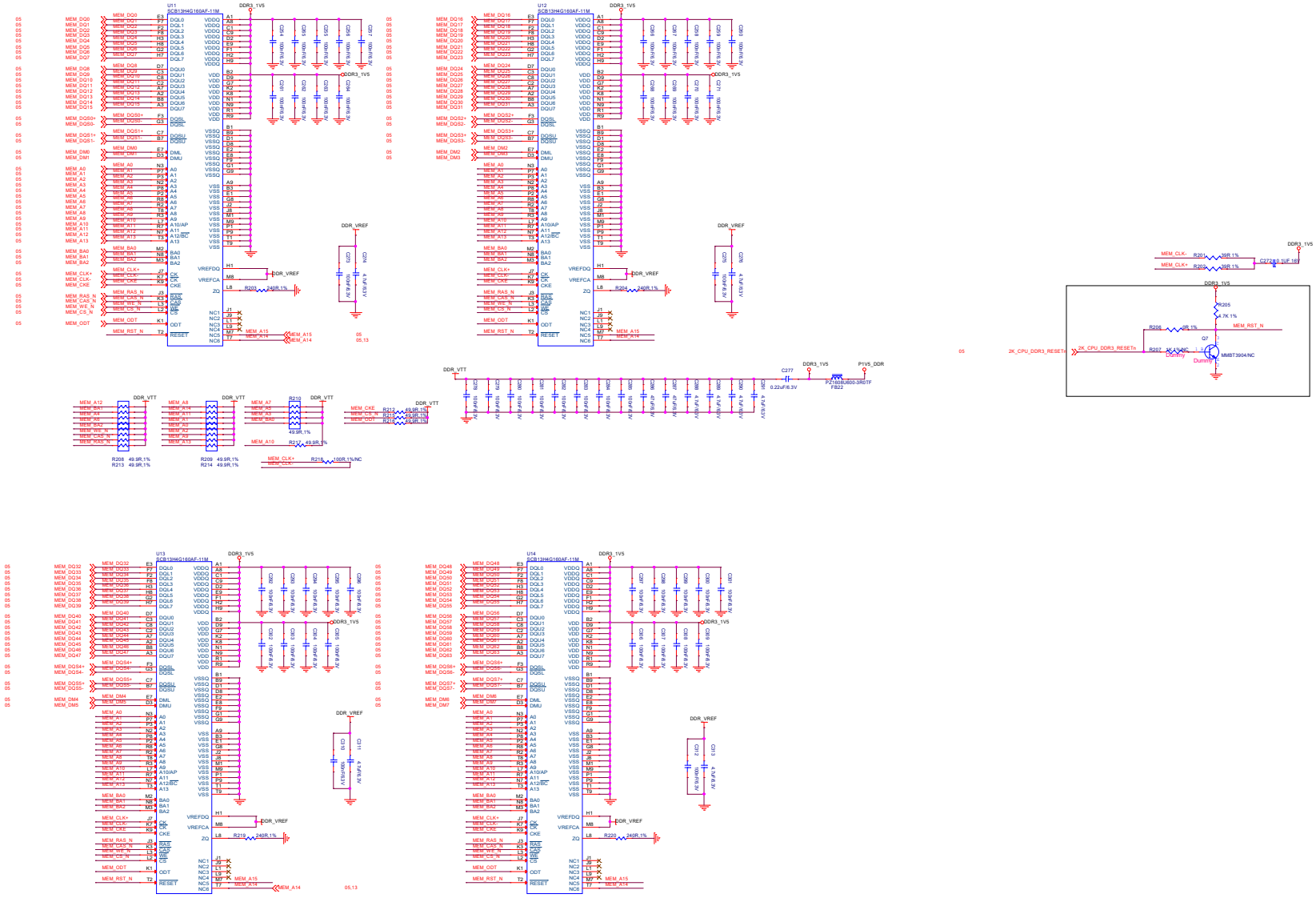
U11
SCB13HG160AF-11M
U12
SCB13HG160AF-11M
U13
SCB13HG160AF-11M
U14
SCB13HG160AF-11M
DDR3_1V5
DDR_VREF
DDR_VTT
P1V5_DDR
2K_CPU_DDR3_RESETn
MMBT3904/NC
MEM_RST_N
MEM_CLK-
MEM_CLK+
R203 240R,1%
R204 240R,1%
R219 240R,1%
R220 240R,1%
R208 49.9R,1%
R213 49.9R,1%
R209 49.9R,1%
R214 49.9R,1%
R210 49.9R,1%
R212 49.9R,1%
R215 100R,1%/NC
R201 39R,1%
R202 39R,1%
R205 4.7K,1%
R206 3R,1%
R207 4K,1%/NC
C277 0.22uF/6.3V
C272 47uF/6.3V
C273 47uF/6.3V
C274 4.7uF/6.3V
C275 10uF/6.3V
C276 10uF/6.3V
C312 10u/16.3V
C313 4.7uF/6.3V
C314 4.7uF/6.3V
C315 10uF/6.3V
C316 10uF/6.3V
C317 10uF/6.3V
C318 10uF/6.3V
C319 10uF/6.3V
C320 10uF/6.3V
C321 10uF/6.3V
C322 10uF/6.3V
C323 10uF/6.3V
C324 10uF/6.3V
C325 10uF/6.3V
C326 10uF/6.3V
C327 10uF/6.3V
C328 10uF/6.3V
C329 10uF/6.3V
C330 10uF/6.3V
C331 10uF/6.3V
C332 10uF/6.3V
C333 10uF/6.3V
C334 10uF/6.3V

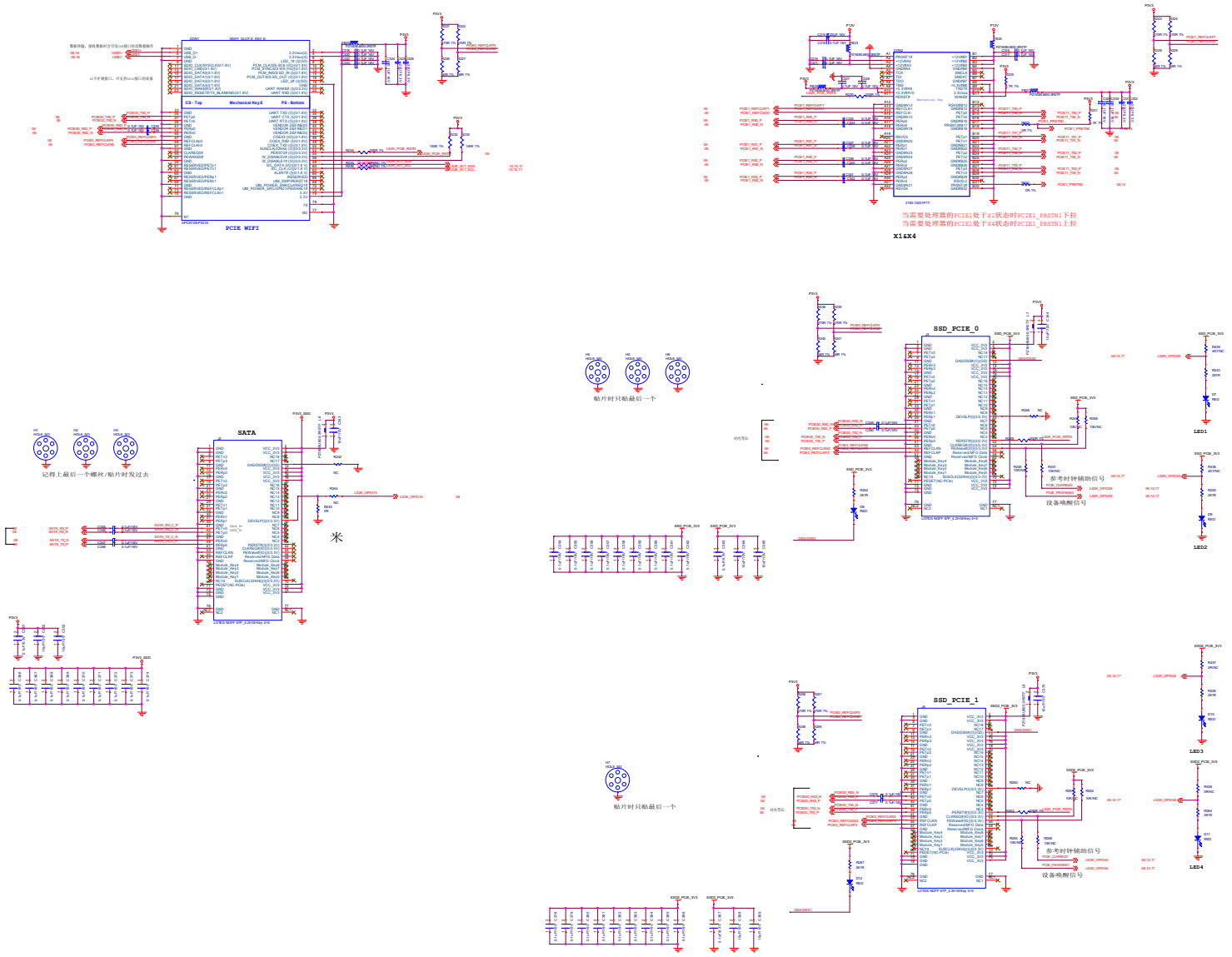

米联客 MILINAKE
www.milianke.com

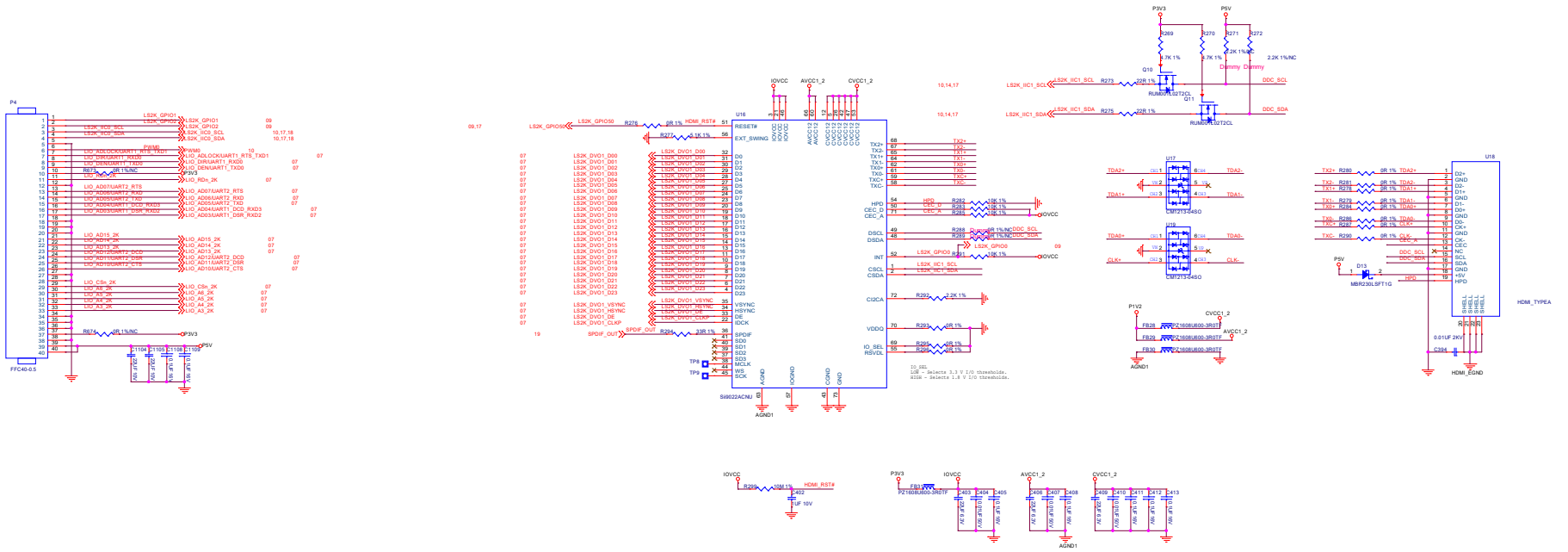

米联客 MILINAKE
www.milianke.com
LS03_2R1000

Project Name:	<Doc>		
Size: D	Page Title: 15 LVDS HDMI	Rev:	<RevCode>
Date: Wednesday, October 25, 2023		Sheet 15 of 24	

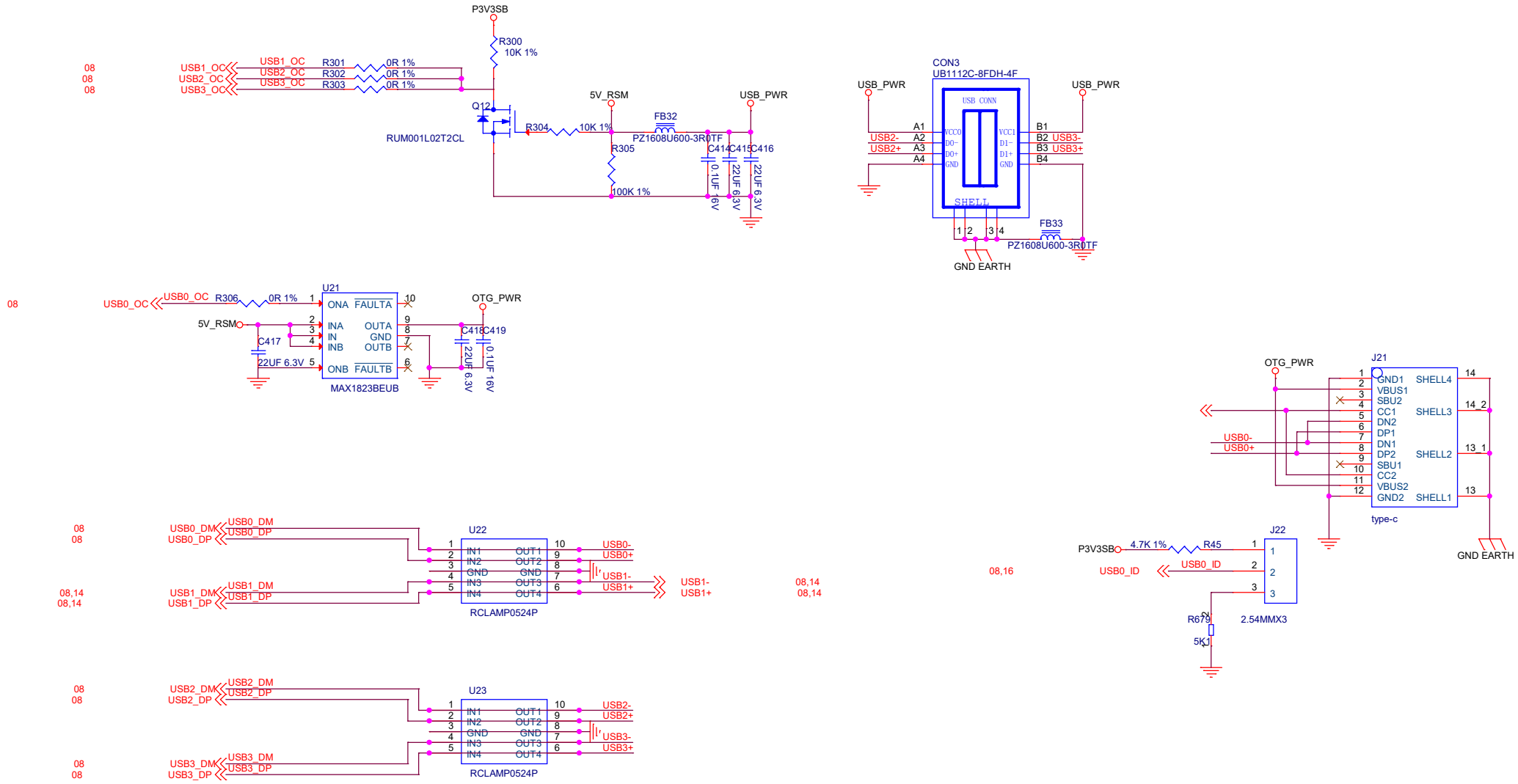

米联客 MILIANKE

www.milianke.com

LS01_2K1000

ProjectName:	<Doc>		
Size: B	Page Title:16_USB	Rev:	<RevCode>
Date: Wednesday, October 25, 2023		Sheet 16	of 24

亚克力固定孔 3.0mm

散热片固定孔 3.0mm

H14 HOLE
H13 HOLE
H16 HOLE
H15 HOLE

H10 HOLE
H9 HOLE
H12 HOLE
H11 HOLE

P3V3
C420 0.1UF 16V
U24 SP3232ECY-L
UART0_TXD
UART0_RXD
TXD0
RXD0
C421 0.1UF 16V
C422 0.1UF 16V
C423 0.1UF 16V
C424 0.1UF 16V
D14 D15 ESD0603-240
D-DMR009PM-D002
UART1
R310 0R 5%
GND_SERIAL

J16 P6E20E-5.0/2.5/3.0-A1/NC
C432 22UF 6.3V
C430 0.1UF 16V
LS2K_IIC0_SCL
LS2K_IIC0_SDA
LS2K_IIC1_SCL
LS2K_IIC1_SDA
PWM1
PWM2
PWM3
LS2K_SPI_CSN1
LS2K_SPI_CSN2
LS2K_SPI_CSN3
LS2K_SPI_SCK
LS2K_SPI_SDI
LS2K_SPI_SDO

J6 P6E30E-5.0/2.5/3.0-A1/NC
C427 22UF 6.3V
C428 0.1UF 16V
C431 22UF 16V
C429 0.1UF 16V
P12V
LS2K_GPIO52
LS2K_GPIO51
LS2K_GPIO50
LS2K_GPIO49
LS2K_GPIO48
LS2K_GPIO47
LS2K_GPIO46
LS2K_GPIO45
LS2K_GPIO44
LS2K_GPIO63
LS2K_GPIO62
LS2K_GPIO61
LS2K_GPIO60
LS2K_GPIO59
LS2K_GPIO58
LS2K_GPIO57
LS2K_GPIO56
LS2K_GPIO55
LS2K_GPIO54
LS2K_GPIO53

U26 SN65HVD232D
C440 0.1UF 16V
LS2K_CAN0_TX
LS2K_CAN0_RX
R312 1K 1%
R315 1K 1%
C438 100PF 50V
C439 100PF 50V
CANH0
CANL0
R317 60.4R 1%
R318 60.4R 1%
C443 4700PF 50V

U25 SN65HVD232D
C436 0.1UF 16V
LS2K_CAN1_TX
LS2K_CAN1_RX
R311 1K 1%
R313 1K 1%
C435 100PF 50V
C437 100PF 50V
CANH1
CANL1
R316 60.4R 1%
R314 60.4R 1%
C442 4700PF 50V

U27 SP3485EN-L/TR
R662 4.7K 1%
UART3_RXD
UART3_TXD
R663 4.7K 1%
Q17 MMBT3904
C441 0.1uF
R666 4.7K
R319 120R
R668 4.7K
485_B0
485_A0
D16 SMBJ6.0CA
D17 SMBJ6.0CA
工作电压：3.135V - 3.465V
工作温度：-40 - +85度
数据速率10Mb/s

U37 SP3485EN-L/TR/NC
R664 4.7K 1%
UART4_RXD
UART4_TXD
R665 4.7K 1%
Q18 MMBT3904
C444 0.1uF
R667 4.7K
R321 120R
R669 4.7K
485_B1
485_A1
D18 SMBJ6.0CA
D19 SMBJ6.0CA
工作电压：3.135V - 3.465V
工作温度：-40 - +85度
数据速率10Mb/s

J9 KF2EDGR-1x9P
232_TXD1
232_RXD1
485_A1
485_B1
485_A0
485_B0

R320 4.7K 1%
CPU1_JTAG_TSEL
CPU1_JTAG_TCK
CPU1_JTAG_TDO
CPU1_JTAG_TMS
CPU1_JTAG_TDI
CPU1_JTAG_TRSTn
U28 RCLAMP0524P
R322 4.7K 1%
R323 4.7K 1%
R324 4.7K 1%
R326 4.7K 1%
R327 4.7K 1%
JT1 JTAG
C445 0.1uF/16V

U36 SP3232ECY-L
C530 0.1UF 16V
UART5_TXD
UART5_RXD
TXD1
RXD1
232_RXD1
232_TXD1
C531 0.1UF 16V
C533 0.1UF 16V
C529 0.1UF 16V
C532 0.1UF 16V
D35 ESD0603-240
D36 ESD0603-240

R325 120R
CANH0
CANL0
D20 SM24CANA-02HTG
ESD抑制器
J10 KF301-3P

R329 120R
CANH1
CANL1
D23 SM24CANA-02HTG
ESD抑制器
J12 KF301-3P

米联客 MILIANKE
www.milianke.com
LS01_2K1000

ProjectName:	<Doc>		
Size: C	Page Title: 17 GPIO CAN UART JTAG	Rev:	<RevCode>
Date: Wednesday, October 25, 2023		Sheet 17	of 24

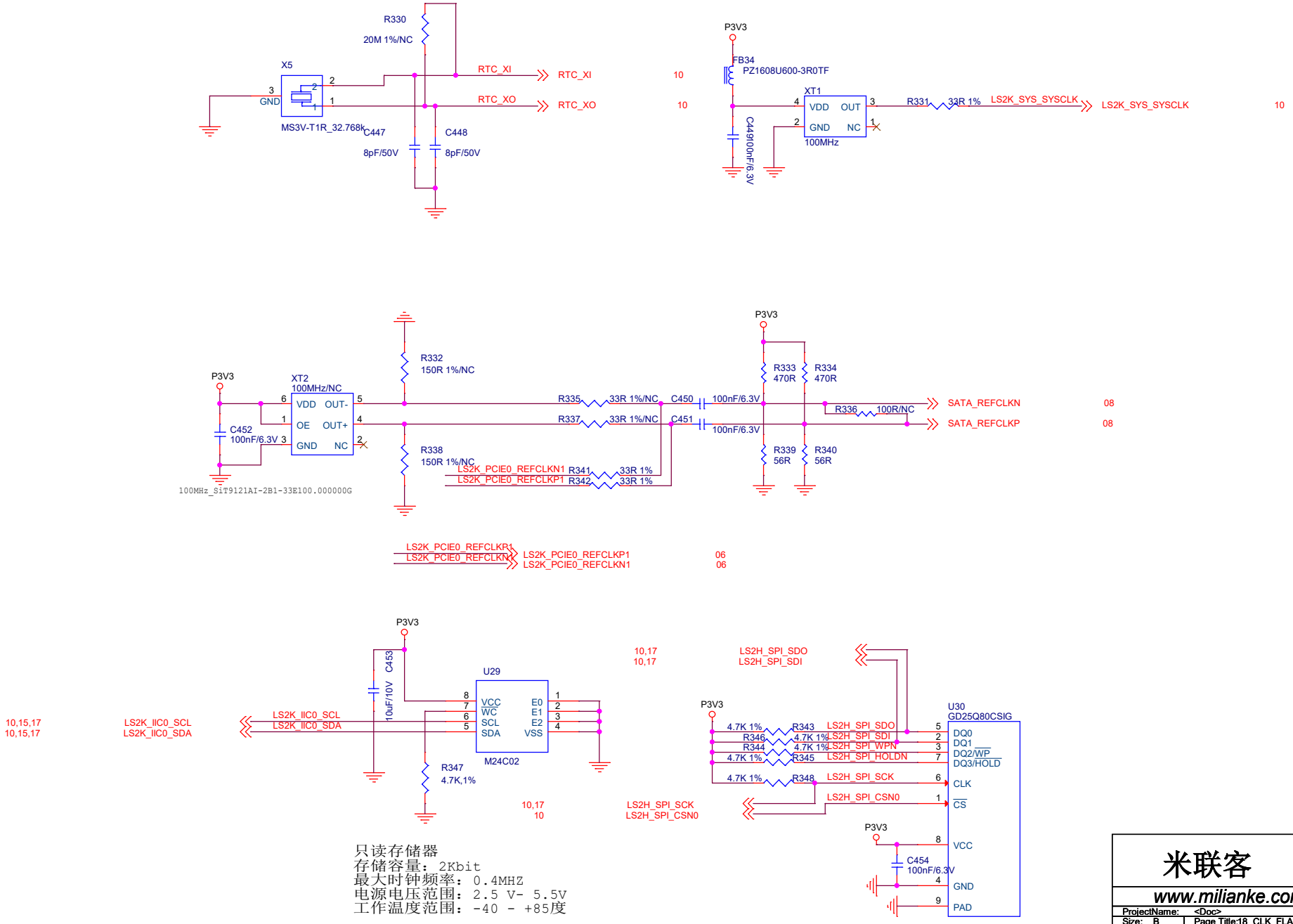

只读存储器
存储容量：2Kbit
最大时钟频率：0.4MHZ
电源电压范围：2.5 V- 5.5V
工作温度范围：-40 - +85度

米联客 MILIANKE
www.milianke.com
LS01_2K1000

ProjectName: <Doc>			
Size: B	Page Title:18_CLK_FLASH_EEPROM	Rev:	<RevCode>
Date: Wednesday, October 25, 2023	Sheet 18 of 24		

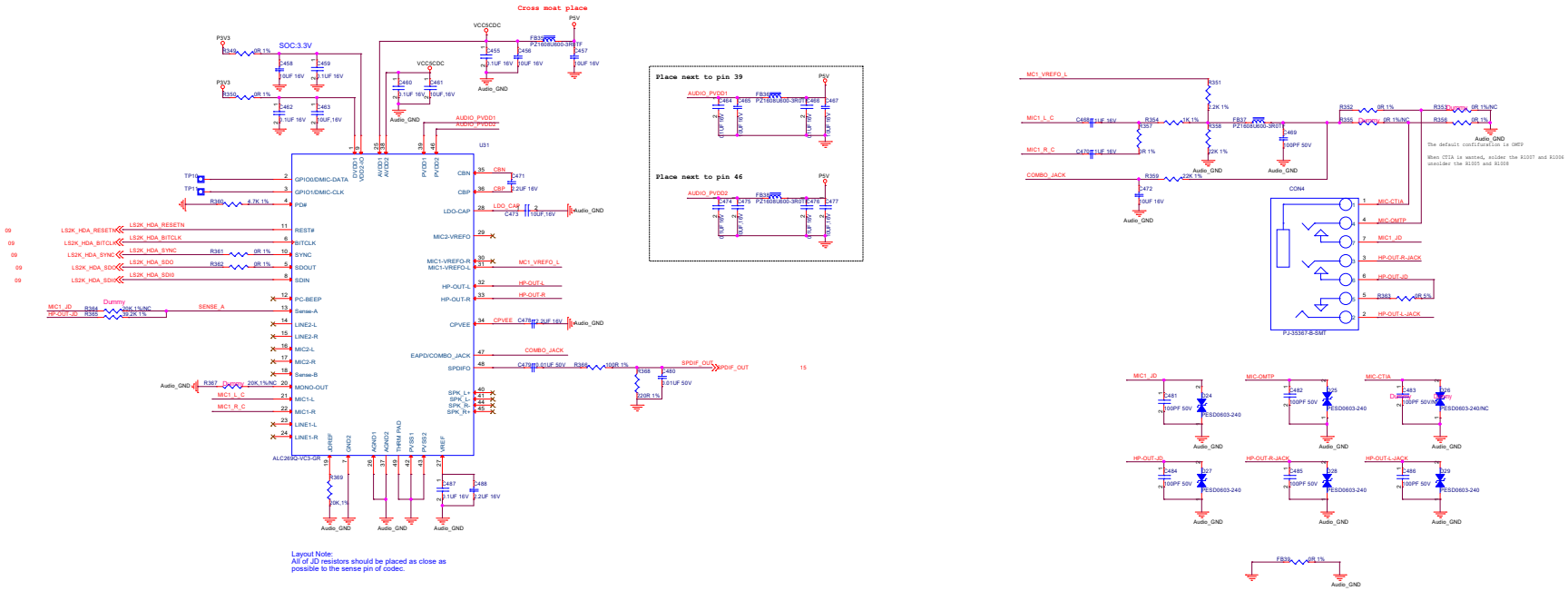

Change the ALC269's outout to HPOUT
Change the MIC's circuit
Dummy the MIC_JD's resistor
Change the HPOUT_JD's resistor to 39.2K

米联客 MILIANKE

www.milianke.com | LS01_2K1000

Project Name:	<Doc>		
Size:	D	Page Title:10_HDA_JACK	Rev: <RevCode>
Date:	Wednesday, October 25, 2023	Sheet 19 of 24	

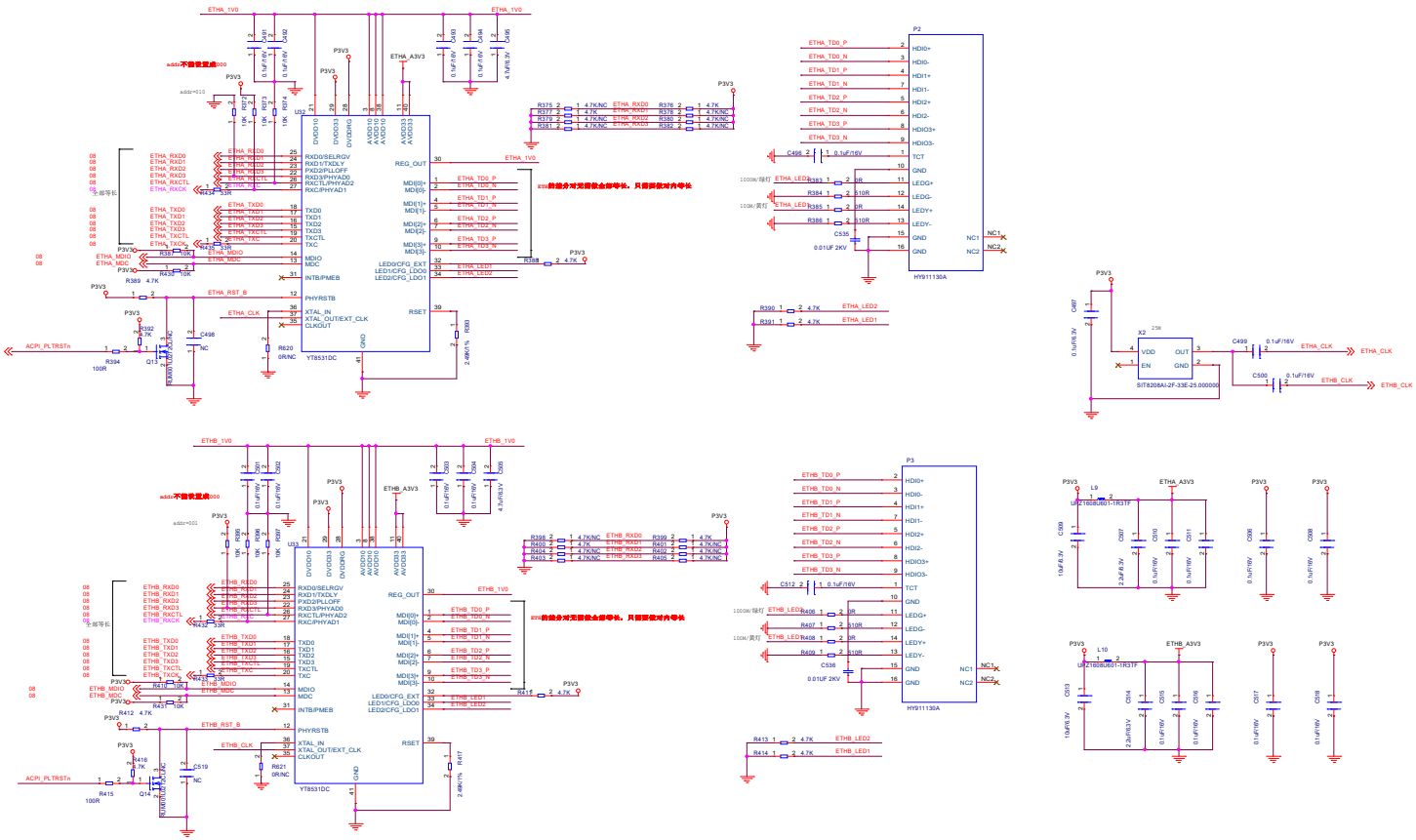

米联客 MILIANKE	
www.milianke.com	LS01_2K1000
Project Name: <Doc>	
Size: B Page Title:20_ETH	Rev: <RevCode>
Date: Wednesday, October 25, 2023 Sheet 20 of 24	

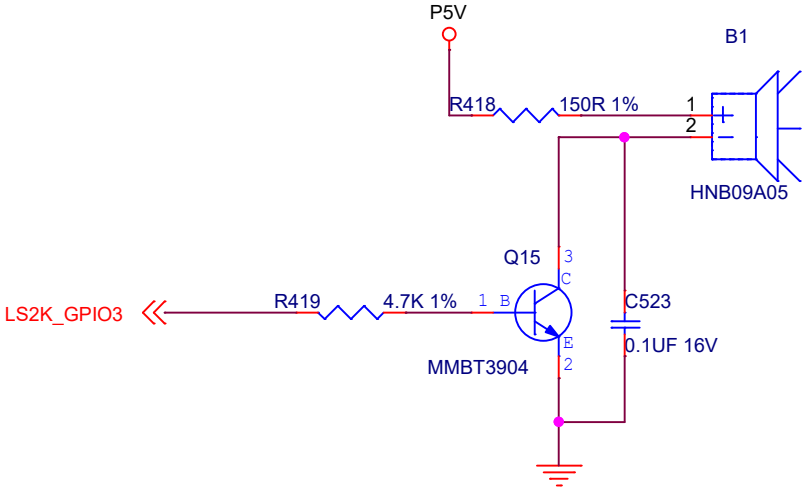

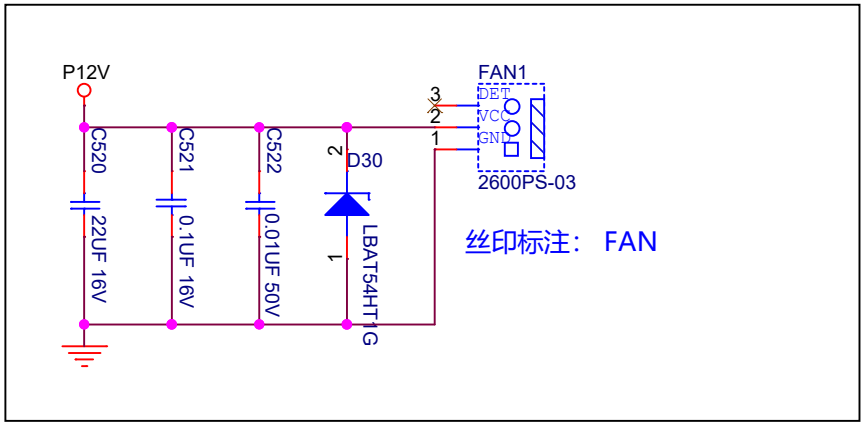

米联客 MILIANKE

www.milianke.com

LS01_2K1000

ProjectName:	<Doc>		
Size: A	Page Title21_BEEP	Rev:	<RevCode>
Date: Wednesday, October 25, 2023		Sheet 21	of 24

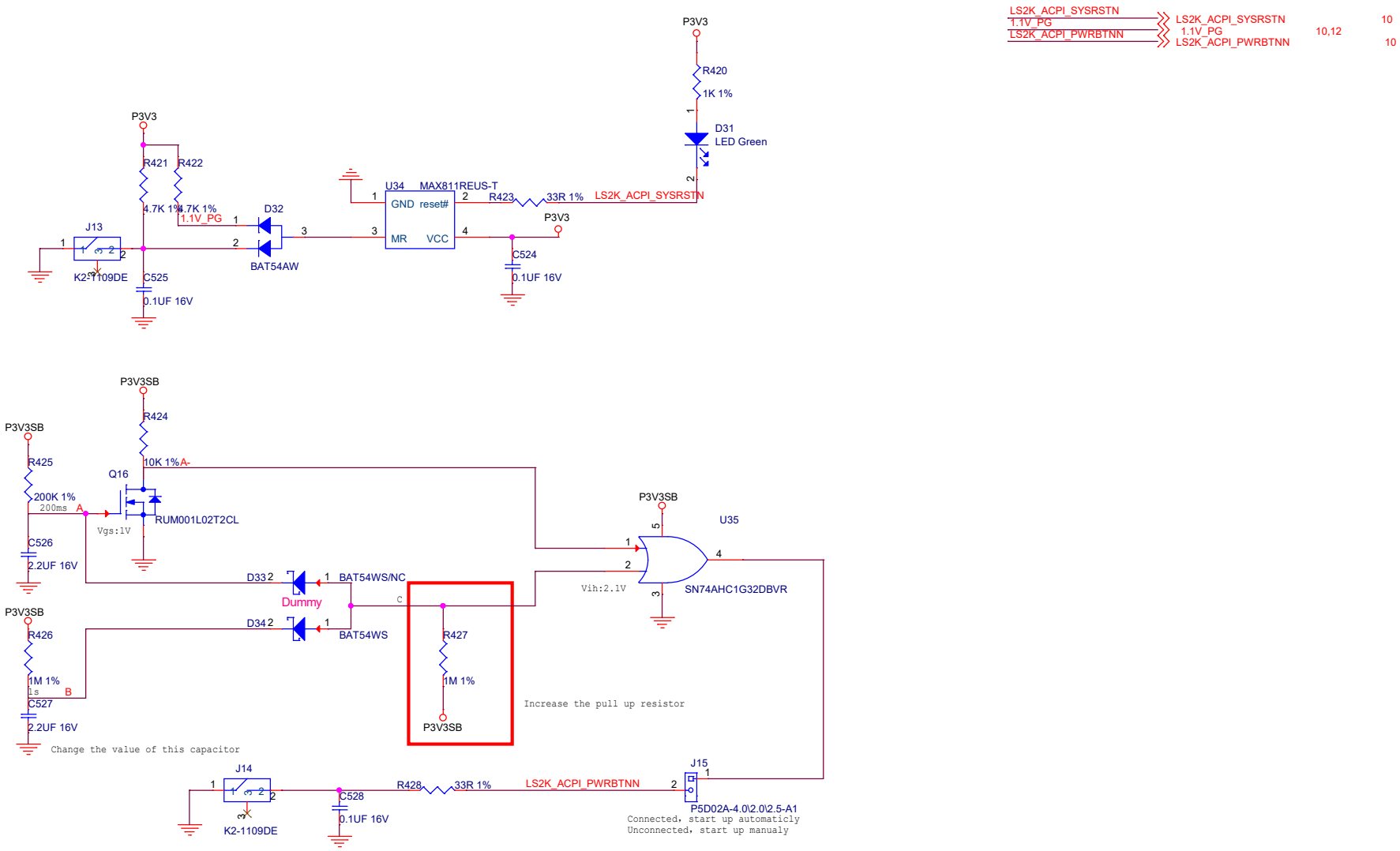

米联客	MILIANKE
www.milianke.com	LS01_2K1000
ProjectName: <Doc>	
Size: B	Page Title22_RESET	Rev: <RevCode>
Date: Wednesday, October 25, 2023	Sheet 22 of 24

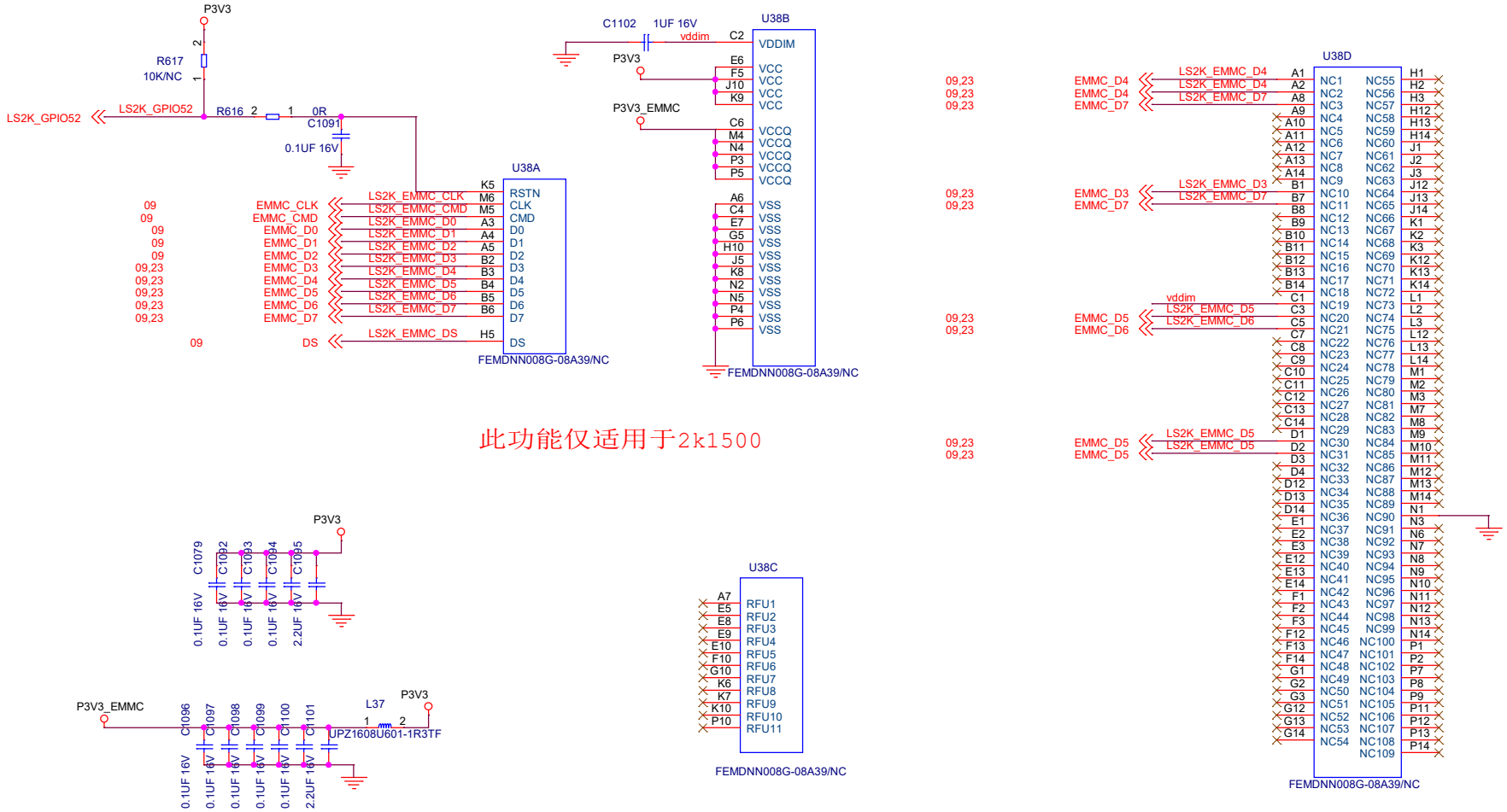

此功能仅适用于2k1500

其中NC引脚部分有连接表示在PCB中借用其引脚出线

米联客 MILIANKE	
www.milianke.com	LS01_2K1000
ProjectName: <Doc>	
Size: B / Page Title23_EMMC	Rev: <RevCode>
Date: Wednesday, October 25, 2023	Sheet 23 of 24

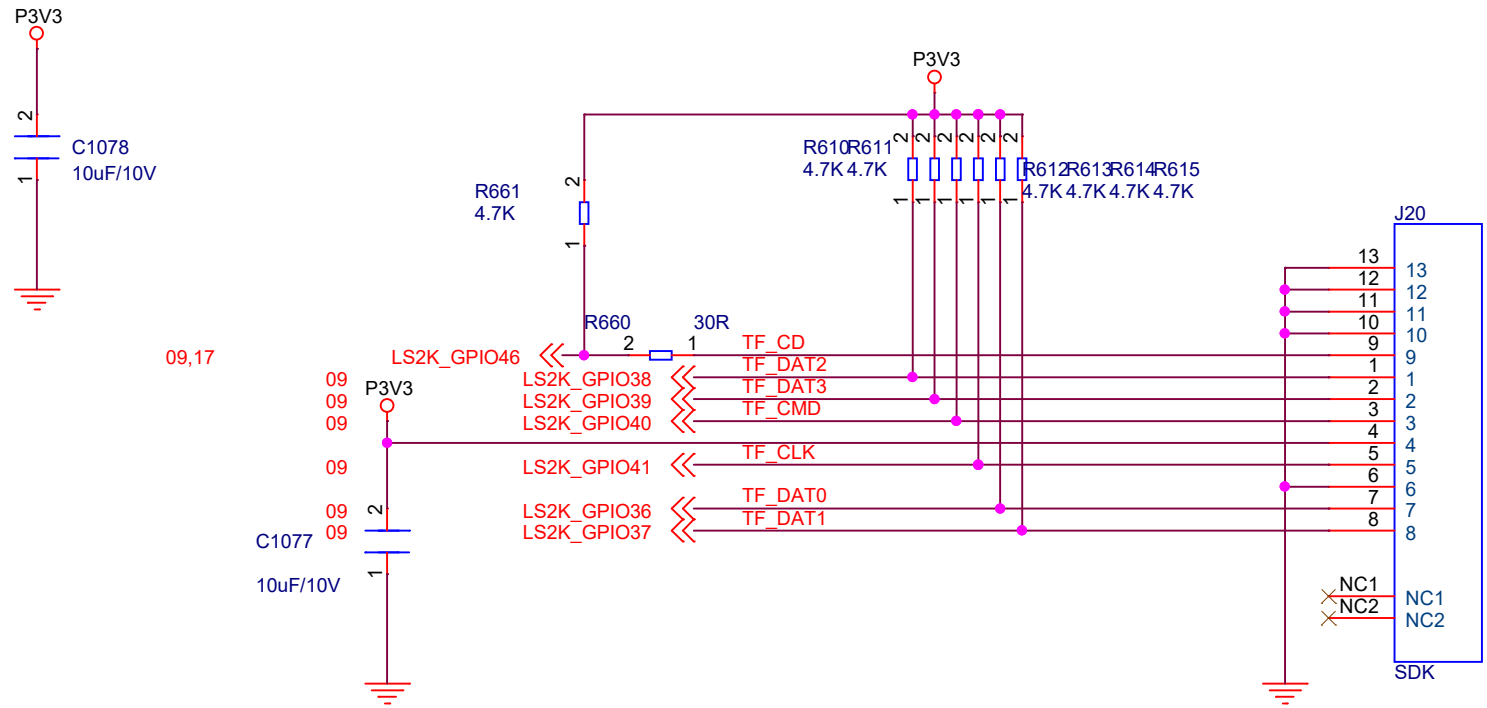

米联客 MILIANKE

www.milianke.com

LS01_2K1000

ProjectName:	<Doc>		
Size: A	Page Title24_TF	Rev:	<RevCode>
Date: Wednesday, October 25, 2023		Sheet 24	of 24