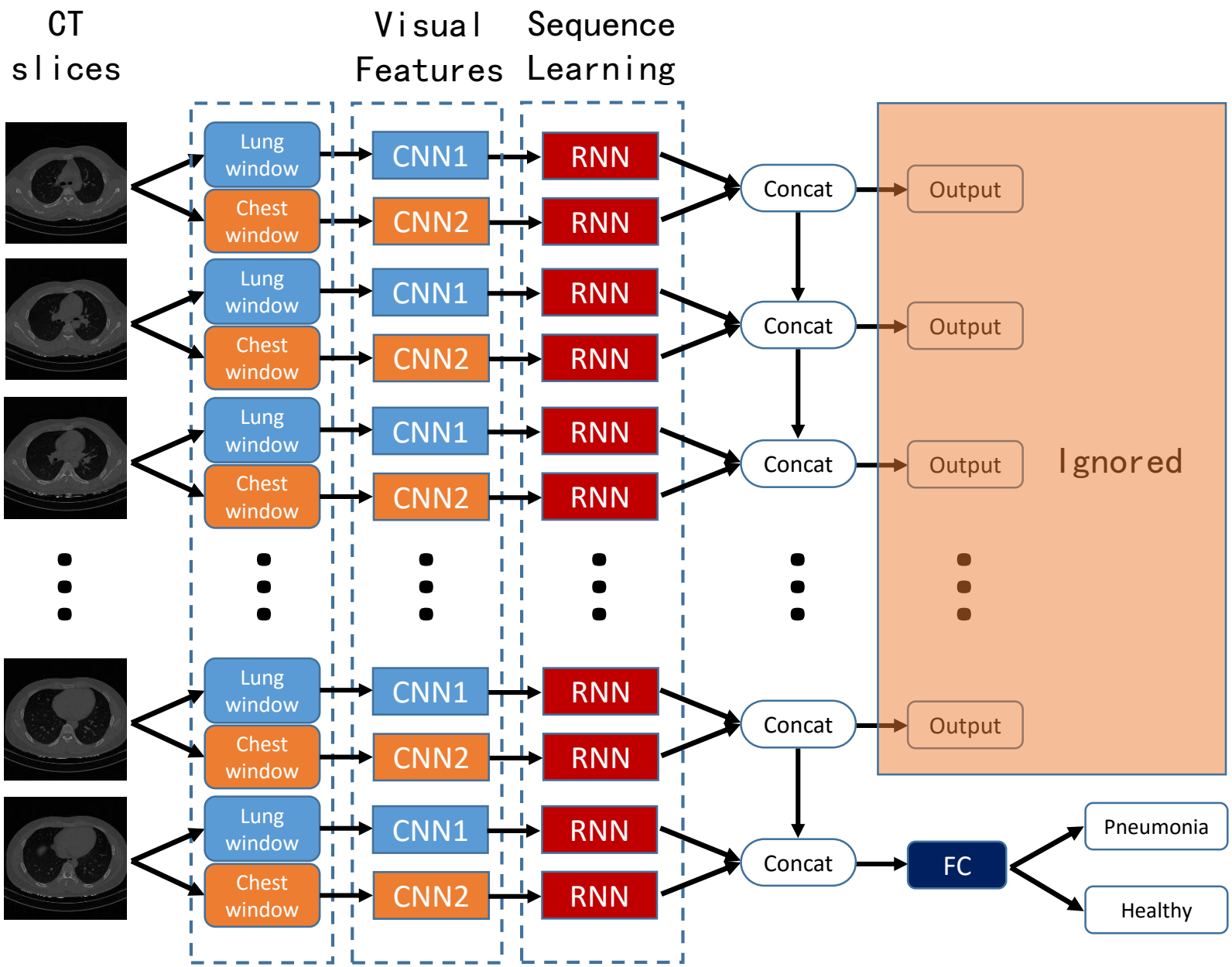
CT slices
Visual Features
Sequence Learning
Lung window
Chest window
CNN1
CNN2
RNN
Concat
Output
Ignored
FC
Pneumonia
Healthy