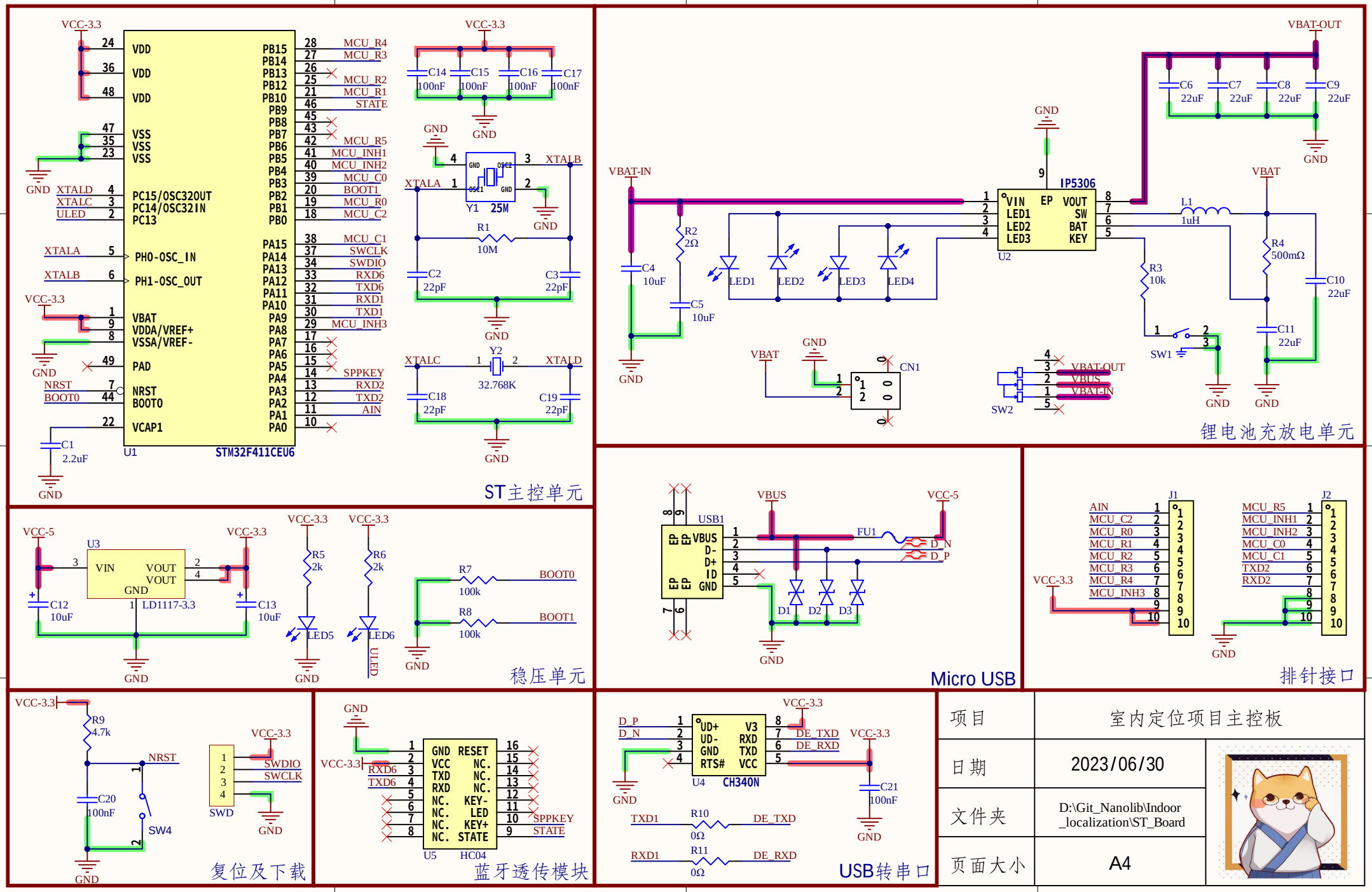
ST主控单元
STM32F411CEU6
U1
VDD
VSS
PC15/OSC32OUT
PC14/OSC32IN
PC13
PH0-OSC_IN
PH1-OSC_OUT
VBAT
VDDA/VREF+
VSSA/VREF-
PAD
NRST
BOOT0
VCAP1
PB15 PB14 PB13 PB12 PB10 PB9 PB8 PB7 PB6 PB5 PB4 PB3 PB2 PB1 PB0
PA15 PA14 PA13 PA12 PA11 PA10 PA9 PA8 PA7 PA6 PA5 PA4 PA3 PA2 PA1 PA0
MCU_R4 MCU_R3 MCU_R2 MCU_R1 STATE MCU_R5 MCU_INH1 MCU_INH2 MCU_C0 BOOT1 MCU_R0 MCU_C2 MCU_C1 SWCLK SWDIO RXD6 TXD6 RXD1 TXD1 MCU_INH3 SPPKEY RXD2 TXD2 AIN
XTALD XTALC ULED XTALA XTALB
VCC-3.3
C14 C15 C16 C17 100nF
Y1 25M
R1 10M
C2 C3 22pF
Y2 32.768K
C18 C19 22pF
C1 2.2uF
GND
锂电池充放电单元
IP5306
U2
VIN EP VOUT
LED1 SW
LED2 BAT
LED3 KEY
VBAT-IN
VBAT-OUT
VBAT
C4 10uF
C5 10uF
R2 2Ω
LED1 LED2 LED3 LED4
C6 C7 C8 C9 22uF
L1 1uH
R3 10k
R4 500mΩ
C10 22uF
C11 22uF
SW1
SW2
CN1
VBUS
稳压单元
U3
VIN VOUT
GND
LD1117-3.3
C12 10uF
C13 10uF
VCC-5
R5 2k
R6 2k
LED5 LED6
R7 100k
R8 100k
BOOT0
BOOT1
Micro USB
USB1
VBUS D- D+ ID GND
FU1
D_N D_P
D1 D2 D3
排针接口
J1
J2
AIN MCU_C2 MCU_R0 MCU_R1 MCU_R2 MCU_R3 MCU_R4 MCU_INH3
MCU_R5 MCU_INH1 MCU_INH2 MCU_C0 MCU_C1 TXD2 RXD2
复位及下载
R9 4.7k
C20 100nF
SW4
SWD
SWDIO SWCLK
蓝牙透传模块
U5 HC04
GND RESET VCC NC. TXD NC. RXD NC. NC. KEY- NC. LED NC. KEY+ NC. STATE
RXD6 TXD6 SPPKEY STATE
USB转串口
U4 CH340N
UD+ UD- GND RTS# V3 RXD TXD VCC
D_P D_N DE_TXD DE_RXD
C21 100nF
R10 0Ω
R11 0Ω
TXD1 RXD1
项目
室内定位项目主控板
日期
2023/06/30
文件夹
D:\Git_Nanolib\Indoor_localization\ST_Board
页面大小
A4