Level 1	Level 0	Current Level
H	H	No Current
H	L	Low Current 1/3
L	H	Medium Current 2/3
L	L	Maximum Current

Input Signal

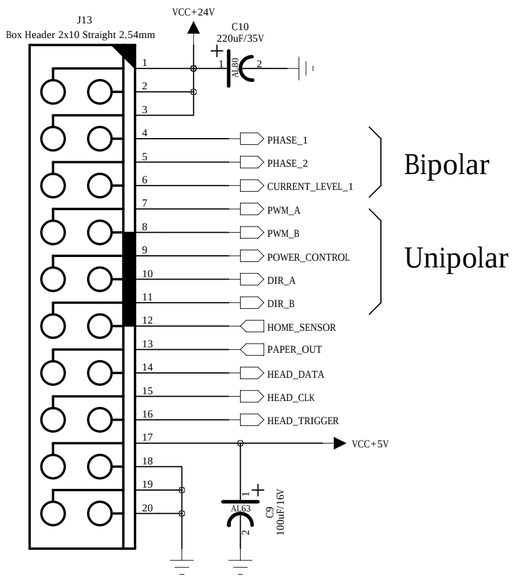

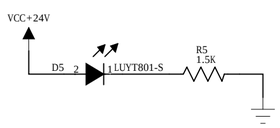

Head Trigger Generator

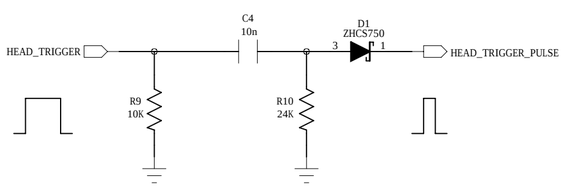

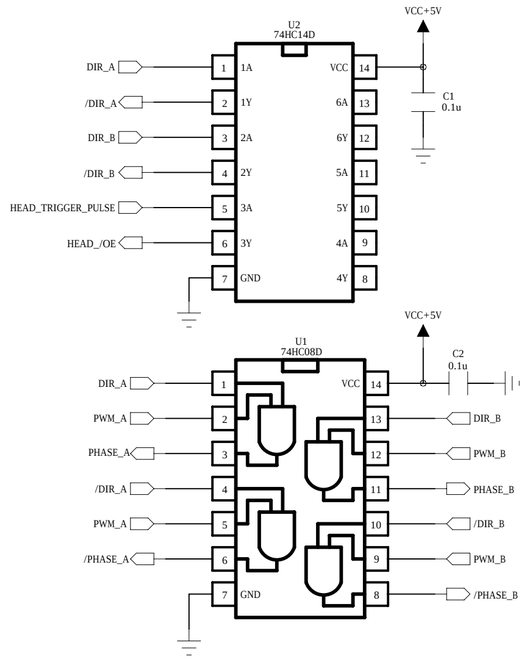

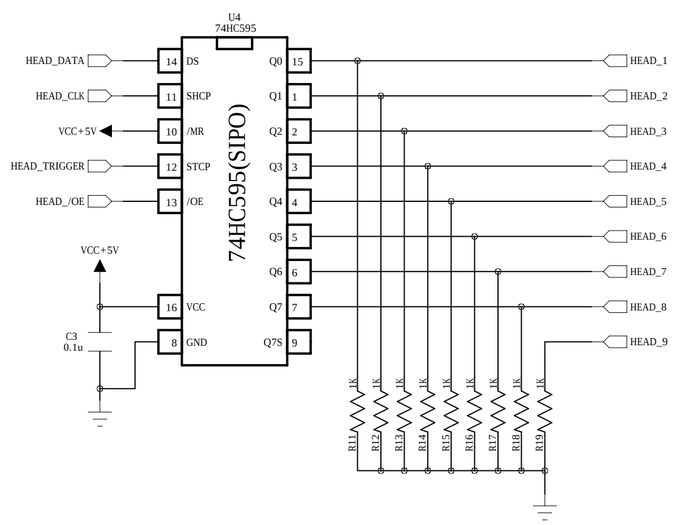

Output Signal

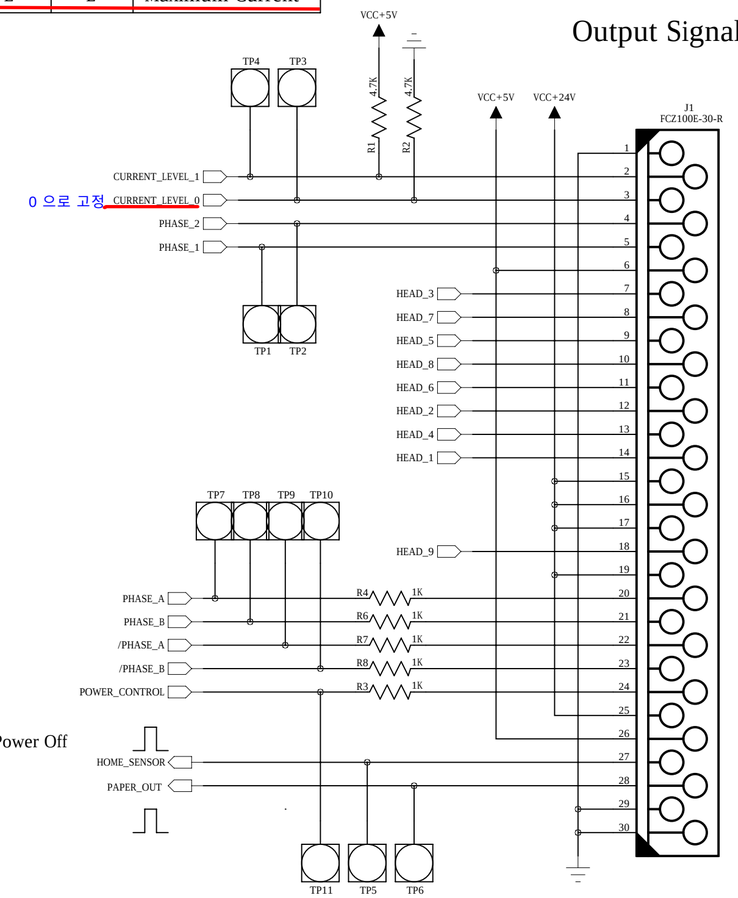

L : Power Off

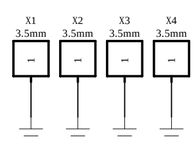

TITLE : Bipolar/Unipolar Step Motor Interface		
DRAWN BY :		
DATE : / /	REV :	SHEET :