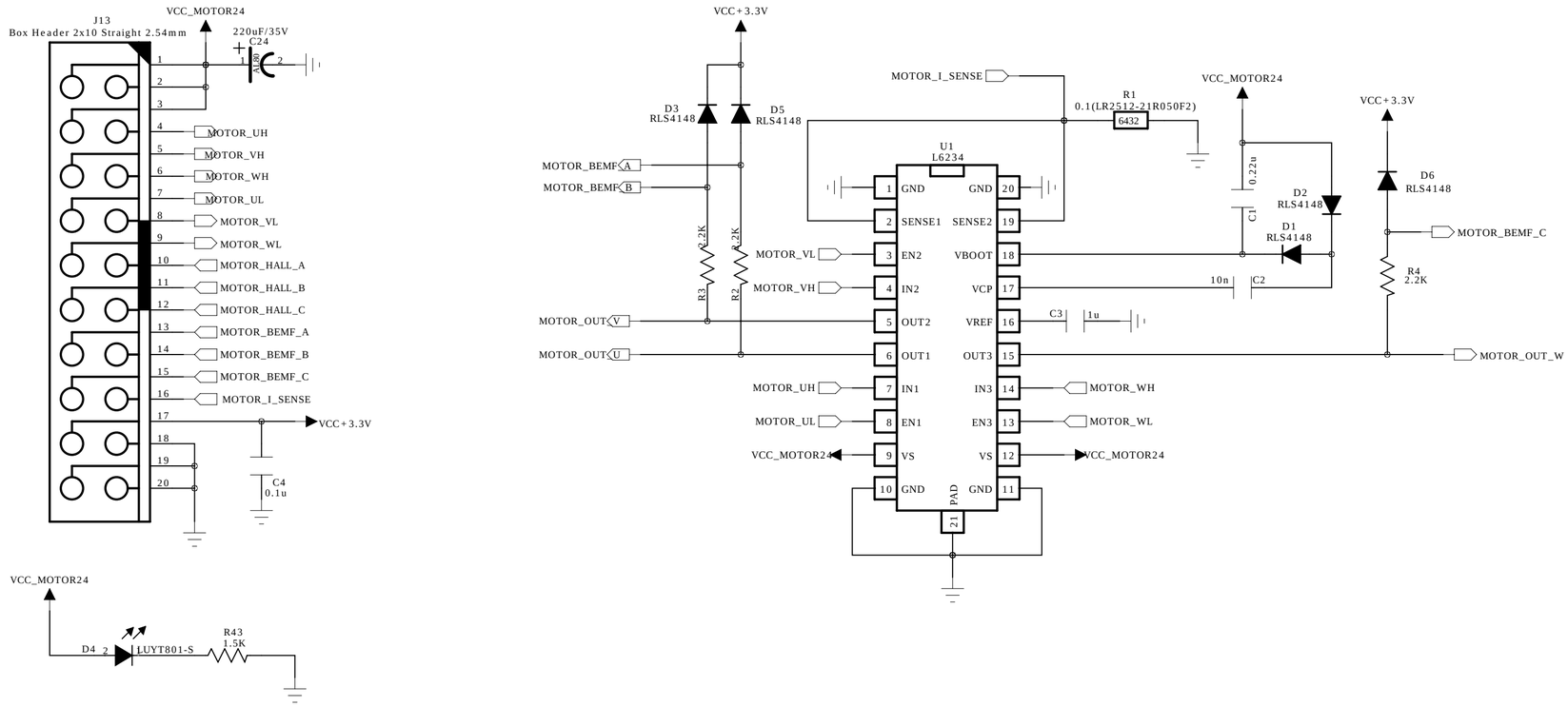

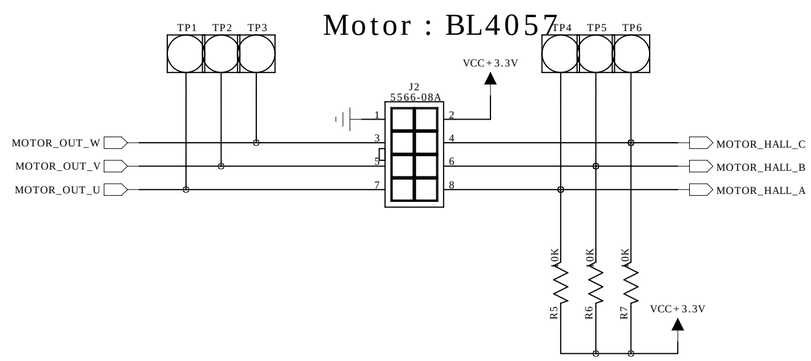

Motor : BL4057

Copper Thickness : 1 [OZ]

Pattern Width : 1.27mm - 3A
Pattern Width : 0.7mm - 2A
Pattern Width : 0.25mm - 1A

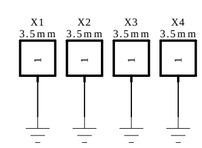

TITLE : Sensored BLDC		
DRAWN BY :		
DATE : / /	REV :	SHEET :