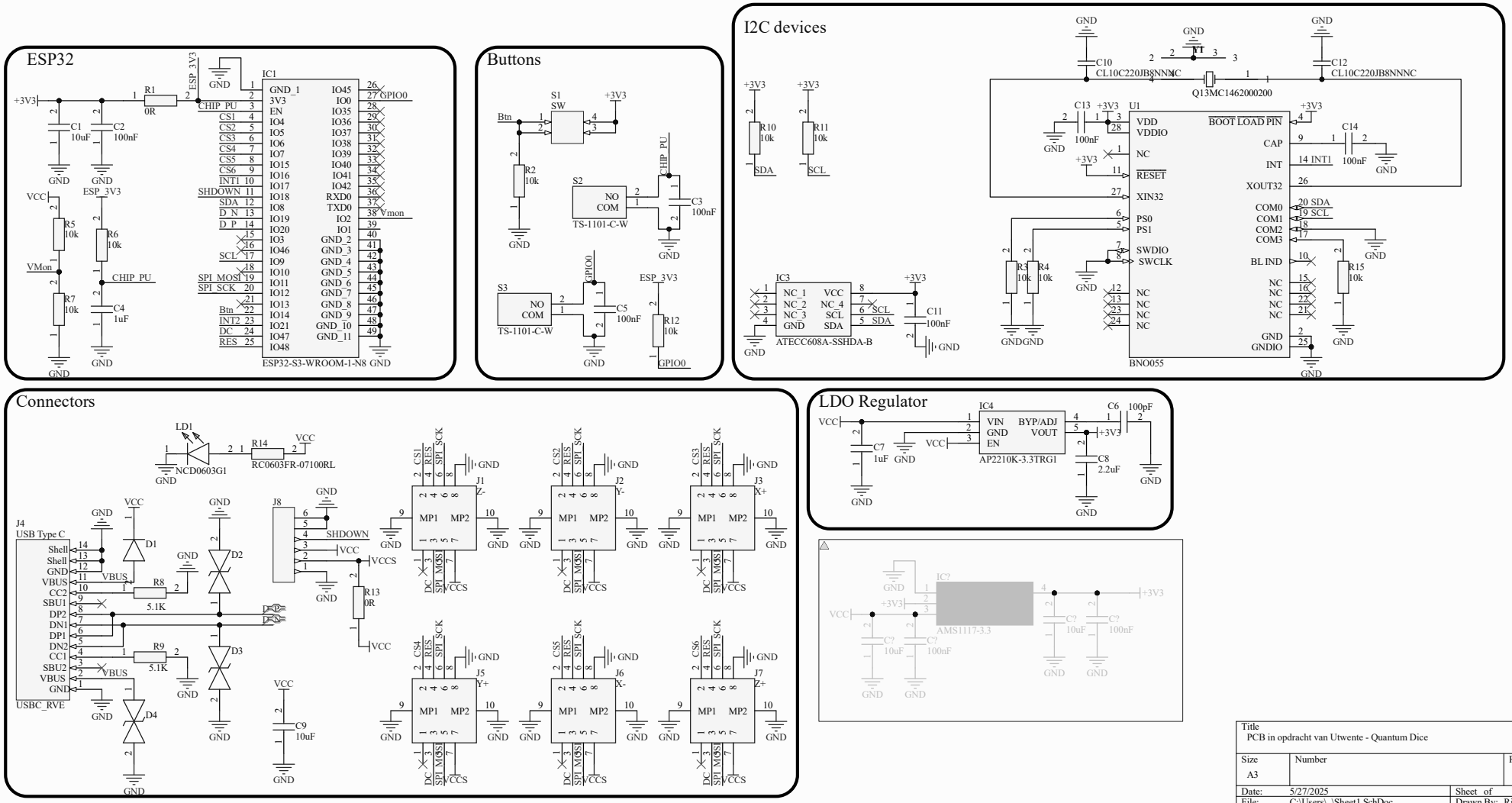

Title	PCB in opdracht van Utwente - Quantum Dice	
Size A3	Number	Revision V3.1
Date: 5/27/2025		Sheet of
File: C:\Users\..\Sheet1.SchDoc		Drawn By: Rink Visser